THE DATASHEET OF

SS2003M-TL-E

www.win-source.net 0086-755-83957316

Ordering number : EN8345B

SS2003M

Schottky Barrier Diode
30V, 2.0A, Low VF, Single MCPH6

ON Semiconductor®

http://onsemi.com

DISCONTINUED
THIS DEVICE IS NOT RECOMMENDED FOR NEW DESIGN
PLEASE CONTACT YOUR onsemi
REPRESENTATIVE FOR INFORMATION

Applications

- High frequency rectification (switching regulators, converters, choppers)
- Halogen free compliance

Features

- Small Switching noise
- Low forward voltage (I_F=2A, V_F max=0.40V)
- Small package permitting applied sets to be small and slim

Specifications

Absolute Maximum Ratings at Ta=25°C

Parameter	Symbol	Conditions	Ratings	Unit
Repetitive Peak Reverse Voltage	V_{RRM}		30	V
Nonrepetitive Peak Reverse Surge Voltage	V_{RSM}		30	V
Average Output Current	I_O		2.0	A
Surge Forward Current	I_{FSM}	50Hz sine wave, 1 cycle	10	A
Junction Temperature	T_j		–55 to +125	°C
Storage Temperature	T_{stg}		–55 to +125	°C

Stresses exceeding Maximum Ratings may damage the device. Maximum Ratings are stress ratings only. Functional operation above the Recommended Operating Conditions is not implied. Extended exposure to stresses above the Recommended Operating Conditions may affect device reliability.

Package Dimensions

unit : mm (typ)
7022[illegible]014

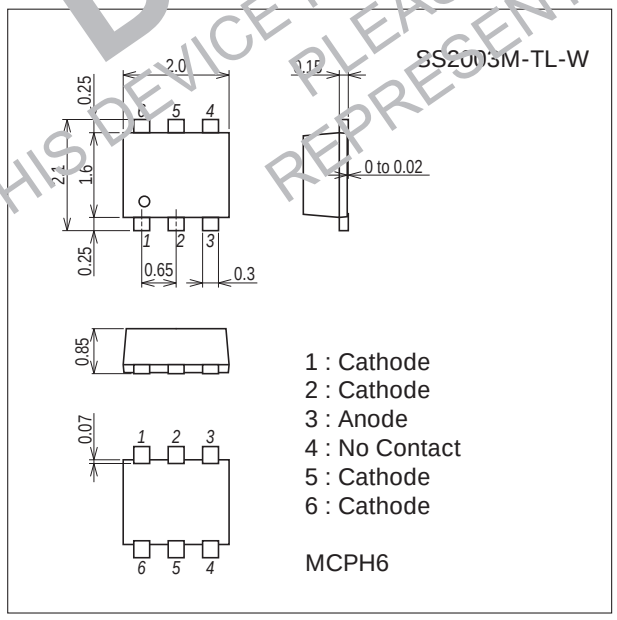

Ordering & Package Information

Device	Package	Shipping	memo
SS2003M-TL-W	MCPH6 SC-88, SC-70-6, SOT-363	3,000 pcs./reel	Pb-Free and Halogen Free

Packing Type : TL

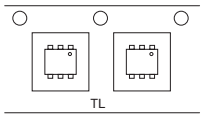

Marking

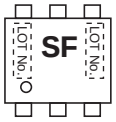

Electrical Connection

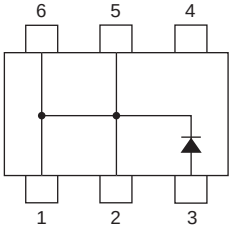

Electrical Characteristics at Ta=25°C

Parameter	Symbol	Conditions	Ratings			Unit
			min	typ	max	
Reverse Voltage	V_R	I_R=2.0mA	30			V
Forward Voltage	V_F	I_F=1.0A		0.30	0.35	V
		I_F=2.0A		0.35	0.40	V
Reverse Current	I_R	V_R=15V			1.25	mA
Interterminal Capacitance	C	V_R=10V, f=1MHz		75		pF
Reverse Recovery Time	t_{rr}	I_F=I_R=100mA, See specified Test Circuit.			20	ns
Thermal Resistance	Rth(j-a)1	When mounted in Cu-foiled area of 1.44mm^2×0.03mm on glass epoxy substrate		93.4		°C / W
	Rth(j-a)2	When mounted on ceramic substrate (500mm^2×0.8mm)		71.4		°C / W

t_{rr} Test Cicuit

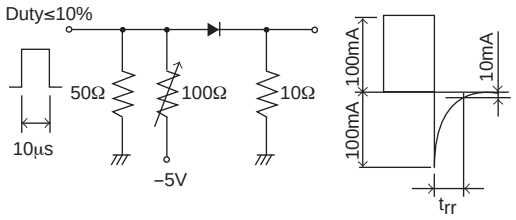

DISCONTINUED
THIS DEVICE IS NOT RECOMMENDED FOR NEW DESIGN
PLEASE CONTACT YOUR onsemi
REPRESENTATIVE FOR INFORMATION

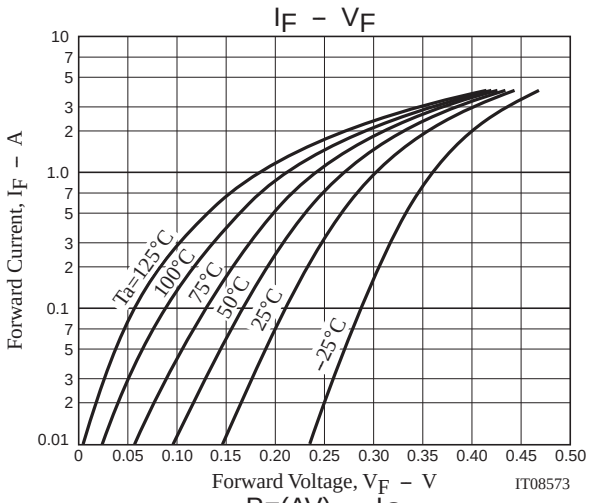

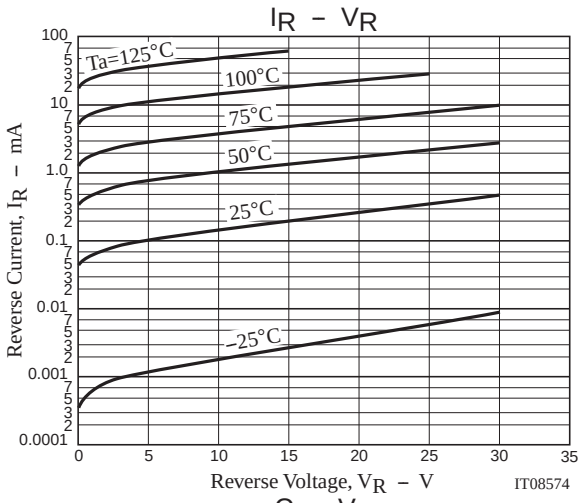

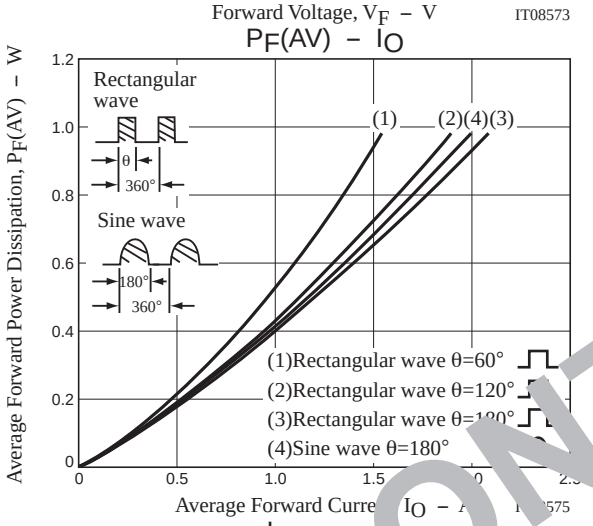

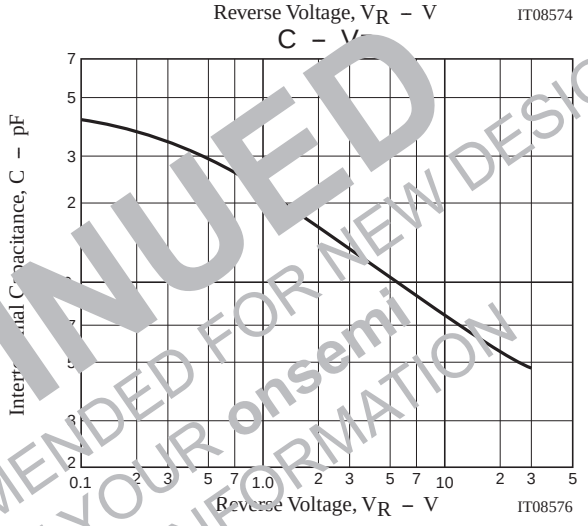

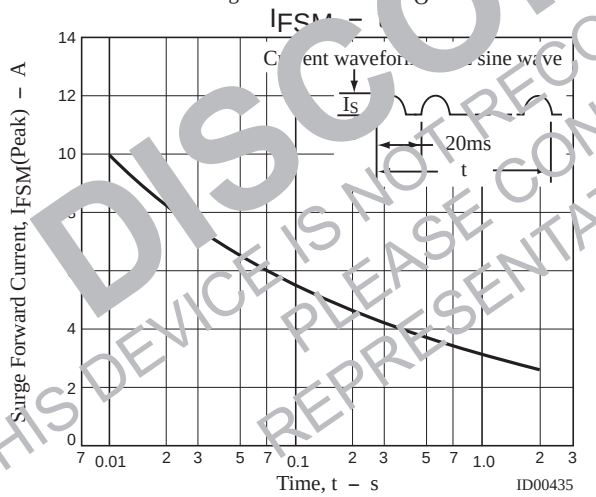

DISCONTINUED
THIS DEVICE IS NOT RECOMMENDED FOR NEW DESIGN
PLEASE CONTACT YOUR onsemi
REPRESENTATIVE FOR INFORMATION

Outline Drawing

SS2003M-TL-W

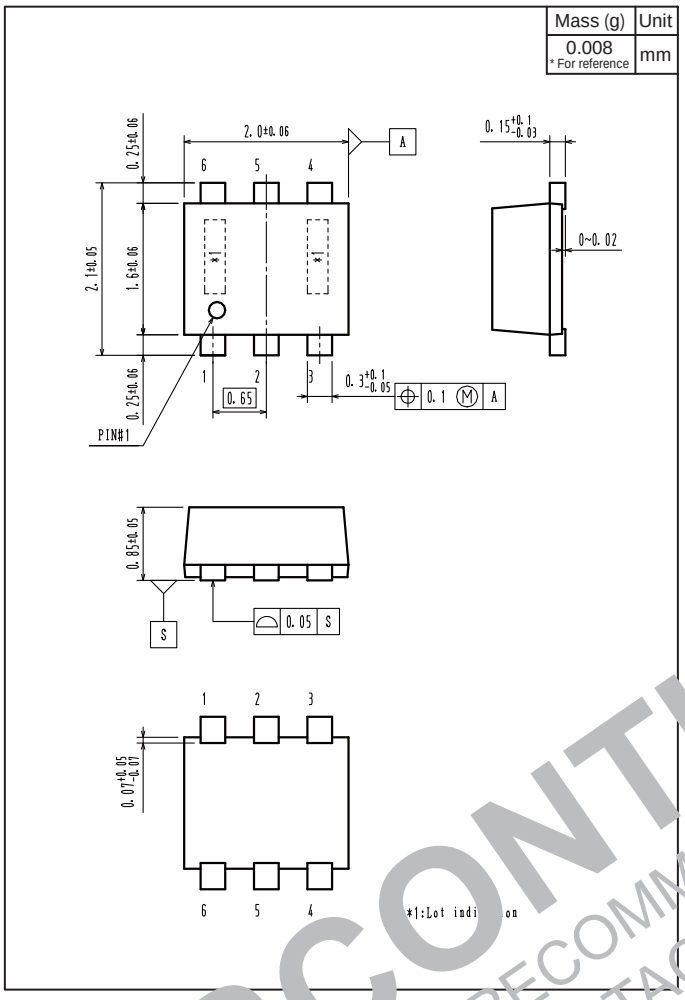

Land Pattern Example

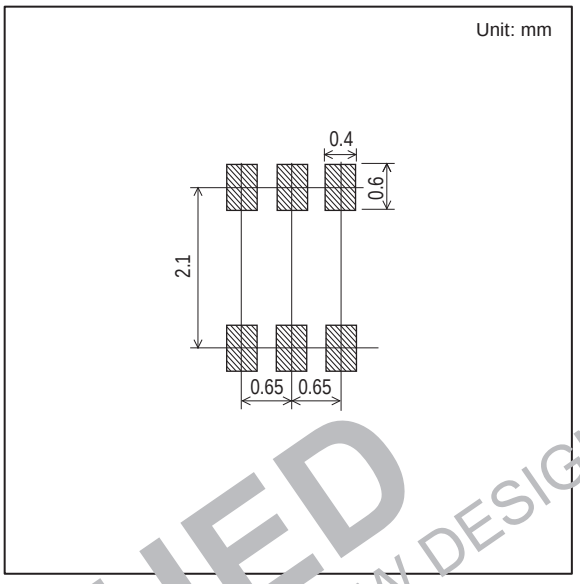

DISCONTINUED
THIS DEVICE IS NOT RECOMMENDED FOR NEW DESIGN
PLEASE CONTACT YOUR onsemi
REPRESENTATIVE FOR INFORMATION

DISCONTINUED
THIS DEVICE IS NOT RECOMMENDED FOR NEW DESIGN
PLEASE CONTACT YOUR onsemi
REPRESENTATIVE FOR INFORMATION

ON Semiconductor and the ON logo are registered trademarks of Semiconductor Components Industries, LLC (SCILLC). SCILLC owns the rights to a number of patents, trademarks, copyrights, trade secrets, and other intellectual property. A listing of SCILLC's product/patent coverage may be accessed at www.onsemi.com/site/pdf/Patent-Marking.pdf. SCILLC reserves the right to make changes without further notice to any products herein. SCILLC makes no warranty, representation or guarantee regarding the suitability of its products for any particular purpose, nor does SCILLC assume any liability arising out of the application or use of any product or circuit, and specifically disclaims any and all liability, including without limitation special, consequential or incidental damages. "Typical" parameters which may be provided in SCILLC data sheets and/or specifications can and do vary in different applications and actual performance may vary over time. All operating parameters, including "Typicals" must be validated for each customer application by customer's technical experts. SCILLC does not convey any license under its patent rights nor the rights of others. SCILLC products are not designed, intended, or authorized for use as components in systems intended for surgical implant into the body, or other applications intended to support or sustain life, or for any other application in which the failure of the SCILLC product could create a situation where personal injury or death may occur. Should Buyer purchase or use SCILLC products for any such unintended or unauthorized application, Buyer shall indemnify and hold SCILLC and its officers, employees, subsidiaries, affiliates, and distributors harmless against all claims, costs, damages, and expenses, and reasonable attorney fees arising out of, directly or indirectly, any claim of personal injury or death associated with such unintended or unauthorized use, even if such claim alleges that SCILLC was negligent regarding the design or manufacture of the part. SCILLC is an Equal Opportunity/Affirmative Action Employer. This literature is subject to all applicable copyright laws and is not for resale in any manner.

Looking for pricing, stock, or lifecycle information?

Click below to explore more details on WIN SOURCE:

- View SS2003M-TL-E on WIN SOURCE
- ON Semiconductor Information

Optimize Your Supply Chain with WIN SOURCE Solutions

- Global Sourcing Solution
- Obsolete Management
- Cost Control Management
- Shortage Management
- Alternative Solution
- Excess Inventory Management