THE DATASHEET OF

SN74LVC16373ADGGR

www.win-source.net 0086-755-83957316

SN74LVC16373A 16-Bit Transparent D-Type Latch With 3-State Outputs

1 Features

- Member of the Texas Instruments Widebus™ Family
- Operates From 1.65 V to 3.6 V
- Inputs Accept Voltages to 5.5 V
- Max t_{pd} of 4.2 ns at 3.3 V
- Typical V_{OLP} (Output Ground Bounce) <0.8 V at V_{CC} = 3.3 V, T_A = 25°C
- Typical V_{OHV} (Output V_{OH} Undershoot) >2 V at V_{CC} = 3.3 V, T_A = 25°C
- I_{off} Supports Live-Insertion, Partial-Power-Down Mode, and Back-Drive Protection
- Supports Mixed-Mode Signal Operation (5-V Input and Output Voltages With 3.3-V V_{CC})
- Latch-Up Performance Exceeds 100 mA Per JESD 78, Class II
- ESD Protection Exceeds JESD 22
  - 2000-V Human-Body Model (A114-A)
  - 1000-V Charged-Device Model (C101)

2 Applications

- Servers
- PCs and Notebooks
- Network Switches
- Wearable Health and Fitness Devices
- Telecom Infrastructures
- Electronic Points of Sale

3 Description

The SN74LVC16373A device is a 16-bit transparent D-type latch which is designed for 1.65-V to 3.6-V V_{CC} operation.

Device Information(1)

PART NUMBER	PACKAGE	BODY SIZE (NOM)
SN74LVC16373A	TSSOP (48)	12.50 mm × 6.10 mm
	TVSOP (48)	9.70 mm × 4.40 mm
	SSOP (48)	15.80 mm × 7.49 mm
	BGA MICROSTAR JUNIOR (56)	7.00 mm × 4.50 mm
	BGA MICROSTAR JUNIOR (54)	8.00 mm × 5.50 mm

(1) For all available packages, see the orderable addendum at the end of the data sheet.

4 Simplified Schematic

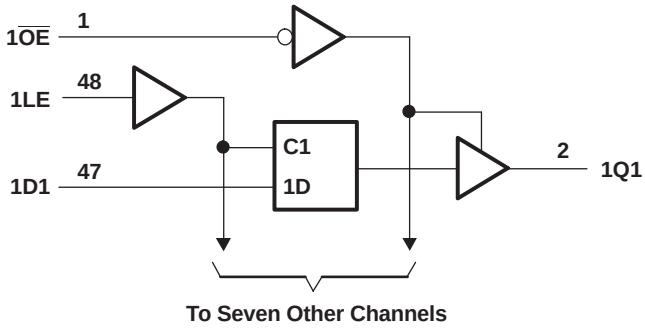

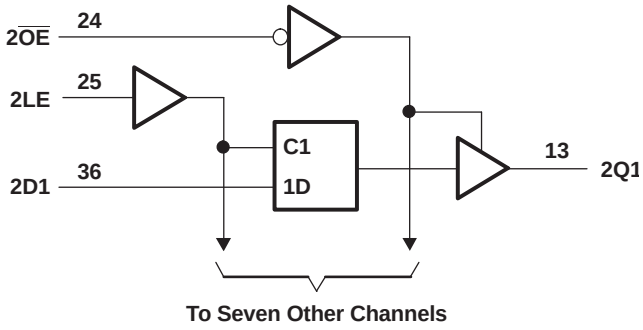

Pin numbers shown are for the DGG, DGV, and DL packages.

An IMPORTANT NOTICE at the end of this data sheet addresses availability, warranty, changes, use in safety-critical applications, intellectual property matters and other important disclaimers. PRODUCTION DATA.

Table of Contents

1 Features ... 1
2 Applications ... 1
3 Description ... 1
4 Simplified Schematic ... 1
5 Revision History ... 2
6 Pin Configuration and Functions ... 3
7 Specifications ... 6
7.1 Absolute Maximum Ratings ... 6
7.2 Handling Ratings ... 6
7.3 Recommended Operating Conditions ... 7
7.4 Thermal Information ... 7
7.5 Electrical Characteristics ... 8
7.6 Timing Requirements ... 8
7.7 Switching Characteristics ... 8
7.8 Operating Characteristics ... 8
7.9 Typical Characteristics ... 9
8 Parameter Measurement Information ... 10
9 Detailed Description ... 11
9.1 Overview ... 11
9.2 Functional Block Diagram ... 11
9.3 Feature Description ... 11
9.4 Device Functional Modes ... 11
10 Application and Implementation ... 12
10.1 Application Information ... 12
10.2 Typical Application ... 12
11 Power Supply Recommendations ... 13
12 Layout ... 13
12.1 Layout Guidelines ... 13
12.2 Layout Example ... 13
13 Device and Documentation Support ... 14
13.1 Trademarks ... 14
13.2 Electrostatic Discharge Caution ... 14
13.3 Glossary ... 14
14 Mechanical, Packaging, and Orderable Information ... 14

5 Revision History

NOTE: Page numbers for previous revisions may differ from page numbers in the current version.

Changes from Revision A (September 2005) to Revision B	Page
• Updated document to new TI data sheet format.	1
• Removed Ordering Information table.	1
• Added Applications.	1
• Added Device Information table.	1
• Added Handling Ratings table.	6
• Changed MAX ambient temperature to 125°C.	7
• Added Thermal Information table.	7
• Added Typical Characteristics.	9

Copyright © 2003–2014, Texas Instruments Incorporated

6 Pin Configuration and Functions

DGG, DGV, OR DL PACKAGE
(TOP VIEW)

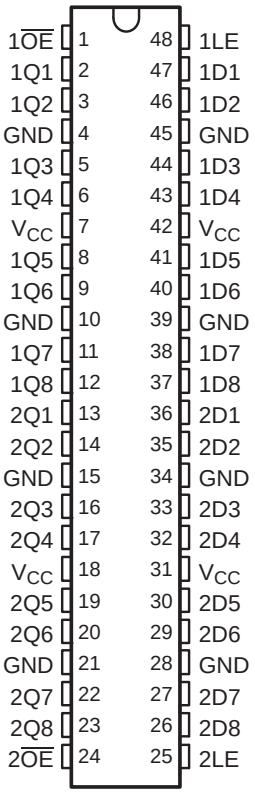

Pin Functions

PIN		I/O	DESCRIPTION
NO.	NAME		
1	$\overline{OE}$	I	Output Enable
2	1Q1	O	1Q1 Output
3	1Q2	O	1Q2 Output
4	GND	—	Ground Pin
5	1Q3	O	1Q3 Output
6	1Q4	O	1Q4 Output
7	VCC	—	Power Pin
8	1Q5	O	1Q5 Output
9	1Q6	O	1Q6 Output
10	GND	—	Ground Pin
11	1Q7	O	1Q7 Output
12	1Q8	O	1Q8 Output
13	2Q1	O	2Q1 Output
14	2Q2	O	2Q2 Output
15	GND	—	Ground Pin
16	2Q3	O	2Q3 Output
17	2Q4	O	2Q4 Output
18	VCC	—	Power Pin
19	2Q5	O	2Q5 Output
20	2Q6	O	2Q6 Output

Copyright © 2003–2014, Texas Instruments Incorporated

Pin Functions (continued)

PIN		I/O	DESCRIPTION
NO.	NAME		
21	GND	—	Ground Pin
22	2Q7	O	2Q7 Output
23	2Q8	O	2Q8 Output
24	$2\overline{OE}$	O	Output Enable 2
25	2LE	I	Latch Enable 2
26	2D8	I	2D8 Input
27	2D7	I	2D7 Input
28	GND	—	Ground Pin
29	2D6	I	2D6 Input
30	2D5	I	2D5 Input
31	VCC	—	Power Pin
32	2D4	I	2D4 Input
33	2D3	I	2D3 Input
34	GND	—	Ground Pin
35	2D2	I	2D2 Input
36	2D1	I	2D1 Input
37	1D8	I	1D8 Input
38	1D7	I	1D7 Input
39	GND	—	Ground Pin
40	1D6	I	1D6 Input
41	1D5	I	1D5 Input
42	VCC	—	Power Pin
43	1D4	I	1D4 Input
44	1D3	I	1D3 Input
45	GND	—	Ground Pin
46	1D2	I	1D2 Input
47	1D1	I	1D1 Input
48	1LE	I	Latch Enable 1

Copyright © 2003–2014, Texas Instruments Incorporated

GQL OR ZQL PACKAGE
(TOP VIEW)

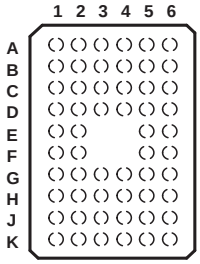

Pin Assignments[(1)] (56-Ball GQL or ZQL Package)

	1	2	3	4	5	6
A	$1\overline{OE}$	NC	NC	NC	NC	1LE
B	1Q2	1Q1	GND	GND	1D1	1D2
C	1Q4	1Q3	V_{CC}	V_{CC}	1D3	1D4
D	1Q6	1Q5	GND	GND	1D5	1D6
E	1Q8	1Q7			1D7	1D8
F	2Q1	2Q2			2D2	2D1
G	2Q3	2Q4	GND	GND	2D4	2D3
H	2Q5	2Q6	V_{CC}	V_{CC}	2D6	2D5
J	2Q7	2Q8	GND	GND	2D8	2D7
K	$2\overline{OE}$	NC	NC	NC	NC	2LE

(1) NC – No internal connection

GRD OR ZRD PACKAGE
(TOP VIEW)

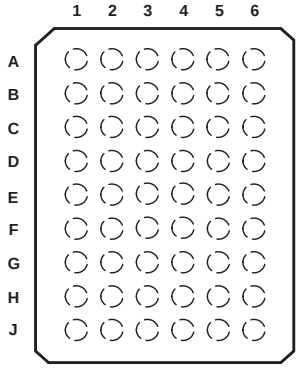

Pin Assignments[(1)] (54-Ball GRD or ZRD Package)

	1	2	3	4	5	6
A	1Q1	NC	$1\overline{OE}$	1LE	NC	1D1
B	1Q3	1Q2	NC	NC	1D2	1D3
C	1Q5	1Q4	V_{CC}	V_{CC}	1D4	1D5
D	1Q7	1Q6	GND	GND	1D6	1D7
E	2Q1	1Q8	GND	GND	1D8	2D1
F	2Q3	2Q2	GND	GND	2D2	2D3
G	2Q5	2Q4	V_{CC}	V_{CC}	2D4	2D5
H	2Q7	2Q6	NC	NC	2D6	2D7
J	2Q8	NC	$2\overline{OE}$	2LE	NC	2D8

(1) NC – No internal connection

Copyright © 2003–2014, Texas Instruments Incorporated

7 Specifications

7.1 Absolute Maximum Ratings

over operating free-air temperature range (unless otherwise noted)[1]

			MIN	MAX	UNIT
V_{CC}	Supply voltage range		–0.5	6.5	V
V_I	Input voltage range[2]		–0.5	6.5	V
V_O	Voltage range applied to any output in the high-impedance or power-off state[2]		–0.5	6.5	V
V_O	Voltage range applied to any output in the high or low state[2][3]		–0.5	V_{CC} + 0.5	V
I_{IK}	Input clamp current	$V_I < 0$		–50	mA
I_{OK}	Output clamp current	$V_O < 0$		–50	mA
I_O	Continuous output current			±50	mA
	Continuous current through each V_{CC} or GND			±100	mA

(1) Stresses beyond those listed under *Absolute Maximum Ratings* may cause permanent damage to the device. These are stress ratings only, and functional operation of the device at these or any other conditions beyond those indicated under *Recommended Operating Conditions* is not implied. Exposure to absolute-maximum-rated conditions for extended periods may affect device reliability.
(2) The input negative-voltage and output voltage ratings may be exceeded if the input and output current ratings are observed.
(3) The value of V_{CC} is provided in the *Recommended Operating Conditions* table.

7.2 Handling Ratings

			MIN	MAX	UNIT
T_{stg}	Storage temperature range		–65	150	°C
$V_{(ESD)}$	Electrostatic discharge	Human body model (HBM), per ANSI/ESDA/JEDEC JS-001, all pins[1]	0	2000	V
		Charged device model (CDM), per JEDEC specification JESD22-C101, all pins[2]	0	1000	

(1) JEDEC document JEP155 states that 500-V HBM allows safe manufacturing with a standard ESD control process.
(2) JEDEC document JEP157 states that 250-V CDM allows safe manufacturing with a standard ESD control process.

Copyright © 2003–2014, Texas Instruments Incorporated

7.3 Recommended Operating Conditions

over operating free-air temperature range (unless otherwise noted)[1]

			MIN	MAX	UNIT
V_{CC}	Supply voltage	Operating	1.65	3.6	V
		Data retention only	1.5		
V_{IH}	High-level input voltage	V_{CC} = 1.65 V to 1.95 V	0.65 × V_{CC}		V
		V_{CC} = 2.3 V to 2.7 V	1.7		
		V_{CC} = 2.7 V to 3.6 V	2		
V_{IL}	Low-level input voltage	V_{CC} = 1.65 V to 1.95 V		0.35 × V_{CC}	V
		V_{CC} = 2.3 V to 2.7 V		0.7	
		V_{CC} = 2.7 V to 3.6 V		0.8	
V_I	Input voltage		0	5.5	V
V_O	Output voltage	High or low state	0	V_{CC}	V
		High-impedance state	0	5.5	
I_{OH}	High-level output current	V_{CC} = 1.65 V		–4	mA
		V_{CC} = 2.3 V		–8	
		V_{CC} = 2.7 V		–12	
		V_{CC} = 3 V		–24	
I_{OL}	Low-level output current	V_{CC} = 1.65 V		4	mA
		V_{CC} = 2.3 V		8	
		V_{CC} = 2.7 V		12	
		V_{CC} = 3 V		24	
Δt/Δv	Input transition rise and fall rate			10	ns/V
T_A	Operating free-air temperature		–40	125	°C

(1) All unused inputs of the device must be held at V_{CC} or GND to ensure proper device operation. Refer to the TI application report, *Implications of Slow or Floating CMOS Inputs*, literature number SCBA004.

7.4 Thermal Information

THERMAL METRIC[1]		DL	UNIT
		48 PINS	
$R_{\theta JA}$	Junction-to-ambient thermal resistance	68.4	°C/W
$R_{\theta JC(top)}$	Junction-to-case (top) thermal resistance	34.7	
$R_{\theta JB}$	Junction-to-board thermal resistance	41.0	
ψ_{JT}	Junction-to-top characterization parameter	12.3	
ψ_{JB}	Junction-to-board characterization parameter	40.4	
$R_{\theta JC(bot)}$	Junction-to-case (bottom) thermal resistance	n/a	

(1) For more information about traditional and new thermal metrics, see the *IC Package Thermal Metrics* application report, SPRA953.

Copyright © 2003–2014, Texas Instruments Incorporated

7.5 Electrical Characteristics

over recommended operating free-air temperature range (unless otherwise noted)

PARAMETER	TEST CONDITIONS		V_{CC}	MIN	TYP(1)	MAX	UNIT
V_{OH}	I_{OH} = –100 µA		1.65 V to 3.6 V	V_{CC} – 0.2			V
	I_{OH} = –4 mA		1.65 V	1.2			
	I_{OH} = –8 mA		2.3 V	1.7			
	I_{OH} = –12 mA		2.7 V	2.2			
			3 V	2.4			
	I_{OH} = –24 mA		3 V	2.2			
V_{OL}	I_{OL} = 100 µA		1.65 V to 3.6 V			0.2	V
	I_{OL} = 4 mA		1.65 V			0.45	
	I_{OL} = 8 mA		2.3 V			0.7	
	I_{OL} = 12 mA		2.7 V			0.4	
	I_{OL} = 24 mA		3 V			0.55	
I_I	V_I = 0 to 5.5 V		3.6 V			±5	µA
I_{off}	V_I or V_O = 5.5 V		0			±10	µA
I_{OZ}	V_O = 0 to 5.5 V		3.6 V			±10	µA
I_{CC}	V_I = V_{CC} or GND	I_O = 0	3.6 V			20	µA
	3.6 V ≤ V_I ≤ 5.5 V(2)					20	
ΔI_{CC}	One input at V_{CC} – 0.6 V, Other inputs at V_{CC} or GND		2.7 V to 3.6 V			500	µA
C_i	V_I = V_{CC} or GND		3.3 V		5		pF
C_o	V_O = V_{CC} or GND		3.3 V		6.5		pF

(1) All typical values are at V_{CC} = 3.3 V, T_A = 25°C.
(2) This applies in the disabled state only.

7.6 Timing Requirements

over recommended operating free-air temperature range (unless otherwise noted) (see Figure 3)

		V_{CC} = 1.8 V ± 0.15 V		V_{CC} = 2.5 V ± 0.2 V		V_{CC} = 2.7 V		V_{CC} = 3.3 V ± 0.3 V		UNIT
		MIN	MAX	MIN	MAX	MIN	MAX	MIN	MAX	
t_w	Pulse duration, LE high	3.3		3.3		3.3		3.3		ns
t_{su}	Setup time, data before LE↓	1.6		1.2		1.7		1.7		ns
t_h	Hold time, data after LE↓	1		1.1		1.2		1.2		ns

7.7 Switching Characteristics

over recommended operating free-air temperature range (unless otherwise noted) (see Figure 3)

PARAMETER	FROM (INPUT)	TO (OUTPUT)	V_{CC} = 1.8 V ± 0.15 V		V_{CC} = 2.5 V ± 0.2 V		V_{CC} = 2.7 V		V_{CC} = 3.3 V ± 0.3 V		UNIT
			MIN	MAX	MIN	MAX	MIN	MAX	MIN	MAX	
t_{pd}	D	Q	1.5	6.4	1	4.2	1	4.9	1.6	4.2	ns
	LE		1.5	7.1	1	4.8	1	5.3	2.1	4.6	
t_{en}	$\overline{OE}$	Q	1.5	6.7	1	4.7	1	5.7	1.3	4.7	ns
t_{dis}	$\overline{OE}$	Q	1.5	8.4	1	5	1	6.3	2.5	5.9	ns

7.8 Operating Characteristics

T_A = 25°C

PARAMETER			TEST CONDITIONS	V_{CC} = 1.8 V	V_{CC} = 2.5 V	V_{CC} = 3.3 V	UNIT
				TYP	TYP	TYP	
C_{pd}	Power dissipation capacitance per latch	Outputs enabled	f = 10 MHz	32	35	39	pF
		Outputs disabled		4	4	6	

Copyright © 2003–2014, Texas Instruments Incorporated

7.9 Typical Characteristics

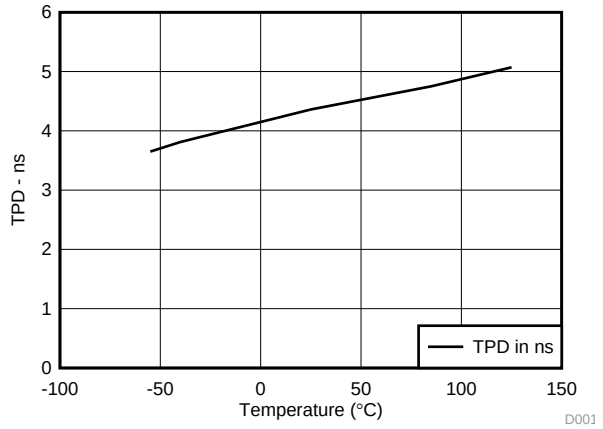

Figure 1. SN74LVC16373A LE to Q Across Temperature 3.3-V V_{CC}

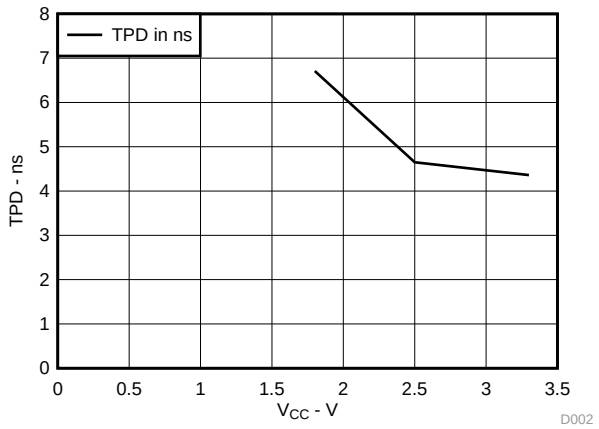

Figure 2. SN74LVC16373A LE to Q TDP V_{CC} vs TPD at 25°C

8 Parameter Measurement Information

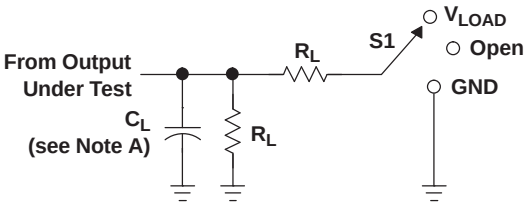

LOAD CIRCUIT

TEST	S1
t_{PLH}/t_{PHL}	Open
t_{PLZ}/t_{PZL}	V_{LOAD}
t_{PHZ}/t_{PZH}	GND

V_{CC}	INPUTS		V_M	V_{LOAD}	C_L	R_L	V_Δ
	V_I	t_r/t_f					
1.8 V ± 0.15 V	V_{CC}	≤2 ns	$V_{CC}/2$	$2 \times V_{CC}$	30 pF	1 kΩ	0.15 V
2.5 V ± 0.2 V	V_{CC}	≤2 ns	$V_{CC}/2$	$2 \times V_{CC}$	30 pF	500 Ω	0.15 V
2.7 V	2.7 V	≤2.5 ns	1.5 V	6 V	50 pF	500 Ω	0.3 V
3.3 V ± 0.3 V	2.7 V	≤2.5 ns	1.5 V	6 V	50 pF	500 Ω	0.3 V

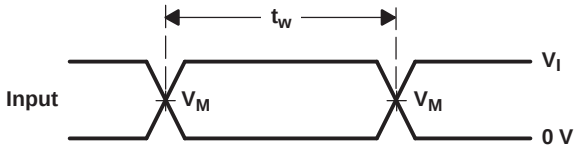

VOLTAGE WAVEFORMS
PULSE DURATION

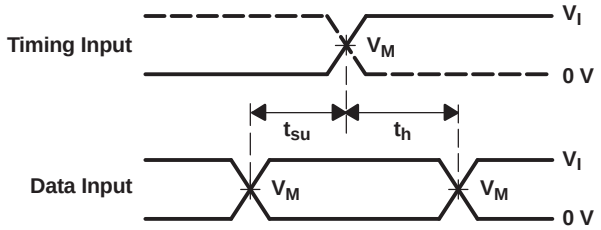

VOLTAGE WAVEFORMS
SETUP AND HOLD TIMES

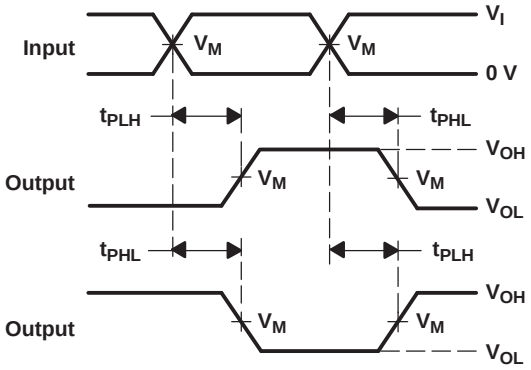

VOLTAGE WAVEFORMS
PROPAGATION DELAY TIMES
INVERTING AND NONINVERTING OUTPUTS

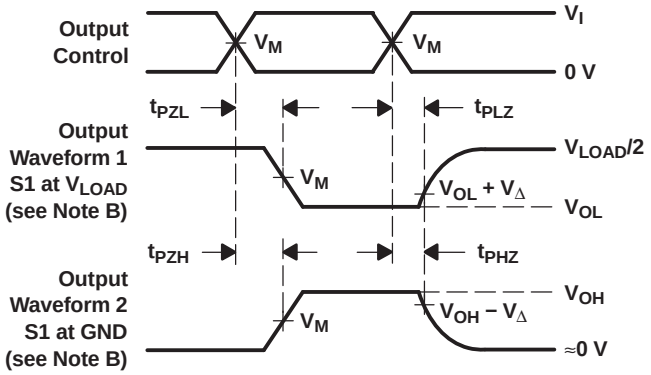

VOLTAGE WAVEFORMS
ENABLE AND DISABLE TIMES
LOW- AND HIGH-LEVEL ENABLING

NOTES:
A. C_L includes probe and jig capacitance.
B. Waveform 1 is for an output with internal conditions such that the output is low, except when disabled by the output control. Waveform 2 is for an output with internal conditions such that the output is high, except when disabled by the output control.
C. All input pulses are supplied by generators having the following characteristics: PRR ≤ 10 MHz, Z_O = 50 Ω.
D. The outputs are measured one at a time, with one transition per measurement.
E. t_{PLZ} and t_{PHZ} are the same as t_{dis}.
F. t_{PZL} and t_{PZH} are the same as t_{en}.
G. t_{PLH} and t_{PHL} are the same as t_{pd}.
H. All parameters and waveforms are not applicable to all devices.

Figure 3. Load Circuit and Voltage Waveforms

Copyright © 2003–2014, Texas Instruments Incorporated

9 Detailed Description

9.1 Overview

The SN74LVC16373A device is particularly suitable for implementing buffer registers, I/O ports, bidirectional bus drivers, and working registers. The device can be used as two 8-bit latches or one 16-bit latch. When the latch-enable (LE) input high, the Q outputs follow the data (D) inputs. When LE is taken low, the Q outputs are latched at the levels set up at the D inputs.

A buffered output-enable ($\overline{OE}$) input can be used to place the eight outputs in either a normal logic state (high or low logic levels) or the high-impedance state. In the high-impedance state, the outputs neither load nor drive the bus lines significantly. The high-impedance state and increased drive provide the capability to drive bus lines without interface or pullup components. $\overline{OE}$ does not affect internal operations of the latch. Old data can be retained or new data can be entered while the outputs are in the high-impedance state. Inputs can be driven from either 3.3-V or 5-V devices. This feature allows the use of this device as a translator in a mixed 3.3-V/5-V system environment. To ensure the high-impedance state during power up or power down, $\overline{OE}$ should be tied to V_{CC} through a pullup resistor; the minimum value of the resistor is determined by the current-sinking capability of the driver.

This device is fully specified for partial-power-down applications using I_{off}. The I_{off} circuitry disables the outputs, preventing damaging current backflow through the device when it is powered down.

9.2 Functional Block Diagram

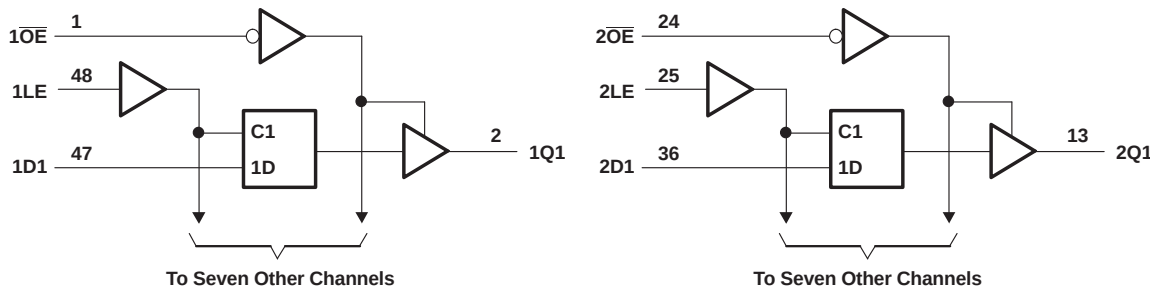

Pin numbers shown are for the DGG, DGV, and DL packages.

Figure 4. Logic Diagram (Positive Logic)

9.3 Feature Description

- Wide operating voltage range
  - Operates from 1.65 V to 3.6 V
- Allows down voltage translation
  - Inputs accept voltages to 5.5 V
- I_{off} feature
  - Allows voltages on the inputs and outputs when V_{CC} is 0 V

9.4 Device Functional Modes

Function Table (Each Latch)

INPUTS			OUTPUT
$\overline{OE}$	LE	D	Q
L	H	H	H
L	H	L	L
L	L	X	Q_0
H	X	X	Z

10 Application and Implementation

10.1 Application Information

The SN74LVC16373A device is a high drive CMOS device that can be used for a multitude of bus-interface type applications where the data needs to be retained or latched. It can produce 24 mA of drive current at 3.3 V. Therefore, this device is ideal for driving multiple outputs and for high speed applications up to 100 Mhz. The inputs are 5.5 V tolerant allowing it to translate down to V_{CC}.

10.2 Typical Application

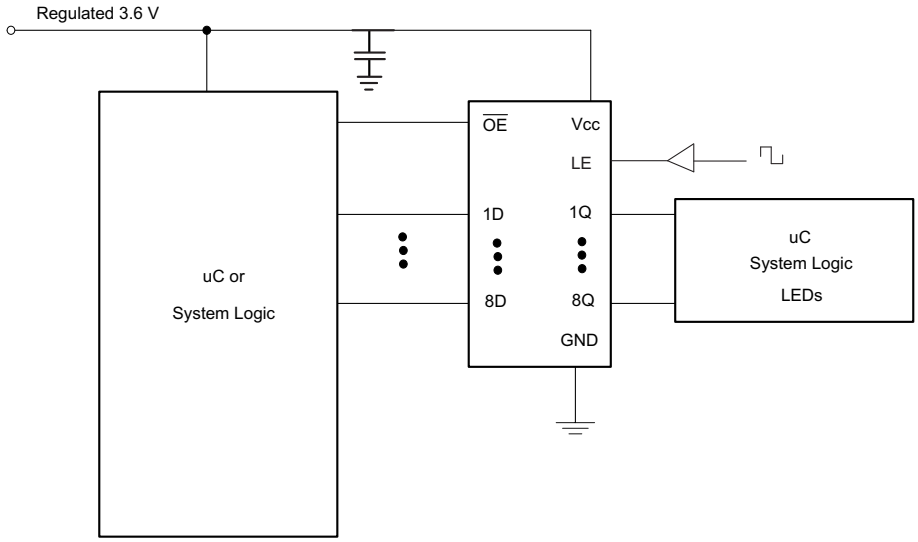

Figure 5. Typical Application Diagram

10.2.1 Design Requirements

This device uses CMOS technology and has balanced output drive. Care should be taken to avoid bus contention because it can drive currents that would exceed maximum limits. The high drive will also create fast edges into light loads; therefore, routing and load conditions should be considered to prevent ringing.

10.2.2 Detailed Design Procedure

1. Recommended Input Conditions
   - Rise time and fall time specs: See (Δt/ΔV) in the *Recommended Operating Conditions* table.
   - Specified high and low levels: See (V_{IH} and V_{IL}) in the *Recommended Operating Conditions* table.
   - Inputs are overvoltage tolerant allowing them to go as high as 5.5 V at any valid V_{CC}.
2. Recommend Output Conditions
   - Load currents should not exceed 50 mA per output and 100 mA total for the part.
   - Outputs should not be pulled above V_{CC}.

Copyright © 2003–2014, Texas Instruments Incorporated

Typical Application (continued)

10.2.3 Application Curves

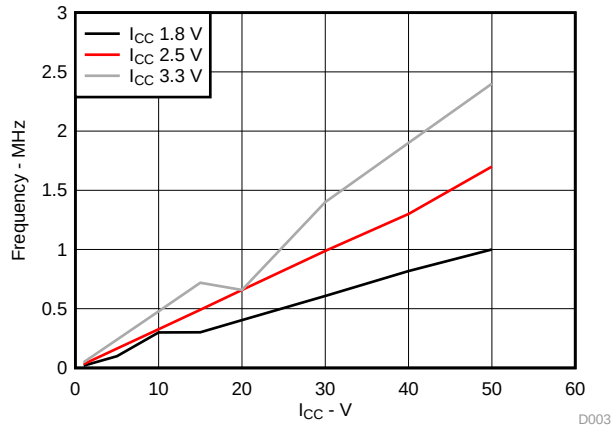

Figure 6. I_{CC} vs Frequency

11 Power Supply Recommendations

The power supply can be any voltage between the MIN and MAX supply voltage rating located in the *Recommended Operating Conditions* table.

Each V_{CC} pin should have a good bypass capacitor to prevent power disturbance. For devices with a single supply, 0.1 µf is recommended; if there are multiple V_{CC} pins, then 0.01 µf or 0.022 µf is recommended for each power pin. It is acceptable to parallel multiple bypass caps to reject different frequencies of noise. A 0.1 µf and a 1 µf are commonly used in parallel. The bypass capacitor should be installed as close to the power pin as possible for best results.

12 Layout

12.1 Layout Guidelines

When using multiple bit logic devices inputs should never float.

In many cases, functions or parts of functions of digital logic devices are unused, for example, when only two inputs of a triple-input AND gate are used or only 3 of the 4 buffer gates are used. Such input pins should not be left unconnected because the undefined voltages at the outside connections result in undefined operational states. Figure 7 specifies the rules that must be observed under all circumstances. All unused inputs of digital logic devices must be connected to a high or low bias to prevent them from floating. The logic level that should be applied to any particular unused input depends on the function of the device. Generally they will be tied to GND or V_{CC}, whichever makes more sense or is more convenient. It is generally acceptable to float outputs, unless the part is a transceiver.

12.2 Layout Example

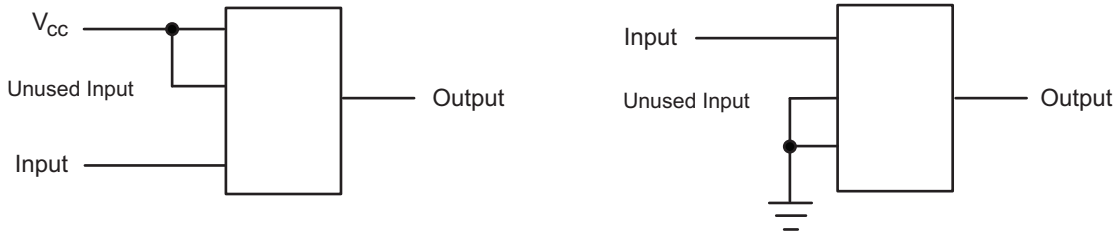

Figure 7. Layout Diagram

13 Device and Documentation Support

13.1 Trademarks

Widebus is a trademark of Texas Instruments.
All other trademarks are the property of their respective owners.

13.2 Electrostatic Discharge Caution

These devices have limited built-in ESD protection. The leads should be shorted together or the device placed in conductive foam during storage or handling to prevent electrostatic damage to the MOS gates.

13.3 Glossary

SLYZ022 — *TI Glossary*.

This glossary lists and explains terms, acronyms, and definitions.

14 Mechanical, Packaging, and Orderable Information

The following pages include mechanical, packaging, and orderable information. This information is the most current data available for the designated devices. This data is subject to change without notice and revision of this document. For browser-based versions of this data sheet, refer to the left-hand navigation.

Copyright © 2003–2014, Texas Instruments Incorporated

PACKAGING INFORMATION

Orderable Device	Status (1)	Package Type	Package Drawing	Pins	Package Qty	Eco Plan (2)	Lead finish/ Ball material (6)	MSL Peak Temp (3)	Op Temp (°C)	Device Marking (4/5)	Samples
74LVC16373ADGGRG4	ACTIVE	TSSOP	DGG	48	2000	RoHS & Green	NIPDAU	Level-1-260C-UNLIM	-40 to 125	LVC16373A	Samples
74LVC16373ADGVRE4	ACTIVE	TVSOP	DGV	48	2000	RoHS & Green	NIPDAU	Level-1-260C-UNLIM	-40 to 125	LD373A	Samples
SN74LVC16373ADGGR	ACTIVE	TSSOP	DGG	48	2000	RoHS & Green	NIPDAU	Level-1-260C-UNLIM	-40 to 125	LVC16373A	Samples
SN74LVC16373ADGVR	ACTIVE	TVSOP	DGV	48	2000	RoHS & Green	NIPDAU	Level-1-260C-UNLIM	-40 to 125	LD373A	Samples
SN74LVC16373ADL	ACTIVE	SSOP	DL	48	25	RoHS & Green	NIPDAU	Level-1-260C-UNLIM	-40 to 125	LVC16373A	Samples
SN74LVC16373ADLG4	ACTIVE	SSOP	DL	48	25	RoHS & Green	NIPDAU	Level-1-260C-UNLIM	-40 to 125	LVC16373A	Samples
SN74LVC16373ADLR	ACTIVE	SSOP	DL	48	1000	RoHS & Green	NIPDAU	Level-1-260C-UNLIM	-40 to 125	LVC16373A	Samples

(1) The marketing status values are defined as follows:
ACTIVE: Product device recommended for new designs.
LIFEBUY: TI has announced that the device will be discontinued, and a lifetime-buy period is in effect.
NRND: Not recommended for new designs. Device is in production to support existing customers, but TI does not recommend using this part in a new design.
PREVIEW: Device has been announced but is not in production. Samples may or may not be available.
OBSOLETE: TI has discontinued the production of the device.

(2) **RoHS:** TI defines "RoHS" to mean semiconductor products that are compliant with the current EU RoHS requirements for all 10 RoHS substances, including the requirement that RoHS substance do not exceed 0.1% by weight in homogeneous materials. Where designed to be soldered at high temperatures, "RoHS" products are suitable for use in specified lead-free processes. TI may reference these types of products as "Pb-Free".
RoHS Exempt: TI defines "RoHS Exempt" to mean products that contain lead but are compliant with EU RoHS pursuant to a specific EU RoHS exemption.
Green: TI defines "Green" to mean the content of Chlorine (Cl) and Bromine (Br) based flame retardants meet JS709B low halogen requirements of <=1000ppm threshold. Antimony trioxide based flame retardants must also meet the <=1000ppm threshold requirement.

(3) MSL, Peak Temp. - The Moisture Sensitivity Level rating according to the JEDEC industry standard classifications, and peak solder temperature.

(4) There may be additional marking, which relates to the logo, the lot trace code information, or the environmental category on the device.

(5) Multiple Device Markings will be inside parentheses. Only one Device Marking contained in parentheses and separated by a "~" will appear on a device. If a line is indented then it is a continuation of the previous line and the two combined represent the entire Device Marking for that device.

(6) Lead finish/Ball material - Orderable Devices may have multiple material finish options. Finish options are separated by a vertical ruled line. Lead finish/Ball material values may wrap to two lines if the finish value exceeds the maximum column width.

Important Information and Disclaimer: The information provided on this page represents TI's knowledge and belief as of the date that it is provided. TI bases its knowledge and belief on information provided by third parties, and makes no representation or warranty as to the accuracy of such information. Efforts are underway to better integrate information from third parties. TI has taken and continues to take reasonable steps to provide representative and accurate information but may not have conducted destructive testing or chemical analysis on incoming materials and chemicals. TI and TI suppliers consider certain information to be proprietary, and thus CAS numbers and other limited information may not be available for release.

In no event shall TI's liability arising out of such information exceed the total purchase price of the TI part(s) at issue in this document sold by TI to Customer on an annual basis.

OTHER QUALIFIED VERSIONS OF SN74LVC16373A :

- Enhanced Product: SN74LVC16373A-EP

NOTE: Qualified Version Definitions:

- Enhanced Product - Supports Defense, Aerospace and Medical Applications

TAPE AND REEL INFORMATION

REEL DIMENSIONS

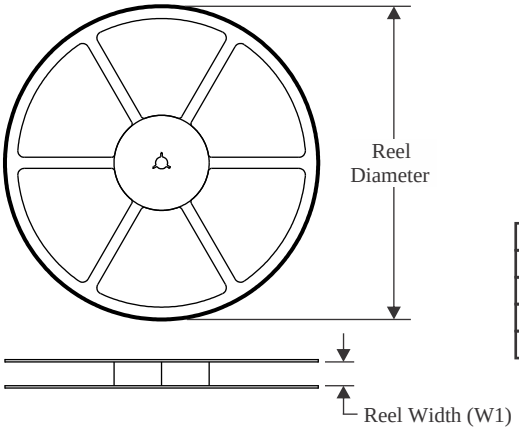

TAPE DIMENSIONS

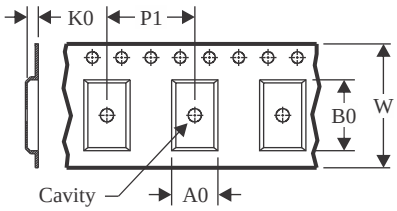

A0	Dimension designed to accommodate the component width
B0	Dimension designed to accommodate the component length
K0	Dimension designed to accommodate the component thickness
W	Overall width of the carrier tape
P1	Pitch between successive cavity centers

QUADRANT ASSIGNMENTS FOR PIN 1 ORIENTATION IN TAPE

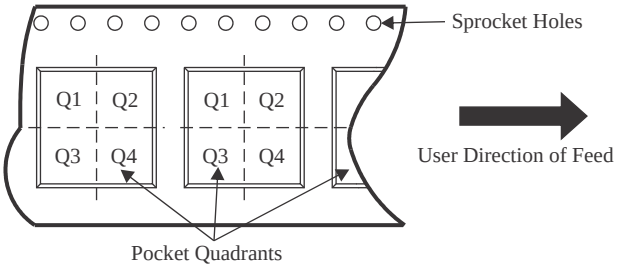

*All dimensions are nominal

Device	Package Type	Package Drawing	Pins	SPQ	Reel Diameter (mm)	Reel Width W1 (mm)	A0 (mm)	B0 (mm)	K0 (mm)	P1 (mm)	W (mm)	Pin1 Quadrant
SN74LVC16373ADGGR	TSSOP	DGG	48	2000	330.0	24.4	8.6	13.0	1.8	12.0	24.0	Q1
SN74LVC16373ADGVR	TVSOP	DGV	48	2000	330.0	16.4	7.1	10.2	1.6	12.0	16.0	Q1
SN74LVC16373ADLR	SSOP	DL	48	1000	330.0	32.4	11.35	16.2	3.1	16.0	32.0	Q1

TAPE AND REEL BOX DIMENSIONS

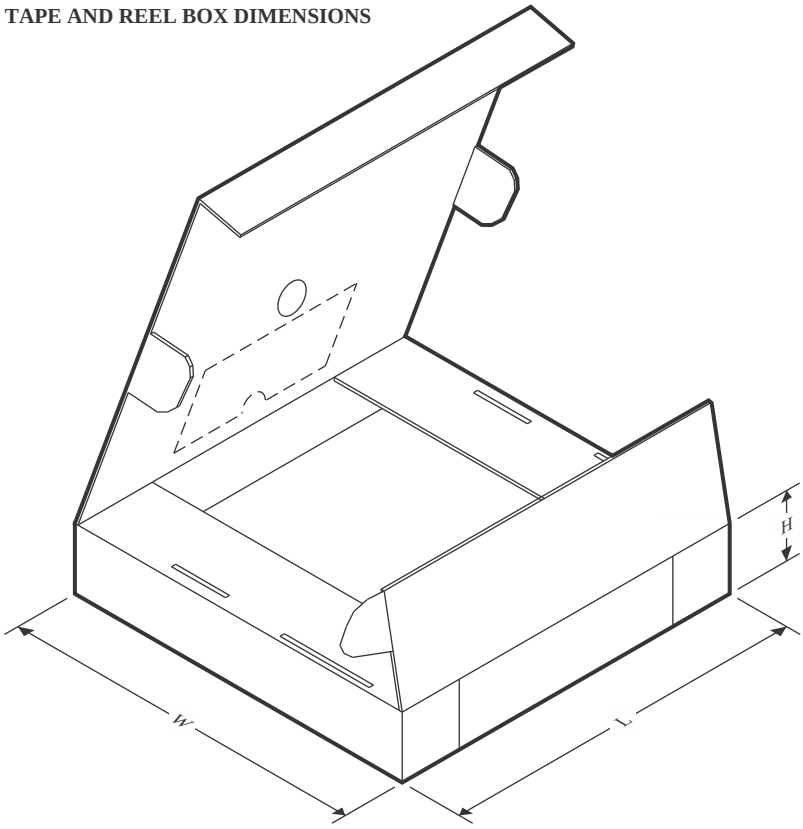

*All dimensions are nominal

Device	Package Type	Package Drawing	Pins	SPQ	Length (mm)	Width (mm)	Height (mm)
SN74LVC16373ADGGR	TSSOP	DGG	48	2000	367.0	367.0	45.0
SN74LVC16373ADGVR	TVSOP	DGV	48	2000	356.0	356.0	35.0
SN74LVC16373ADLR	SSOP	DL	48	1000	367.0	367.0	55.0

TUBE

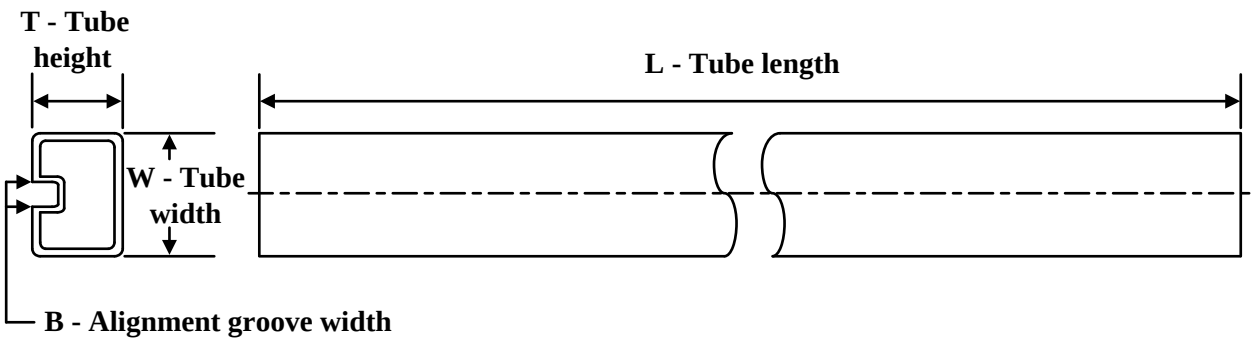

*All dimensions are nominal

Device	Package Name	Package Type	Pins	SPQ	L (mm)	W (mm)	T (µm)	B (mm)
SN74LVC16373ADL	DL	SSOP	48	25	473.7	14.24	5110	7.87
SN74LVC16373ADLG4	DL	SSOP	48	25	473.7	14.24	5110	7.87

DL (R–PDSO–G48) PLASTIC SMALL–OUTLINE PACKAGE

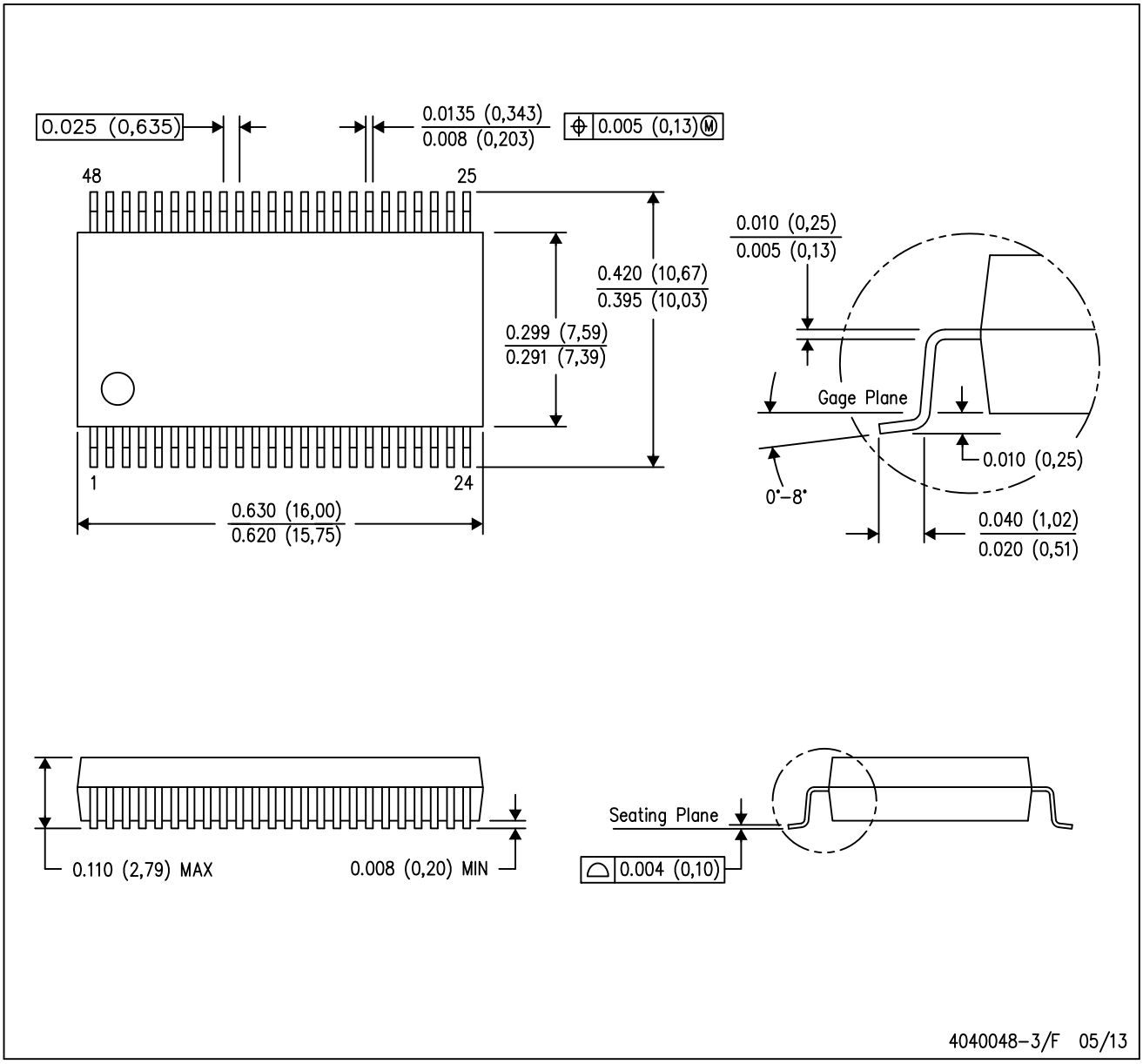

NOTES:
A. All linear dimensions are in inches (millimeters).
B. This drawing is subject to change without notice.
C. Body dimensions do not include mold flash or protrusion not to exceed 0.006 (0,15).
D. Falls within JEDEC MO–118

PowerPAD is a trademark of Texas Instruments.

DGV (R-PDSO-G)** **PLASTIC SMALL-OUTLINE**

24 PINS SHOWN

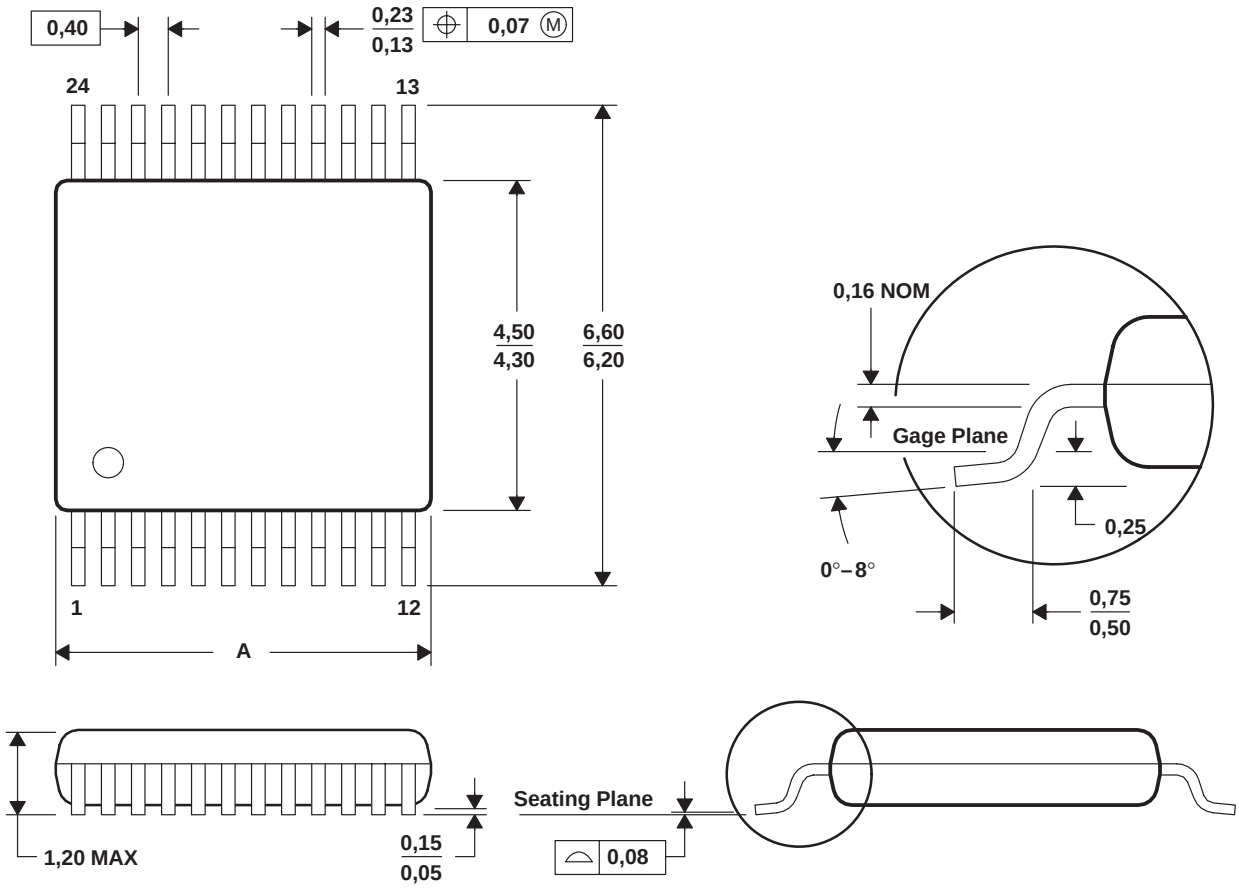

DIM \ PINS **	14	16	20	24	38	48	56
A MAX	3,70	3,70	5,10	5,10	7,90	9,80	11,40
A MIN	3,50	3,50	4,90	4,90	7,70	9,60	11,20

4073251/E 08/00

NOTES: A. All linear dimensions are in millimeters.
B. This drawing is subject to change without notice.
C. Body dimensions do not include mold flash or protrusion, not to exceed 0,15 per side.
D. Falls within JEDEC: 24/48 Pins – MO-153
14/16/20/56 Pins – MO-194

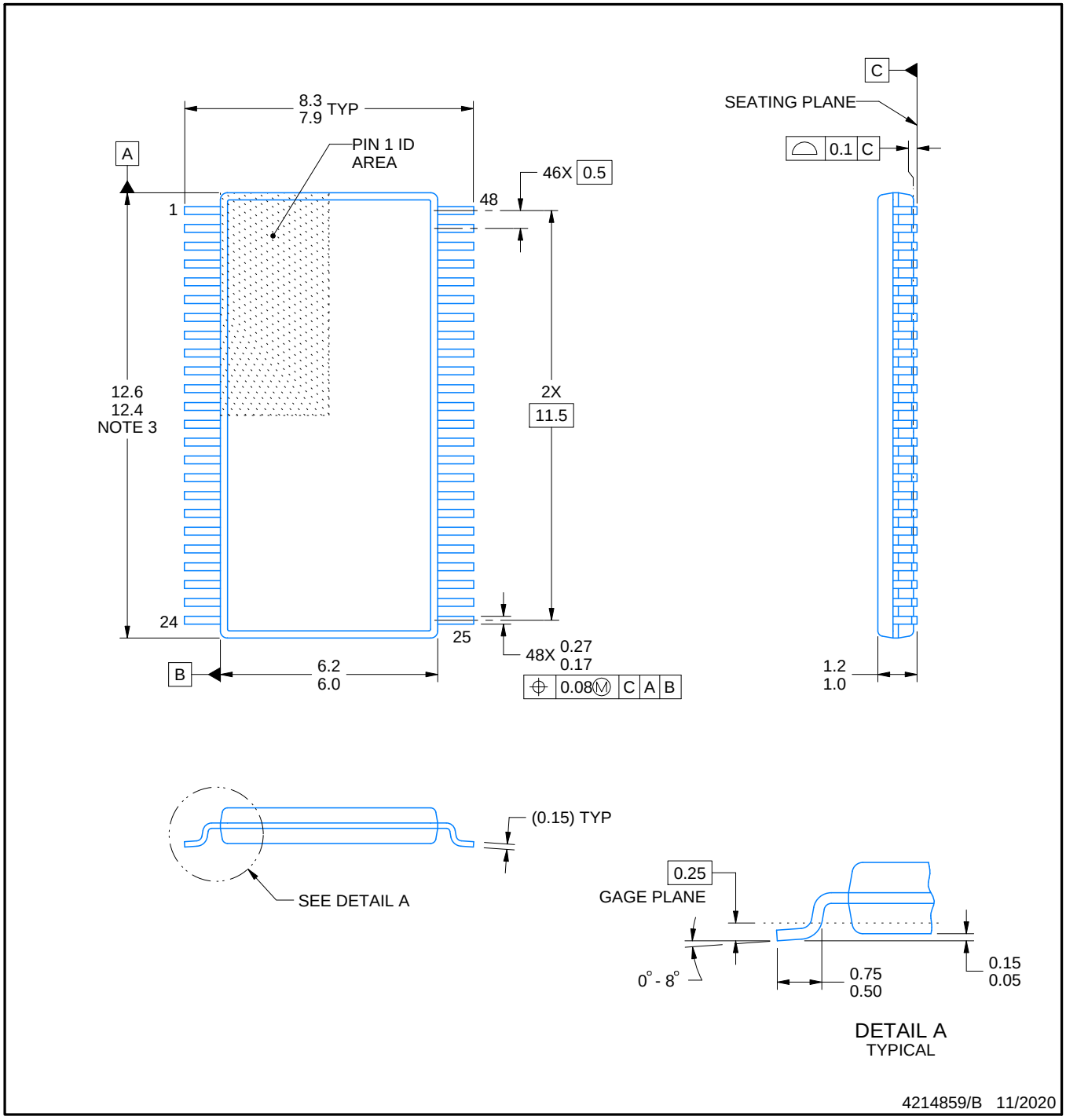

NOTES:

1. All linear dimensions are in millimeters. Any dimensions in parenthesis are for reference only. Dimensioning and tolerancing per ASME Y14.5M.
2. This drawing is subject to change without notice.
3. This dimension does not include mold flash, protrusions, or gate burrs. Mold flash, protrusions, or gate burrs shall not exceed 0.15 mm per side.
4. Reference JEDEC registration MO-153.

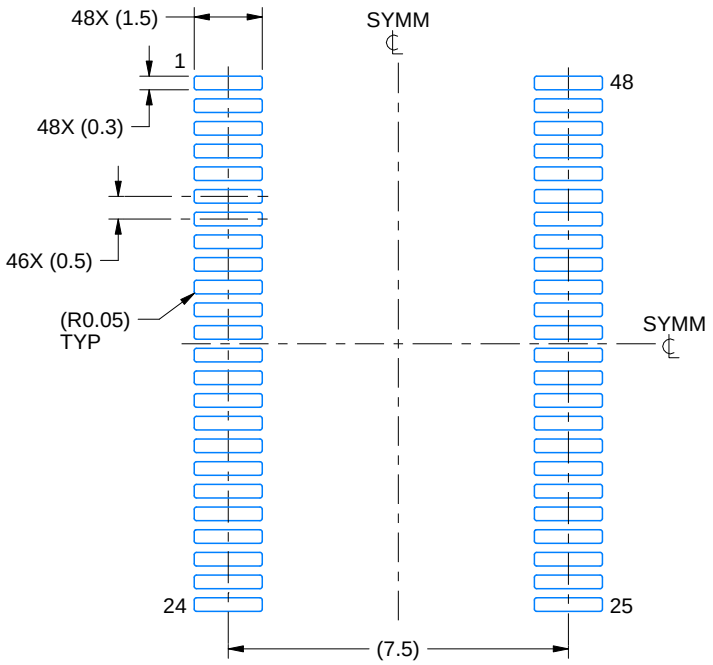

LAND PATTERN EXAMPLE
SCALE:6X

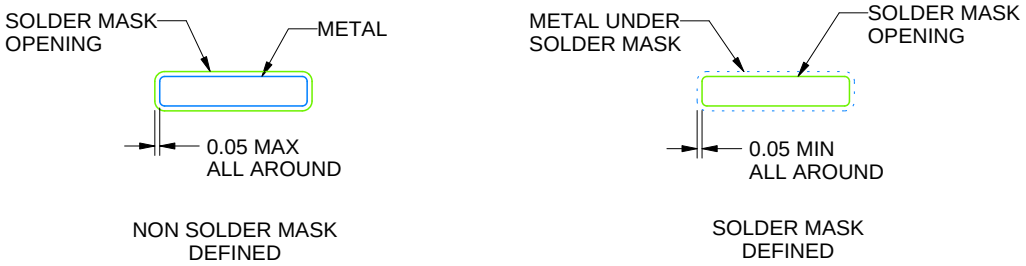

SOLDER MASK DETAILS

4214859/B 11/2020

NOTES: (continued)

5. Publication IPC-7351 may have alternate designs.
6. Solder mask tolerances between and around signal pads can vary based on board fabrication site.

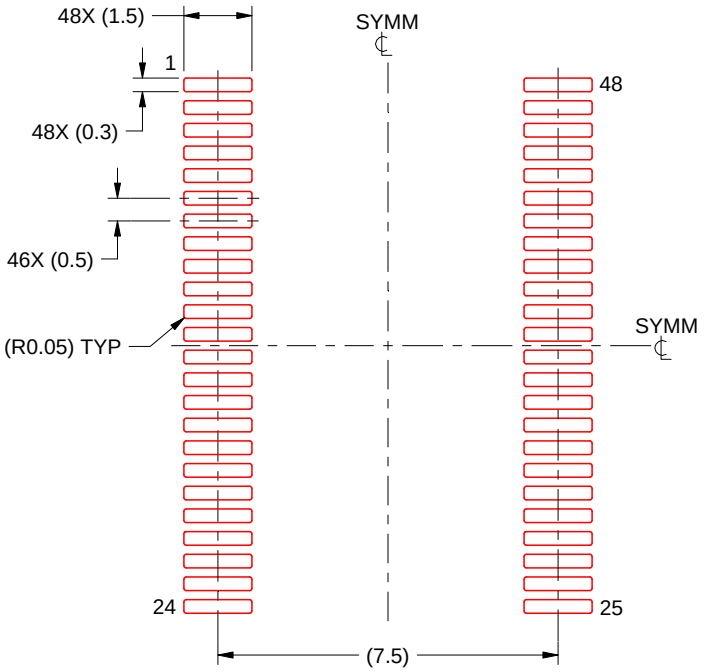

SOLDER PASTE EXAMPLE
BASED ON 0.125 mm THICK STENCIL
SCALE:6X

4214859/B 11/2020

NOTES: (continued)

7. Laser cutting apertures with trapezoidal walls and rounded corners may offer better paste release. IPC-7525 may have alternate design recommendations.
8. Board assembly site may have different recommendations for stencil design.

DGG (R-PDSO-G)** **PLASTIC SMALL-OUTLINE PACKAGE**

48 PINS SHOWN

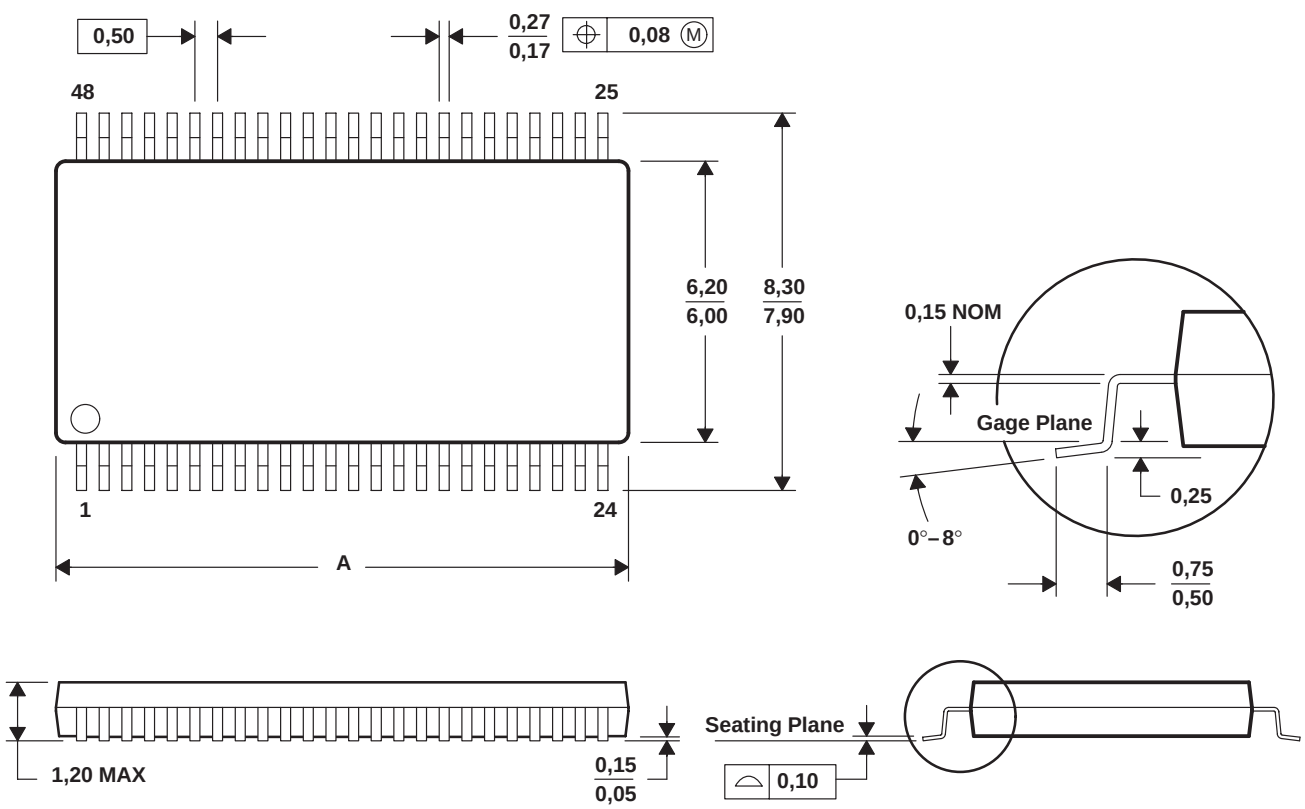

DIM \ PINS **	48	56	64
A MAX	12,60	14,10	17,10
A MIN	12,40	13,90	16,90

4040078/F 12/97

NOTES: A. All linear dimensions are in millimeters.
B. This drawing is subject to change without notice.
C. Body dimensions do not include mold protrusion not to exceed 0,15.
D. Falls within JEDEC MO-153

IMPORTANT NOTICE AND DISCLAIMER

TI PROVIDES TECHNICAL AND RELIABILITY DATA (INCLUDING DATA SHEETS), DESIGN RESOURCES (INCLUDING REFERENCE DESIGNS), APPLICATION OR OTHER DESIGN ADVICE, WEB TOOLS, SAFETY INFORMATION, AND OTHER RESOURCES “AS IS” AND WITH ALL FAULTS, AND DISCLAIMS ALL WARRANTIES, EXPRESS AND IMPLIED, INCLUDING WITHOUT LIMITATION ANY IMPLIED WARRANTIES OF MERCHANTABILITY, FITNESS FOR A PARTICULAR PURPOSE OR NON-INFRINGEMENT OF THIRD PARTY INTELLECTUAL PROPERTY RIGHTS.

These resources are intended for skilled developers designing with TI products. You are solely responsible for (1) selecting the appropriate TI products for your application, (2) designing, validating and testing your application, and (3) ensuring your application meets applicable standards, and any other safety, security, regulatory or other requirements.

These resources are subject to change without notice. TI grants you permission to use these resources only for development of an application that uses the TI products described in the resource. Other reproduction and display of these resources is prohibited. No license is granted to any other TI intellectual property right or to any third party intellectual property right. TI disclaims responsibility for, and you will fully indemnify TI and its representatives against, any claims, damages, costs, losses, and liabilities arising out of your use of these resources.

TI’s products are provided subject to TI’s Terms of Sale or other applicable terms available either on ti.com or provided in conjunction with such TI products. TI’s provision of these resources does not expand or otherwise alter TI’s applicable warranties or warranty disclaimers for TI products.

TI objects to and rejects any additional or different terms you may have proposed.

Mailing Address: Texas Instruments, Post Office Box 655303, Dallas, Texas 75265
Copyright © 2022, Texas Instruments Incorporated

Looking for pricing, stock, or lifecycle information?

Click below to explore more details on WIN SOURCE:

- View SN74LVC16373ADGGR on WIN SOURCE
- Texas Instruments Information

Optimize Your Supply Chain with WIN SOURCE Solutions

- Global Sourcing Solution
- Obsolete Management
- Cost Control Management
- Shortage Management
- Alternative Solution
- Excess Inventory Management