THE DATASHEET OF

SN74AHC1G08DCKR

www.win-source.net 0086-755-83957316

SN74AHC1G08 Single 2-Input Positive-AND Gate

1 Features

- Operating Range 2 V to 5.5 V
- Maximum t_{pd} of 7 ns at 5 V
- Low Power Consumption, 10-µA Maximum I_{CC}
- ±8-mA Output Drive at 5 V
- Schmitt-Trigger Action at All Inputs Makes the Circuit Tolerant for Slower Input Rise and Fall Time
- Latch-Up Performance Exceeds 250 mA Per JESD 17

2 Applications

- Barcode Scanners
- Cable Solutions
- E-Books
- Embedded PCs
- Field Transmitter: Temperature or Pressure Sensors
- Fingerprint Biometrics
- HVAC: Heating, Ventilating, and Air Conditioning
- Network-Attached Storage (NAS)
- Server Motherboard and PSU
- Software Defined Radios (SDR)
- TV: High Definition (HDTV), LCD, and Digital
- Video Communications Systems
- Wireless Data Access Cards, Headsets, Keyboards, Mice, and LAN Cards

3 Description

The SN74AHC1G08 device is a single 2-input positive-AND gate. The device performs the Boolean function Y = A ● B or Y = $\overline{A + B}$ in positive logic.

Package Information

PART NUMBER	PACKAGE(1)	PACKAGE SIZE(2)	BODY SIZE(3)
SN74AHC1G08	DBV (SOT-23, 5)	2.9 mm x 2.8 mm	2.9 mm x 1.6 mm
	DCK (SC-70, 5)	2 mm x 2.1 mm	2 mm × 1.25 mm
	DRL (SOT, 5)	1.6 mm x 1.6 mm	1.6 mm × 1.2 mm

(1) For all available packages, see the orderable addendum at the end of the data sheet.
(2) The package size (length × width) is a nominal value and includes pins, where applicable.
(3) The body size (length × width) is a nominal value and does not include pins.

Logic Diagram (Positive Logic)

An IMPORTANT NOTICE at the end of this data sheet addresses availability, warranty, changes, use in safety-critical applications, intellectual property matters and other important disclaimers. PRODUCTION DATA.

Table of Contents

1 Features....1
2 Applications....1
3 Description....1
4 Pin Configuration and Functions....3
5 Specifications....4
5.1 Absolute Maximum Ratings....4
5.2 ESD Ratings....4
5.3 Recommended Operating Conditions....4
5.4 Thermal Information....5
5.5 Electrical Characteristics....5
5.6 Switching Characteristics, V_{CC} = 3.3 V ± 0.3 V....5
5.7 Switching Characteristics, V_{CC} = 5 V ± 0.5 V....6
5.8 Operating Characteristics....6
5.9 Typical Characteristics....6
6 Parameter Measurement Information....7
7 Detailed Description....8
7.1 Overview....8
7.2 Functional Block Diagram....8
7.3 Feature Description....8
7.4 Device Functional Modes....8
8 Application and Implementation....9
8.1 Application Information....9
8.2 Typical Application....9
8.3 Power Supply Recommendations....10
8.4 Layout....10
9 Device and Documentation Support....12
9.1 Documentation Support (Analog)....12
9.2 Receiving Notification of Documentation Updates....12
9.3 Support Resources....12
9.4 Trademarks....12
9.5 Electrostatic Discharge Caution....12
9.6 Glossary....12
10 Revision History....12
11 Mechanical, Packaging, and Orderable Information....12

Copyright © 2024 Texas Instruments Incorporated

4 Pin Configuration and Functions

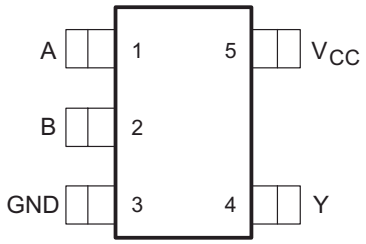

Figure 4-1. DBV Package 5-Pin SOT-23 Top View

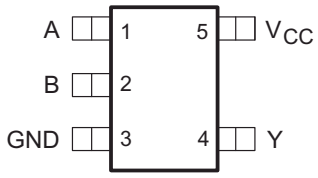

Figure 4-2. DCK Package 5-Pin SC70 Top View

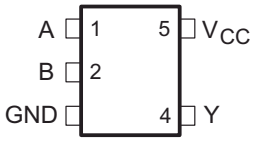

See mechanical drawings for dimensions (in *Section 11*).

Figure 4-3. DRL Package 5-Pin SOT Top View

Table 4-1. Pin Functions

PIN		TYPE[(1)]	DESCRIPTION
NO.	NAME		
1	A	I	Data Input
2	B	I	Data Input
3	GND	—	Ground
4	Y	O	Data Output
5	VCC	—	Power

(1) Signal Types: I = Input, O = Output, I/O = Input or Output

5 Specifications

5.1 Absolute Maximum Ratings

over operating free-air temperature range (unless otherwise noted)[1]

			MIN	MAX	UNIT
V_{CC}	Supply voltage		–0.5	7	V
V_I	Input voltage[2]		–0.5	7	V
V_O	Output voltage[2]		–0.5	V_{CC} + 0.5	V
I_{IK}	Input clamp current	V_I < 0		–20	mA
I_{OK}	Output clamp current	V_O < 0 or V_O > V_{CC}		±20	mA
I_O	Continuous output current	V_O = 0 to V_{CC}		±25	mA
	Continuous current through V_{CC} or GND			±50	mA
T_J	Junction temperature			150	°C
T_{stg}	Storage temperature		–65	150	°C

(1) Stresses beyond those listed under *Absolute Maximum Ratings* may cause permanent damage to the device. These are stress ratings only, and functional operation of the device at these or any other conditions beyond those indicated under *Recommended Operating Conditions* is not implied. Exposure to absolute-maximum-rated conditions for extended periods may affect device reliability.
(2) The input and output voltage ratings may be exceeded if the input and output current ratings are observed.

5.2 ESD Ratings

			VALUE	UNIT
$V_{(ESD)}$	Electrostatic discharge	Human body model (HBM), per ANSI/ESDA/JEDEC JS-001, all pins[1]	±2000	V
		Charged-device model (CDM), per JEDEC specification JESD22-C101, all pins[2]	±1000	

(1) JEDEC document JEP155 states that 500-V HBM allows safe manufacturing with a standard ESD control process.
(2) JEDEC document JEP157 states that 250-V CDM allows safe manufacturing with a standard ESD control process.

5.3 Recommended Operating Conditions

over operating free-air temperature range (unless otherwise noted)[1]

			MIN	MAX	UNIT
V_{CC}	Supply voltage		2	5.5	V
V_{IH}	High-level input voltage	V_{CC} = 2 V	1.5		V
		V_{CC} = 3 V	2.1		
		V_{CC} = 5.5 V	3.85		
V_{IL}	Low-level Input voltage	V_{CC} = 2 V		0.5	V
		V_{CC} = 3 V		0.9	
		V_{CC} = 5.5 V		1.65	
V_I	Input voltage		0	5.5	V
V_O	Output voltage		0	V_{CC}	V
I_{OH}	High-level output current	V_{CC} = 2 V		–50	µA
		V_{CC} = 3.3 V ± 0.3 V		–4	mA
		V_{CC} = 5 V ± 0.5 V		–8	
I_{OL}	Low-level output current	V_{CC} = 2 V		50	µA
		V_{CC} = 3.3 V ± 0.3 V		4	mA
		V_{CC} = 5 V ± 0.5 V		8	
Δt/Δv	Input transition rise or fall rate	V_{CC} = 3.3 V ± 0.3 V		100	ns/V
		V_{CC} = 5 V ± 0.5 V		20	

Copyright © 2024 Texas Instruments Incorporated

over operating free-air temperature range (unless otherwise noted)[1]

		MIN	MAX	UNIT
T_A	Operating free-air temperature	–55	125	°C

(1) All unused inputs of the device must be held at V_{CC} or GND to ensure proper device operation. Refer to the TI application report, *Implications of Slow or Floating CMOS Inputs*, SCBA004.

5.4 Thermal Information

THERMAL METRIC[1]		SN74AHC1G08			UNIT
		DBV (SOT-23)	DCK (SC70)	DRL (SOT)	
		5 PINS	5 PINS	5 PINS	
$R_{\theta JA}$	Junction-to-ambient thermal resistance	278	289.2	142	°C/W

(1) For more information about traditional and new thermal metrics, see the *Semiconductor and IC Package Thermal Metrics* application report, SPRA953.

5.5 Electrical Characteristics

over operating free-air temperature range (unless otherwise noted)

PARAMETER		TEST CONDITIONS	V_{CC}	T_A = 25°C			T_A = –55°C to 125°C		UNIT
				MIN	TYP	MAX	MIN	MAX	
V_{OH}	High level output voltage	I_{OH} = –50 µA	2 V	1.9	2		1.9		V
			3 V	2.9	3		2.9		
			4.5 V	4.4	4.5		4.4		
		I_{OH} = –4 mA	3 V	2.58			2.48		
		I_{OH} = –8 mA	4.5 V	3.94			3.8		
V_{OL}	Low level output voltage	I_{OL} = 50 µA	2 V			0.1		0.1	V
			3 V			0.1		0.1	
			4.5 V			0.1		0.1	
		I_{OL} = 4 mA	3 V			0.36		0.44	
		I_{OL} = 8 mA	4.5 V			0.36		0.44	
I_I	Input leakage current	V_I = 5.5 V or GND	0 V to 5.5 V			±0.1		±1	µA
I_{CC}	Supply current	V_I = V_{CC} or GND, I_O = 0	5.5 V			1		10	µA
C_i	Input Capacitance	V_I = V_{CC} or GND	5 V		4	10		10	pF

5.6 Switching Characteristics, V_{CC} = 3.3 V ± 0.3 V

over recommended operating free-air temperature range, V_{CC} = 3.3 V ± 0.3 V (unless otherwise noted) (see Load Circuit and Voltage Waveforms)

PARAMETER	FROM (INPUT)	TO (OUTPUT)	OUTPUT CAPACITANCE	T_A = 25°C			T_A = –40°C to 85°C		T_A = –55°C to 125°C		UNIT
				MIN	TYP	MAX	MIN	MAX	MIN	MAX	
t_{PLH}	A or B	Y	C_L = 15 pF		6.2	8.8	1	10.5	1	11	ns
t_{PHL}					6.2	8.8	1	10.5	1	11	
t_{PLH}	A or B	Y	C_L = 50 pF		8.7	12.3	1	14	1	14.5	ns
t_{PHL}					8.7	12.3	1	14	1	14.5	

5.7 Switching Characteristics, V_{CC} = 5 V ± 0.5 V

over recommended operating free-air temperature range, V_{CC} = 5 V ± 0.5 V (unless otherwise noted) (see Load Circuit and Voltage Waveforms)

PARAMETER	FROM (INPUT)	TO (OUTPUT)	OUTPUT CAPACITANCE	T_A = 25°C			T_A = –40°C to 85°C		T_A = –55°C to 125°C		UNIT
				MIN	TYP	MAX	MIN	MAX	MIN	MAX	
t_{PLH}	A or B	Y	C_L = 15 pF		4.3	5.9	1	7	1	7.5	ns
t_{PHL}					4.3	5.9	1	7	1	7.5	
t_{PLH}	A or B	Y	C_L = 50 pF		5.8	7.9	1	9	1	9.5	ns
t_{PHL}					5.8	7.9	1	9	1	9.5	

5.8 Operating Characteristics

V_{CC} = 5 V, T_A = 25°C

PARAMETER		TEST CONDITIONS		TYP	UNIT
C_{pd}	Power dissipation capacitance	No load,	f = 1 MHz	18	pF

5.9 Typical Characteristics

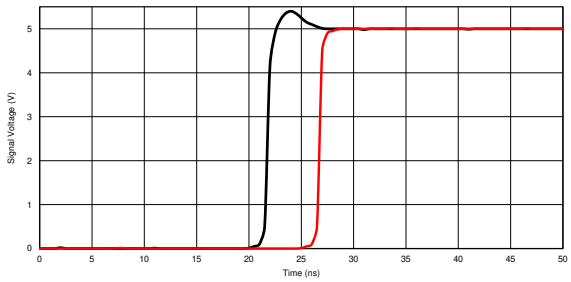

Figure 5-1. Response Time vs Output Voltage (T_A = 25°C, V_A = 5 V)

Copyright © 2024 Texas Instruments Incorporated

6 Parameter Measurement Information

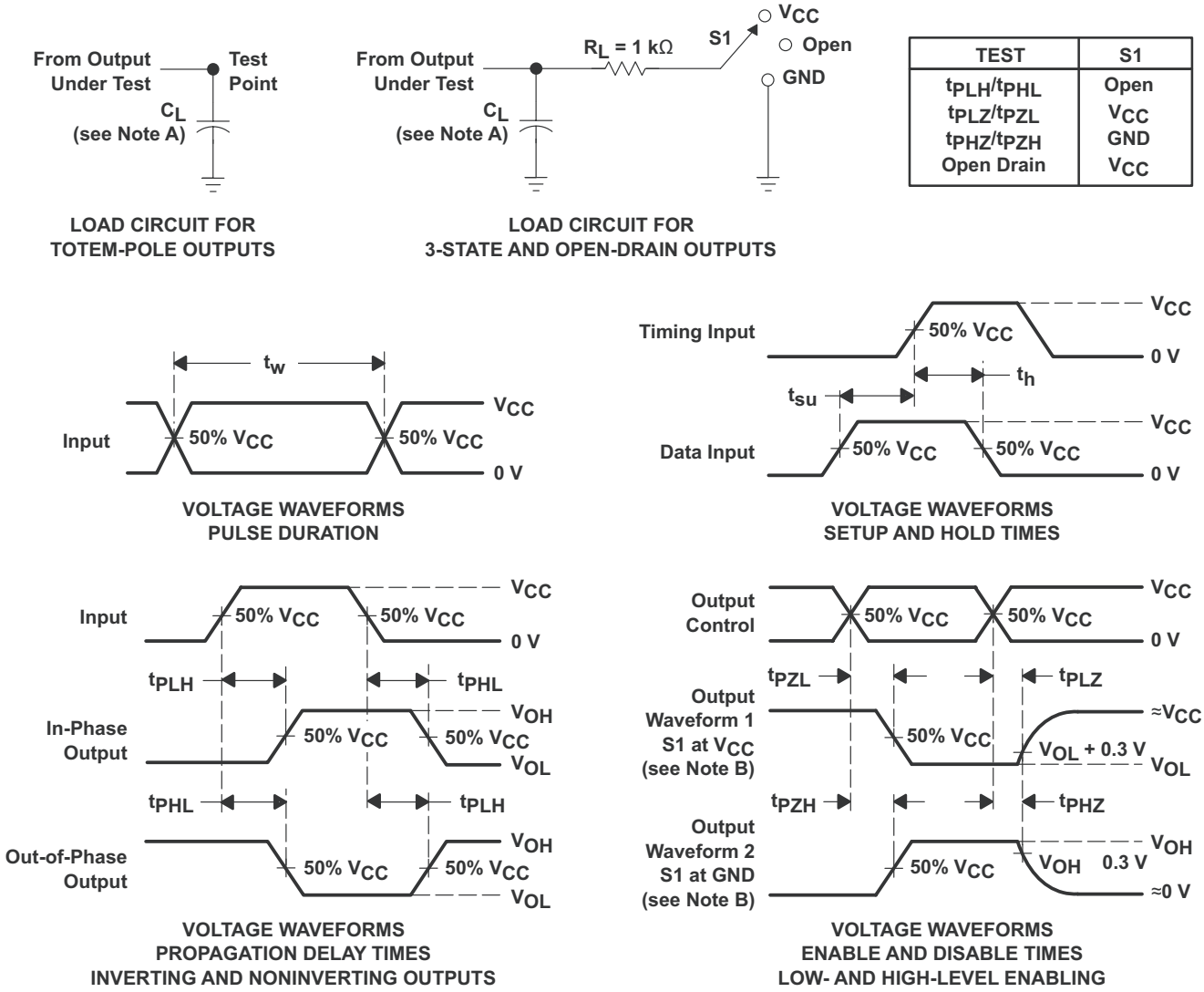

TEST	S1
t_{PLH}/t_{PHL}	Open
t_{PLZ}/t_{PZL}	V_{CC}
t_{PHZ}/t_{PZH}	GND
Open Drain	V_{CC}

A. C_L includes probe and jig capacitance.
B. Waveform 1 is for an output with internal conditions such that the output is low except when disabled by the output control. Waveform 2 is for an output with internal conditions such that the output is high except when disabled by the output control.
C. All input pulses are supplied by generators having the following characteristics: PRR ≤ 1 MHz, Z_O = 50 Ω, t_r ≤ 3 ns, t_f ≤ 3 ns.
D. The outputs are measured one at a time with one input transition per measurement.
E. All parameters and waveforms are not applicable to all devices.

Figure 6-1. Load Circuit and Voltage Waveforms

7 Detailed Description

7.1 Overview

The SN74AHC1G08 device is a single 2-input positive-AND gate. The device performs the Boolean function Y = A ● B or Y = $\overline{A + B}$ in positive logic.

7.2 Functional Block Diagram

Figure 7-1. Logic Diagram (Positive Side)

7.3 Feature Description

The SN74AHC1G08 device has a wide operating V_{CC} range of 2 V to 5.5 V, which allows it to be used in a broad range of systems. The low propagation delay allows fast switching and higher operation speeds. In addition, the low-power consumption makes this device a good choice for portable and battery power-sensitive applications.

7.4 Device Functional Modes

Table 7-1 lists the functional modes for SN74AHC1G08.

Table 7-1. Function Table

INPUTS(1)		OUTPUT(2)
A	B	Y
H	H	H
L	X	L
X	L	L

(1) H = High Voltage Level, L = Low Voltage Level, X = Don't Care
(2) H = Driving High, L = Driving Low, Z = High Impedance State

Copyright © 2024 Texas Instruments Incorporated

8 Application and Implementation

Note

Information in the following applications sections is not part of the TI component specification, and TI does not warrant its accuracy or completeness. TI's customers are responsible for determining suitability of components for their purposes, as well as validating and testing their design implementation to confirm system functionality.

8.1 Application Information

A common application for AND gates is their use in power sequencing. Power sequencing is often employed in applications that require a processor or other delicate device with specific voltage timing requirements in order to protect the device from malfunctioning. Using the SN74AHC1G08 to verify that the processor has turned on can protect it from any harmful signals.

8.2 Typical Application

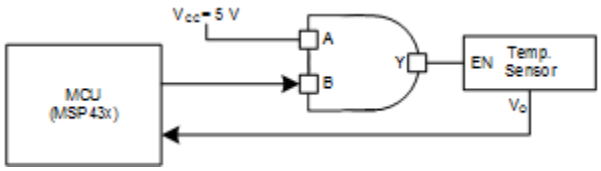

Figure 8-1. Power Sequencing Application

8.2.1 Design Requirements

The SN74AHC1G08 device uses CMOS technology and has balanced output drive. Take care to avoid bus contention because it can drive currents that would exceed maximum limits.

The SN74AHC1G08 allows switching control of analog and digital signals with a digital control signal. All input signals should remain as close to either 0 V or V_{CC} as possible for optimal operation.

8.2.2 Detailed Design Procedure

1. Recommended input conditions:
   - For rise time and fall time specifications, see Δt/Δv in the *Section 5.3* table.
   - For specified high and low levels, see V_{IH} and V_{IL} in the *Section 5.3* table.
   - Inputs and outputs are overvoltage tolerant and can therefore go as high as 5.5 V at any valid V_{CC}.
2. Recommended output conditions:
   - Load currents should not exceed ±50 mA.
3. Frequency selection criterion:
   - The effects of frequency upon the device's power consumption should be studied in *CMOS Power Consumption and CPD Calculation*, SCAA035.
   - Added trace resistance and capacitance can reduce maximum frequency capability; follow the layout practices listed in the *Section 8.4* section.

8.2.3 Application Curves

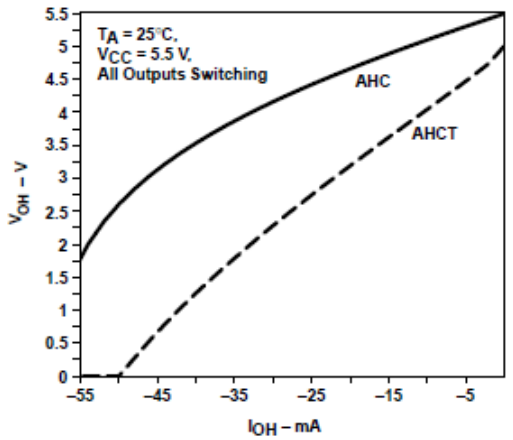

Figure 8-2. AHC Family V_{OH} vs I_{OH} at V_{CC} = 5.5 V

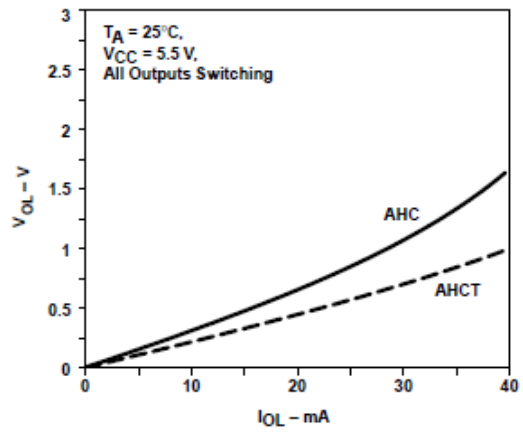

Figure 8-3. AHC Family V_{OL} vs I_{OL} at V_{CC} = 5.5 V

8.3 Power Supply Recommendations

The power supply can be any voltage between the minimum and maximum supply voltage rating listed in the *Section 5.3* table.

Each V_{CC} terminal should have a bypass capacitor to prevent power disturbance. A 0.1-µF bypass capacitor is recommended for devices with a single supply. If multiple pins are labeled V_{CC}, then a 0.01-µF or 0.022-µF capacitor is recommended for each V_{CC} because the V_{CC} pins are tied together internally. For devices with dual-supply pins operating at different voltages, for example V_{CC} and V_{DD}, a 0.1-µF bypass capacitor is recommended for each supply pin. Use multiple bypass capacitors in parallel to reject different frequencies of noise. Capacitors with values of 0.1 µF and 1 µF are commonly used in parallel. The bypass capacitor should be installed as close to the power terminal as possible for best results.

8.4 Layout

8.4.1 Layout Guidelines

Reflections and matching are closely related to the loop antenna theory but are different enough to be discussed separately from the theory. When a PCB trace turns a corner at a 90° angle, a reflection can occur. A reflection occurs primarily because of the change of width of the trace. At the apex of the turn, the trace width increases to 1.414 times the width. This increase upsets the transmission-line characteristics, especially the distributed capacitance and self–inductance of the trace which results in the reflection. Not all PCB traces can be straight and therefore some traces must turn corners. Figure 8-4 shows progressively better techniques of rounding corners. Only the last example (BEST) maintains constant trace width and minimizes reflections.

Copyright © 2024 Texas Instruments Incorporated

8.4.1.1 Layout Example

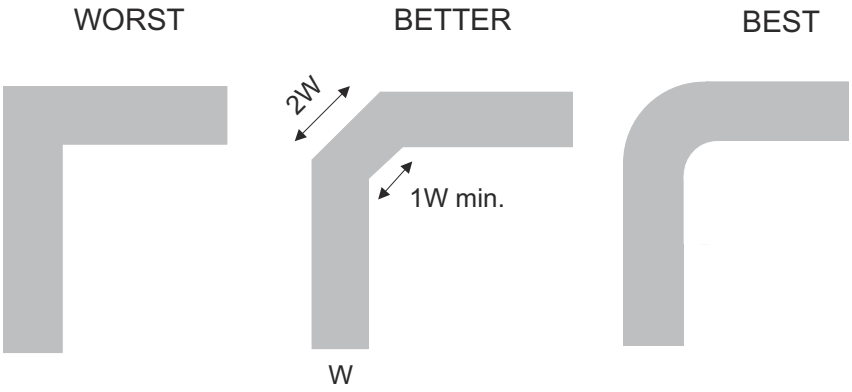

Figure 8-4. Trace Example

9 Device and Documentation Support

9.1 Documentation Support (Analog)

9.1.1 Related Documentation

For related documentation see the following:

- *Implications of Slow or Floating CMOS Inputs*, SCBA004
- *CMOS Power Consumption and CPD Calculation*, SCAA035
- *Selecting the Right Texas Instruments Signal Switch*, SZZA030

9.2 Receiving Notification of Documentation Updates

To receive notification of documentation updates, navigate to the device product folder on ti.com. Click on *Notifications* to register and receive a weekly digest of any product information that has changed. For change details, review the revision history included in any revised document.

9.3 Support Resources

TI E2E™ support forums are an engineer's go-to source for fast, verified answers and design help — straight from the experts. Search existing answers or ask your own question to get the quick design help you need.

Linked content is provided "AS IS" by the respective contributors. They do not constitute TI specifications and do not necessarily reflect TI's views; see TI's Terms of Use.

9.4 Trademarks

TI E2E™ is a trademark of Texas Instruments.
All trademarks are the property of their respective owners.

9.5 Electrostatic Discharge Caution

This integrated circuit can be damaged by ESD. Texas Instruments recommends that all integrated circuits be handled with appropriate precautions. Failure to observe proper handling and installation procedures can cause damage.

ESD damage can range from subtle performance degradation to complete device failure. Precision integrated circuits may be more susceptible to damage because very small parametric changes could cause the device not to meet its published specifications.

9.6 Glossary

TI Glossary	This glossary lists and explains terms, acronyms, and definitions.

10 Revision History

NOTE: Page numbers for previous revisions may differ from page numbers in the current version.

Changes from Revision Q (October 2023) to Revision R (January 2024)	Page
• Updated RθJA values: DBV = 206 to 278, all values in °C/W	5

Changes from Revision P (March 2016) to Revision Q (October 2023)	Page
• Updated the numbering format for tables, figures, and cross-references throughout the document	1
• Updated RθJA values: DCK = 252 to 289.2, all values in °C/W	5

11 Mechanical, Packaging, and Orderable Information

The following pages include mechanical, packaging, and orderable information. This information is the most current data available for the designated devices. This data is subject to change without notice and revision of this document. For browser based versions of this data sheet, refer to the left hand navigation.

Copyright © 2024 Texas Instruments Incorporated

PACKAGING INFORMATION

Orderable Device	Status (1)	Package Type	Package Drawing	Pins	Package Qty	Eco Plan (2)	Lead finish/ Ball material (6)	MSL Peak Temp (3)	Op Temp (°C)	Device Marking (4/5)	Samples
SN74AHC1G08DBV3	ACTIVE	SOT-23	DBV	5	3000	RoHS & Non-Green	SNBI	Level-1-260C-UNLIM	-55 to 125	A08Y	Samples
SN74AHC1G08DBVR	ACTIVE	SOT-23	DBV	5	3000	RoHS & Green	NIPDAU | SN	Level-1-260C-UNLIM	-55 to 125	(A083, A08G, A08J, A08L, A08S)	Samples
SN74AHC1G08DBVRE4	ACTIVE	SOT-23	DBV	5	3000	RoHS & Green	NIPDAU	Level-1-260C-UNLIM	-55 to 125	A08G	Samples
SN74AHC1G08DBVRG4	ACTIVE	SOT-23	DBV	5	3000	RoHS & Green	NIPDAU	Level-1-260C-UNLIM	-55 to 125	A08G	Samples
SN74AHC1G08DBVTG4	ACTIVE	SOT-23	DBV	5	250	RoHS & Green	NIPDAU	Level-1-260C-UNLIM	-55 to 125	A08G	Samples
SN74AHC1G08DCK3	ACTIVE	SC70	DCK	5	3000	RoHS & Non-Green	SNBI	Level-1-260C-UNLIM	-55 to 125	AEY	Samples
SN74AHC1G08DCKR	ACTIVE	SC70	DCK	5	3000	RoHS & Green	NIPDAU | SN	Level-1-260C-UNLIM	-55 to 125	(AE3, AEG, AEJ, AEL, AES)	Samples
SN74AHC1G08DCKRE4	ACTIVE	SC70	DCK	5	3000	RoHS & Green	NIPDAU	Level-1-260C-UNLIM	-55 to 125	AE3	Samples
SN74AHC1G08DCKRG4	ACTIVE	SC70	DCK	5	3000	RoHS & Green	NIPDAU	Level-1-260C-UNLIM	-55 to 125	AE3	Samples
SN74AHC1G08DCKTE4	ACTIVE	SC70	DCK	5	250	RoHS & Green	NIPDAU	Level-1-260C-UNLIM	-55 to 125	AE3	Samples
SN74AHC1G08DCKTG4	ACTIVE	SC70	DCK	5	250	RoHS & Green	NIPDAU	Level-1-260C-UNLIM	-55 to 125	AE3	Samples
SN74AHC1G08DRLR	ACTIVE	SOT-5X3	DRL	5	4000	RoHS & Green	NIPDAU | NIPDAUAG	Level-1-260C-UNLIM	-55 to 125	(AEB, AES)	Samples
SN74AHC1G08DRLRG4	ACTIVE	SOT-5X3	DRL	5	4000	RoHS & Green	NIPDAUAG	Level-1-260C-UNLIM	-55 to 125	(AEB, AES)	Samples

(1) The marketing status values are defined as follows:
ACTIVE: Product device recommended for new designs.
LIFEBUY: TI has announced that the device will be discontinued, and a lifetime-buy period is in effect.
NRND: Not recommended for new designs. Device is in production to support existing customers, but TI does not recommend using this part in a new design.
PREVIEW: Device has been announced but is not in production. Samples may or may not be available.
OBSOLETE: TI has discontinued the production of the device.

(2) **RoHS:** TI defines "RoHS" to mean semiconductor products that are compliant with the current EU RoHS requirements for all 10 RoHS substances, including the requirement that RoHS substance do not exceed 0.1% by weight in homogeneous materials. Where designed to be soldered at high temperatures, "RoHS" products are suitable for use in specified lead-free processes. TI may reference these types of products as "Pb-Free".
RoHS Exempt: TI defines "RoHS Exempt" to mean products that contain lead but are compliant with EU RoHS pursuant to a specific EU RoHS exemption.

Green: TI defines "Green" to mean the content of Chlorine (Cl) and Bromine (Br) based flame retardants meet JS709B low halogen requirements of <=1000ppm threshold. Antimony trioxide based flame retardants must also meet the <=1000ppm threshold requirement.

(3) MSL, Peak Temp. - The Moisture Sensitivity Level rating according to the JEDEC industry standard classifications, and peak solder temperature.

(4) There may be additional marking, which relates to the logo, the lot trace code information, or the environmental category on the device.

(5) Multiple Device Markings will be inside parentheses. Only one Device Marking contained in parentheses and separated by a "~" will appear on a device. If a line is indented then it is a continuation of the previous line and the two combined represent the entire Device Marking for that device.

(6) Lead finish/Ball material - Orderable Devices may have multiple material finish options. Finish options are separated by a vertical ruled line. Lead finish/Ball material values may wrap to two lines if the finish value exceeds the maximum column width.

Important Information and Disclaimer: The information provided on this page represents TI's knowledge and belief as of the date that it is provided. TI bases its knowledge and belief on information provided by third parties, and makes no representation or warranty as to the accuracy of such information. Efforts are underway to better integrate information from third parties. TI has taken and continues to take reasonable steps to provide representative and accurate information but may not have conducted destructive testing or chemical analysis on incoming materials and chemicals. TI and TI suppliers consider certain information to be proprietary, and thus CAS numbers and other limited information may not be available for release.

In no event shall TI's liability arising out of such information exceed the total purchase price of the TI part(s) at issue in this document sold by TI to Customer on an annual basis.

OTHER QUALIFIED VERSIONS OF SN74AHC1G08 :

- Automotive : SN74AHC1G08-Q1

NOTE: Qualified Version Definitions:

- Automotive - Q100 devices qualified for high-reliability automotive applications targeting zero defects

TAPE AND REEL INFORMATION

REEL DIMENSIONS

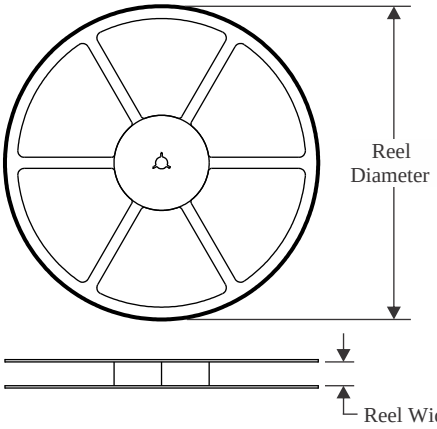

TAPE DIMENSIONS

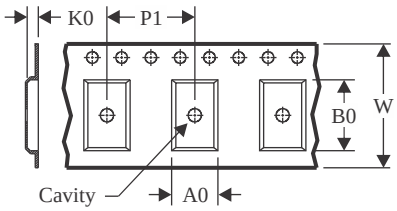

A0	Dimension designed to accommodate the component width
B0	Dimension designed to accommodate the component length
K0	Dimension designed to accommodate the component thickness
W	Overall width of the carrier tape
P1	Pitch between successive cavity centers

QUADRANT ASSIGNMENTS FOR PIN 1 ORIENTATION IN TAPE

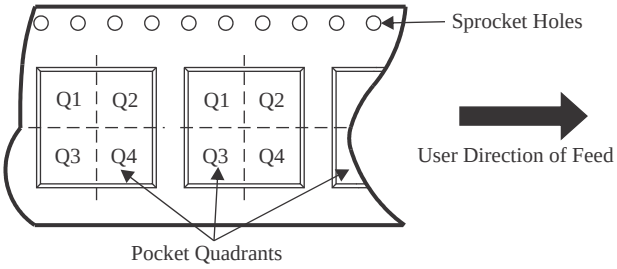

*All dimensions are nominal

Device	Package Type	Package Drawing	Pins	SPQ	Reel Diameter (mm)	Reel Width W1 (mm)	A0 (mm)	B0 (mm)	K0 (mm)	P1 (mm)	W (mm)	Pin1 Quadrant
SN74AHC1G08DBVR	SOT-23	DBV	5	3000	178.0	9.0	3.3	3.2	1.4	4.0	8.0	Q3
SN74AHC1G08DBVRG4	SOT-23	DBV	5	3000	178.0	9.0	3.23	3.17	1.37	4.0	8.0	Q3
SN74AHC1G08DBVTG4	SOT-23	DBV	5	250	178.0	9.0	3.23	3.17	1.37	4.0	8.0	Q3
SN74AHC1G08DCKR	SC70	DCK	5	3000	180.0	8.4	2.47	2.3	1.25	4.0	8.0	Q3
SN74AHC1G08DCKR	SC70	DCK	5	3000	178.0	9.0	2.4	2.5	1.2	4.0	8.0	Q3
SN74AHC1G08DCKRG4	SC70	DCK	5	3000	178.0	9.2	2.4	2.4	1.22	4.0	8.0	Q3
SN74AHC1G08DCKTG4	SC70	DCK	5	250	178.0	9.2	2.4	2.4	1.22	4.0	8.0	Q3
SN74AHC1G08DRLR	SOT-5X3	DRL	5	4000	180.0	8.4	1.98	1.78	0.69	4.0	8.0	Q3

TAPE AND REEL BOX DIMENSIONS

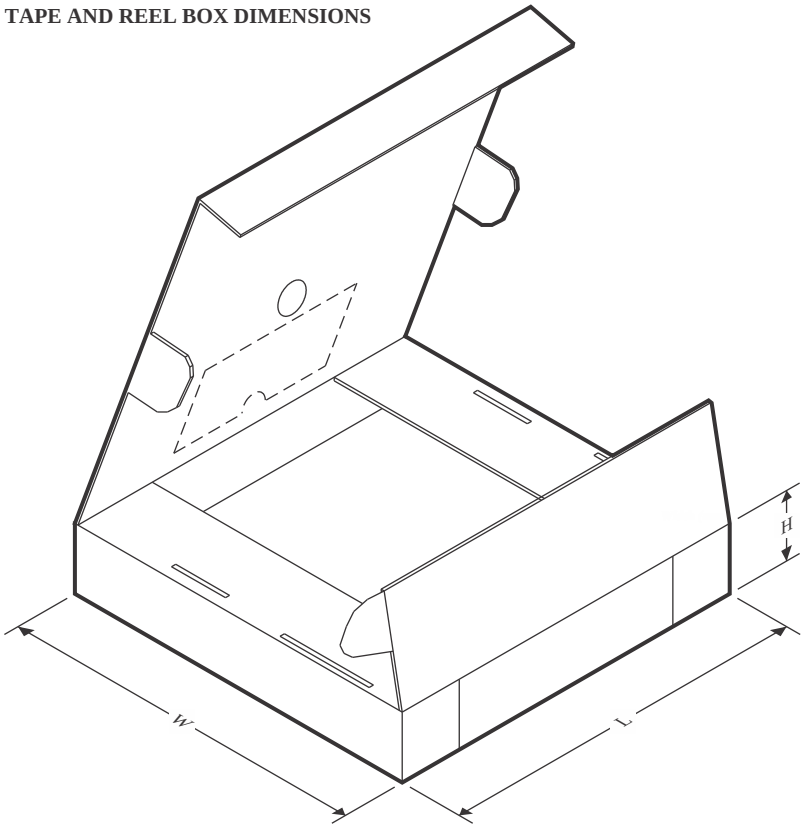

*All dimensions are nominal

Device	Package Type	Package Drawing	Pins	SPQ	Length (mm)	Width (mm)	Height (mm)
SN74AHC1G08DBVR	SOT-23	DBV	5	3000	180.0	180.0	18.0
SN74AHC1G08DBVRG4	SOT-23	DBV	5	3000	180.0	180.0	18.0
SN74AHC1G08DBVTG4	SOT-23	DBV	5	250	180.0	180.0	18.0
SN74AHC1G08DCKR	SC70	DCK	5	3000	202.0	201.0	28.0
SN74AHC1G08DCKR	SC70	DCK	5	3000	180.0	180.0	18.0
SN74AHC1G08DCKRG4	SC70	DCK	5	3000	180.0	180.0	18.0
SN74AHC1G08DCKTG4	SC70	DCK	5	250	180.0	180.0	18.0
SN74AHC1G08DRLR	SOT-5X3	DRL	5	4000	202.0	201.0	28.0

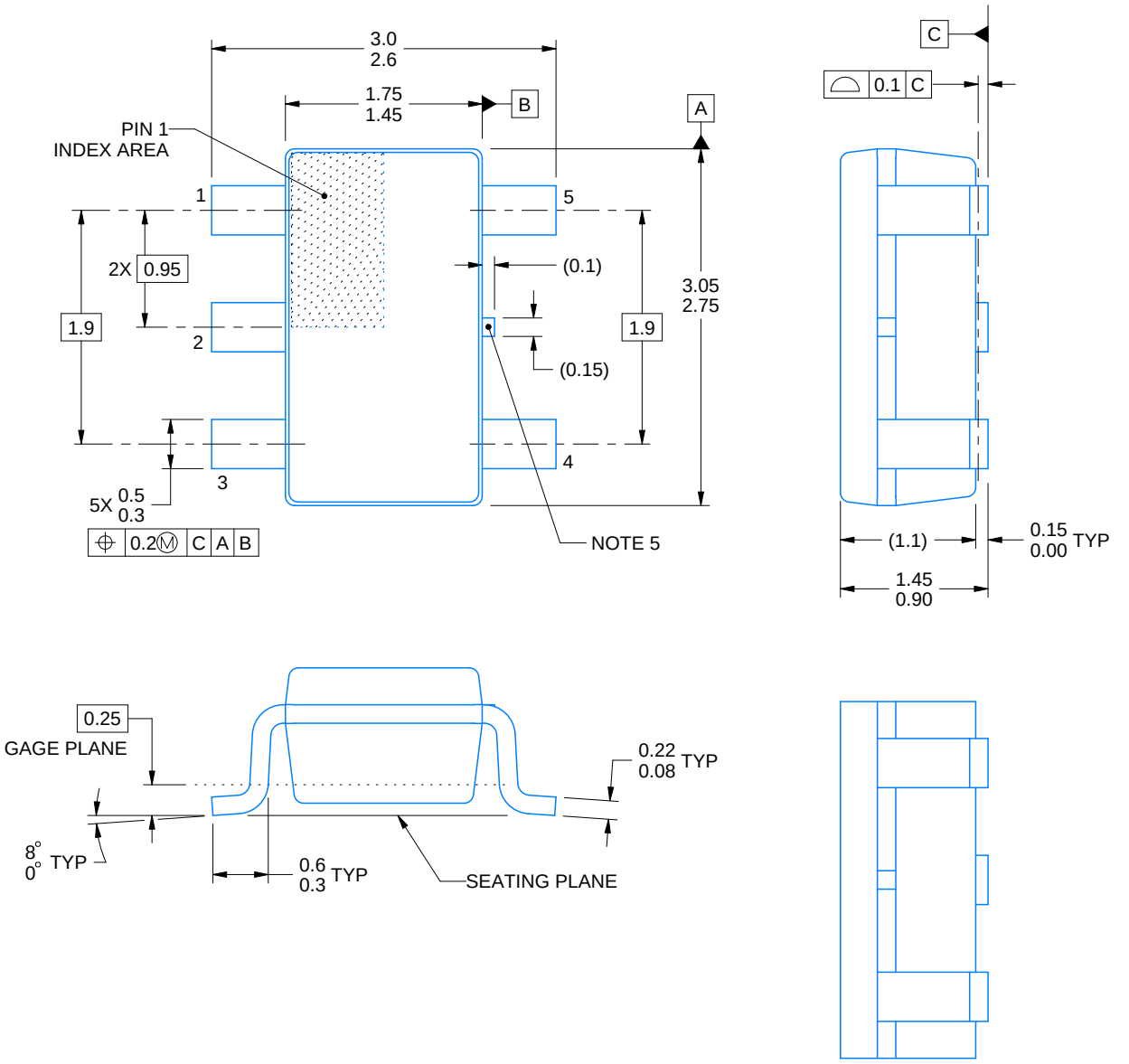

ALTERNATIVE PACKAGE SINGULATION VIEW

4214839/J 02/2024

NOTES:

1. All linear dimensions are in millimeters. Any dimensions in parenthesis are for reference only. Dimensioning and tolerancing per ASME Y14.5M.
2. This drawing is subject to change without notice.
3. Refernce JEDEC MO-178.
4. Body dimensions do not include mold flash, protrusions, or gate burrs. Mold flash, protrusions, or gate burrs shall not exceed 0.25 mm per side.
5. Support pin may differ or may not be present.

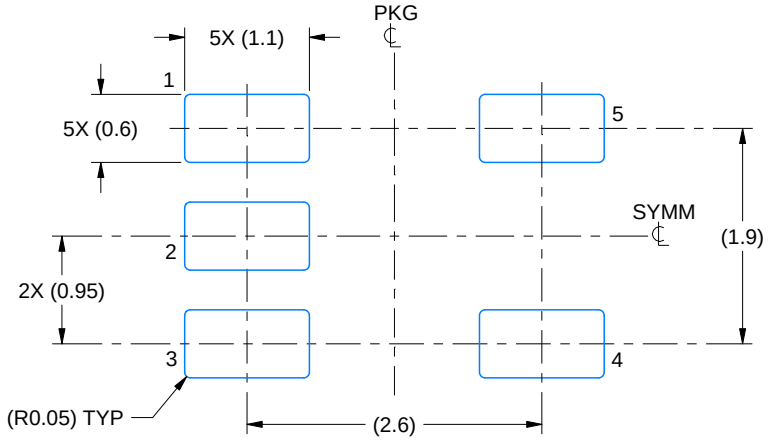

LAND PATTERN EXAMPLE
EXPOSED METAL SHOWN
SCALE:15X

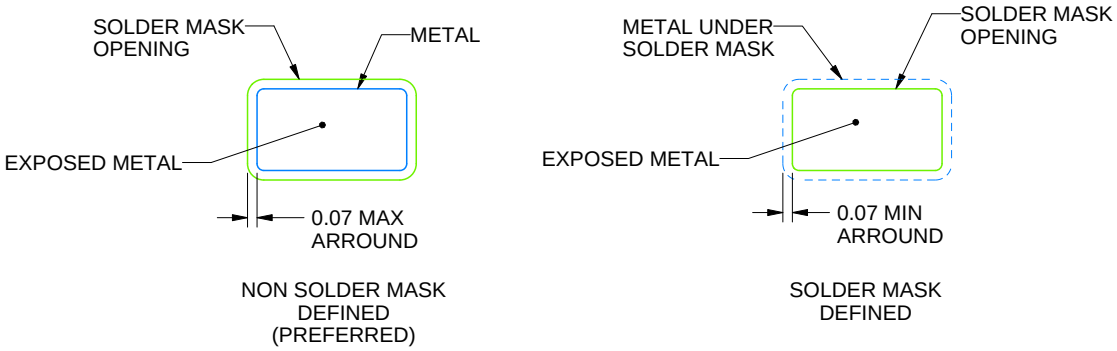

SOLDER MASK DETAILS

4214839/J 02/2024

NOTES: (continued)

6. Publication IPC-7351 may have alternate designs.
7. Solder mask tolerances between and around signal pads can vary based on board fabrication site.

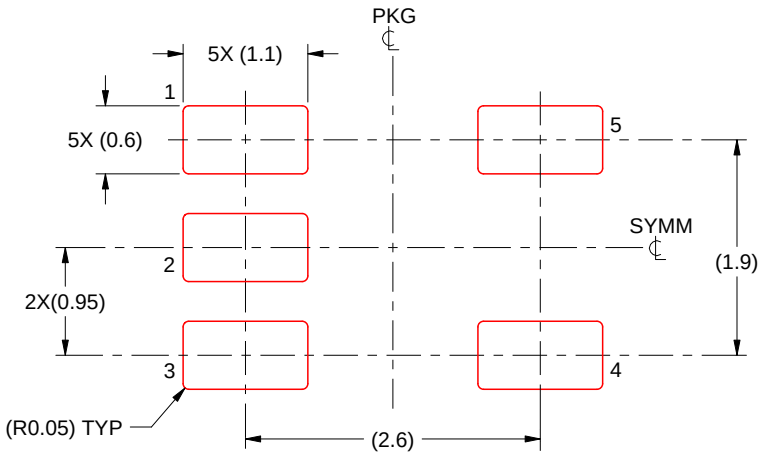

SOLDER PASTE EXAMPLE
BASED ON 0.125 mm THICK STENCIL
SCALE:15X

4214839/J 02/2024

NOTES: (continued)

8. Laser cutting apertures with trapezoidal walls and rounded corners may offer better paste release. IPC-7525 may have alternate design recommendations.
9. Board assembly site may have different recommendations for stencil design.

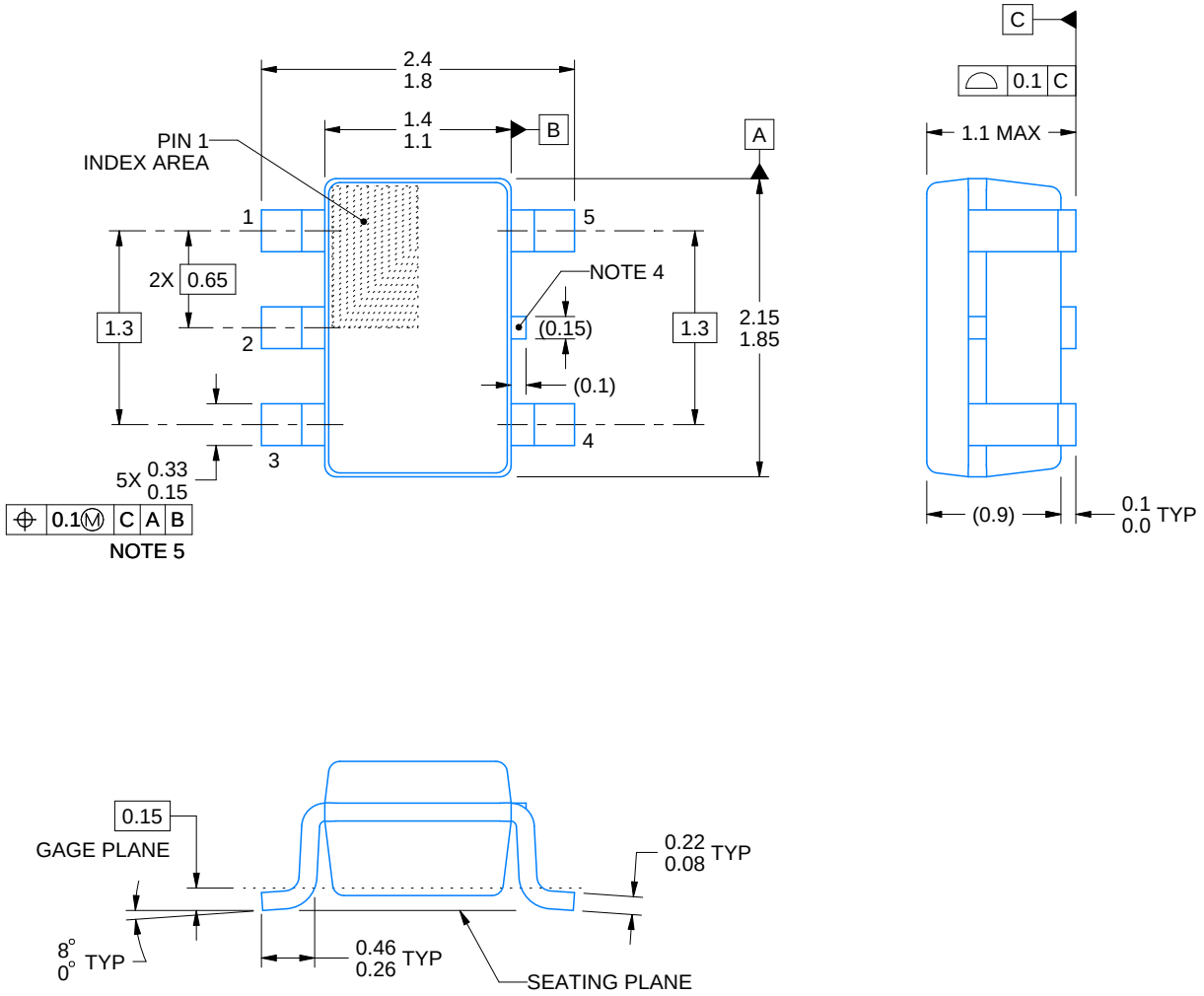

4214834/D 07/2023

NOTES:

1. All linear dimensions are in millimeters. Any dimensions in parenthesis are for reference only. Dimensioning and tolerancing per ASME Y14.5M.
2. This drawing is subject to change without notice.
3. Refernce JEDEC MO-203.
4. Support pin may differ or may not be present.
5. Lead width does not comply with JEDEC.

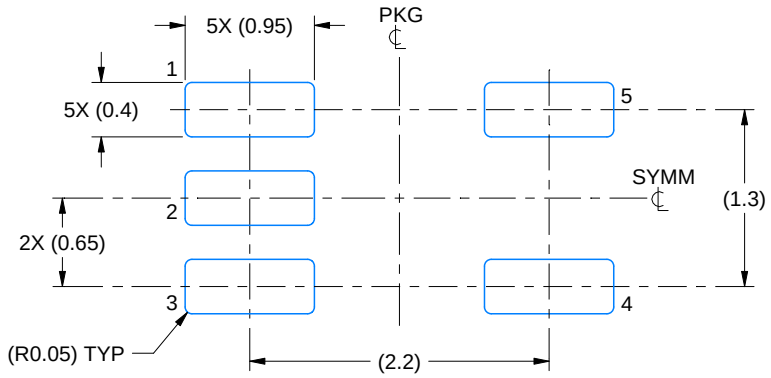

LAND PATTERN EXAMPLE
EXPOSED METAL SHOWN
SCALE:18X

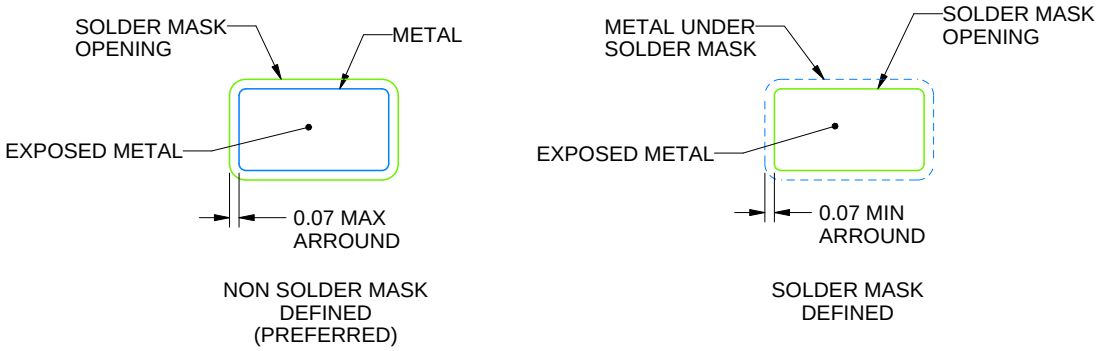

SOLDER MASK DETAILS

4214834/D 07/2023

NOTES: (continued)

6. Publication IPC-7351 may have alternate designs.
7. Solder mask tolerances between and around signal pads can vary based on board fabrication site.

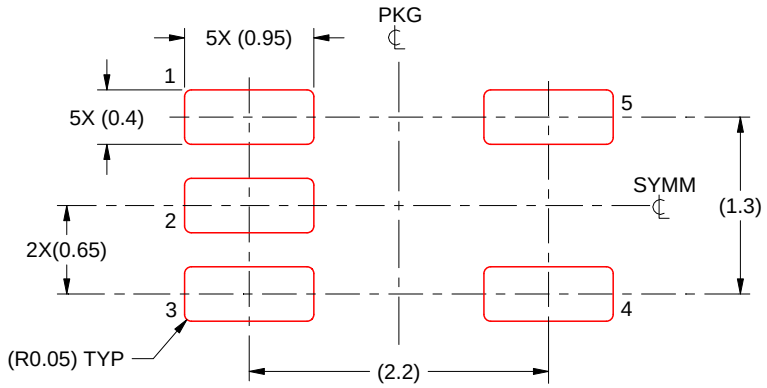

SOLDER PASTE EXAMPLE
BASED ON 0.125 THICK STENCIL
SCALE:18X

4214834/D 07/2023

NOTES: (continued)

8. Laser cutting apertures with trapezoidal walls and rounded corners may offer better paste release. IPC-7525 may have alternate design recommendations.
9. Board assembly site may have different recommendations for stencil design.

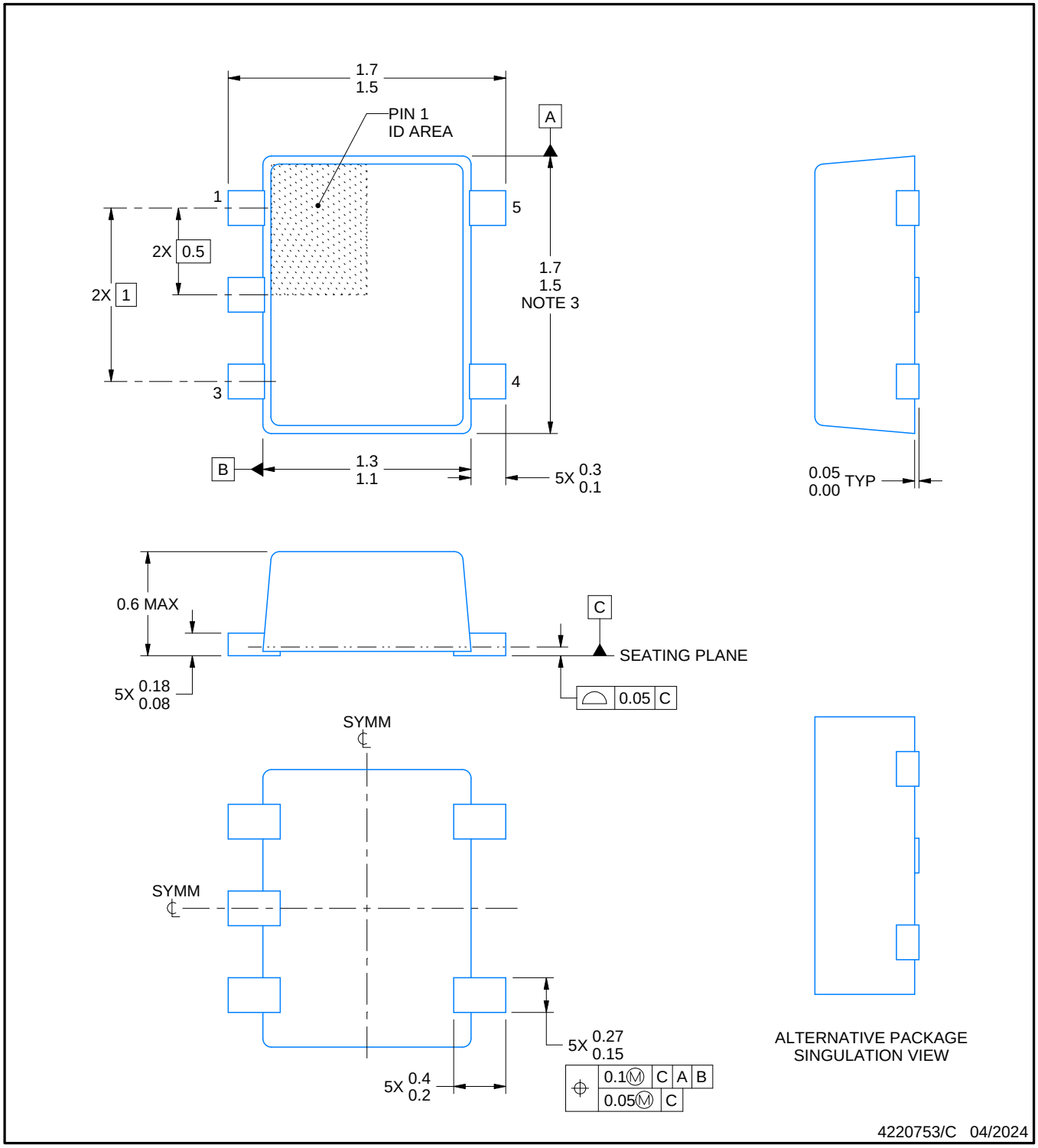

NOTES:

1. All linear dimensions are in millimeters. Any dimensions in parenthesis are for reference only. Dimensioning and tolerancing per ASME Y14.5M.
2. This drawing is subject to change without notice.
3. This dimension does not include mold flash, protrusions, or gate burrs. Mold flash, protrusions, or gate burrs shall not exceed 0.15 mm per side.
4. Reference JEDEC registration MO-293 Variation UAAD-1

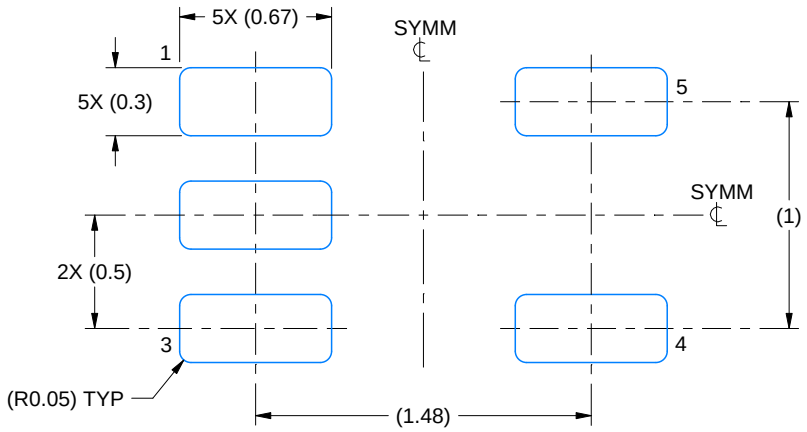

LAND PATTERN EXAMPLE
SCALE:30X

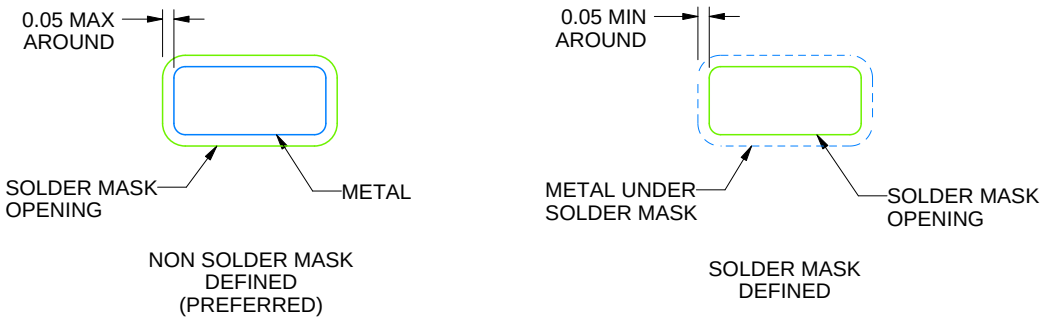

SOLDERMASK DETAILS

4220753/C 04/2024

NOTES: (continued)

5. Publication IPC-7351 may have alternate designs.
6. Solder mask tolerances between and around signal pads can vary based on board fabrication site.

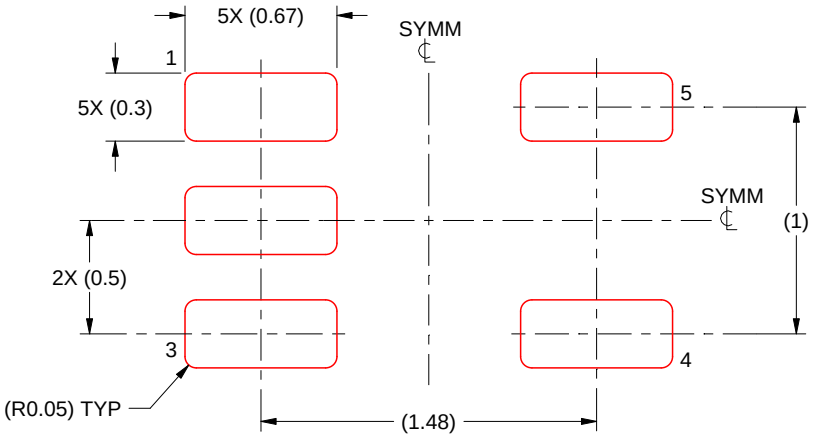

SOLDER PASTE EXAMPLE
BASED ON 0.1 mm THICK STENCIL
SCALE:30X

4220753/C 04/2024

NOTES: (continued)

7. Laser cutting apertures with trapezoidal walls and rounded corners may offer better paste release. IPC-7525 may have alternate design recommendations.
8. Board assembly site may have different recommendations for stencil design.

IMPORTANT NOTICE AND DISCLAIMER

TI PROVIDES TECHNICAL AND RELIABILITY DATA (INCLUDING DATA SHEETS), DESIGN RESOURCES (INCLUDING REFERENCE DESIGNS), APPLICATION OR OTHER DESIGN ADVICE, WEB TOOLS, SAFETY INFORMATION, AND OTHER RESOURCES “AS IS” AND WITH ALL FAULTS, AND DISCLAIMS ALL WARRANTIES, EXPRESS AND IMPLIED, INCLUDING WITHOUT LIMITATION ANY IMPLIED WARRANTIES OF MERCHANTABILITY, FITNESS FOR A PARTICULAR PURPOSE OR NON-INFRINGEMENT OF THIRD PARTY INTELLECTUAL PROPERTY RIGHTS.

These resources are intended for skilled developers designing with TI products. You are solely responsible for (1) selecting the appropriate TI products for your application, (2) designing, validating and testing your application, and (3) ensuring your application meets applicable standards, and any other safety, security, regulatory or other requirements.

These resources are subject to change without notice. TI grants you permission to use these resources only for development of an application that uses the TI products described in the resource. Other reproduction and display of these resources is prohibited. No license is granted to any other TI intellectual property right or to any third party intellectual property right. TI disclaims responsibility for, and you will fully indemnify TI and its representatives against, any claims, damages, costs, losses, and liabilities arising out of your use of these resources.

TI’s products are provided subject to TI’s Terms of Sale or other applicable terms available either on ti.com or provided in conjunction with such TI products. TI’s provision of these resources does not expand or otherwise alter TI’s applicable warranties or warranty disclaimers for TI products.

TI objects to and rejects any additional or different terms you may have proposed.

Mailing Address: Texas Instruments, Post Office Box 655303, Dallas, Texas 75265
Copyright © 2024, Texas Instruments Incorporated

Looking for pricing, stock, or lifecycle information?

Click below to explore more details on WIN SOURCE:

- View SN74AHC1G08DCKR on WIN SOURCE
- Texas Instruments Information

Optimize Your Supply Chain with WIN SOURCE Solutions

- Global Sourcing Solution
- Obsolete Management
- Cost Control Management
- Shortage Management
- Alternative Solution
- Excess Inventory Management