THE DATASHEET OF

SN65HVD08P

www.win-source.net 0086-755-83957316

SNx5HVD08 Wide Supply Range RS-485 Transceiver

1 Features

- Operates With a 3-V to 5.5-V Supply
- Consumes Less Than 90-mW Quiescent Power
- Open-Circuit, Short-Circuit, and Idle-Bus Failsafe Receiver
- 1/8th Unit-Load (up to 256 nodes on the bus)
- Bus-Pin ESD Protection Exceeds 16-kV HBM
- Driver Output Voltage Slew-Rate Limited for Optimum Signal Quality at 10 Mbps
- Electrically Compatible With ANSI TIA/EIA-485 Standard

2 Applications

- Data Transmission With Remote Stations Powered From the Host
- Isolated Multipoint Data Buses
- Industrial Process Control Networks
- Point-of-Sale Networks
- Electric Utility Metering

3 Description

The SN65HVD08 combines a 3-state differential line driver and differential line receiver designed for balanced data transmission and interoperation with ANSI TIA/EIA-485-A and ISO-8482E standard-compliant devices.

The wide supply voltage range and low quiescent current requirements allow the SN65HVD08s to operate from a 5-V power bus in the cable with as much as a 2-V line voltage drop. Busing power in the cable can alleviate the need for isolated power to be generated at each connection of a ground-isolated bus.

The driver differential outputs and receiver differential inputs connect internally to form a differential input/output (I/O) bus port that is designed to offer minimum loading to the bus whenever the driver is disabled or not powered. The drivers and receivers have active-high and active-low enables respectively, which can be externally connected together to function as a direction control.

Device Information(1)

PART NUMBER	PACKAGE	BODY SIZE (NOM)
SN75HVD08, SN65HVD08	SOIC (8)	4.90 mm × 3.91 mm
	PDIP (8)	9.81 mm × 6.35 mm

(1) For all available packages, see the orderable addendum at the end of the datasheet.

Typical Application Schematic

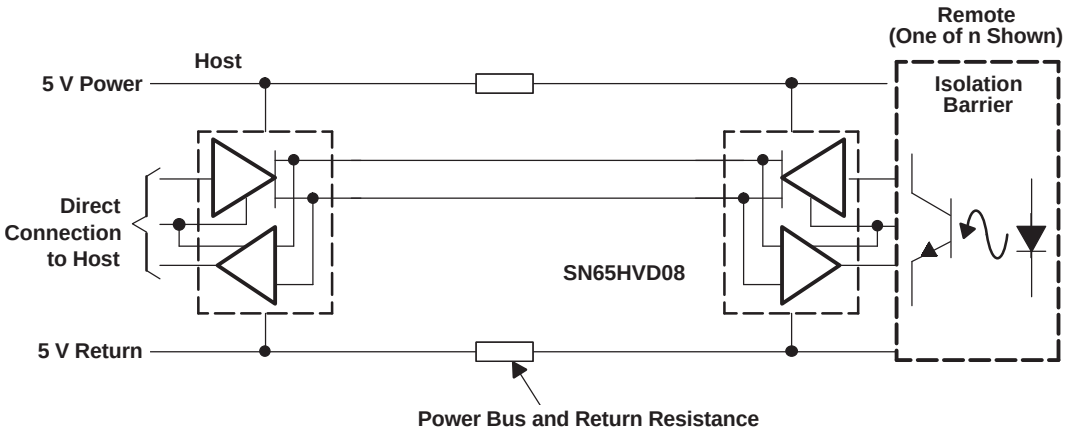

An IMPORTANT NOTICE at the end of this data sheet addresses availability, warranty, changes, use in safety-critical applications, intellectual property matters and other important disclaimers. PRODUCTION DATA.

Table of Contents

1 Features ... 1
2 Applications ... 1
3 Description ... 1
4 Revision History ... 2
5 Pin Configuration and Functions ... 3
6 Specifications ... 3
6.1 Absolute Maximum Ratings ... 3
6.2 ESD Ratings ... 3
6.3 Recommended Operating Conditions ... 4
6.4 Thermal Information ... 4
6.5 Electrical Characteristics ... 4
6.6 Driver Switching Characteristics ... 5
6.7 Receiver Switching Characteristics ... 5
6.8 Typical Characteristics ... 7
7 Parameter Measurement Information ... 8
8 Detailed Description ... 12
8.1 Overview ... 12
8.2 Functional Block Diagram ... 12
8.3 Feature Description ... 12
8.4 Device Functional Modes ... 12
9 Application and Implementation ... 14
9.1 Application Information ... 14
9.2 Typical Application ... 17
10 Power Supply Recommendations ... 20
11 Layout ... 20
11.1 Layout Guidelines ... 20
11.2 Layout Example ... 20
12 Device and Documentation Support ... 21
12.1 Device Support ... 21
12.2 Related Links ... 21
12.3 Community Resources ... 21
12.4 Trademarks ... 21
12.5 Electrostatic Discharge Caution ... 21
12.6 Glossary ... 21
13 Mechanical, Packaging, and Orderable Information ... 21

4 Revision History

Changes from Revision C (July 2006) to Revision D	Page
• Added *Pin Configuration and Functions* section, *ESD Ratings* table, *Feature Description* section, *Device Functional Modes*, *Application and Implementation* section, *Power Supply Recommendations* section, *Layout* section, *Device and Documentation Support* section, and *Mechanical, Packaging, and Orderable Information* section	1

Copyright © 2002–2015, Texas Instruments Incorporated

5 Pin Configuration and Functions

D or P Package
8-Pin SOIC or PDIP
Top View

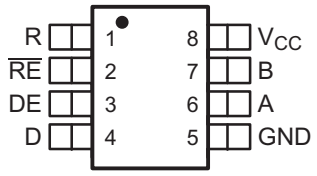

Pin Functions

PIN		TYPE	DESCRIPTION
NAME	NO.		
A	6	Bus input / output	Driver output and receiver input (complementary to B)
B	7	Bus input / output	Driver output and receiver input (complementary to A)
D	4	Digital input	Driver data input
DE	3	Digital input	Driver enable high
GND	5	Reference potential	Local device ground
R	1	Digital output	Receive data output
$\overline{RE}$	2	Digital input	Receiver enable low
V_{CC}	8	Supply	3-V to 5.5-V supply

6 Specifications

6.1 Absolute Maximum Ratings

over operating free-air temperature range unless otherwise noted(1) (2)

	MIN	MAX	UNIT
Supply voltage, V_{CC}	–0.3	6	V
Voltage at A or B	–9	14	V
Input voltage at D, DE, R or $\overline{RE}$	–0.5	V_{CC} + 0.5	V
Voltage input, transient pulse, A and B, through 100 Ω	–25	25	V
Receiver ouput current, I_O	–11	11	mA
Maximum Junction Temperature, T_J		150	°C
Storage Temperature, T_{STG}	–65	150	°C

(1) Stresses beyond those listed under *Absolute Maximum Ratings* may cause permanent damage to the device. These are stress ratings only, which do not imply functional operation of the device at these or any other conditions beyond those indicated under *Recommended Operating Conditions*. Exposure to absolute-maximum-rated conditions for extended periods may affect device reliability.
(2) All voltage values, except differential I/O bus voltages, are with respect to network ground terminal.

6.2 ESD Ratings

			VALUE	UNIT
$V_{(ESD)}$ Electrostatic discharge	Human body model (HBM), per ANSI/ESDA/JEDEC JS-001(1)	A, B, and GND	16000	V
		All pins	4000	
	Charged-device model (CDM), per JEDEC specification JESD22-C101(2)		1000	

(1) JEDEC document JEP155 states that 500-V HBM allows safe manufacturing with a standard ESD control process.
(2) JEDEC document JEP157 states that 250-V CDM allows safe manufacturing with a standard ESD control process.

6.3 Recommended Operating Conditions

		MIN	NOM	MAX	UNIT
Supply voltage, V_{CC}		3		5.5	V
Input voltage at any bus terminal (separately or common mode), V_I (1)		–7		12	V
High-level input voltage, V_{IH}	Driver, driver enable, and receiver enable inputs	2.25		V_{CC}	V
Low-level input voltage, V_{IL}	Driver, driver enable, and receiver enable inputs	0		0.8	V
Differential input voltage, V_{ID}		–12		12	
High-level output current, I_{OH}	Driver	–60			mA
	Receiver	–8			mA
Low-level output current, I_{OL}	Driver			60	mA
	Receiver			8	mA
Operating free-air temperature, T_A	SN75HVD08	0		70	°C
	SN65HVD08	–40		85	°C

(1) The algebraic convention, in which the least positive (most negative) limit is designated as minimum is used in this data sheet.

6.4 Thermal Information

THERMAL METRIC(1)		SN65HVD08, SN75HVD08		UNIT
		D (SOIC)	P (PDIP)	
		8 PINS	8 PINS	
$R_{\theta JA}$	Junction-to-ambient thermal resistance	175.4	125	°C/W
$R_{\theta JC(top)}$	Junction-to-case (top) thermal resistance	53.6	34.9	°C/W
$R_{\theta JB}$	Junction-to-board thermal resistance	45.1	23.7	°C/W
ψ_{JT}	Junction-to-top characterization parameter	10.1	12.1	°C/W
ψ_{JB}	Junction-to-board characterization parameter	44.4	23.6	°C/W

(1) For more information about traditional and new thermal metrics, see the *Semiconductor and IC Package Thermal Metrics* application report, SPRA953.

6.5 Electrical Characteristics

over recommended operating conditions unless otherwise noted

PARAMETER		TEST CONDITIONS	MIN	TYP	MAX	UNIT
$\|V_{OD}\|$	Driver differential output voltage magnitude	R_L= 60 Ω, 375 Ω on each output to -7 V to 12 V, See Figure 7	1.5		V_{CC}	V
$\Delta\|V_{OD}\|$	Change in magnitude of driver differential output voltage	R_L= 54 Ω	–0.2		0.2	V
$V_{OC(PP)}$	Peak-to-peak driver common-mode output voltage	Center of two 27-Ω load resistors, See Figure 8		0.5		V
V_{IT+}	Positive-going receiver differential input voltage threshold				–10	mV
V_{IT-}	Negative-going receiver differential input voltage threshold		–200			mV
V_{hys}	Receiver differential input voltage threshold hysteresis(V_{IT+} - V_{IT-})			35		mV
V_{OH}	Receiver high-level output voltage	I_{OH} = -8 mA	2.4			V
V_{OL}	Receiver low-level output voltage	I_{OL} = 8 mA			0.4	V
I_{IH}	Driver input, driver enable, and receiver enable high-level input current		–100		100	µA
I_{IL}	Driver input, driver enable, and receiver enable low-level input current		–100		100	µA
I_{OS}	Driver short-circuit output current	7 V < V_O < 12 V	–265		265	mA

Copyright © 2002–2015, Texas Instruments Incorporated

Electrical Characteristics (continued)

over recommended operating conditions unless otherwise noted

PARAMETER		TEST CONDITIONS	MIN	TYP	MAX	UNIT
I_I	Bus input current (disabled driver)	V_I = 12 V			130	µA
		V_I = -7 V	–100			
		V_I = 12 V, V_{CC} = 0 V			130	
		V_I = -7 V. V_{CC} = 0 V	–100			
I_{CC}	Supply current	Receiver enabled, driver disabled, no load			10	mA
		Driver enabled, receiver disabled, no load			16	
		Both disabled			5	µA
		Both enabled, no load			16	mA

6.6 Driver Switching Characteristics

over recommended operating conditions unless otherwise noted

PARAMETER		TEST CONDITIONS	MIN	TYP	MAX	UNIT
t_{PHL}	Driver high-to-low propagation delay time	R_L = 54 Ω, C_L = 50 pF,See Figure 9	18		40	ns
t_{PLH}	Driver low-to-high propagation delay time		18		40	
t_r	Driver 10%-to-90% differential output rise time		10		55	
t_f	Driver 90%-to-10% differential output fall time		10		55	
$t_{SK(P)}$	Driver differential output pulse skew, $\lvert t_{PHL} - t_{PLH}\rvert$				2.5	
t_{en}	Driver enable time	Receiver enabled, See Figures 4 and 5			55	ns
		Receiver disabled, See Figures 4 and 5			6	µs
t_{dis}	Driver disable time	Receiver enabled, See Figures 4 and 5			90	ns

6.7 Receiver Switching Characteristics

over recommended operating conditions unless otherwise noted

PARAMETER		TEST CONDITIONS	MIN	TYP	MAX	UNIT
t_{PHL}	Receiver high-to-low propagation delay time	C_L = 15 pF, See Figure 12			70	ns
t_{PLH}	Receiver low-to-high propagation delay time				70	
t_r	Receiver 10%-to-90% differential output rise time				5	
t_f	Receiver 90%-to-10% differential output fall time				5	
$t_{SK(P)}$	Receiver differential output pulse skew, $\lvert t_{PHL} - t_{PLH}\rvert$				4.5	
t_{en}	Receiver enable time	Driver enabled, See Figure 13			15	ns
		Driver disabled, See Figure 14			6	µs
t_{dis}	Receiver disable time	Driver enabled, See Figure 13			20	ns

Copyright © 2002–2015, Texas Instruments Incorporated

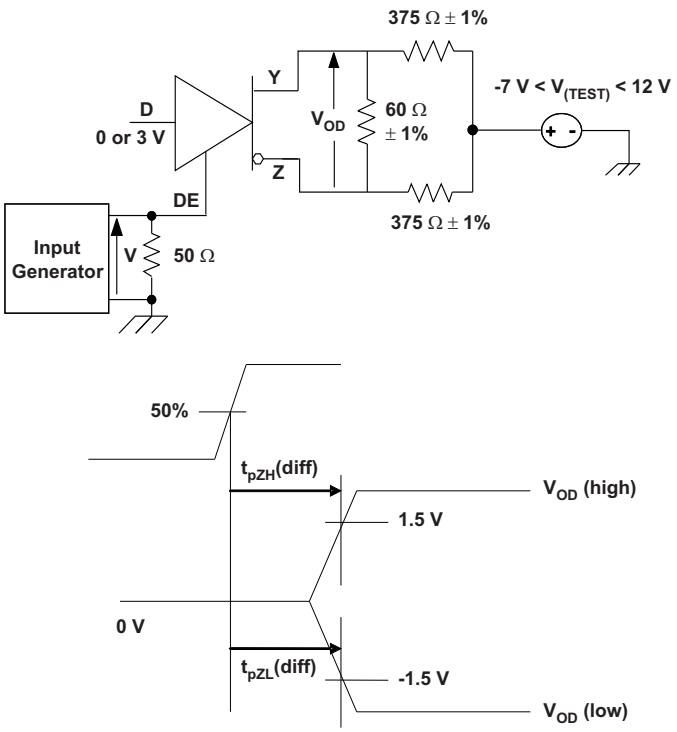

Figure 1. Driver Enable Time From DE to V_{OD}

The time $t_{pZL}(x)$ is the measure from DE to $V_{OD}(x)$. V_{OD} is valid when it is greater than 1.5 V.

Copyright © 2002–2015, Texas Instruments Incorporated

6.8 Typical Characteristics

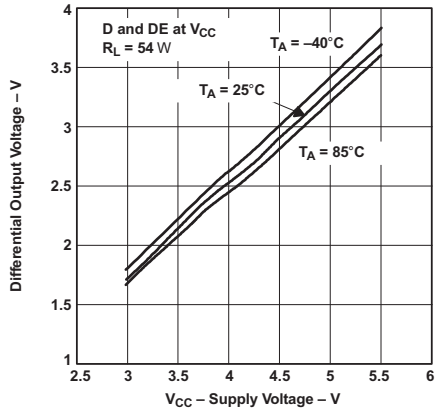

Figure 2. Differential Output Voltage vs Supply Voltage

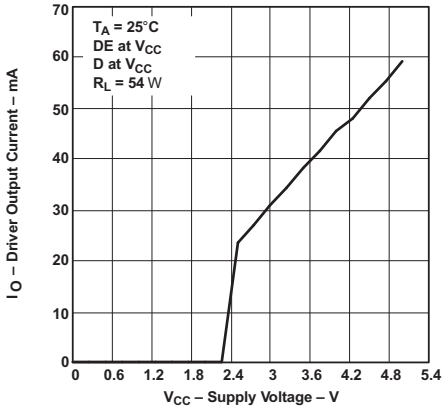

Figure 3. Driver Output Current vs Supply Voltage

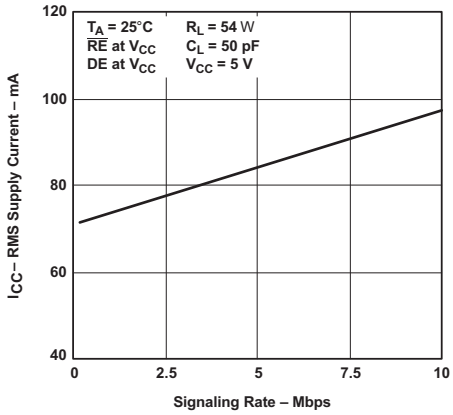

Figure 4. RMS Supply Current vs Signaling Rate

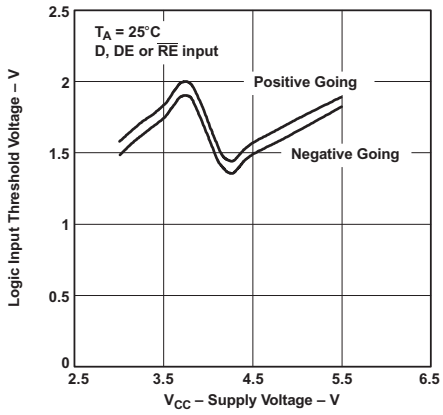

Figure 5. Logic Input Threshold Voltage vs Supply Voltage

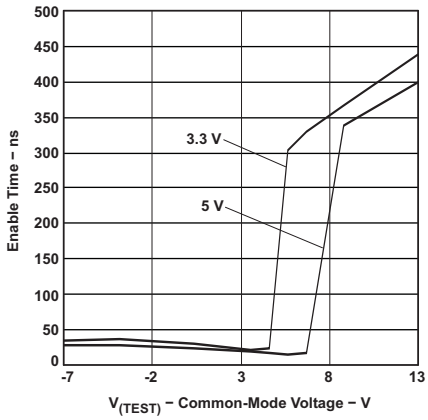

Figure 6. Enable Time vs Common-Mode Voltage (See Figure 1)

7 Parameter Measurement Information

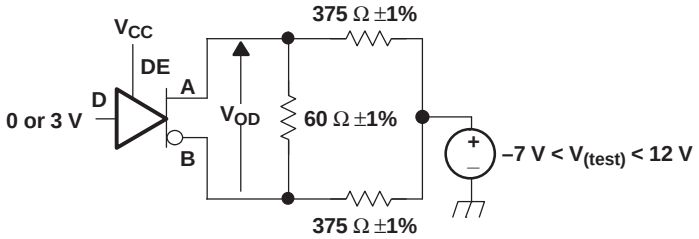

Figure 7. Driver V_{OD} With Common-Mode Loading Test Circuit

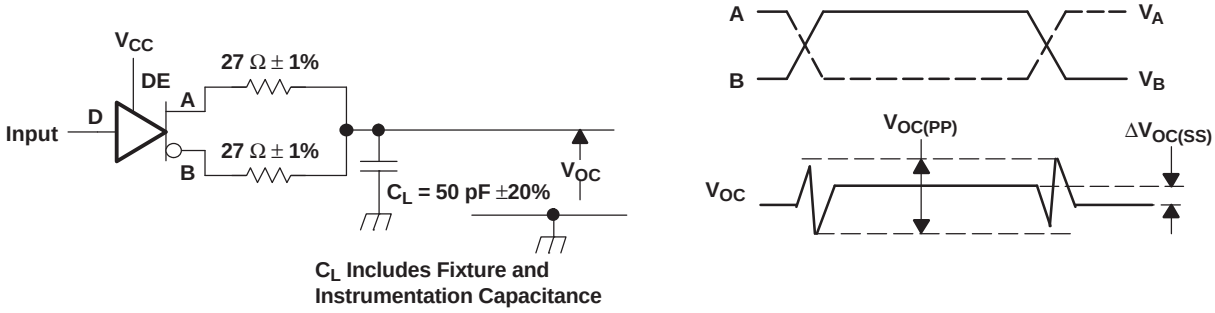

Input: PRR = 500 kHz, 50% Duty Cycle, t_r<6ns, t_f<6ns, Z_O = 50 Ω

Figure 8. Test Circuit and Definitions for the Driver Common-Mode Output Voltage

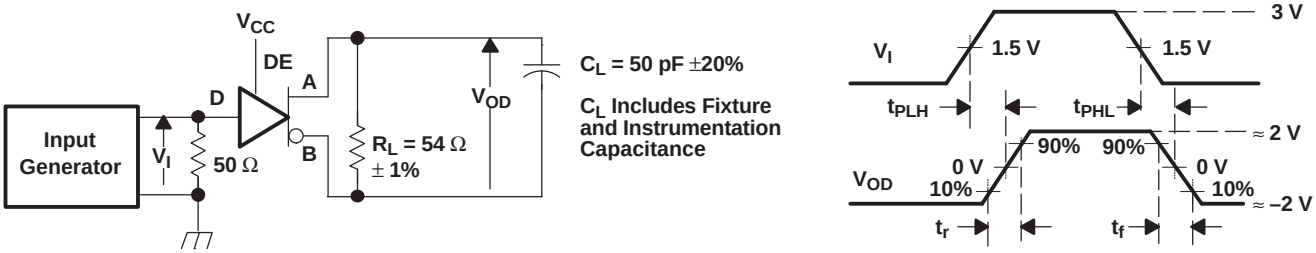

Generator: PRR = 500 kHz, 50% Duty Cycle, t_r <6 ns, t_f <6 ns, Z_o = 50 Ω

Figure 9. Driver Switching Test Circuit and Voltage Waveforms

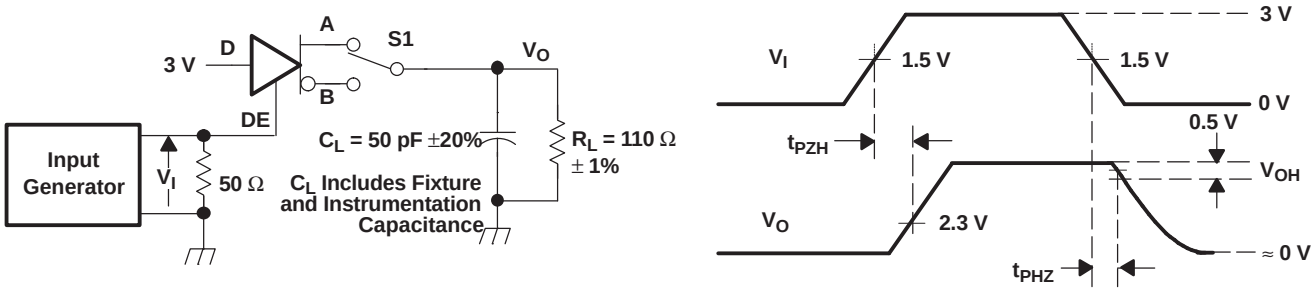

Generator: PRR = 500 kHz, 50% Duty Cycle, t_r <6 ns, t_f <6 ns, Z_o = 50 Ω

Figure 10. Driver High-Level Enable and Disable Time Test Circuit and Voltage Waveforms

Copyright © 2002–2015, Texas Instruments Incorporated

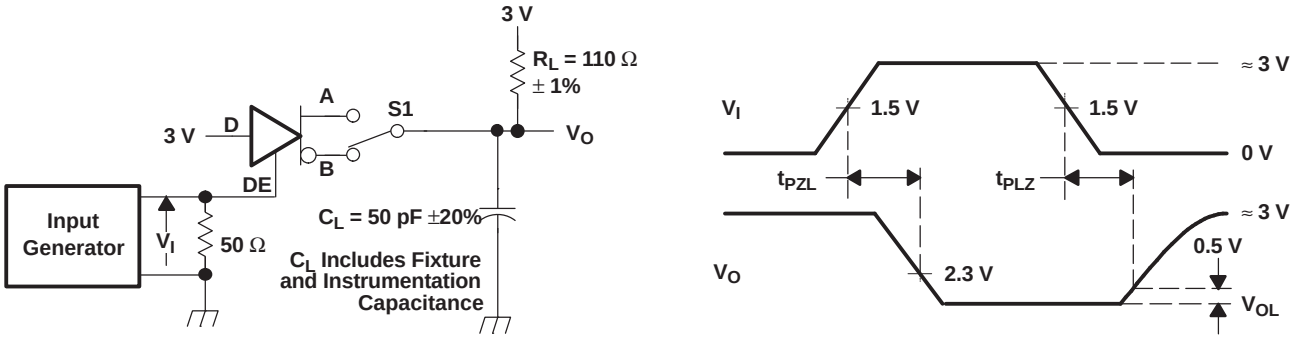

Generator: PRR = 500 kHz, 50% Duty Cycle, t_r <6 ns, t_f <6 ns, Z_o = 50 Ω

Figure 11. Driver Low-Level Output Enable and Disable Time Test Circuit and Voltage Waveforms

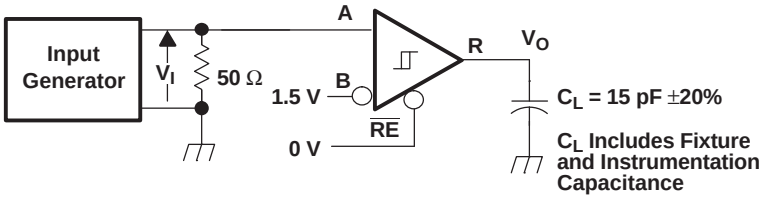

Generator: PRR = 500 kHz, 50% Duty Cycle, t_r <6 ns, t_f <6 ns, Z_o = 50 Ω

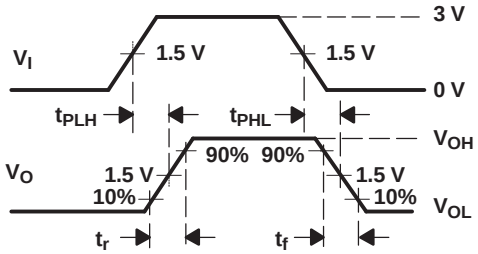

Figure 12. Receiver Switching Test Circuit and Voltage Waveforms

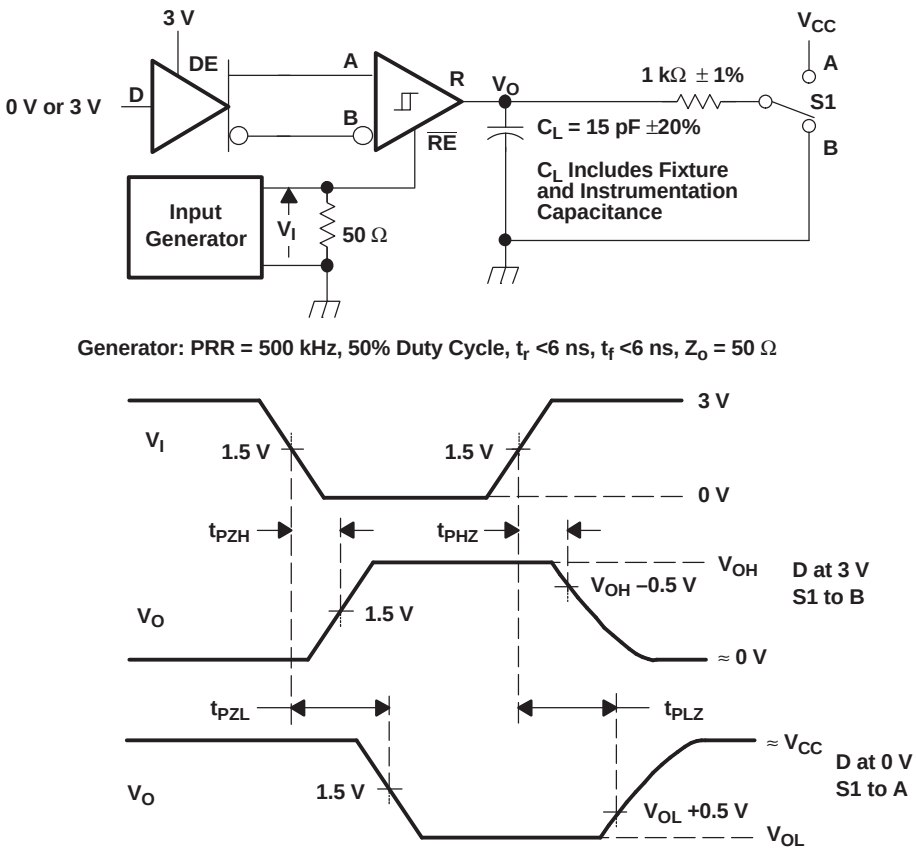

Figure 13. Receiver Enable and Disable Time Test Circuit and Voltage Waveforms With Drivers Enabled

Copyright © 2002–2015, Texas Instruments Incorporated

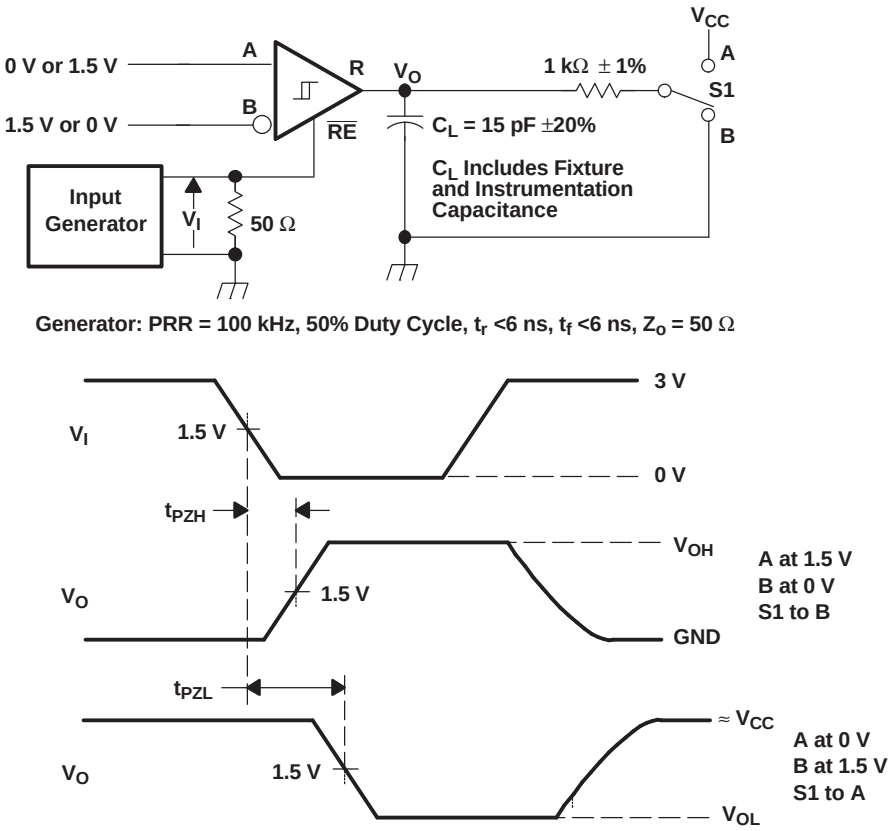

Figure 14. Receiver Enable Time From Standby (Driver Disabled)

8 Detailed Description

8.1 Overview

The SNx5HVD08 is a 3-V to 5.5-V, half-duplex, RS-485 transceiver suitable for data transmission up to 10 Mbps.

This device has an active-high driver enable and active-low receiver enable. A standby current of less than 5 µA can be achieved by disabling both driver and receiver.

Device operation is specified over a wide temperature range from -40°C to +85°C.

8.2 Functional Block Diagram

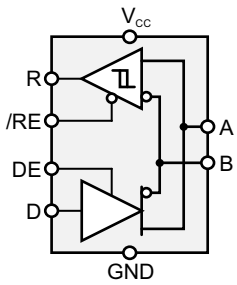

Figure 15. Logic Diagram (Positive)

8.3 Feature Description

Internal ESD protection circuits protect the transceiver bus terminals against ±16 kV Human Body Model (HBM) electrostatic discharges and all other pins up to ±4 kV.

The SNx5HVD08 provides internal biasing of the receiver input thresholds for open-circuit, bus-idle, or short-circuit failsafe conditions, and a typical receiver hysteresis of 35 mV.

8.4 Device Functional Modes

Table 1. Function Table: Driver

INPUT	ENABLE	OUTPUTS	
D	DE	A	B
H	H	H	L
L	H	L	H
X	L	Z	Z
Open	H	H	L

Table 2. Function Table: Receiver

DIFFERENTIAL INPUTS	ENABLE(1)	OUTPUT(1)
$V_{ID} = V_A - V_B$	$\overline{RE}$	R
$V_{ID} \leq -0.2$ V	L	L
-0.2 V $< V_{ID} < -0.01$ V	L	?
-0.01 V $\leq V_{ID}$	L	H
X	H	Z
Open Circuit	L	H
Short Circuit	L	H

(1) H = high level; L = low level; Z = high impedance; X = irrelevant; ? = indeterminate

Copyright © 2002–2015, Texas Instruments Incorporated

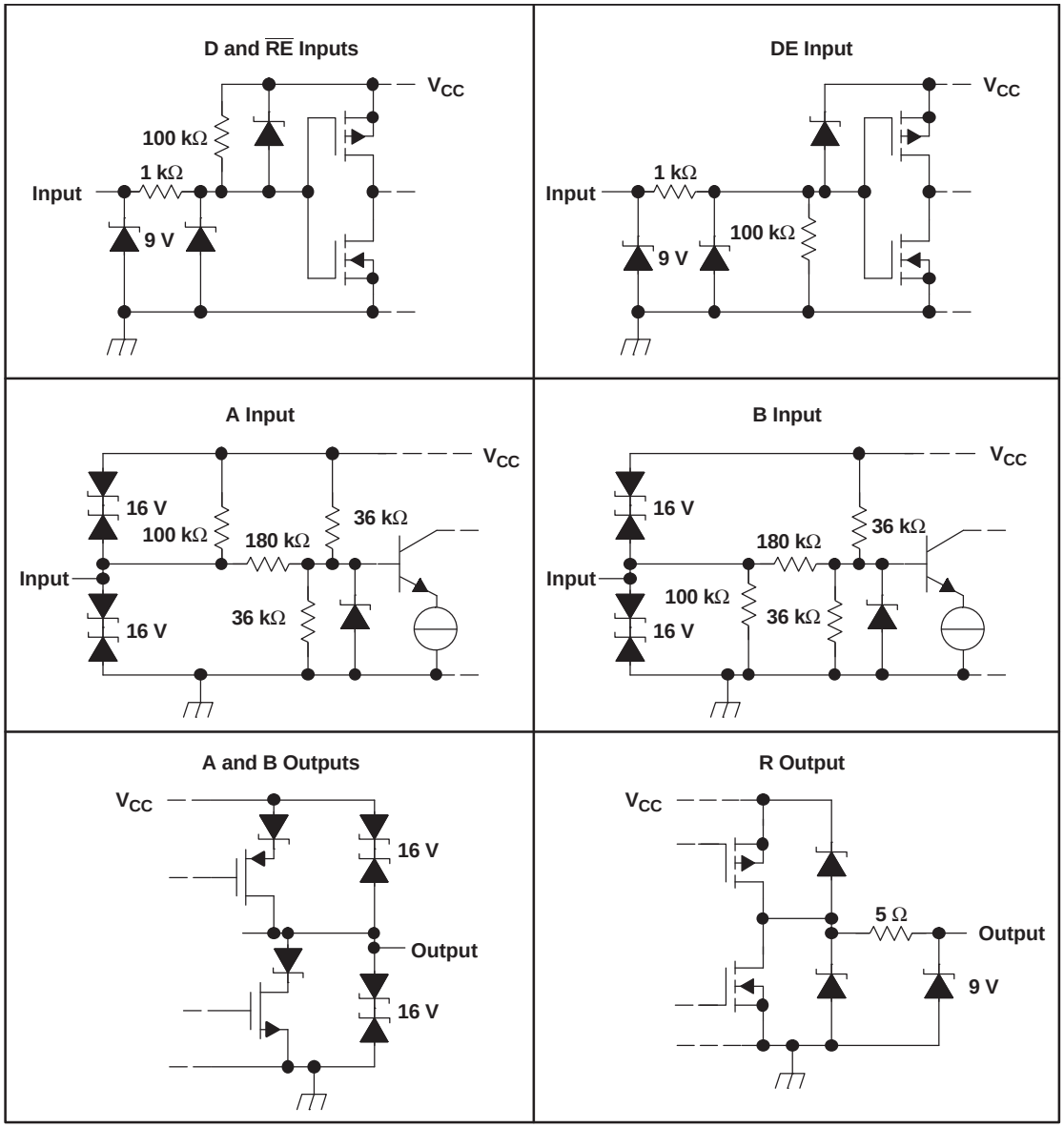

Figure 16. Equivalent Input and Output Schematic Diagrams

9 Application and Implementation

NOTE

Information in the following applications sections is not part of the TI component specification, and TI does not warrant its accuracy or completeness. TI's customers are responsible for determining suitability of components for their purposes. Customers should validate and test their design implementation to confirm system functionality.

9.1 Application Information

As electrical loads are physically distanced from their power source, the effects of supply and return line impedance and the resultant voltage drop must be accounted. If the supply regulation at the load cannot be maintained to the circuit requirements, it forces the use of remote sensing, additional regulation at the load, bigger or shorter cables, or a combination of these. The SN65HVD08 eases this problem by relaxing the supply requirements to allow for more variation in the supply voltage over typical RS-485 transceivers.

9.1.1 Supply Source Impedance

In the steady state, the voltage drop from the source to the load is simply the wire resistance times the load current as modeled in Figure 17.

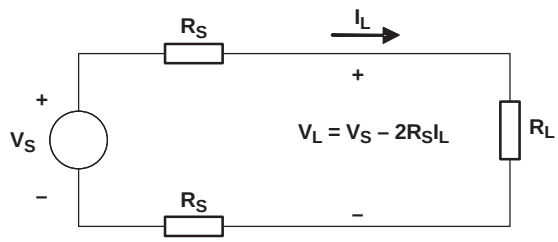

Figure 17. Steady-State Circuit Model

For example, if you were to provide 5-V ±5% supply power to a remote circuit with a maximum load requirement of 0.1 A (one SN65HVD08), the voltage at the load would fall below the 4.5-V minimum of most 5-V circuits with as little as 5.8 m of 28-GA conductors. Table 3 summarizes wire resistance and the length for 4.5 V and 3 V at the load with 0.1 A of load current. The maximum lengths would scale linearly for higher or lower load currents.

Table 3. Maximum Cable Lengths for Minimum Load Voltages at 0.1 A Load

WIRE SIZE	RESISTANCE	4.5-V LENGTH AT 0.1 A	3-V LENGTH AT 0.1 A
28 Gauge	0.213 Ω/m	5.8 m	41.1 m
24 Gauge	0.079 Ω/m	15.8 m	110.7 m
22 Gauge	0.054 Ω/m	23.1 m	162.0 m
20 Gauge	0.034 Ω/m	36.8 m	257.3 m
18 Gauge	0.021 Ω/m	59.5 m	416.7 m

Under dynamic load requirements, the distributed inductance and capacitance of the power lines may not be ignored and decoupling capacitance at the load is required. The amount depends upon the magnitude and frequency of the load current change but, if only powering the SN65HVD08, a 0.1 µF ceramic capacitor is usually sufficient.

9.1.2 Opto-Isolated Data Buses

Long RS-485 circuits can create large ground loops and pick up common-mode noise voltages in excess of the range tolerated by standard RS-485 circuits. A common remedy is to provide galvanic isolation of the data circuit from earth or local grounds.

Copyright © 2002–2015, Texas Instruments Incorporated

Application Information (continued)

Transformers, capacitors, or phototransistors most often provide isolation of the bus and the local node. Transformers and capacitors require changing signals to transfer the information over the isolation barrier and phototransistors (opto-isolators) can pass steady-state signals. Each of these methods incurs additional costs and complexity, the former in clock encoding and decoding of the data stream and the latter in requiring an isolated power supply.

Quite often, the cost of isolated power is repeated at each node connected to the bus as shown in Figure 18. The possibly lower-cost solution is to generate this supply once within the system and then distribute it along with the data line(s) as shown in Figure 19.

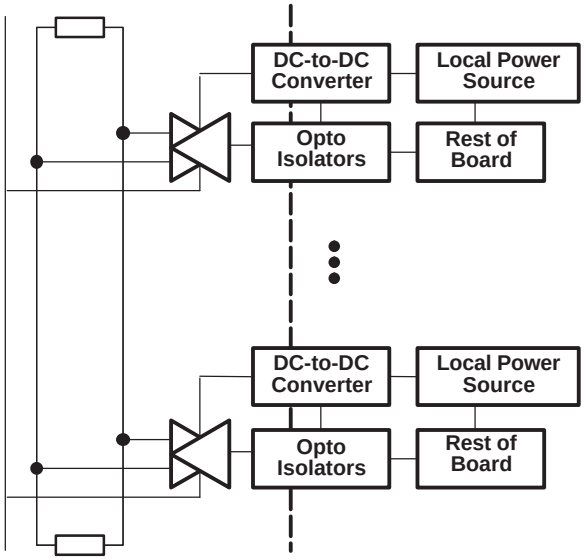

Figure 18. Isolated Power at Each Node

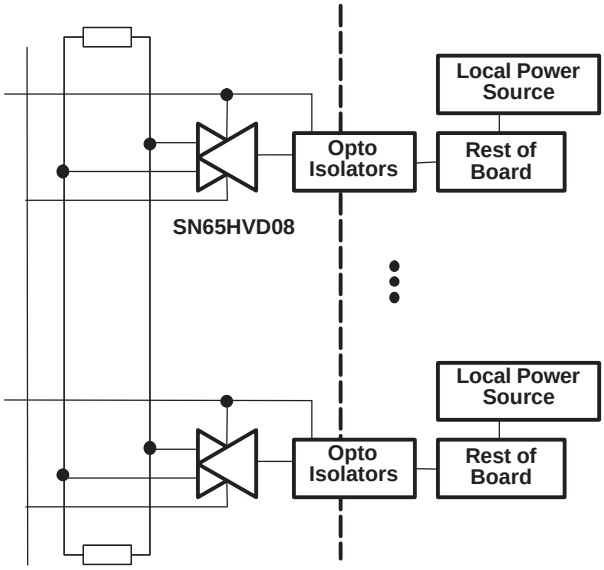

Figure 19. Distribution of Isolated Power

The features of the SN65HVD08 are particularly good for the application of Figure 19. Due to added supply source impedance, the low quiescent current requirements and wide supply voltage tolerance allow for the poorer load regulation.

Application Information (continued)

9.1.3 Opto Alternative

The ISO150 is a two-channel, galvanically isolated data coupler capable of data rates of 80 Mbps. Each channel can be individually programmed to transmit data in either direction.

Data is transmitted across the isolation barrier by coupling complementary pulses through high-voltage 0.4-pF capacitors. Receiver circuitry restores the pulses to standard logic levels. Differential signal transmission rejects isolation-mode voltage transients up to 1.6 kV/ms.

ISO150 avoids the problems commonly associated with opto-couplers. Optically-isolated couplers require high current pulses and allowance must be made for LED aging. The ISO150's Bi-CMOS circuitry operates at 25 mW per channel with supply voltage range matching that of the SN65HVD08 of 3 V to 5.5 V.

Figure 20 shows a typical circuit.

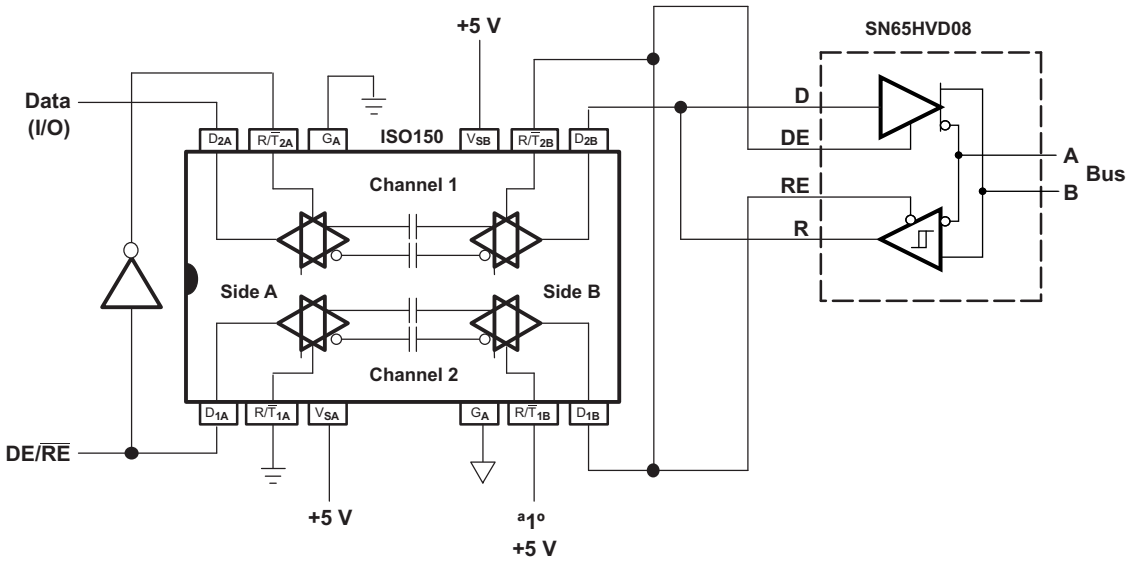

Figure 20. Isolated RS-485 Interface

Copyright © 2002–2015, Texas Instruments Incorporated

9.2 Typical Application

An RS-485 bus consists of multiple transceivers connecting in parallel to a bus cable. To eliminate line reflections, each cable end is terminated with a termination resistor, R_T, whose value matches the characteristic impedance, Z_0, of the cable. This method, known as parallel termination, allows for higher data rates over longer cable length.

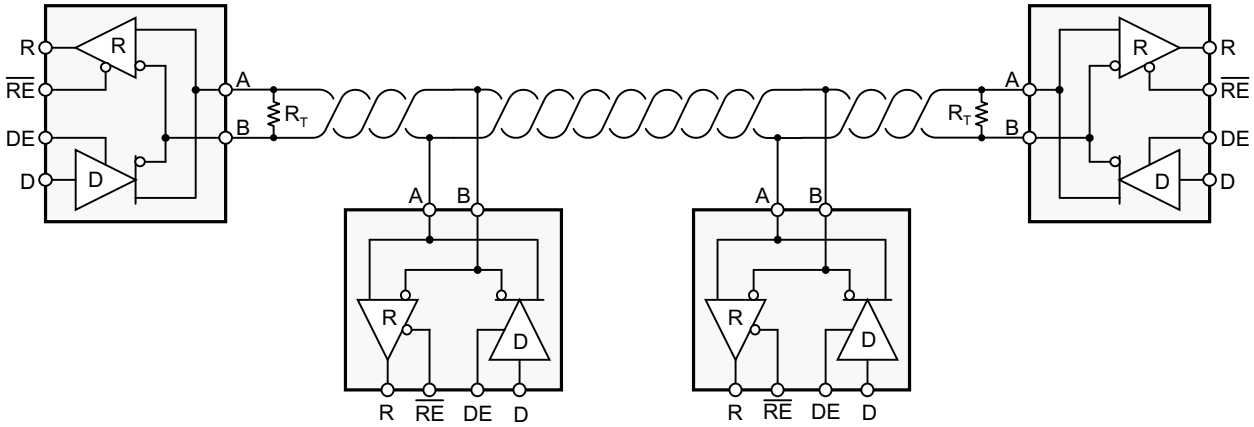

Figure 21. Typical Application Diagram

9.2.1 Design Requirements

RS-485 is a robust electrical standard suitable for long-distance networking that may be used in a wide range of applications with varying requirements, such as distance, data rate, and number of nodes.

9.2.1.1 Data Rate and Bus Length

There is an inverse relationship between data rate and bus length, meaning the higher the data rate, the shorter the cable length; and conversely, the lower the data rate, the longer the cable may be without introducing data errors. While most RS-485 systems use data rates between 10 kbps and 100 kbps, some applications require data rates up to 250 kbps at distances of 4000 feet and longer. Longer distances are possible by allowing for small signal jitter of up to 5 or 10%.

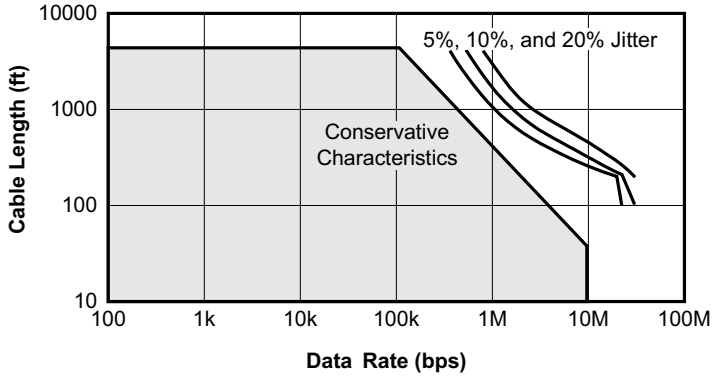

Figure 22. Cable Length vs Data Rate Characteristic

Typical Application (continued)

9.2.1.2 Stub Length

When connecting a node to the bus, the distance between the transceiver inputs and the cable trunk, known as the stub, should be as short as possible. Stubs present a non-terminated piece of bus line which can introduce reflections as the length of the stub increases. As a general guideline, the electrical length, or round-trip delay, of a stub should be less than one-tenth of the rise time of the driver, thus giving a maximum physical stub length as shown in Equation 1.

$$L_{stub} \leq 0.1 \times t_r \times v \times c \quad (1)$$

Where:

- t_r is the 10/90 rise time of the driver
- c is the speed of light (3×10^8 m/s)
- v is the signal velocity of the cable or trace as a factor of c

Per Equation 1, the maximum recommended stub length for the minimum driver output rise time of the SNx5HVD08 for a signal velocity of 78% is 0.23 meters (0.75 feet).

9.2.1.3 Bus Loading

The RS-485 standard specifies that a compliant driver must be able to driver 32 unit loads (UL), where 1 unit load represents a load impedance of approximately 12 kΩ. Because the SN65HVD08 and SN75HVD08 are each 1/8 UL transceivers, it is possible to connect up to 256 receivers to the bus.

9.2.1.4 Receiver Failsafe

The differential receivers of the SNx5HVD08 family are “failsafe” to invalid bus states caused by:

- Open bus conditions, such as a disconnected connector
- Shorted bus conditions, such as cable damage shorting the twisted-pair together
- Idle bus conditions that occur when no driver on the bus is actively driving

In any of these cases, the differential receiver will output a failsafe logic High state so that the output of the receiver is not indeterminate.

Receiver failsafe is accomplished by offsetting the receiver thresholds such that the “input indeterminate” range does not include zero volts differential.

In order to comply with the RS-422 and RS-485 standards, the receiver output must output a High when the differential input VID is more positive than +200 mV, and must output a Low when VID is more negative than -200 mV. The receiver parameters which determine the failsafe performance are VIT(+) and VIT(-).

As shown in the Electrical Characteristics table, differential signals more negative than -200 mV will always cause a Low receiver output, and differential signals more positive than -10 mV will always cause a High receiver output. Thus, when the differential input signal is close to zero, it is still above the maximum VIT(+) threshold of -10 mV, and the receiver output will be High.

Copyright © 2002–2015, Texas Instruments Incorporated

Typical Application (continued)

9.2.2 Detailed Design Procedure

In order to protect bus nodes against high-energy transients, the implementation of external transient protection devices is necessary.

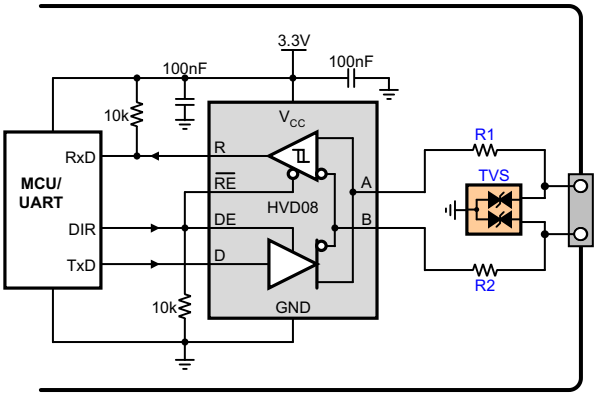

Figure 23. Transient protection against ESD, EFT, and Surge transients

Figure 23 suggests a protection circuit against 10 kV ESD (IEC 61000-4-2), 4 kV EFT (IEC 61000-4-4), and 1 kV surge (IEC 61000-4-5) transients. Table 4 shows the associated Bill of Materials.

Table 4. Bill of Materials

DEVICE	FUNCTION	ORDER NUMBER	MANUFACTURER
XCVR	3.3 V to 5 V, 10 Mbps RS-485 Transceiver	SNx5HVD08	TI
R1, R2	10 Ω, Pulse-Proof Thick-Film Resistor	CRCW0603010RJNEAHP	Vishay
TVS	Bidirectional 400 W Transient Suppressor	CDSOT23-SM712	Bourns

9.2.3 Application Curve

Figure 24 demonstrates operation of the SN65HVD08 at a signaling rate of 10 Mbps.

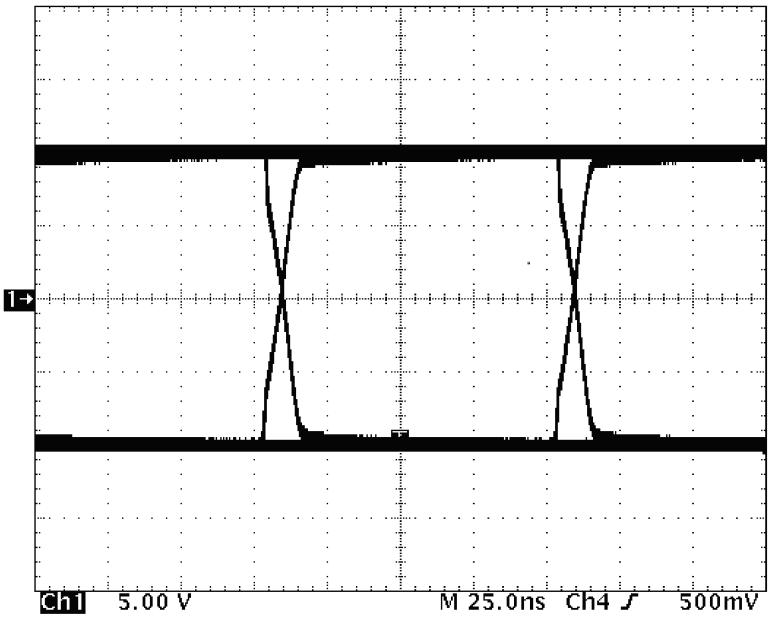

Figure 24. SNx5HVD08 Differential Output Waveform

10 Power Supply Recommendations

To ensure reliable operation at all data rates and supply voltages, each supply should be buffered with a 100-nF ceramic capacitor located as close to the supply pins as possible. The TPS76333 and TPS76350 are linear voltage regulators suitable for 3.3 V and 5 V supplies respectively.

11 Layout

11.1 Layout Guidelines

On-chip IEC-ESD protection is sufficient for laboratory and portable equipment but insufficient for EFT and surge transients occurring in industrial environments. Therefore, robust and reliable bus node design requires the use of external transient protection devices.

Because ESD and EFT transients have a wide frequency bandwidth from approximately 3 MHz to 3 GHz, high frequency layout techniques must be applied during PCB design.

1. Place the protection circuitry close to the bus connector to prevent noise transients from entering the board.
2. Use VCC and ground planes to provide low-inductance. Note that high-frequency currents follow the path of least inductance and not the path of least impedance.
3. Design the protection components into the direction of the signal path. Do not force the transient currents to divert from the signal path to reach the protection device.
4. Apply 100-nF to 220-nF bypass capacitors as close as possible to the VCC-pins of transceiver, UART, or controller ICs on the board.
5. Use at least two vias for VCC and ground connections of bypass capacitors and protection devices to minimize effective via-inductance.
6. Use 1-kΩ to 10-kΩ pullup and pulldown resistors for enable lines to limit noise currents in these lines during transient events.
7. Insert series pulse-proof resistors into the A and B bus lines if the TVS clamping voltage is higher than the specified maximum voltage of the transceiver bus terminals. These resistors limit the residual clamping current into the transceiver and prevent it from latching up.
8. While pure TVS protection is sufficient for surge transients up to 1 kV, higher transients require metal-oxide varistors (MOVs) which reduce the transients to a few hundred volts of clamping voltage, and transient blocking units (TBUs) that limit transient current to less than 1 mA.

11.2 Layout Example

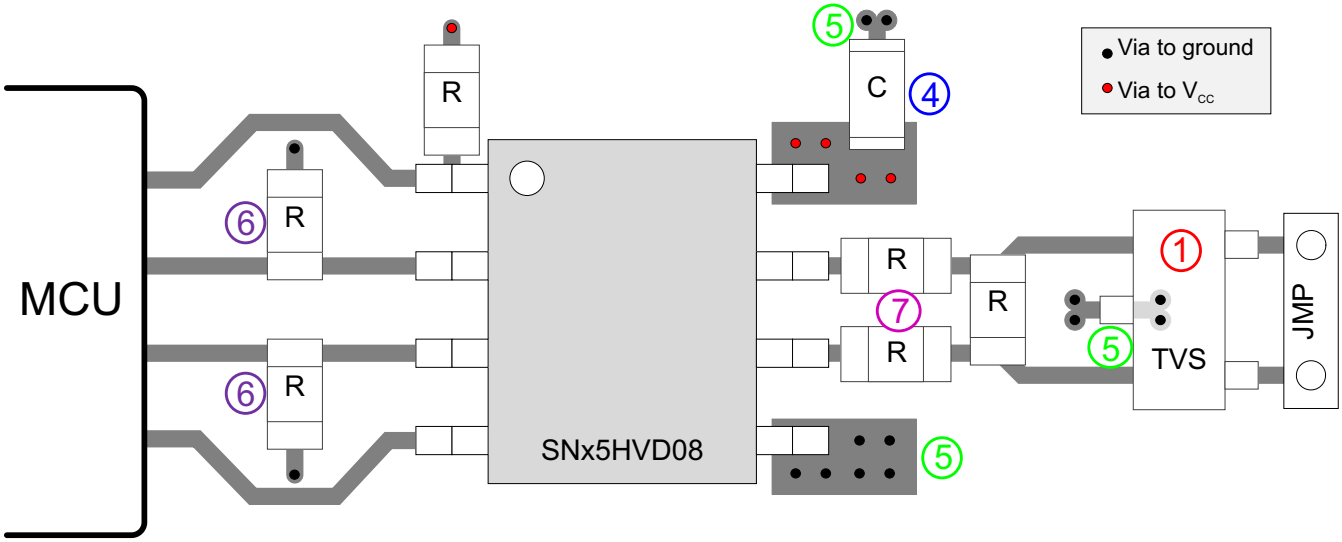

Figure 25. SNx5HVD08 Layout example

Copyright © 2002–2015, Texas Instruments Incorporated

12 Device and Documentation Support

12.1 Device Support

12.1.1 Third-Party Products Disclaimer

TI'S PUBLICATION OF INFORMATION REGARDING THIRD-PARTY PRODUCTS OR SERVICES DOES NOT CONSTITUTE AN ENDORSEMENT REGARDING THE SUITABILITY OF SUCH PRODUCTS OR SERVICES OR A WARRANTY, REPRESENTATION OR ENDORSEMENT OF SUCH PRODUCTS OR SERVICES, EITHER ALONE OR IN COMBINATION WITH ANY TI PRODUCT OR SERVICE.

12.2 Related Links

The table below lists quick access links. Categories include technical documents, support and community resources, tools and software, and quick access to sample or buy.

Table 5. Related Links

PARTS	PRODUCT FOLDER	SAMPLE & BUY	TECHNICAL DOCUMENTS	TOOLS & SOFTWARE	SUPPORT & COMMUNITY
SN75HVD08	Click here	Click here	Click here	Click here	Click here
SN65HVD08	Click here	Click here	Click here	Click here	Click here

12.3 Community Resources

The following links connect to TI community resources. Linked contents are provided "AS IS" by the respective contributors. They do not constitute TI specifications and do not necessarily reflect TI's views; see TI's Terms of Use.

TI E2E™ Online Community ***TI's Engineer-to-Engineer (E2E) Community.*** Created to foster collaboration among engineers. At e2e.ti.com, you can ask questions, share knowledge, explore ideas and help solve problems with fellow engineers.

Design Support ***TI's Design Support*** Quickly find helpful E2E forums along with design support tools and contact information for technical support.

12.4 Trademarks

E2E is a trademark of Texas Instruments.
All other trademarks are the property of their respective owners.

12.5 Electrostatic Discharge Caution

These devices have limited built-in ESD protection. The leads should be shorted together or the device placed in conductive foam during storage or handling to prevent electrostatic damage to the MOS gates.

12.6 Glossary

SLYZ022 — *TI Glossary*.

This glossary lists and explains terms, acronyms, and definitions.

13 Mechanical, Packaging, and Orderable Information

The following pages include mechanical, packaging, and orderable information. This information is the most current data available for the designated devices. This data is subject to change without notice and revision of this document. For browser-based versions of this data sheet, refer to the left-hand navigation.

PACKAGING INFORMATION

Orderable Device	Status (1)	Package Type	Package Drawing	Pins	Package Qty	Eco Plan (2)	Lead/Ball Finish (6)	MSL Peak Temp (3)	Op Temp (°C)	Device Marking (4/5)	Samples
SN65HVD08D	ACTIVE	SOIC	D	8	75	Green (RoHS & no Sb/Br)	CU NIPDAU	Level-1-260C-UNLIM	-40 to 85	VP08	Samples
SN65HVD08DG4	ACTIVE	SOIC	D	8	75	Green (RoHS & no Sb/Br)	CU NIPDAU	Level-1-260C-UNLIM	-40 to 85	VP08	Samples
SN65HVD08DR	ACTIVE	SOIC	D	8	2500	Green (RoHS & no Sb/Br)	CU NIPDAU	Level-1-260C-UNLIM	-40 to 85	VP08	Samples
SN65HVD08DRG4	ACTIVE	SOIC	D	8	2500	Green (RoHS & no Sb/Br)	CU NIPDAU	Level-1-260C-UNLIM	-40 to 85	VP08	Samples
SN65HVD08P	ACTIVE	PDIP	P	8	50	Green (RoHS & no Sb/Br)	CU NIPDAU	N / A for Pkg Type	-40 to 85	65HVD08	Samples
SN75HVD08D	ACTIVE	SOIC	D	8	75	Green (RoHS & no Sb/Br)	CU NIPDAU	Level-1-260C-UNLIM	0 to 70	VN08	Samples
SN75HVD08DG4	ACTIVE	SOIC	D	8	75	Green (RoHS & no Sb/Br)	CU NIPDAU	Level-1-260C-UNLIM	0 to 70	VN08	Samples
SN75HVD08DR	ACTIVE	SOIC	D	8	2500	Green (RoHS & no Sb/Br)	CU NIPDAU	Level-1-260C-UNLIM	0 to 70	VN08	Samples
SN75HVD08P	ACTIVE	PDIP	P	8	50	Green (RoHS & no Sb/Br)	CU NIPDAU	N / A for Pkg Type	0 to 70	75HVD08	Samples

(1) The marketing status values are defined as follows:
ACTIVE: Product device recommended for new designs.
LIFEBUY: TI has announced that the device will be discontinued, and a lifetime-buy period is in effect.
NRND: Not recommended for new designs. Device is in production to support existing customers, but TI does not recommend using this part in a new design.
PREVIEW: Device has been announced but is not in production. Samples may or may not be available.
OBSOLETE: TI has discontinued the production of the device.

(2) **RoHS:** TI defines "RoHS" to mean semiconductor products that are compliant with the current EU RoHS requirements for all 10 RoHS substances, including the requirement that RoHS substance do not exceed 0.1% by weight in homogeneous materials. Where designed to be soldered at high temperatures, "RoHS" products are suitable for use in specified lead-free processes. TI may reference these types of products as "Pb-Free".
RoHS Exempt: TI defines "RoHS Exempt" to mean products that contain lead but are compliant with EU RoHS pursuant to a specific EU RoHS exemption.
Green: TI defines "Green" to mean the content of Chlorine (Cl) and Bromine (Br) based flame retardants meet JS709B low halogen requirements of <=1000ppm threshold. Antimony trioxide based flame retardants must also meet the <=1000ppm threshold requirement.

(3) MSL, Peak Temp. - The Moisture Sensitivity Level rating according to the JEDEC industry standard classifications, and peak solder temperature.

(4) There may be additional marking, which relates to the logo, the lot trace code information, or the environmental category on the device.

(5) Multiple Device Markings will be inside parentheses. Only one Device Marking contained in parentheses and separated by a "~" will appear on a device. If a line is indented then it is a continuation of the previous line and the two combined represent the entire Device Marking for that device.

(6) Lead/Ball Finish - Orderable Devices may have multiple material finish options. Finish options are separated by a vertical ruled line. Lead/Ball Finish values may wrap to two lines if the finish value exceeds the maximum column width.

Important Information and Disclaimer: The information provided on this page represents TI's knowledge and belief as of the date that it is provided. TI bases its knowledge and belief on information provided by third parties, and makes no representation or warranty as to the accuracy of such information. Efforts are underway to better integrate information from third parties. TI has taken and continues to take reasonable steps to provide representative and accurate information but may not have conducted destructive testing or chemical analysis on incoming materials and chemicals. TI and TI suppliers consider certain information to be proprietary, and thus CAS numbers and other limited information may not be available for release.

In no event shall TI's liability arising out of such information exceed the total purchase price of the TI part(s) at issue in this document sold by TI to Customer on an annual basis.

TAPE AND REEL INFORMATION

REEL DIMENSIONS

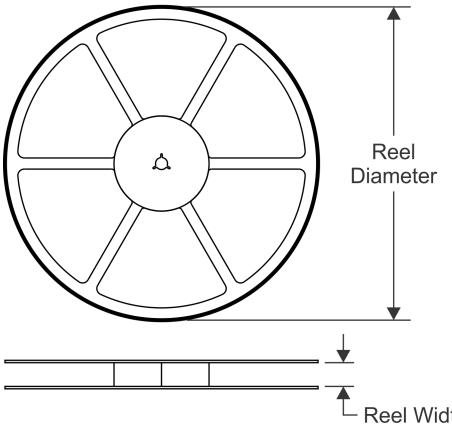

TAPE DIMENSIONS

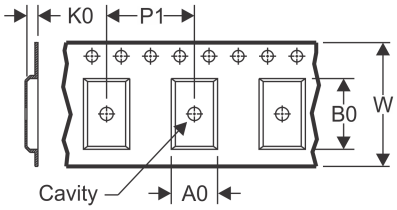

A0	Dimension designed to accommodate the component width
B0	Dimension designed to accommodate the component length
K0	Dimension designed to accommodate the component thickness
W	Overall width of the carrier tape
P1	Pitch between successive cavity centers

QUADRANT ASSIGNMENTS FOR PIN 1 ORIENTATION IN TAPE

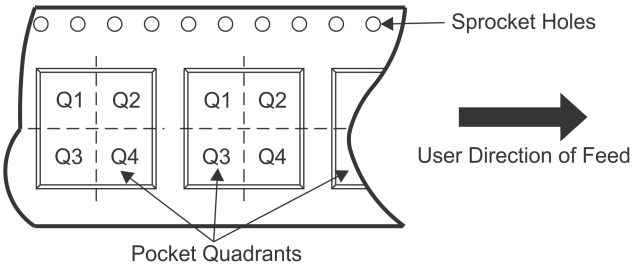

*All dimensions are nominal

Device	Package Type	Package Drawing	Pins	SPQ	Reel Diameter (mm)	Reel Width W1 (mm)	A0 (mm)	B0 (mm)	K0 (mm)	P1 (mm)	W (mm)	Pin1 Quadrant
SN65HVD08DR	SOIC	D	8	2500	330.0	12.4	6.4	5.2	2.1	8.0	12.0	Q1
SN75HVD08DR	SOIC	D	8	2500	330.0	12.4	6.4	5.2	2.1	8.0	12.0	Q1

TAPE AND REEL BOX DIMENSIONS

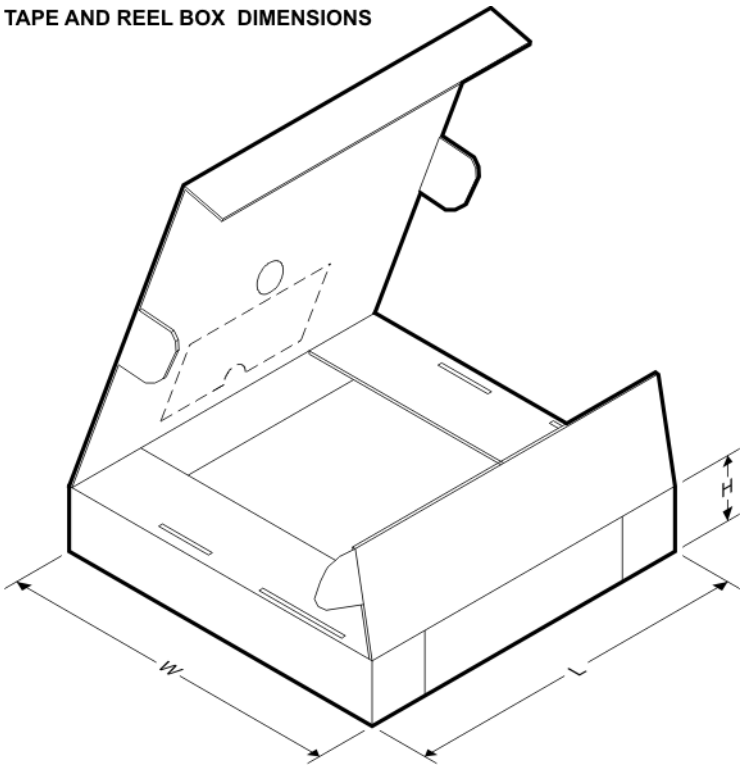

*All dimensions are nominal

Device	Package Type	Package Drawing	Pins	SPQ	Length (mm)	Width (mm)	Height (mm)
SN65HVD08DR	SOIC	D	8	2500	340.5	338.1	20.6
SN75HVD08DR	SOIC	D	8	2500	340.5	338.1	20.6

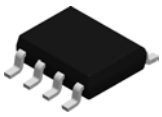

PACKAGE OUTLINE

D0008A

SOIC - 1.75 mm max height

SMALL OUTLINE INTEGRATED CIRCUIT

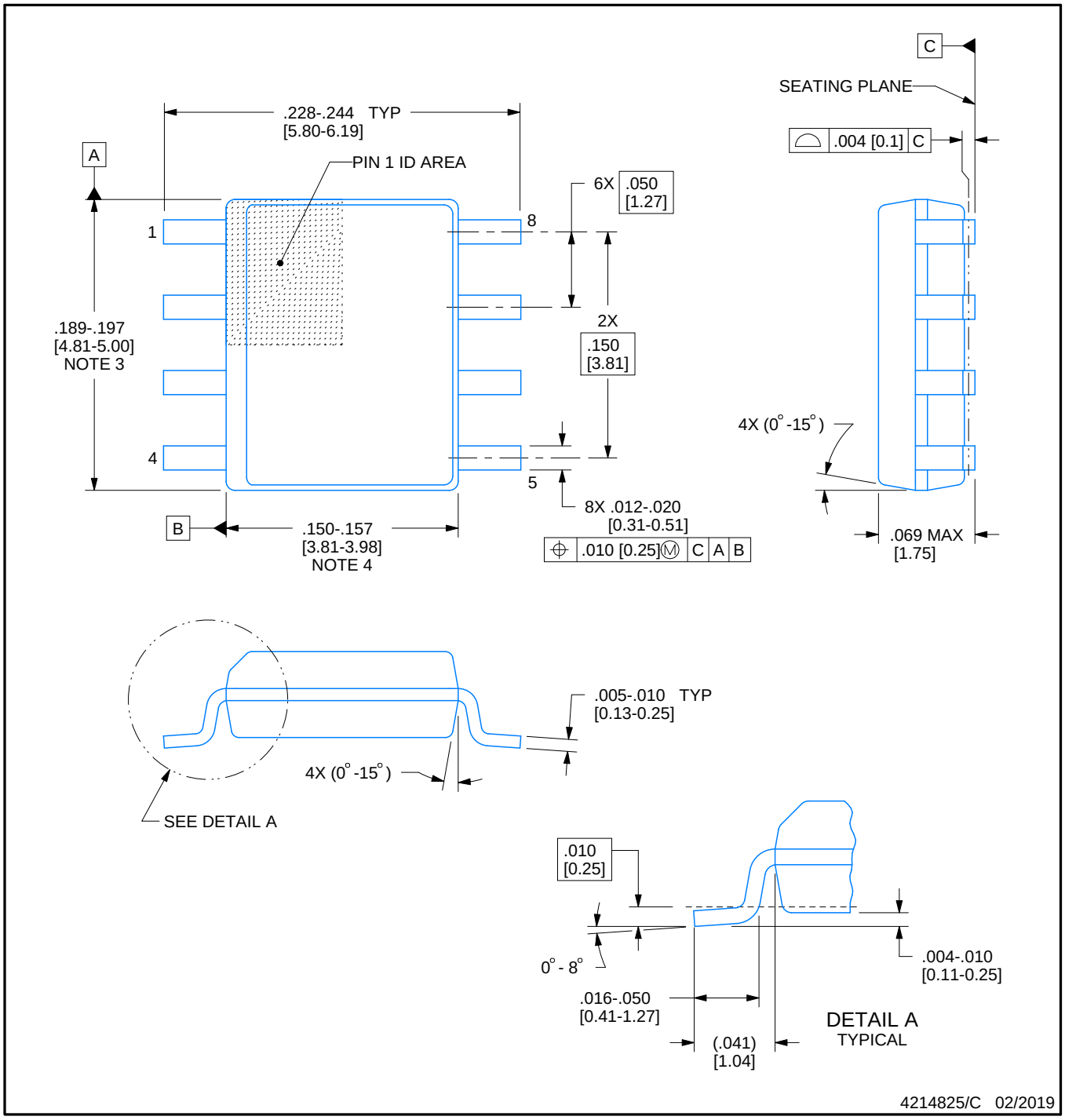

NOTES:

1. Linear dimensions are in inches [millimeters]. Dimensions in parenthesis are for reference only. Controlling dimensions are in inches. Dimensioning and tolerancing per ASME Y14.5M.
2. This drawing is subject to change without notice.
3. This dimension does not include mold flash, protrusions, or gate burrs. Mold flash, protrusions, or gate burrs shall not exceed .006 [0.15] per side.
4. This dimension does not include interlead flash.
5. Reference JEDEC registration MS-012, variation AA.

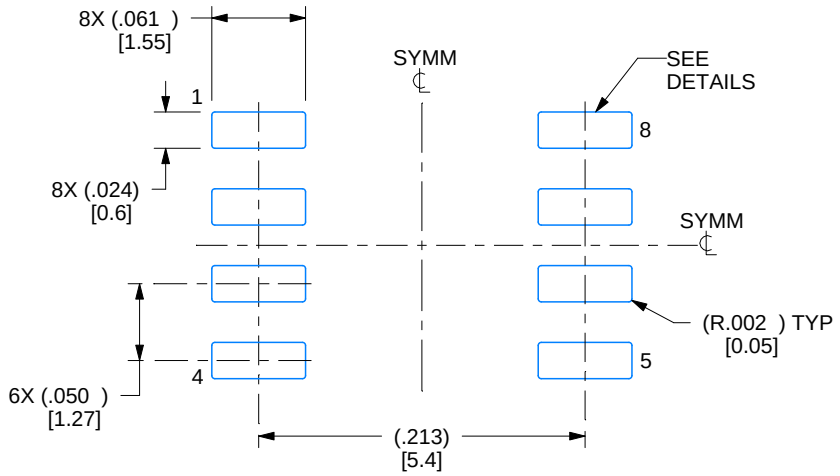

LAND PATTERN EXAMPLE
EXPOSED METAL SHOWN
SCALE:8X

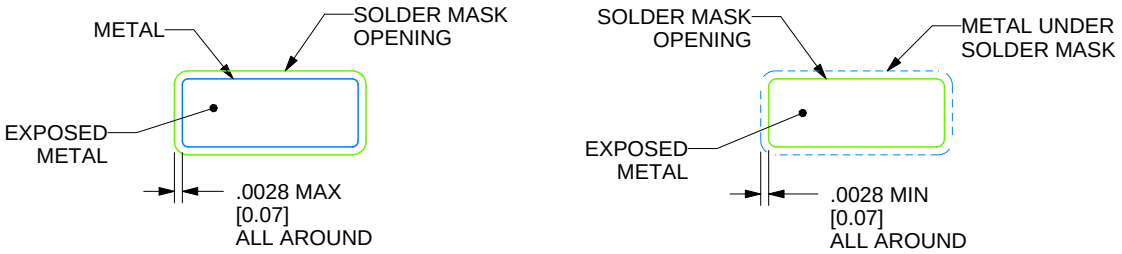

SOLDER MASK DETAILS

4214825/C 02/2019

NOTES: (continued)

6. Publication IPC-7351 may have alternate designs.
7. Solder mask tolerances between and around signal pads can vary based on board fabrication site.

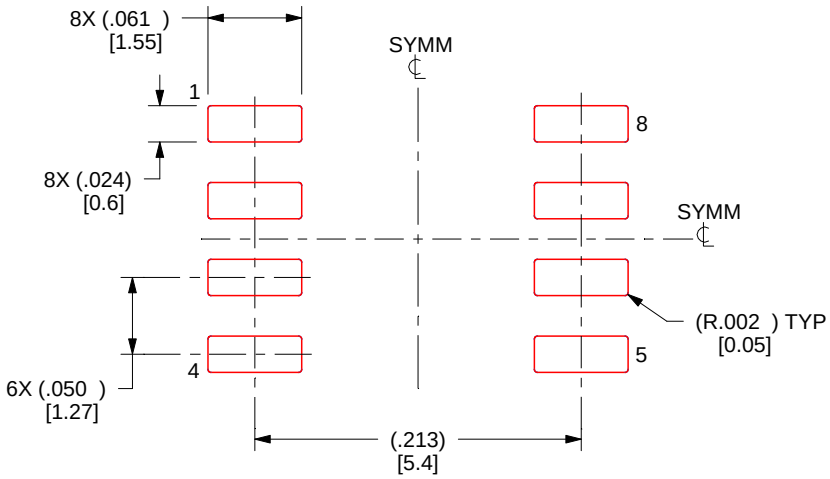

SOLDER PASTE EXAMPLE
BASED ON .005 INCH [0.125 MM] THICK STENCIL
SCALE:8X

4214825/C 02/2019

NOTES: (continued)

8. Laser cutting apertures with trapezoidal walls and rounded corners may offer better paste release. IPC-7525 may have alternate design recommendations.
9. Board assembly site may have different recommendations for stencil design.

P (R–PDIP–T8) PLASTIC DUAL–IN–LINE PACKAGE

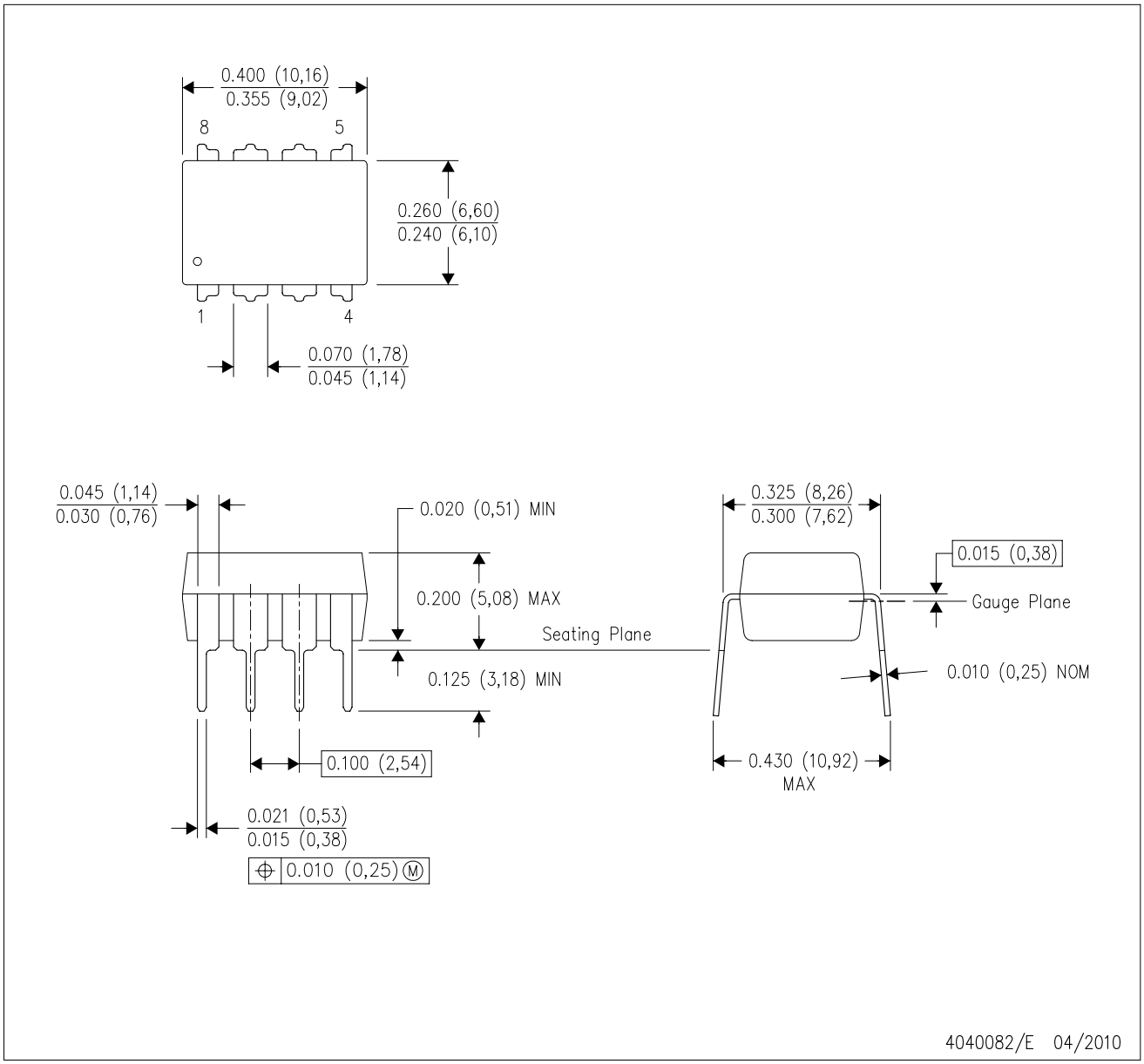

NOTES:
A. All linear dimensions are in inches (millimeters).
B. This drawing is subject to change without notice.
C. Falls within JEDEC MS–001 variation BA.

IMPORTANT NOTICE AND DISCLAIMER

TI PROVIDES TECHNICAL AND RELIABILITY DATA (INCLUDING DATASHEETS), DESIGN RESOURCES (INCLUDING REFERENCE DESIGNS), APPLICATION OR OTHER DESIGN ADVICE, WEB TOOLS, SAFETY INFORMATION, AND OTHER RESOURCES “AS IS” AND WITH ALL FAULTS, AND DISCLAIMS ALL WARRANTIES, EXPRESS AND IMPLIED, INCLUDING WITHOUT LIMITATION ANY IMPLIED WARRANTIES OF MERCHANTABILITY, FITNESS FOR A PARTICULAR PURPOSE OR NON-INFRINGEMENT OF THIRD PARTY INTELLECTUAL PROPERTY RIGHTS.

These resources are intended for skilled developers designing with TI products. You are solely responsible for (1) selecting the appropriate TI products for your application, (2) designing, validating and testing your application, and (3) ensuring your application meets applicable standards, and any other safety, security, or other requirements. These resources are subject to change without notice. TI grants you permission to use these resources only for development of an application that uses the TI products described in the resource. Other reproduction and display of these resources is prohibited. No license is granted to any other TI intellectual property right or to any third party intellectual property right. TI disclaims responsibility for, and you will fully indemnify TI and its representatives against, any claims, damages, costs, losses, and liabilities arising out of your use of these resources.

TI’s products are provided subject to TI’s Terms of Sale (www.ti.com/legal/termsofsale.html) or other applicable terms available either on ti.com or provided in conjunction with such TI products. TI’s provision of these resources does not expand or otherwise alter TI’s applicable warranties or warranty disclaimers for TI products.

Mailing Address: Texas Instruments, Post Office Box 655303, Dallas, Texas 75265
Copyright © 2019, Texas Instruments Incorporated

Looking for pricing, stock, or lifecycle information?

Click below to explore more details on WIN SOURCE:

- View SN65HVD08P on WIN SOURCE
- Texas Instruments Information

Optimize Your Supply Chain with WIN SOURCE Solutions

- Global Sourcing Solution
- Obsolete Management
- Cost Control Management
- Shortage Management
- Alternative Solution
- Excess Inventory Management