# THE DATASHEET OF

# 53398-0290

www.win-source.net 0086-755-83957316

DWG. NO. SD-53398-**10

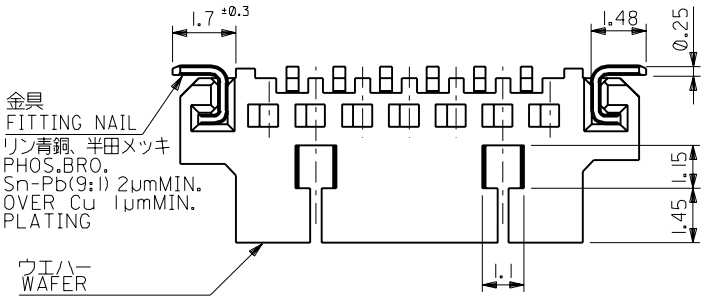


注記 NOTES

1. 嵌合相手：51021シリーズ MATE WITH：51021 SERIES
2. 水平面上においての、ウエハー底面 W とソルダーテール及びフィッティングネイル底面とのズレ量を示す。
   MISALIGNMENT OF SOLDER TAIL & FITTING NAIL FROM W
3. 偶数極にのみ適用。APPLY EVEN CIRCUIT PRODUCTS.
4. ロック窓は、2，3極は1ケ所、4極以上は2ケ所とする。
   LOCKING WINDOW：ONE PLACE FOR 2&3 CKTS.
   TWO PLACES FOR MORE THAN 4 CKTS.

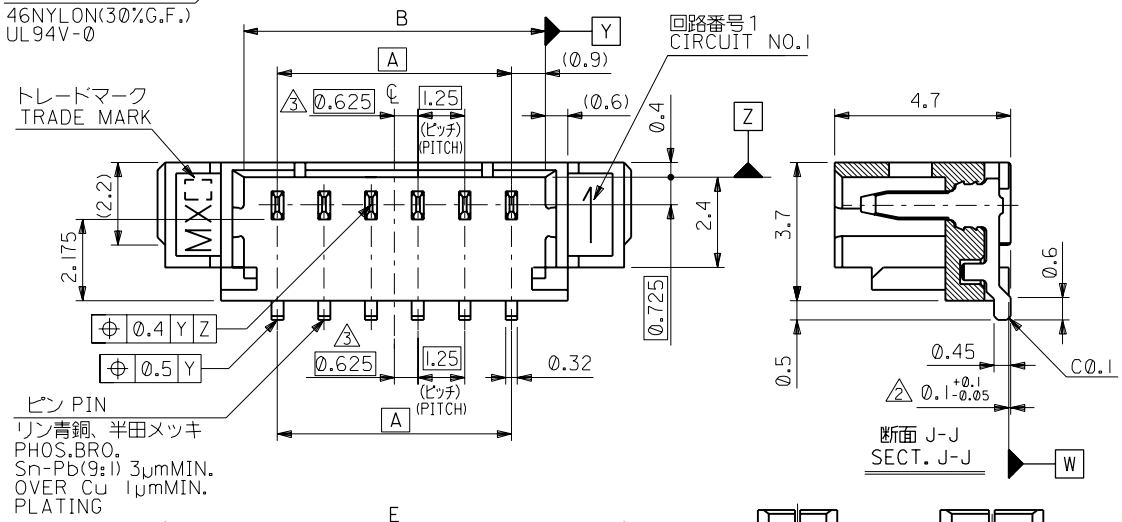


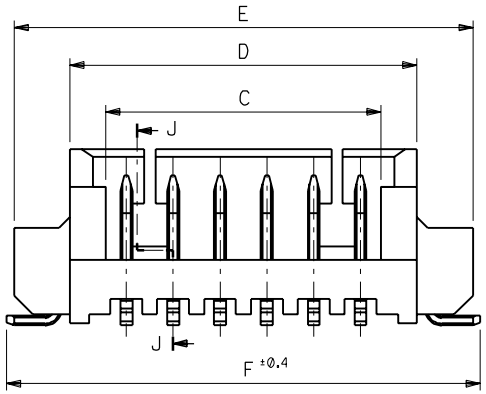


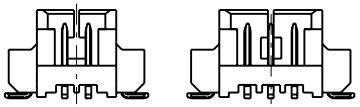

2極 2 CKT.　3極 3 CKT.

4 ロック形状図
LOCK CONFIGURATION

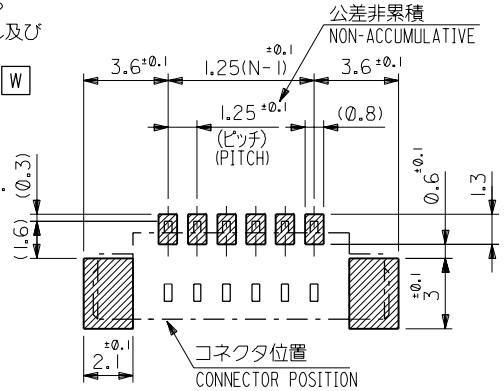


参考基板レイアウト
RECOMMENDED P.C.BOARD PATTERN DIM.(REF.)

| F | E | D | C | B | A | ENG. NO. | 極数 NO. OF CKTS. |
|---|---|---|---|---|---|---|---|
| 23.9 | 23.5 | 20.5 | 18.6 | 19.3 | 17.5 | 53398-1510 | 15 |
| 22.65 | 22.25 | 19.25 | 17.35 | 18.05 | 16.25 | -1410 | 14 |
| 21.4 | 21 | 18 | 16.1 | 16.8 | 15 | -1310 | 13 |
| 20.15 | 19.75 | 16.75 | 14.85 | 15.55 | 13.75 | -1210 | 12 |
| 18.9 | 18.5 | 15.5 | 13.6 | 14.3 | 12.5 | -1110 | 11 |
| 17.65 | 17.25 | 14.25 | 12.35 | 13.05 | 11.25 | -1010 | 10 |
| 16.4 | 16 | 13 | 11.1 | 11.8 | 10 | -0910 | 9 |
| 15.15 | 14.75 | 11.75 | 9.85 | 10.55 | 8.75 | -0810 | 8 |
| 13.9 | 13.5 | 10.5 | 8.6 | 9.3 | 7.5 | -0710 | 7 |
| 12.65 | 12.25 | 9.25 | 7.35 | 8.05 | 6.25 | -0610 | 6 |
| 11.4 | 11 | 8 | 6.1 | 6.8 | 5 | -0510 | 5 |
| 10.15 | 9.75 | 6.75 | 4.85 | 5.55 | 3.75 | -0410 | 4 |
| 8.9 | 8.5 | 5.5 | 3.6 | 4.3 | 2.5 | -0310 | 3 |
| 7.65 | 7.25 | 4.25 | 2.35 | 3.05 | 1.25 | 53398-0210 | 2 |

| 角度 ANGLE | ±3° |
|---|---|
| 30以上 OVER | ±0.3 |
| 10以上 30未満 OVER UNDER | ±0.25 |
| 10未満 UNDER | ±0.2 |
| 一般公差 GENERAL TOLERANCES | |

| 記号 LTR | 変更内容 REVISION RECORD | DR. | CHK. | 日付 DATE |
|---|---|---|---|---|
| F | 変更 REVISED (JC2000-0636) | K.K | M.F | '00/3/30 |
| E | 変更 REVISED (JC800048) | n.i | M.F | '97/7/15 |
| D | 変更 REVISED (J31034) | H.H | M.F | '93/10/13 |
| C | 変更 REVISED (J30753) | K.T | H.H | '93/1/29 |
| B | 変更 REVISED (J30610) | K.T | H.H | '93/6/18 |
| A | 変更 REVISED (J30231) | K.T | H.H | '93/3/12 |
| 0 | 新規作成 RELEASED (J20942) | K.T | H.H | '92/10/12 |

材料 MATERIAL：図中参照 SEE DRAWING
仕上げ FINISH：—#—
適用電線範囲 WIRE RANGE：—#—
被覆外径 INS. RANGE：—#—

DRAWN BY '92/10/12 K.TOJO
CHK'D BY '00/3/30 T.YAMAGUCHI
APP'D BY '00/3/30 M.FUKUSHIMA
尺度 SCALE：—#—

MOLEX-JAPAN CO.,LTD.
日本モレックス株式会社

REVISE ONLY ON CAD SYSTEM

TITLE 名称
1.25 WIRE TO BOARD CONN.
WAFER ASS'Y FOR SMT (ST.)

DWG. NO. SD-53398-**10　REV F

:MM DIMENSIONS IN METRIC DO NOT SCALE DRAWING

53398.S12

THIS DRAWING CONTAINS INFORMATION THAT IS PROPRIETARY TO MOLEX(JAPAN) AND SHOULD NOT BE USED WITHOUT WRITTEN PERMISSION
本図面は日本モレックス（株）の所有する情報を含むもので当社の許可なく複製を禁止する。

EN-01C(032)MXJ-32

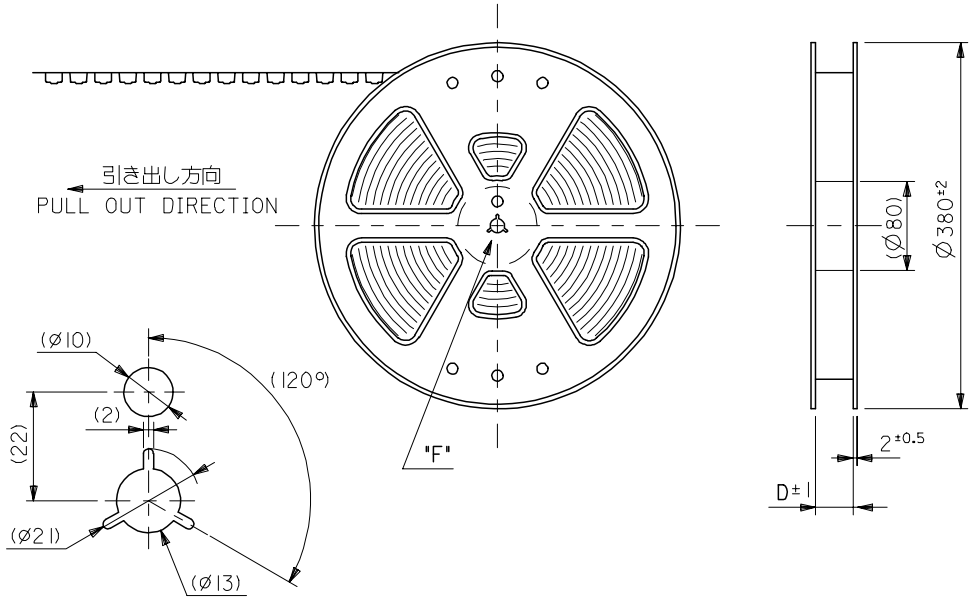


DETAIL "F"

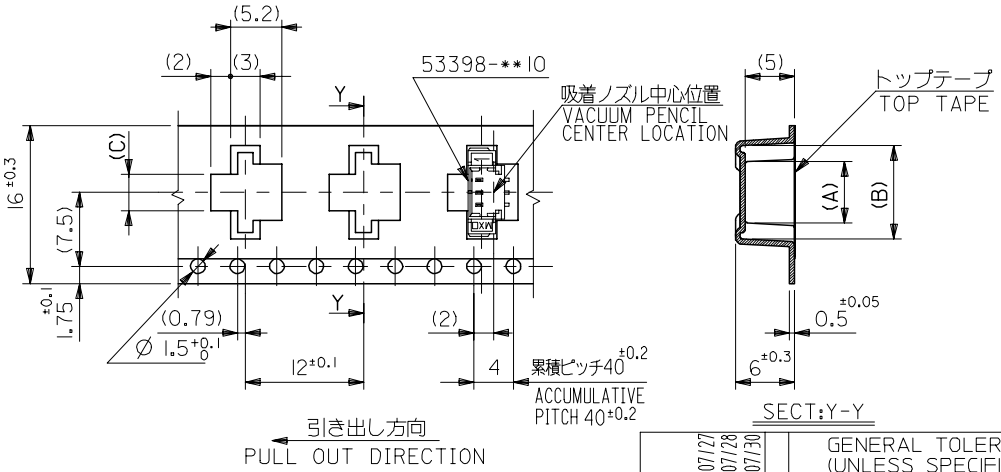


SECT:Y-Y

１６幅テープ
(TAPE WIDTH:16)

NOTES

1. 梱包数量：１０００個／リール
   NUMBER OF CONNECTOR:1000PCS/REEL
2. リードテープ長さ
   LEAD TAPE LENGTH

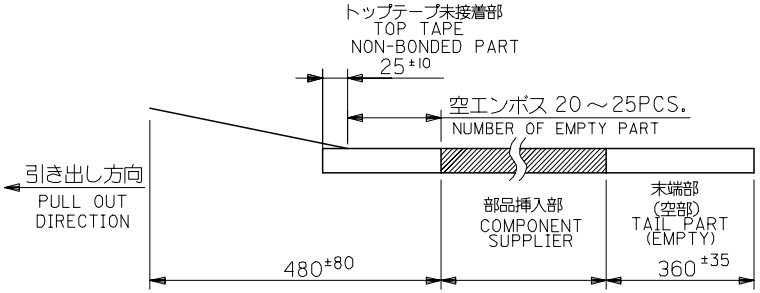


3. トップテープの剥離強度：0.6±0.35N(60±35gf)（剥離方向は下図参照）
   PEELING OFF FORCE OF TOP TAPE：0.6±0.35N(60±35gf)
   (PEELING DIRECTION IS SHOWN IN FOLLOWING FIG.)
   ＜剥離速度： 300mm/min（参考）＞
   PEELING SPEED:300mm/min. (REFERENCE)

4. 53398-**10 の詳細寸法については図面 SD-53398-**10 を参照下さい。
   RE DETAILED DIMENSIONS,SEE SD-53398-**10.
5. 材料 (MATERIAL)
   キャリアテープ(CARRIER TAPE):ポリプロピレン(POLYPROPYLENE)
   トップテープ (TOP TAPE): PET ,PE ,PEF
   リール (REEL):ポリスチレン（ＰＳ）＜リサイクル材含む＞
   POLYSTYREN(PS) <RECYCLE MATERIAL CONTAINED>

| キャリアテープ幅 CARRIER TAPE WIDTH | D | (C) | (B) | (A) | ENG. NO. | 極数 CKT. |
|---|---|---|---|---|---|---|
| 16 | 17.4 | 3.7 | 9.5 | 5.8 | 53398-0390 | 3 |
| | | 2.45 | 8.25 | 4.55 | 53398-0290 | 2 |

| REVISED | | | |
|---|---|---|---|
| EC NO: | | | |
| DRWN:MERIGUCH | 2004/07/27 | | |
| CHKD:K.ASAKAW | 2004/07/28 | | |
| APPR:SICHIKAW | 2004/07/30 | | |
| REV | DESCRIPTION | | |

GENERAL TOLERANCES (UNLESS SPECIFIED)

| | |
|---|---|
| 10 UNDER | ±0.2 |
| 10 OVER 30 UNDER | ±0.25 |
| 30 OVER | ±0.3 |
| ANGULAR ±3 ° | |

DRAFT WHERE APPLICABLE MUST REMAIN WITHIN DIMENSIONS

| | | | |
|---|---|---|---|
| DIMENSION STYLE: MM ONLY | SCALE: --- | DESIGN UNITS: METRIC | THIRD ANGLE PROJECTION |
| DRAWN BY: K.TOJO | DATE: '93/04/13 | TITLE: 1.25 W/B CONN. WAFER ASS'Y FOR SMT. EMBOSSED TAPE PACKAGE | |
| CHECKED BY: YAMAGUCH | DATE: '00/12/08 | | |
| APPROVED BY: FUKUSHIM | DATE: '00/12/08 | molex MOLEX INCORPORATED | |
| MATERIAL NO.: SEE CHART | | DOCUMENT NO.: SD-53398-**90 | SHEET NO.: 1 OF 3 |
| SIZE: A3 | | | |

THIS DRAWING CONTAINS INFORMATION THAT IS PROPRIETARY TO MOLEX INCORPORATED AND SHOULD NOT BE USED WITHOUT WRITTEN PERMISSION

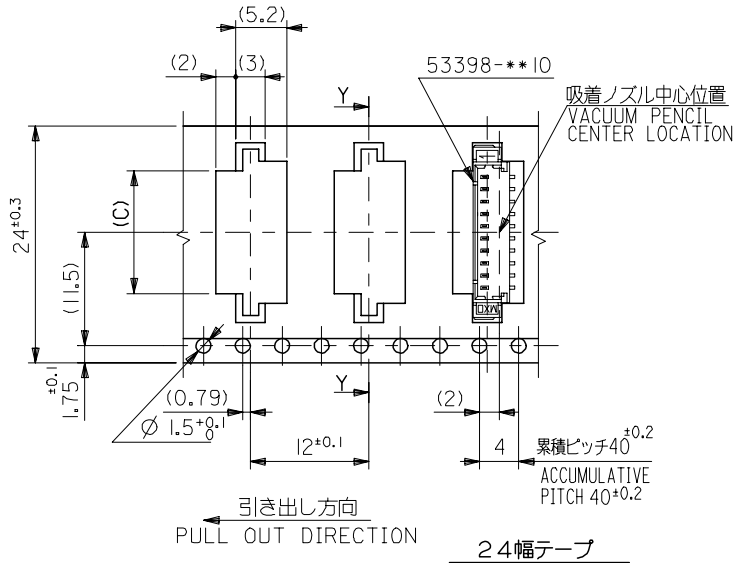


24幅テープ
(TAPE WIDTH:24)

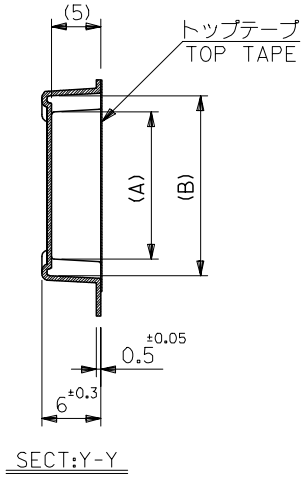


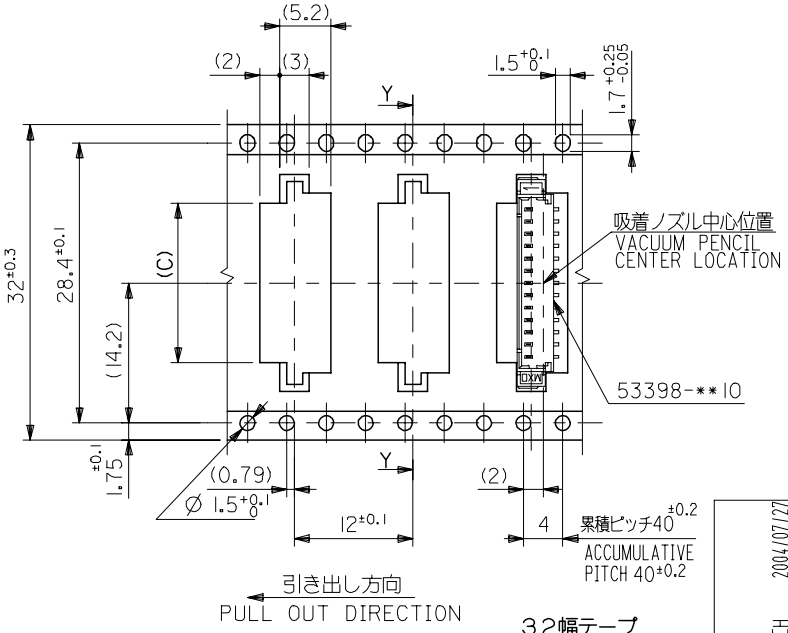


32幅テープ
(TAPE WIDTH:32)

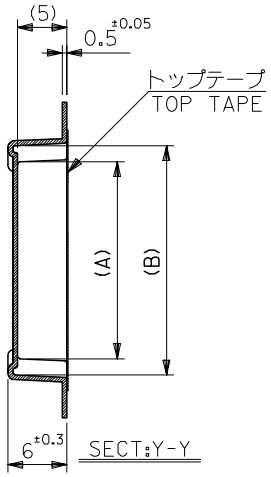


| キャリアテープ幅 CARRIER TAPE WIDTH | D | (C) | (B) | (A) | ENG. NO. | 極数 CKT. |
|---|---|---|---|---|---|---|
| 32 | 33.4 | 16.2 | 22 | 18.3 | 53398-1390 | 13 |
| | | 14.95 | 20.75 | 17.05 | -1290 | 12 |
| | | 13.7 | 19.5 | 15.8 | -1190 | 11 |
| 24 | 25.4 | 12.45 | 18.25 | 14.55 | -1090 | 10 |
| | | 11.2 | 17 | 13.3 | -0990 | 9 |
| | | 9.95 | 15.75 | 12.05 | -0890 | 8 |
| | | 8.7 | 14.5 | 10.8 | -0790 | 7 |
| | | 7.45 | 13.25 | 9.55 | -0690 | 6 |
| | | 6.2 | 12 | 8.3 | -0590 | 5 |
| | | 4.95 | 10.75 | 7.05 | 53398-0490 | 4 |

REVISED
EC NO:
DRWN:MERIGUCH 2004/07/27
CHKD:K.ASAKAW 2004/07/28
APPR:SICHIKAW 2004/07/30
DESCRIPTION
REV

GENERAL TOLERANCES (UNLESS SPECIFIED)

| | |
|---|---|
| 10 UNDER | ±0.2 |
| 10 OVER 30 UNDER | ±0.25 |
| 30 OVER | ±0.3 |
| ANGULAR ±3 ° | |

DRAFT WHERE APPLICABLE MUST REMAIN WITHIN DIMENSIONS

| | | | |
|---|---|---|---|
| DIMENSION STYLE: MM ONLY | SCALE: --- | DESIGN UNITS: METRIC | THIRD ANGLE PROJECTION |
| DRAWN BY: K.TOJO | DATE: '93/04/13 | TITLE: 1.25 W/B CONN. WAFER ASS'Y FOR SMT. EMBOSSED TAPE PACKAGE | |
| CHECKED BY: YAMAGUCH | DATE: '00/12/08 | | |
| APPROVED BY: FUKUSHIM | DATE: '00/12/08 | molex MOLEX INCORPORATED | |
| MATERIAL NO.: SEE CHART | | DOCUMENT NO.: SD-53398-**90 | SHEET NO.: 2 OF 3 |
| SIZE: A3 | | | |

THIS DRAWING CONTAINS INFORMATION THAT IS PROPRIETARY TO MOLEX INCORPORATED AND SHOULD NOT BE USED WITHOUT WRITTEN PERMISSION

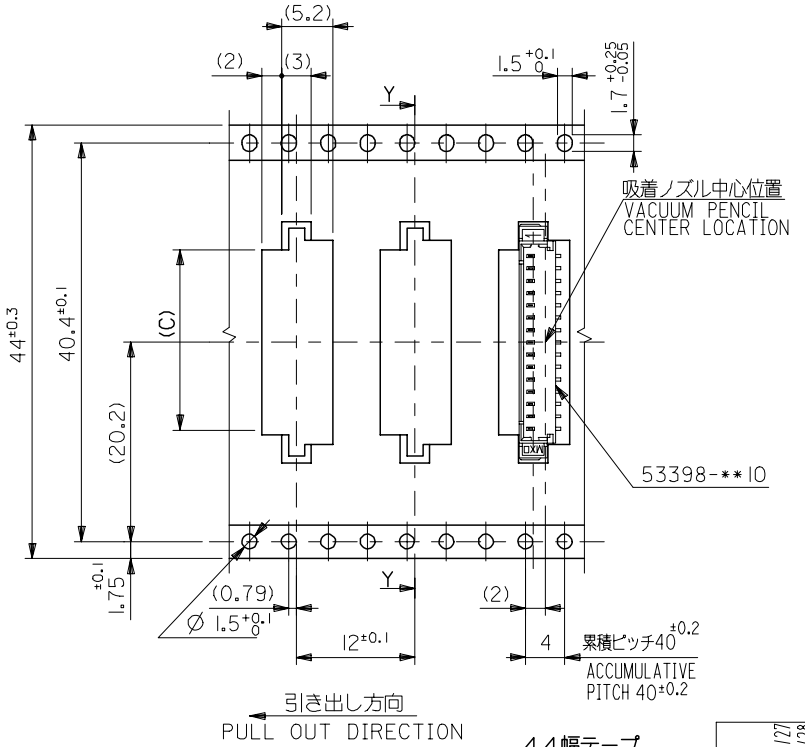


44幅テープ
(TAPE WIDTH:44)

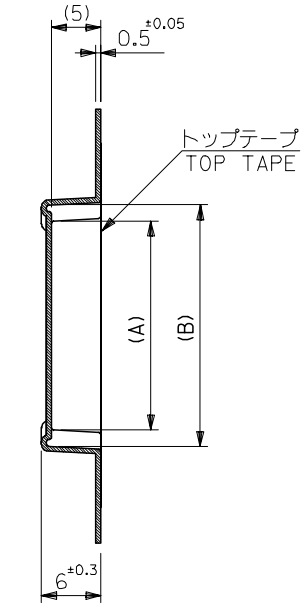


SECT:Y-Y

| キャリアテープ幅 CARRIER TAPE WIDTH | D | (C) | (B) | (A) | ENG. NO. | 極数 CKT. |
|---|---|---|---|---|---|---|
| 44 | 45.4 | 18.7 | 24.5 | 20.8 | 53398-1590 | 15 |
| | | 17.45 | 23.25 | 19.55 | 53398-1490 | 14 |

REVISED
EC NO:
DRWN:MERIGUCH 2004/07/27
CHKD:K.ASAKAW 2004/07/28
APPR:SICHIKAW 2004/07/30
DESCRIPTION
REV

GENERAL TOLERANCES (UNLESS SPECIFIED)

| | |
|---|---|
| 10 UNDER | ±0.2 |
| 10 OVER 30 UNDER | ±0.25 |
| 30 OVER | ±0.3 |
| ANGULAR ±3 ° | |

DRAFT WHERE APPLICABLE MUST REMAIN WITHIN DIMENSIONS

DIMENSION STYLE: MM ONLY
SCALE: ---
DESIGN UNITS: METRIC
THIRD ANGLE PROJECTION

DRAWN BY: K.TOJO DATE: '93/04/13
CHECKED BY: YAMAGUCH DATE: '00/12/08
APPROVED BY: FUKUSHIM DATE: '00/12/08

TITLE: 1.25 W/B CONN. WAFER ASS'Y FOR SMT. EMBOSSED TAPE PACKAGE

molex MOLEX INCORPORATED

MATERIAL NO.: SEE CHART
DOCUMENT NO.: SD-53398-**90
SHEET NO.: 3 OF 3
SIZE: A3

THIS DRAWING CONTAINS INFORMATION THAT IS PROPRIETARY TO MOLEX INCORPORATED AND SHOULD NOT BE USED WITHOUT WRITTEN PERMISSION

## Looking for pricing, stock, or lifecycle information?

Click below to explore more details on WIN SOURCE:

- View 53398-0290 on WIN SOURCE
- Molex, LLC Information

## Optimize Your Supply Chain with WIN SOURCE Solutions

- Global Sourcing Solution
- Obsolete Management
- Cost Control Management
- Shortage Management
- Alternative Solution
- Excess Inventory Management