THE DATASHEET OF

PIC16LF819-I/SS

www.win-source.net 0086-755-83957316

International
IOR Rectifier

PD - 95960

IRF9321PbF

HEXFET® Power MOSFET

V_{DS}	-30	V
$R_{DS(on)}$ max (@V_{GS} = -10V)	7.2	mΩ
$R_{DS(on)}$ max (@V_{GS} = -4.5V)	11.2	mΩ
Q_{g} (typical)	34	nC
I_D (@T_A = 25°C)	-15	A

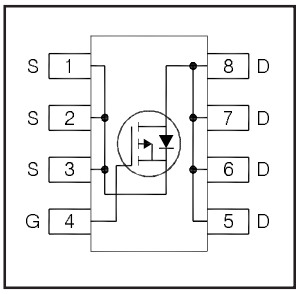

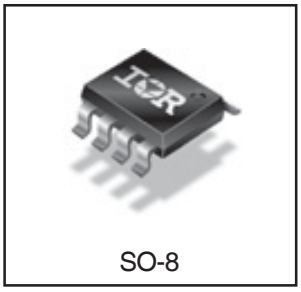

Applications

- Charge and Discharge Switch for Notebook PC Battery Application

Features and Benefits

Features		Resulting Benefits
Industry-Standard SO-8 Package	results in	Multi-Vendor Compatibility
RoHS Compliant Containing no Lead, no Bromide and no Halogen	⇒	Environmentally Friendlier

Orderable part number	Package Type	Standard Pack		Note
		Form	Quantity	
IRF9321PbF	SO8	Tube/Bulk	95	
IRF9321TRPbF	SO8	Tape and Reel	4000	

Absolute Maximum Ratings

	Parameter	Max.	Units
V_{DS}	Drain-to-Source Voltage	-30	V
V_{GS}	Gate-to-Source Voltage	±20	
I_D @ T_A = 25°C	Continuous Drain Current, V_{GS} @ -10V	-15	A
I_D @ T_A = 70°C	Continuous Drain Current, V_{GS} @ -10V	-12	
I_{DM}	Pulsed Drain Current ①	-120	
P_D @T_A = 25°C	Power Dissipation ④	2.5	W
P_D @T_A = 70°C	Power Dissipation ④	1.6	
	Linear Derating Factor	0.02	W/°C
T_J T_{STG}	Operating Junction and Storage Temperature Range	-55 to + 150	°C

Notes ① through ⑥ are on page 2

05/11/2010

Static @ T_J = 25°C (unless otherwise specified)

	Parameter	Min.	Typ.	Max.	Units	Conditions
BV_{DSS}	Drain-to-Source Breakdown Voltage	-30	—	—	V	V_{GS} = 0V, I_D = -250μA
$\Delta BV_{DSS}/\Delta T_J$	Breakdown Voltage Temp. Coefficient	—	0.021	—	V/°C	Reference to 25°C, I_D = -1mA
$R_{DS(on)}$	Static Drain-to-Source On-Resistance	—	5.9	7.2	mΩ	V_{GS} = -10V, I_D = -15A ③
		—	9.3	11.2		V_{GS} = -4.5V, I_D = -12A ③
$V_{GS(th)}$	Gate Threshold Voltage	-1.3	-1.8	-2.4	V	V_{DS} = V_{GS}, I_D = -50μA
$\Delta V_{GS(th)}$	Gate Threshold Voltage Coefficient	—	-5.9	—	mV/°C	
I_{DSS}	Drain-to-Source Leakage Current	—	—	-1.0	μA	V_{DS} = -24V, V_{GS} = 0V
		—	—	-150		V_{DS} = -24V, V_{GS} = 0V, T_J = 125°C
I_{GSS}	Gate-to-Source Forward Leakage	—	—	-100	nA	V_{GS} = -20V
	Gate-to-Source Reverse Leakage	—	—	100		V_{GS} = 20V
gfs	Forward Transconductance	30	—	—	S	V_{DS} = -10V, I_D = -12A
Q_g	Total Gate Charge ⑥	—	34	—	nC	V_{DS} = -15V, V_{GS} = -4.5V, I_D = - 12A
Q_g	Total Gate Charge ⑥	—	65	98	nC	V_{GS} = -10V
Q_{gs}	Gate-to-Source Charge ⑥	—	10	—		V_{DS} = -15V
Q_{gd}	Gate-to-Drain Charge ⑥	—	16	—		I_D = -12A
R_G	Gate Resistance ⑥	—	18	—	Ω	
$t_{d(on)}$	Turn-On Delay Time	—	21	—	ns	V_{DD} = -30V, V_{GS} = -4.5V ③
t_r	Rise Time	—	79	—		I_D = -1.0A
$t_{d(off)}$	Turn-Off Delay Time	—	185	—		R_G = 6.8Ω
t_f	Fall Time	—	145	—		See Figs. 19a & 19b
C_{iss}	Input Capacitance	—	2590	—	pF	V_{GS} = 0V
C_{oss}	Output Capacitance	—	590	—		V_{DS} = -25V
C_{rss}	Reverse Transfer Capacitance	—	360	—		f = 1.0MHz

Avalanche Characteristics

	Parameter	Typ.	Max.	Units
E_{AS}	Single Pulse Avalanche Energy ②	—	310	mJ
I_{AR}	Avalanche Current ①	—	-12	A

Diode Characteristics

	Parameter	Min.	Typ.	Max.	Units	Conditions
I_S	Continuous Source Current (Body Diode)	—	—	-2.5	A	MOSFET symbol showing the integral reverse p-n junction diode. 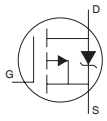
I_{SM}	Pulsed Source Current (Body Diode) ①	—	—	-120		
V_{SD}	Diode Forward Voltage	—	—	-1.2	V	T_J = 25°C, I_S = -2.5A, V_{GS} = 0V ③
t_{rr}	Reverse Recovery Time	—	38	57	ns	T_J = 25°C, I_F = -2.5A, V_{DD} = -24V
Q_{rr}	Reverse Recovery Charge	—	24	36	nC	di/dt = 100/μs ③

Thermal Resistance

	Parameter	Typ.	Max.	Units
$R_{\theta JL}$	Junction-to-Drain Lead ⑤	—	20	°C/W
$R_{\theta JA}$	Junction-to-Ambient ④	—	50	

Notes:

① Repetitive rating; pulse width limited by max. junction temperature.
② Starting T_J = 25°C, L = 4.3mH, R_G = 25Ω, I_{AS} = -12A.
③ Pulse width ≤ 400μs; duty cycle ≤ 2%.
④ When mounted on 1 inch square copper board.
⑤ R_θ is measured at T_J of approximately 90°C.
⑥ For DESIGN AID ONLY, not subject to production testing.

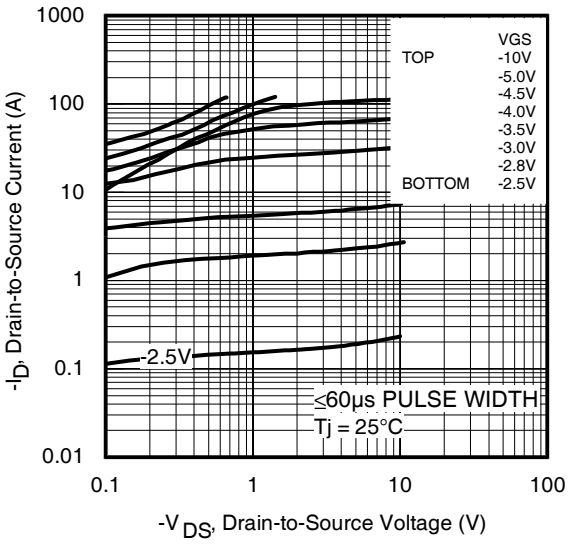

Fig 1. Typical Output Characteristics

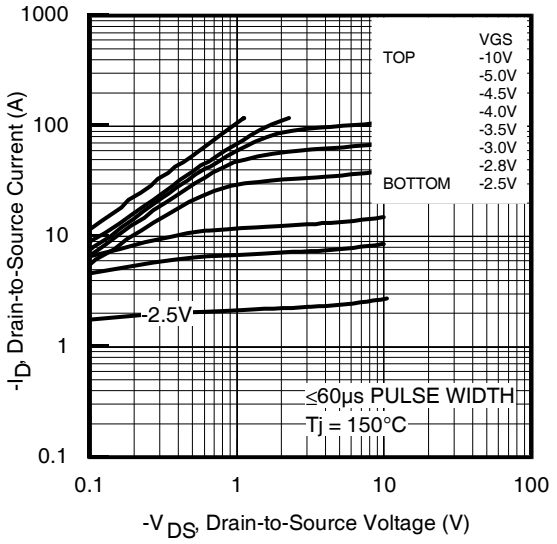

Fig 2. Typical Output Characteristics

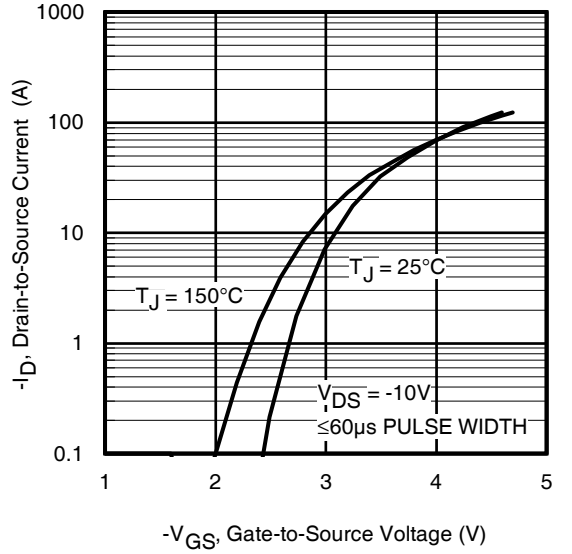

Fig 3. Typical Transfer Characteristics

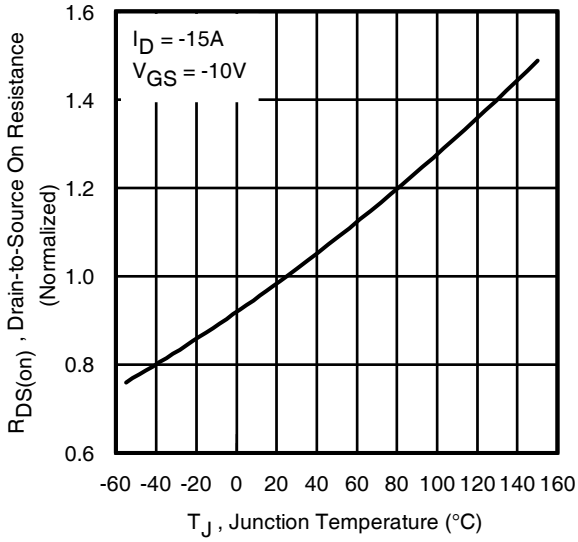

Fig 4. Normalized On-Resistance vs. Temperature

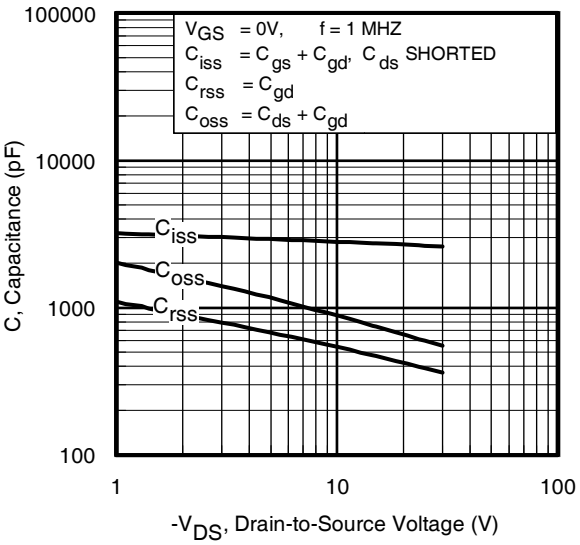

Fig 5. Typical Capacitance vs.Drain-to-Source Voltage

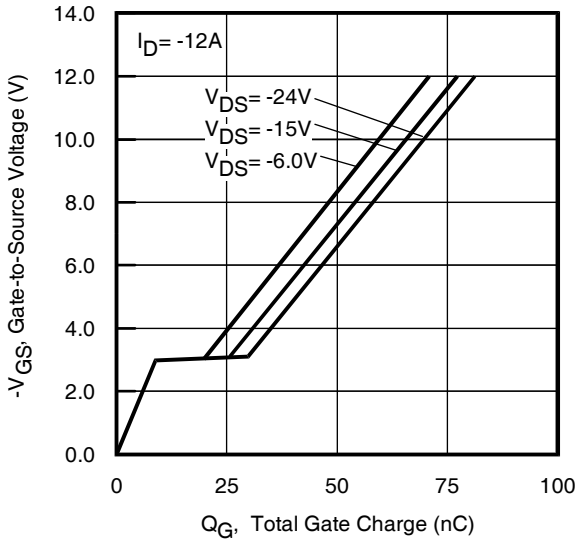

Fig 6. Typical Gate Charge vs.Gate-to-Source Voltage

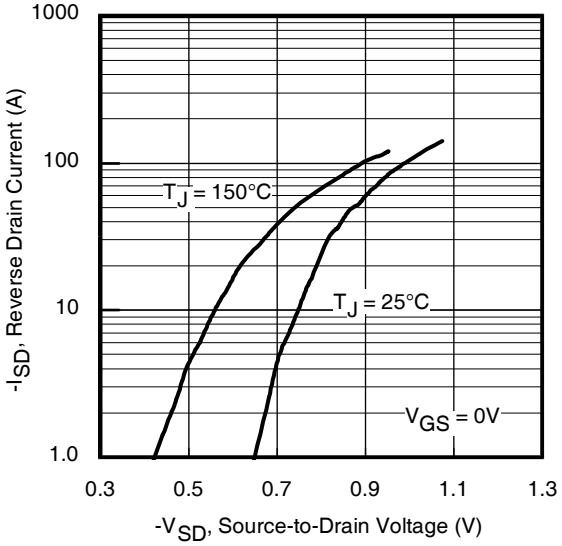

Fig 7. Typical Source-Drain Diode Forward Voltage

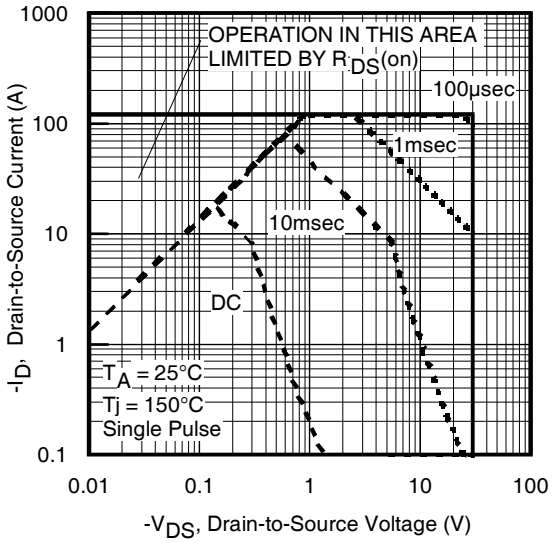

Fig 8. Maximum Safe Operating Area

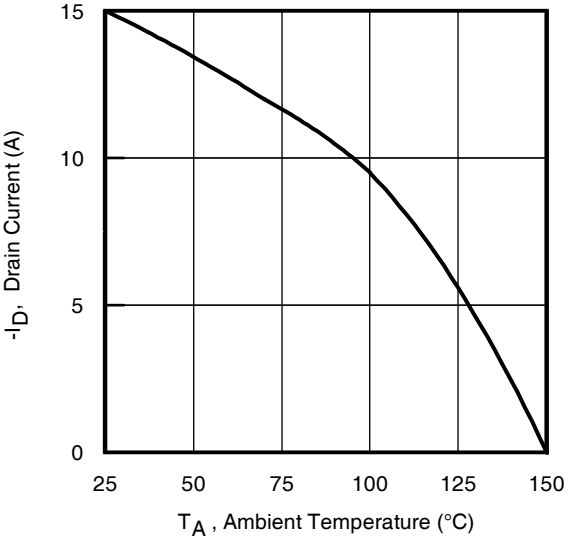

Fig 9. Maximum Drain Current vs. Ambient Temperature

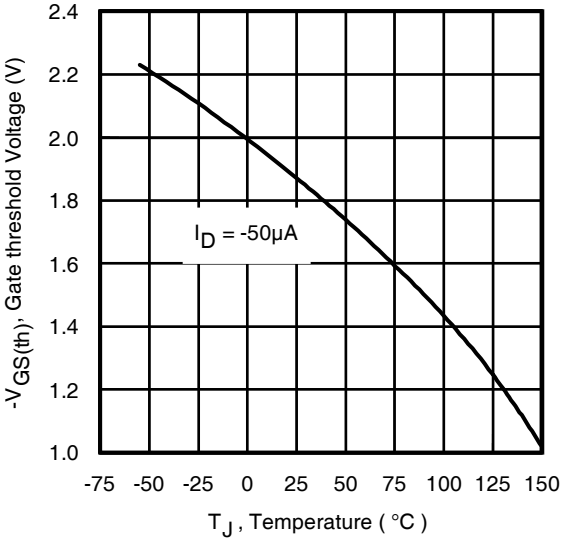

Fig 10. Threshold Voltage vs. Temperature

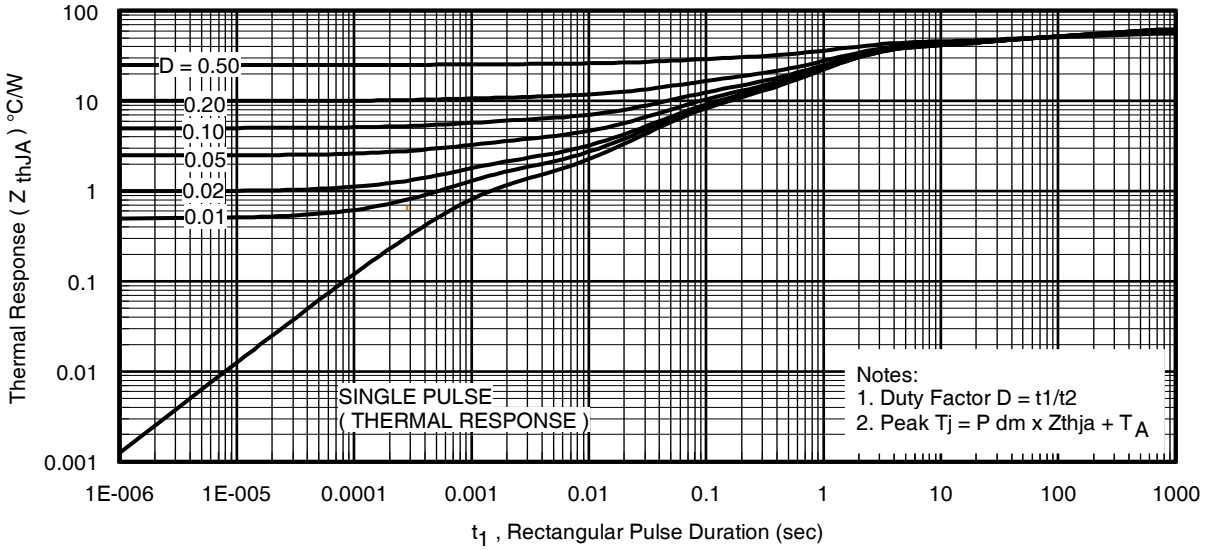

Fig 11. Maximum Effective Transient Thermal Impedance, Junction-to-Ambient

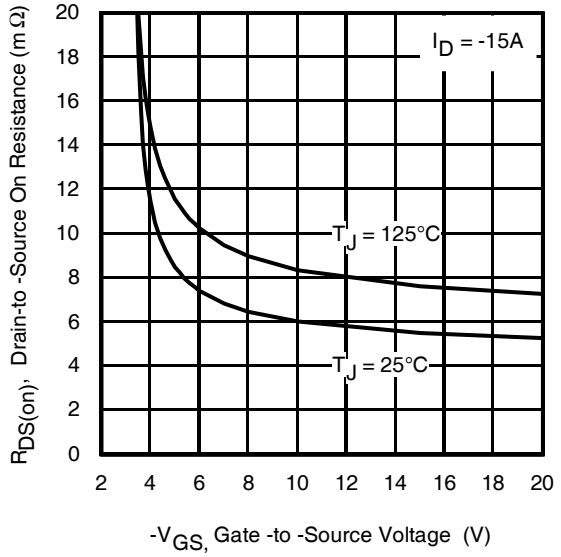

Fig 12. On-Resistance vs. Gate Voltage

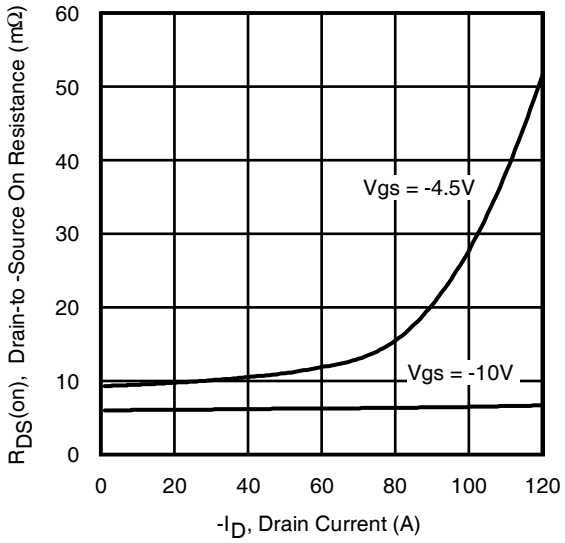

Fig 13. Typical On-Resistance vs. Drain Current

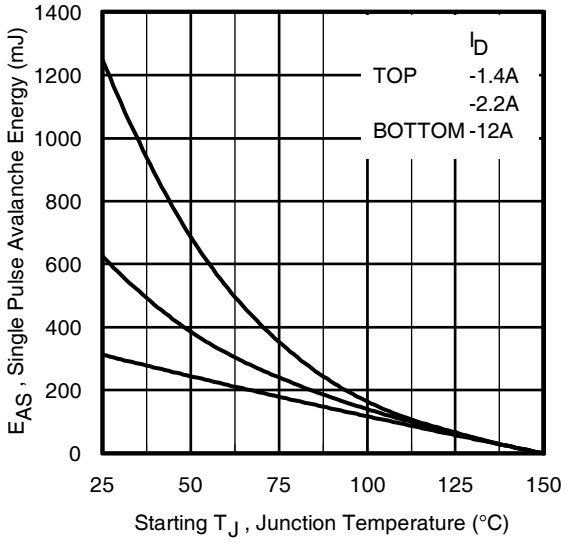

Fig 14. Maximum Avalanche Energy vs. Drain Current

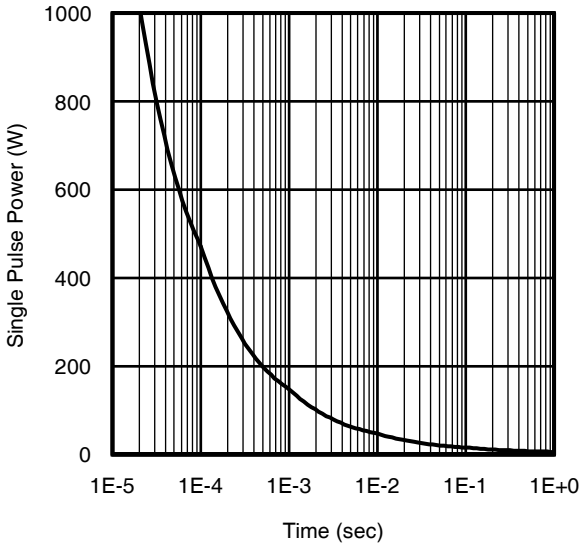

Fig 15. Typical Power vs. Time

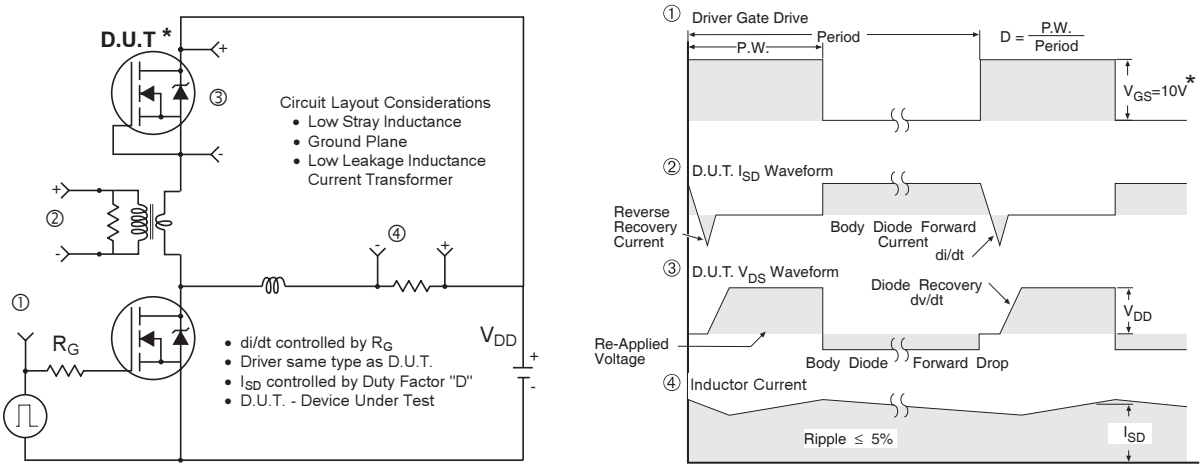

* Reverse Polarity of D.U.T for P-Channel

* V_{GS} = 5V for Logic Level Devices

Fig 16. Diode Reverse Recovery Test Circuit for P-Channel HEXFET® Power MOSFETs

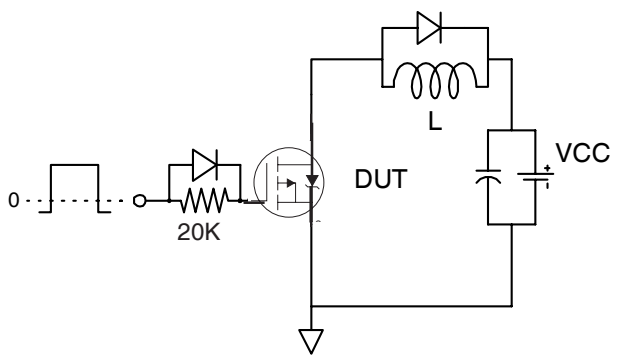

Fig 17a. Gate Charge Test Circuit

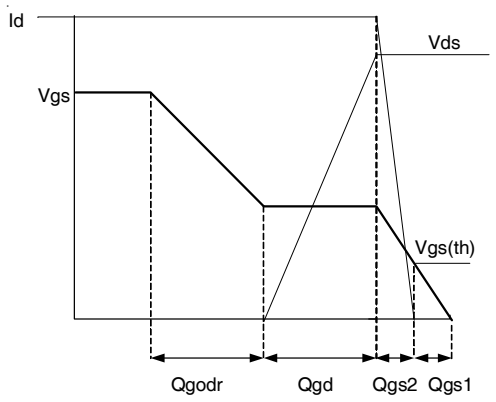

Fig 17b. Gate Charge Waveform

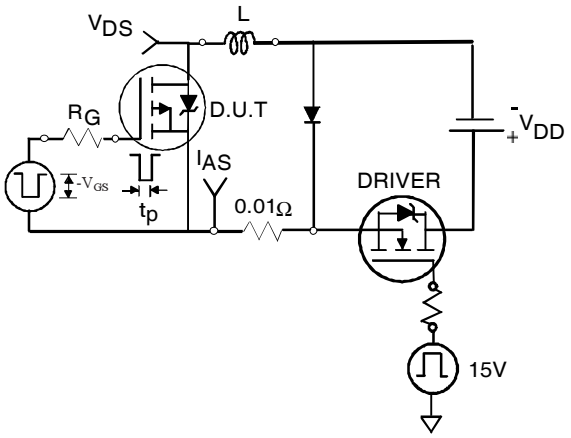

Fig 18a. Unclamped Inductive Test Circuit

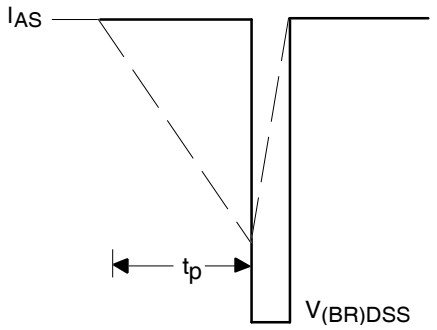

Fig 18b. Unclamped Inductive Waveforms

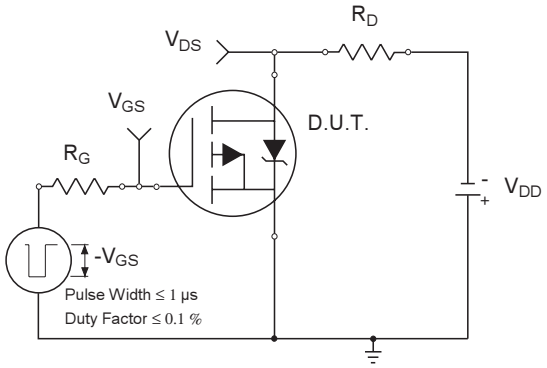

Fig 19a. Switching Time Test Circuit

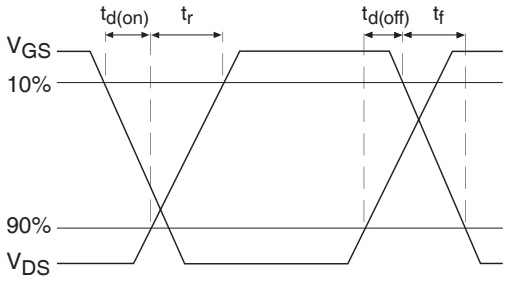

Fig 19b. Switching Time Waveforms

SO-8 Package Outline(Mosfet & Fetky)

Dimensions are shown in milimeters (inches)

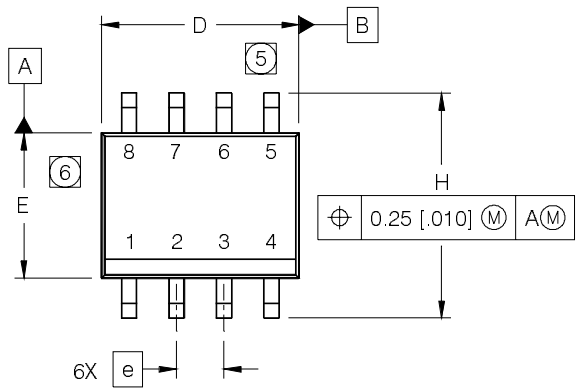

DIM	INCHES		MILLIMETERS	
	MIN	MAX	MIN	MAX
A	.0532	.0688	1.35	1.75
A1	.0040	.0098	0.10	0.25
b	.013	.020	0.33	0.51
c	.0075	.0098	0.19	0.25
D	.189	.1968	4.80	5.00
E	.1497	.1574	3.80	4.00
e	.050 BASIC		1.27 BASIC	
e 1	.025 BASIC		0.635 BASIC	
H	.2284	.2440	5.80	6.20
K	.0099	.0196	0.25	0.50
L	.016	.050	0.40	1.27
y	0°	8°	0°	8°

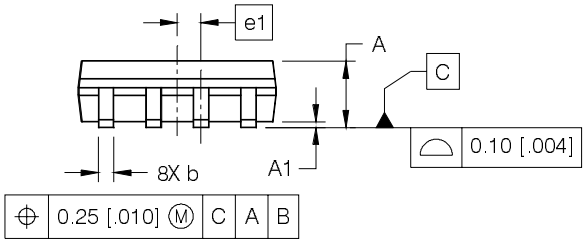

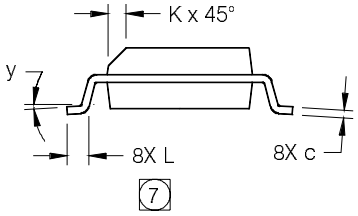

NOTES:

1. DIMENSIONING & TOLERANCING PER ASME Y14.5M-1994.
2. CONTROLLING DIMENSION: MILLIMETER
3. DIMENSIONS ARE SHOWN IN MILLIMETERS [INCHES].
4. OUTLINE CONFORMS TO JEDEC OUTLINE MS-012AA.

5. DIMENSION DOES NOT INCLUDE MOLD PROTRUSIONS. MOLD PROTRUSIONS NOT TO EXCEED 0.15 [.006].

6. DIMENSION DOES NOT INCLUDE MOLD PROTRUSIONS. MOLD PROTRUSIONS NOT TO EXCEED 0.25 [.010].

7. DIMENSION IS THE LENGTH OF LEAD FOR SOLDERING TO A SUBSTRATE.

FOOTPRINT

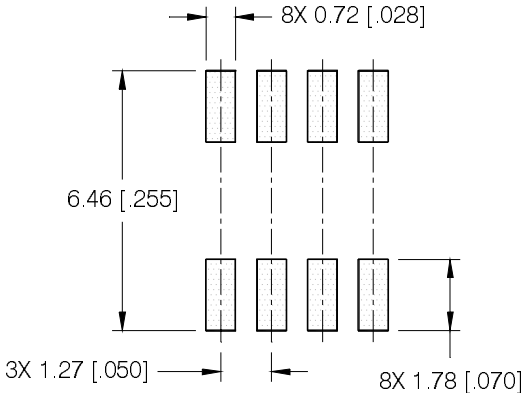

SO-8 Part Marking Information

EXAMPLE: THIS IS AN IRF7101 (MOSFET)

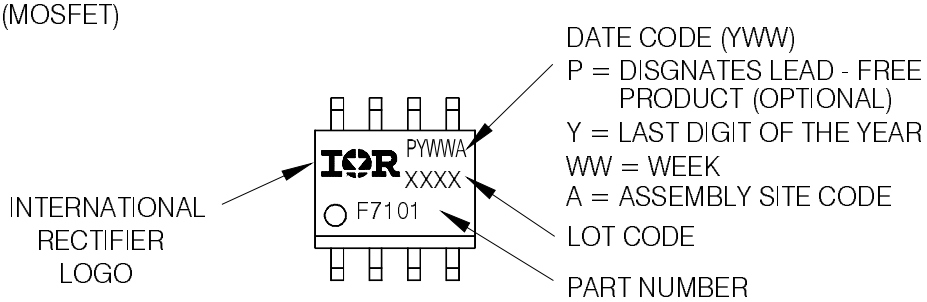

Note: For the most current drawing please refer to IR website at http://www.irf.com/package/

International
IOR Rectifier

SO-8 Tape and Reel (Dimensions are shown in milimeters (inches))

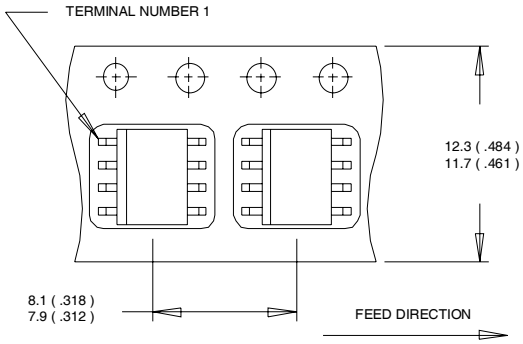

NOTES:
1. CONTROLLING DIMENSION : MILLIMETER.
2. ALL DIMENSIONS ARE SHOWN IN MILLIMETERS(INCHES).
3. OUTLINE CONFORMS TO EIA-481 & EIA-541.

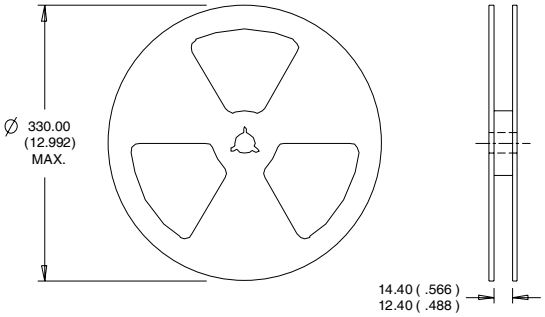

NOTES :
1. CONTROLLING DIMENSION : MILLIMETER.
2. OUTLINE CONFORMS TO EIA-481 & EIA-541.

Qualification Information†

Qualification level	Consumer ††	
	(per JEDEC JESD47F††† guidelines)	
Moisture Sensitivity Level	SO-8	MSL1 (per JEDEC J-STD-020D†††)
RoHS Compliant	Yes	

† Qualification standards can be found at International Rectifier's web site http://www.irf.com/product-info/reliability

†† Higher qualification ratings may be available should the user have such requirements. Please contact your International Rectifier sales representative for further information: http://www.irf.com/whoto-call/salesrep/

††† Applicable version of JEDEC standard at the time of product release.

Data and specifications subject to change without notice.

International
IOR Rectifier

IR WORLD HEADQUARTERS: 233 Kansas St., El Segundo, California 90245, USA Tel: (310) 252-7105
TAC Fax: (310) 252-7903
Visit us at www.irf.com for sales contact information.05/2010

IMPORTANT NOTICE

The information given in this document shall in no event be regarded as a guarantee of conditions or characteristics ("Beschaffenheitsgarantie") .

With respect to any examples, hints or any typical values stated herein and/or any information regarding the application of the product, Infineon Technologies hereby disclaims any and all warranties and liabilities of any kind, including without limitation warranties of non-infringement of intellectual property rights of any third party.

In addition, any information given in this document is subject to customer's compliance with its obligations stated in this document and any applicable legal requirements, norms and standards concerning customer's products and any use of the product of Infineon Technologies in customer's applications.

The data contained in this document is exclusively intended for technically trained staff. It is the responsibility of customer's technical departments to evaluate the suitability of the product for the intended application and the completeness of the product information given in this document with respect to such application.

For further information on the product, technology, delivery terms and conditions and prices please contact your nearest Infineon Technologies office (**www.infineon.com**).

WARNINGS

Due to technical requirements products may contain dangerous substances. For information on the types in question please contact your nearest Infineon Technologies office.

Except as otherwise explicitly approved by Infineon Technologies in a written document signed by authorized representatives of Infineon Technologies, Infineon Technologies' products may not be used in any applications where a failure of the product or any consequences of the use thereof can reasonably be expected to result in personal injury.

Looking for pricing, stock, or lifecycle information?

Click below to explore more details on WIN SOURCE:

- View PIC16LF819-I/SS on WIN SOURCE
- Microchip Technology Information

Optimize Your Supply Chain with WIN SOURCE Solutions

- Global Sourcing Solution
- Obsolete Management
- Cost Control Management
- Shortage Management
- Alternative Solution
- Excess Inventory Management