THE DATASHEET OF

PC910L0NSZ

www.win-source.net 0086-755-83957316

PC910L0NSZ Series

High Speed 10Mb/s, High CMR DIP 8 pin *OPIC Photocoupler

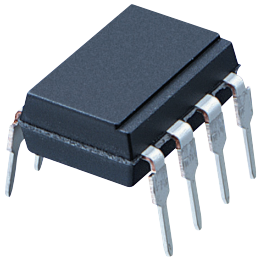

■ Description

PC910L0NSZ Series contains a LED optically coupled to an OPIC chip.

It is packaged in a 8 pin DIP.

Input-output isolation voltage(rms) is 5.0kV, High speed response (TYP. 10 Mb/s) and CMR is MIN. 10 kV/μs.

■ Features

1. DIP 8 pin package
2. Double transfer mold package
   (Ideal for Flow Soldering)
3. High speed response
   (t_{PHL} : TYP. 48 ns, t_{PLH} : TYP. 50 ns)
4. Low input current drive (I_{FHL} : MAX. 5 mA)
5. Instantaneous common mode rejection voltage
   (CM_H : MIN.10 kV/μs, CM_L : MIN. −10 kV/μs)
6. TTL and LSTTL compatible output
7. High isolation voltage between input and output
   ($V_{iso(rms)}$: 5.0 kV)

■ Agency approvals/Compliance

1. Recognized by UL1577 (Double protection isolation), file No. E64380 (as model No. **PC910L**)
2. Approved by VDE (VDE0884) (as an option), file No. 87446 (as model No. **PC910L**)
3. Package resin : UL flammability grade (94V-0)

■ Applications

1. High speed interfaces for computer peripherals
2. Programmable controllers
3. Inverter

* "OPIC"(Optical IC) is a trademark of the SHARP Corporation. An OPIC consists of a light-detecting element and a signal-processing circuit integrated onto a single chip.

Notice The content of data sheet is subject to change without prior notice.
In the absence of confirmation by device specification sheets, SHARP takes no responsibility for any defects that may occur in equipment using any SHARP devices shown in catalogs, data books, etc. Contact SHARP in order to obtain the latest device specification sheets before using any SHARP device.

Sheet No.: D2-A05601EN
Date Nov. 28. 2003
© SHARP Corporation

■ Internal Connection Diagram

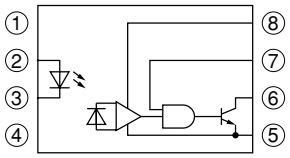

① NC
② Anode
③ Cathode
④ NC
⑤ GND
⑥ V_O (Open collector)
⑦ V_E (Enable)
⑧ V_{CC}

■ Truth table

Input	Enable	Output
H	H	L
L	H	H
H	L	H
L	L	H

L : Logic (0)
H : Logic (1)

■ Outline Dimensions

(Unit : mm)

1. Through-Hole [ex. **PC910L0NSZ**]

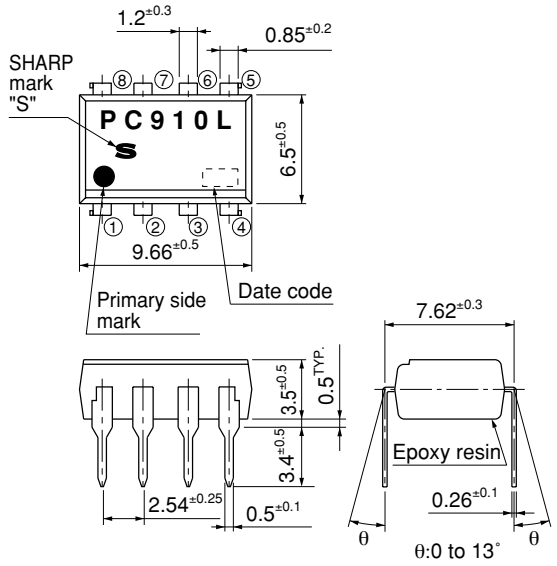

2. Through-Hole (VDE0884 option) [ex. **PC910L0YSZ**]

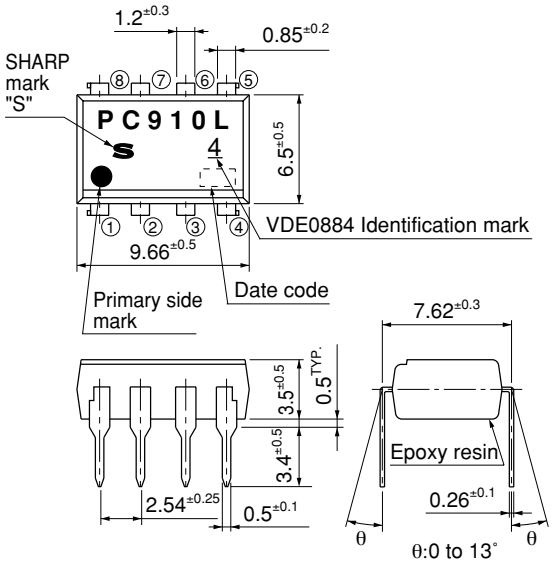

Product mass : approx. 0.49g

Date code (2 digit)

1st digit				2nd digit	
Year of production				Month of production	
A.D.	Mark	A.D	Mark	Month	Mark
1990	A	2002	P	January	1
1991	B	2003	R	February	2
1992	C	2004	S	March	3
1993	D	2005	T	April	4
1994	E	2006	U	May	5
1995	F	2007	V	June	6
1996	H	2008	W	July	7
1997	J	2009	X	August	8
1998	K	2010	A	September	9
1999	L	2011	B	October	O
2000	M	2012	C	November	N
2001	N	⋮	⋮	December	D

repeats in a 20 year cycle

Country of origin

Japan

■ Absolute Maximum Ratings

(T_a=25°C)

	Parameter	Symbol	Rating	Unit
Input	Forward current	I_F	20	mA
	Reverse voltage	V_R	5	V
	Power dissipation	P	40	mW
Output	Supply voltage	V_{CC}	7	V
	*1 Enable voltage	V_E	5.5	V
	High level output voltage	V_{OH}	7	V
	Low level output current	I_{OL}	50	mA
	Collector power dissipation	P_C	85	mW
Operating temperature		T_{opr}	−40 to +85	°C
Storage temperature		T_{stg}	−55 to +125	°C
*2 Isolation voltage		$V_{iso\ (rms)}$	5.0	kV
*3 Soldering temperature		T_{sol}	270	°C

*1 Shall not exceed 500mV from supply voltage (V_{CC})
*2 40 to 60%RH, AC for 1minute, f=60Hz
*3 For 10s

■ Electro-optical Characteristics*4

(unles otherwise specified T_a=−40 to 85°C)

	Parameter		Symbol	Conditions	MIN.	TYP.	MAX.	Unit
Input	Forward voltage		V_F	T_a=25°C, I_F=10mA	–	1.6	1.9	V
	Reverse current		I_R	T_a=25°C, V_R=5V	–	–	10	μA
	Terminal capacitance		C_t	T_a=25°C, V=0, f=1MHz	–	60	150	pF
Output	High level output voltage		I_{OH}	V_{CC}=V_O=5.5V, V_E=2.0V, I_F=250μA	–	0.02	100	μA
	Low level output voltage		V_{OL}	V_{CC}=5.5V, V_E=2.0V, I_F=5mA, I_{OL}=13mA	–	0.4	0.6	V
	High level enable current		I_{EH}	V_{CC}=5.5V, V_E=2.0V	–	−0.5	−1.6	mA
	Low level enable current		I_{EL}	V_{CC}=5.5V, V_E=0.5V	–	−0.7	−1.6	mA
	High level supply current		I_{CCH}	V_{CC}=5.5V, V_E=2.0V, I_F=0	–	5	10	mA
				V_{CC}=5.5V, V_E=0.5V, I_F=0	–	5	–	mA
	Low level supply current		I_{CCL}	V_{CC}=5.5V, V_E=2.0V, I_F=10mA	–	7	13	mA
				V_{CC}=5.5V, V_E=0.5V, I_F=10mA	–	5.5	–	mA
Transfer characteristics	"High→Low" input threshold current		I_{FHL}	V_{CC}=5V,V_E=2.0V, V_O=0.8V, R_L=350Ω	–	2.5	5	mA
	Isolation resistance		R_{ISO}	T_a=25°C, DC500V, 40 to 60%RH	5×10^{10}	10^{11}	–	Ω
	Floating capacitance		C_f	T_a=25°C, V=0, f=1MHz	–	0.6	5	pF
	Response time	"High→Low" propagation delay time	t_{PHL}	T_a=25°C, I_F=7.5mA, V_{CC}=5V, R_L=350Ω, C_L=15pF,	25	48	75	ns
		"Low→High" propagation delay time	t_{PLH}		25	50	75	ns
		Rise time	t_r		–	10	–	ns
		Fall time	t_f		–	20	–	ns
		*5 Distortion of pulse width	Δt_w		–	–	35	ns
		"High→Low" enable propagation delay time	t_{EHL}	T_a=25°C, I_F=7.5mA, V_{CC}=5V, R_L=350Ω, C_L=15pF, V_{EH}=3V V_{EL}=0.5V	–	15	–	ns
		"Low→High" enable propagation delay time	t_{ELH}		–	10	–	ns
	Instantaneous common mode rejection voltage (High level output)		CM_H	T_a=25°C, I_F=0, V_{CC}=5V, V_{CM}=1kV$_{(P-P)}$, R_L=350Ω, $V_{O\ (Min)}$=2V	10	20	–	kV/μs
	Instantaneous common mode rejection voltage (Low level output)		CM_L	T_a=25°C, I_F=5mA, V_{CC}=5V, V_{CM}=1kV$_{(P-P)}$, R_L=350Ω, $V_{O\ (Max)}$=0.8V	−10	−20	–	kV/μs

*4 It shall connect a by-pass capacitor of 0.01μF or more between V_{CC} (pin ⑧) and GND (pin ⑤) near the device, when it measures the transfer characteristics and the output side characteristics
*5 Distortion of pulse width $\Delta t_w = | t_{PHL} - t_{PLH} |$

■ Model Line-up

Lead Form	Through-Hole	
Package	Sleeve	
	50pcs/sleeve	
VDE0884	———	Approved
Model No.	**PC910L0NSZ**	**PC910L0YSZ**

Please contact a local SHARP sales representative to inquire about production status and Lead-Free options.

Fig.1 Test Circuit for Propagation Delay Time and Rise Time, Fall Time

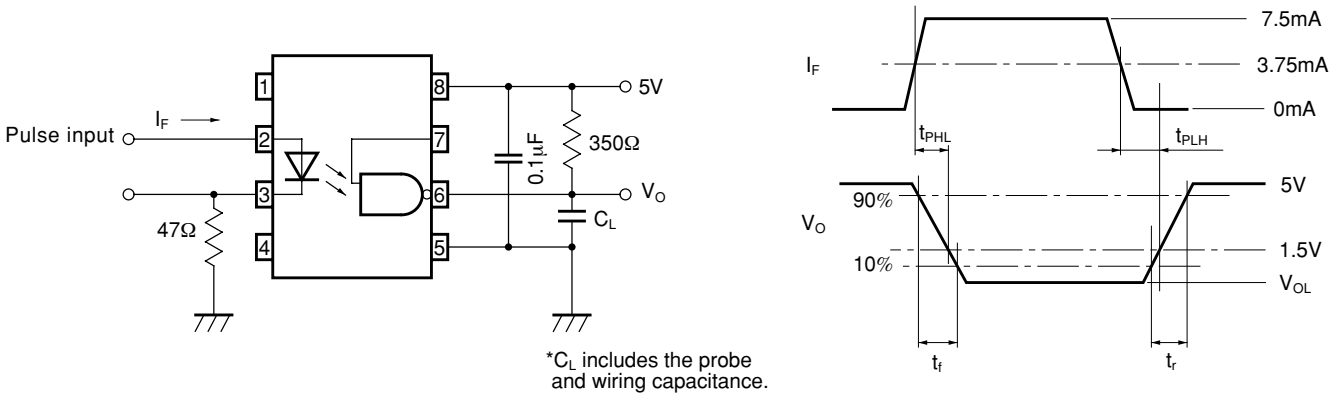

Fig.2 Test Circuit for Enable Propagation Delay Time

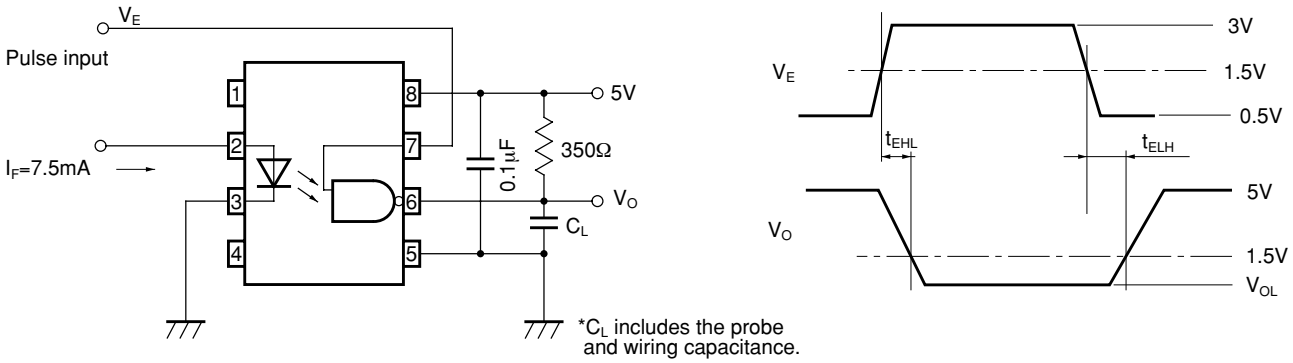

Fig.3 Test Circuit for Instantaneous Common Mode Rejection Voltage

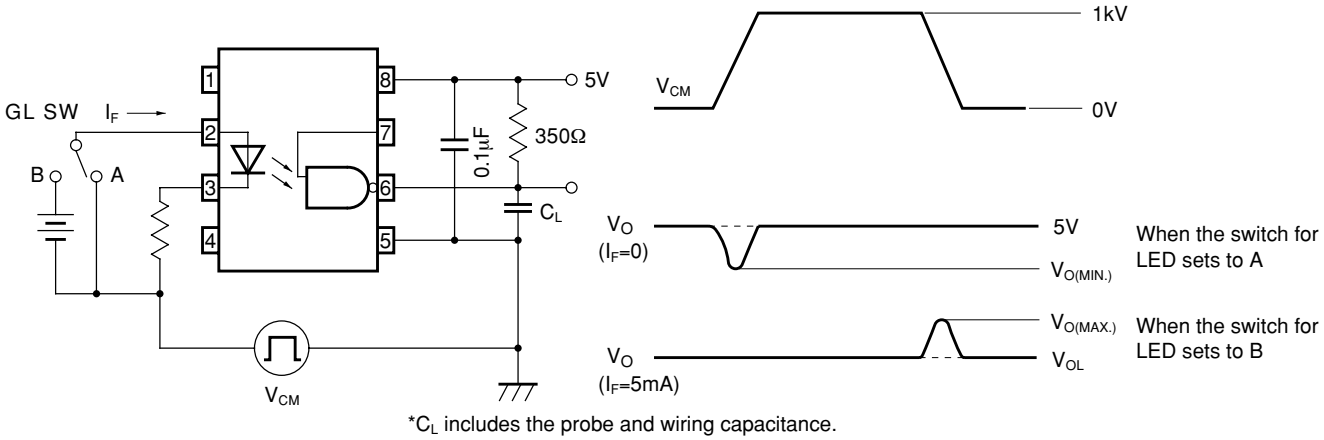

Fig.4 Forward Current vs. Ambient Temperature

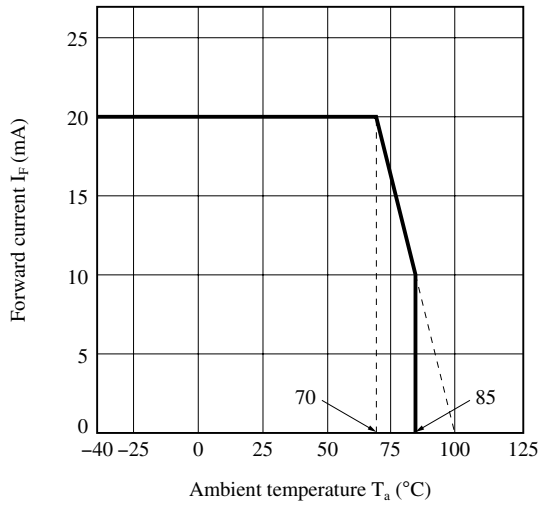

Fig.5 Collector Power Dissipation vs. Ambient Temperature

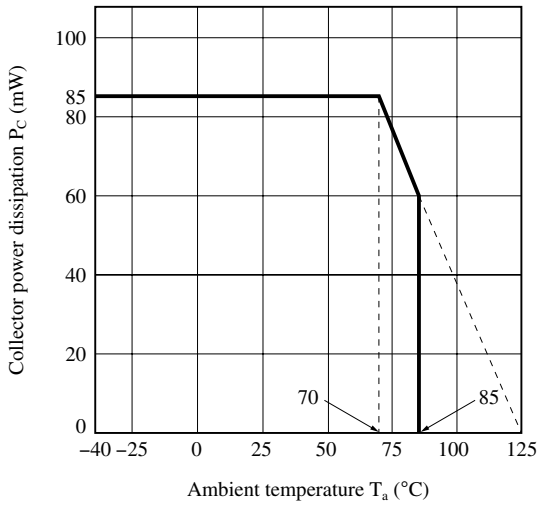

Fig.6 Forward Current vs. Forward Voltage

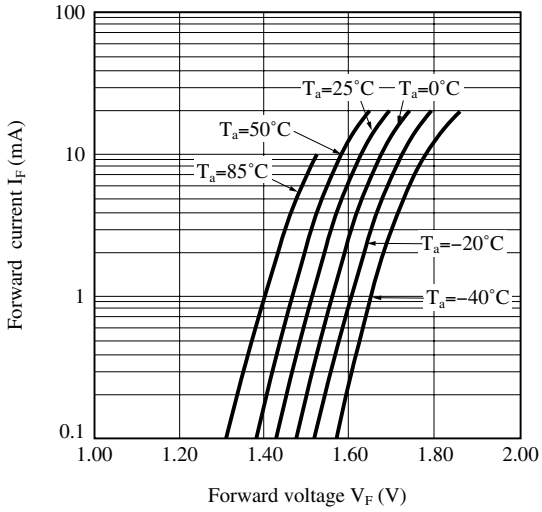

Fig.7 High Level Output Current vs. Ambient Temperature

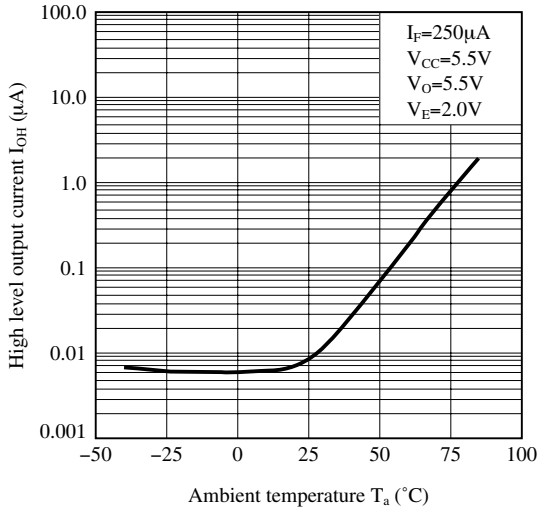

Fig.8 Low Level Output Voltage vs. Ambient Temperature

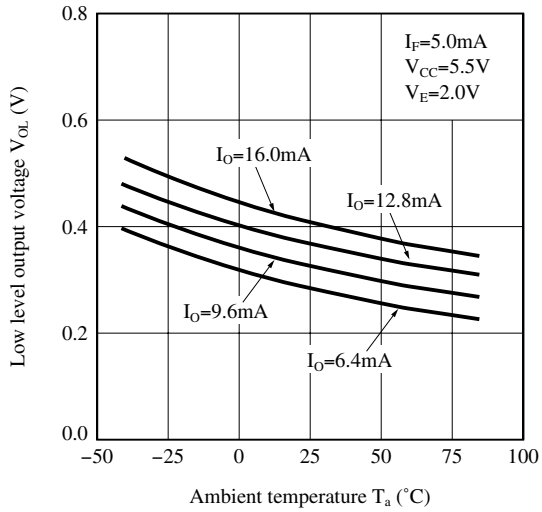

Fig.9 Input Threshold Current vs. Ambient Temperature

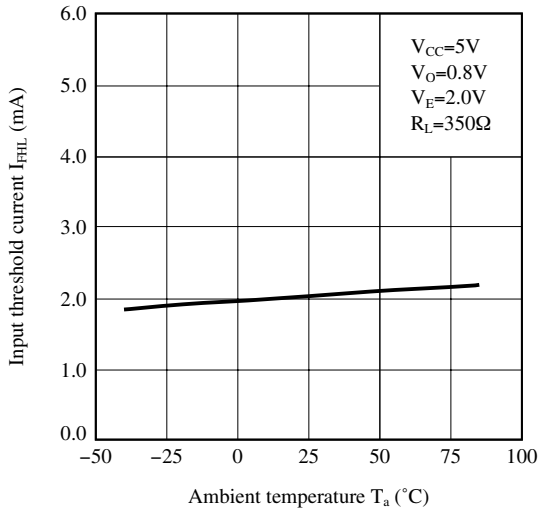

Fig.10 Output Voltage vs. Forward Current

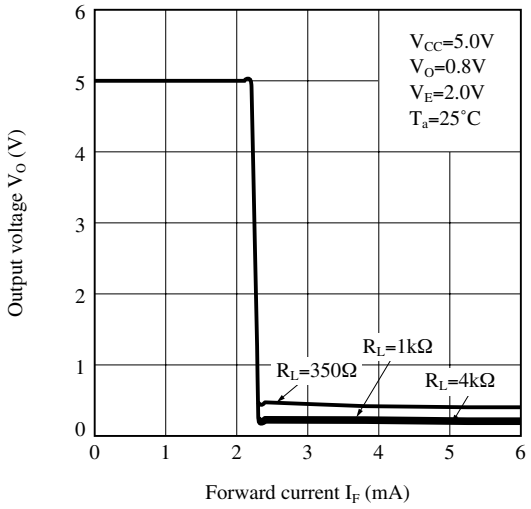

Fig.11 Propagation Delay Time vs. Forward Current

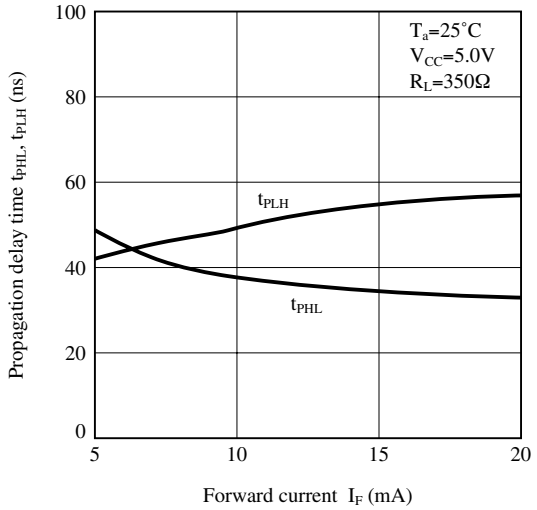

Fig.12 Propagation Delay Time vs. Ambient Temperature

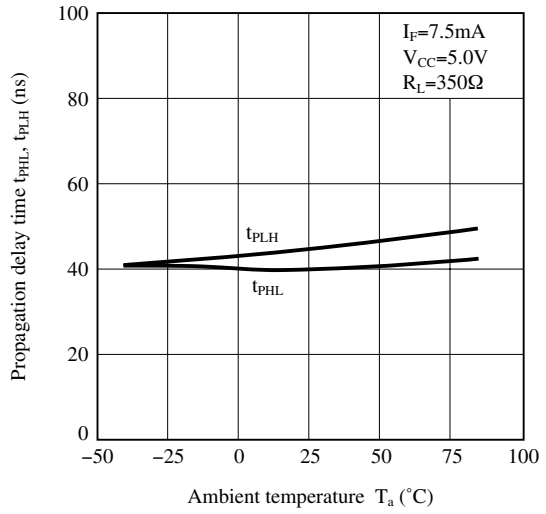

Remarks : Please be aware that all data in the graph are just for reference and not for guarantee.

■ Design Considerations

● Recommended operating conditions

Parameter	Symbol	MIN.	TYP.	MAX.	Unit
Low level input current	I_{FL}	0	–	250	μA
High level input current	I_{FH}	8	–	15	mA
High level enable input voltage	V_{EH}	2.0	–	V_{CC}	V
Low level enable input voltage	V_{EL}	0	–	0.8	V
Supply voltage	V_{CC}	4.5	–	5.5	V
Fan out (TTL load)	N	–	–	8	–
Operating temperature	T_{opr}	–40	–	70	˚C

● Notes about static electricity

Transistor of detector side in bipolar configuration may be damaged by static electricity due to its minute design.
When handling these devices, general countermeasure against static electricity should be taken to avoid breakdown of devices or degradation of characteristics.

● Design guide

In order to stabilize power supply line, we should certainly recommend to connect a by-pass capacitor of 0.01μF or more between V_{CC} and GND near the device.

In case that some sudden big noise caused by voltage variation is provided between primary and secondary terminals of photocoupler some current caused by it is floating capacitance may be generated and result in false operation since current may go through LED or current may change.
If the photocoupler may be used under the circumstances where noise will be generated we recommend to use the bypass capacitors at the both ends of LED.

The detector which is used in this device, has parasitic diode between each pins and GND.
There are cases that miss operation or destruction possibly may be occurred if electric potential of any pin becomes below GND level even for instant.
Therefore it shall be recommended to design the circuit that electric potential of any pin does not become below GND level.

This product is not designed against irradiation and incorporates non-coherent LED.

● Degradation

In general, the emission of the LED used in photocouplers will degrade over time.
In the case of long term operation, please take the general LED degradation (50% degradation over 5years) into the design consideration.
Please decide the input current which become 2times of MAX. I_{FHL}.

☆ For additional design assistance, please review our corresponding Optoelectronic Application Notes.

■ Manufacturing Guidelines

● Soldering Method

Flow Soldering :

Due to SHARP's double transfer mold construction submersion in flow solder bath is allowed under the below listed guidelines.

Flow soldering should be completed below 270˚C and within 10s.
Preheating is within the bounds of 100 to 150˚C and 30 to 80s.
Please don't solder more than twice.

Hand soldering

Hand soldering should be completed within 3s when the point of solder iron is below 400˚C.
Please don't solder more than twice.

Other notices

Please test the soldering method in actual condition and make sure the soldering works fine, since the impact on the junction between the device and PCB varies depending on the tooling and soldering conditions.

● Cleaning instructions

Solvent cleaning:

Solvent temperature should be 45˚C or below Immersion time should be 3minutes or less

Ultrasonic cleaning:

The impact on the device varies depending on the size of the cleaning bath, ultrasonic output, cleaning time, size of PCB and mounting method of the device.
Therefore, please make sure the device withstands the ultrasonic cleaning in actual conditions in advance of mass production.

Recommended solvent materials:

Ethyl alcohol, Methyl alcohol and Isopropyl alcohol
In case the other type of solvent materials are intended to be used, please make sure they work fine in actual using conditions since some materials may erode the packaging resin.

● Presence of ODC

This product shall not contain the following materials.
And they are not used in the production process for this device.
Regulation substances : CFCs, Halon, Carbon tetrachloride, 1.1.1-Trichloroethane (Methylchloroform)
Specific brominated flame retardants such as the PBBOs and PBBs are not used in this product at all.

■ Package specification

● Sleeve package

Package materials

Sleeve : HIPS (with anti-static material)

Stopper : Styrene-Elastomer

Package method

MAX. 50 pcs. of products shall be packaged in a sleeve.

Both ends shall be closed by tabbed and tabless stoppers.

The product shall be arranged in the sleeve with its primary side mark on the tabless stopper side.

MAX. 20 sleeves in one case.

Sleeve outline dimensions

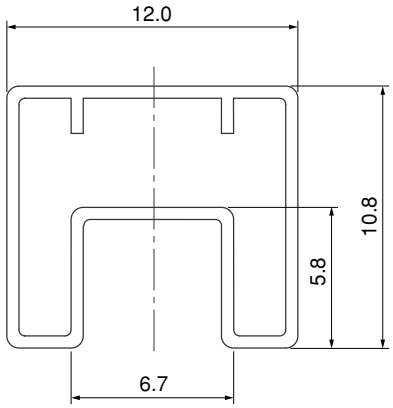

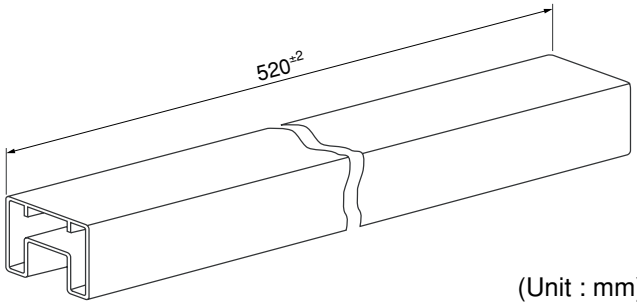

(Unit : mm)

■ Important Notices

· The circuit application examples in this publication are provided to explain representative applications of SHARP devices and are not intended to guarantee any circuit design or license any intellectual property rights. SHARP takes no responsibility for any problems related to any intellectual property right of a third party resulting from the use of SHARP's devices.

· Contact SHARP in order to obtain the latest device specification sheets before using any SHARP device. SHARP reserves the right to make changes in the specifications, characteristics, data, materials, structure, and other contents described herein at any time without notice in order to improve design or reliability. Manufacturing locations are also subject to change without notice.

· Observe the following points when using any devices in this publication. SHARP takes no responsibility for damage caused by improper use of the devices which does not meet the conditions and absolute maximum ratings to be used specified in the relevant specification sheet nor meet the following conditions:

(i) The devices in this publication are designed for use in general electronic equipment designs such as:

--- Personal computers
--- Office automation equipment
--- Telecommunication equipment [terminal]
--- Test and measurement equipment
--- Industrial control
--- Audio visual equipment
--- Consumer electronics

(ii) Measures such as fail-safe function and redundant design should be taken to ensure reliability and safety when SHARP devices are used for or in connection with equipment that requires higher reliability such as:

--- Transportation control and safety equipment (i.e., aircraft, trains, automobiles, etc.)
--- Traffic signals
--- Gas leakage sensor breakers
--- Alarm equipment
--- Various safety devices, etc.

(iii) SHARP devices shall not be used for or in connection with equipment that requires an extremely high level of reliability and safety such as:

--- Space applications
--- Telecommunication equipment [trunk lines]
--- Nuclear power control equipment
--- Medical and other life support equipment (e.g., scuba).

· If the SHARP devices listed in this publication fall within the scope of strategic products described in the Foreign Exchange and Foreign Trade Law of Japan, it is necessary to obtain approval to export such SHARP devices.

· This publication is the proprietary product of SHARP and is copyrighted, with all rights reserved. Under the copyright laws, no part of this publication may be reproduced or transmitted in any form or by any means, electronic or mechanical, for any purpose, in whole or in part, without the express written permission of SHARP. Express written permission is also required before any use of this publication may be made by a third party.

· Contact and consult with a SHARP representative if there are any questions about the contents of this publication.

Looking for pricing, stock, or lifecycle information?

Click below to explore more details on WIN SOURCE:

- View PC910L0NSZ on WIN SOURCE
- Sharp Microelectronics Information

Optimize Your Supply Chain with WIN SOURCE Solutions

- Global Sourcing Solution
- Obsolete Management
- Cost Control Management
- Shortage Management
- Alternative Solution
- Excess Inventory Management