THE DATASHEET OF

PAM8406DR

www.win-source.net 0086-755-83957316

Description

The PAM8406 is a 5W audio amplifier with an alternative option between Class-D and Class-AB output, which makes the device very ideal for efficiency-EMI compatible applications.

The PAM8406's low THD+N and high SNR allow it to achieve high-quality sound reproduction. The device's fully differential output with new filter-less architecture (Class-D Mode) allows the device to drive the speaker directly, requiring no low-pass output filters and DC blocking capacitors, thus saving system cost and PCB area.

The device has an efficiency of up to 90%. It can extend battery life, which is ideal for portable applications. It is fully protected against faults with short-circuit protection and thermal protection.

The PAM8406 is available in the SOP-16L/SOP-16(EP) package.

Pin Assignments

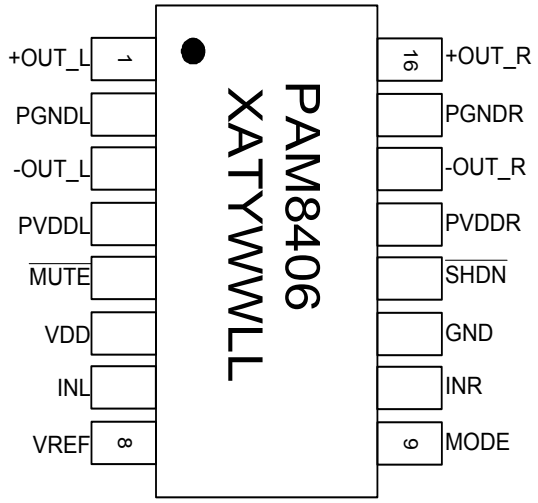

Features

- Alternative Output: Class-D or Class-AB
- 5W Output at 10% THD with a 2Ω Load and 5V Power Supply at Class-D Mode
- 3W Output at 10% THD with a 4Ω Load and 5V Power Supply
- Filterless, Low Quiescent Current and No EMI
- Low THD+N at Fully Output Range
- Superior Low Noise
- Efficiency up to 90% with Class-D Mode
- No Pop At Turn-On/Off
- Full Short-Circuit Protection With Auto Recovery
- Thermal Shutdown
- Few External Components to Save Space and Cost
- **Totally Lead-Free & Fully RoHS Compliant (Notes 1 & 2)**
- **Halogen- and Antimony-Free. "Green" Device (Note 3)**
- **For automotive applications requiring specific change control (i.e. parts qualified to AEC-Q100/101/200, PPAP capable, and manufactured in IATF 16949 certified facilities), please contact us or your local Diodes representative. https://www.diodes.com/quality/product-definitions/**

Applications

- LCD TVs
- Multimedia Speakers
- AM/FM Systems
- DABs

Notes:
1. No purposely added lead. Fully EU Directive 2002/95/EC (RoHS), 2011/65/EU (RoHS 2) & 2015/863/EU (RoHS 3) compliant.
2. See https://www.diodes.com/quality/lead-free/ for more information about Diodes Incorporated's definitions of Halogen- and Antimony-free, "Green" and Lead-free.
3. Halogen- and Antimony-free "Green" products are defined as those which contain <900ppm bromine, <900ppm chlorine (<1500ppm total Br + Cl) and <1000ppm antimony compounds.

© Diodes Incorporated

Typical Applications Circuit

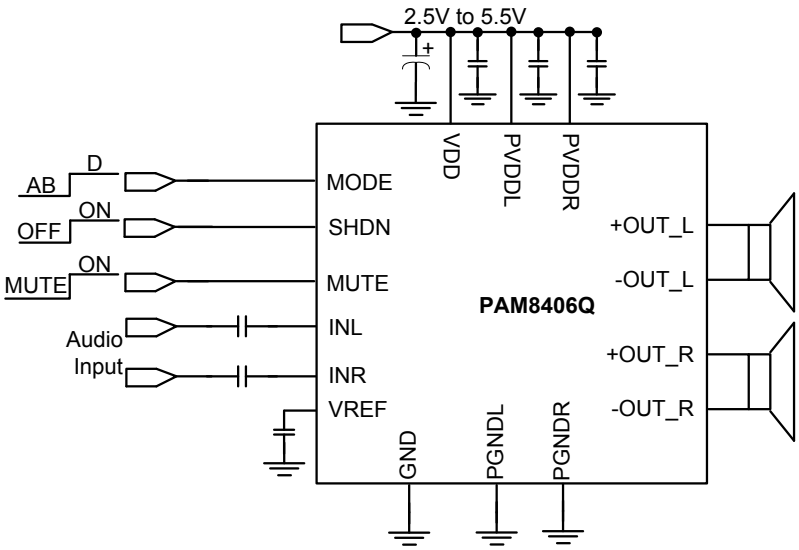

Pin Descriptions

Pin Number	Pin Name	Function
1	+OUT_L	Left Channel Positive Output
2	PGNDL	Power GND
3	-OUT_L	Left Channel Negative Output
4	PVDDL	Power VDD
5	$\overline{\text{MUTE}}$	Mute Control Input (active low)
6	VDD	Analog VDD
7	INL	Left Channel Input
8	VREF	Internal analog reference, connect a bypass capacitor from VREF to GND.
9	MODE	High: Class-D; Low: Class-AB
10	INR	Right Channel Input
11	GND	Analog GND
12	$\overline{\text{SHND}}$	Shutdown Control Input (active low)
13	PVDDR	Power VDD
14	-OUT_R	Right Channel Negative Output
15	PGNDR	Power GND
16	+OUT_R	Right Channel Positive Output

© Diodes Incorporated

Functional Block Diagram

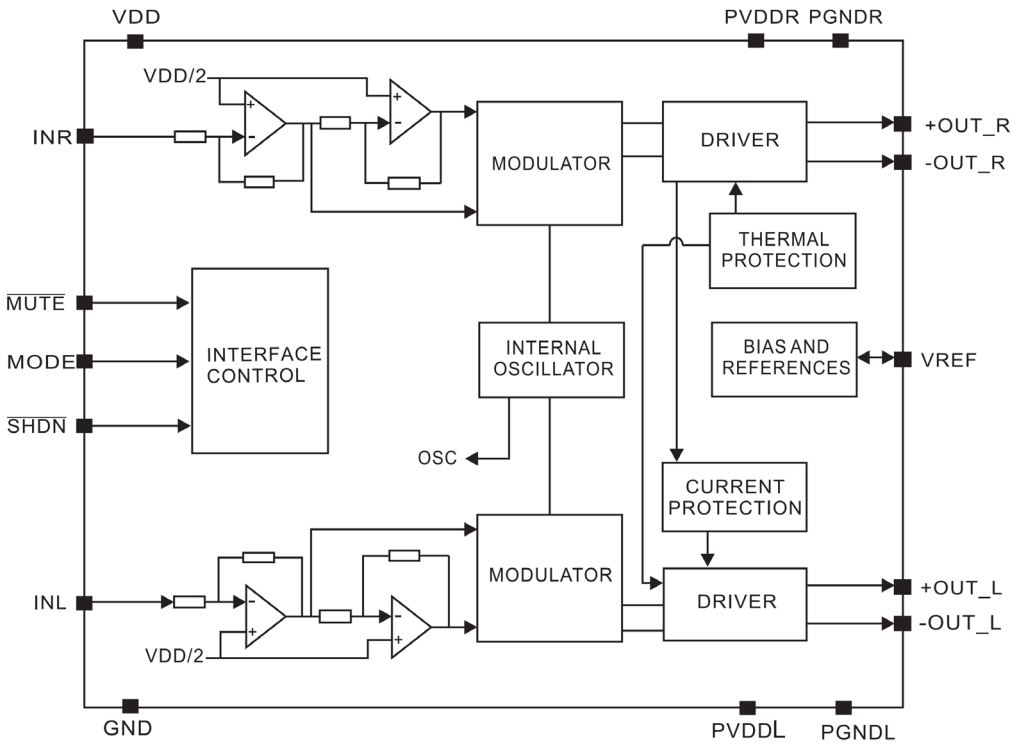

Absolute Maximum Ratings (@ T_A = +25°C, unless otherwise specified.)

These are stress ratings only and functional operation is not implied. Exposure to absolute maximum ratings for prolonged time periods may affect device reliability. All voltages are with respect to ground.

Parameter	Rating	Unit
Supply Voltage	6.0	V
Input Voltage	-0.3 to V_{DD} +0.3V	
Operation Temperature Range	-40 to +85	°C
Maximum Junction Temperature	150	
Operation Junction Temperature	-40 to +125	
Storage Temperature	-65 to +150	
Soldering Temperature	300, 5 sec	

Recommended Operating Conditions (@ T_A = +25°C, unless otherwise specified.)

Parameter	Rating	Unit
Supply Voltage Range	2.5 to 5.5	V
Operation Temperature Range	-40 to +85	°C
Junction Temperature Range	-40 to +125	°C

Thermal Information

Parameter	Package	Symbol	Max	Unit
Thermal Resistance (Junction to Ambient)	SOP-16	θ_{JA}	110	°C/W
Thermal Resistance (Junction to Case)	SOP-16	θ_{JC}	23	

© Diodes Incorporated

Electrical Characteristics (@ T_A = +25°C, V_{DD} = 5V, Gain = 24dB, R_L = 8Ω, both Class-AB and D mode, unless otherwise specified.)

Symbol	Parameter	Test Conditions		Min	Typ	Max	Units
V_{DD}	Supply Voltage			2.5		5.5	V
P_O	Output Power	THD+N = 10%, f = 1KHz, R_L = 2Ω (Class-D)	V_{DD} = 5.0V		5.0		W
			V_{DD} = 3.6V		2.6		
			V_{DD} = 2.5V		1.3		
		THD+N = 1%, f = 1KHz, R_L = 2Ω (Class-D)	V_{DD} = 5.0V		4.0		W
			V_{DD} = 3.6V		2.0		
			V_{DD} = 2.5V		1.0		
		THD+N = 10%, f = 1KHz, R_L = 4Ω	V_{DD} = 5.0V		3.14		W
			V_{DD} = 3.6V		1.5		
			V_{DD} = 2.5V		0.76		
		THD+N = 1%, f = 1KHz, R_L = 4Ω	V_{DD} = 5.0V		2.55		W
			V_{DD} = 3.6V		1.45		
			V_{DD} = 2.5V		0.63		
		THD+N = 10%, f = 1KHz, R_L = 8Ω	V_{DD} = 5.0V		1.8		W
			V_{DD} = 3.6V		0.92		
			V_{DD} = 2.5V		0.44		
		THD+N = 1%, f = 1KHz, R_L = 8Ω	V_{DD} = 5.0V		1.6		W
			V_{DD} = 3.6V		0.76		
			V_{DD} = 2.5V		0.36		
THD+N	Total Harmonic Distortion Plus Noise	V_{DD} = 5.0V, P_O = 0.1W to 1W , R_L = 8Ω	f = 1kHz		0.15		%
		V_{DD} = 3.6V, P_O = 0.05W to 0.5W, R_L = 8Ω			0.11		
		V_{DD} = 5.0V, P_O = 0.1W to 2W, R_L = 4Ω	f = 1kHz		0.15		%
		V_{DD} = 3.6V, P_O = 0.05W to 2W, R_L = 4Ω			0.11		
		V_{DD} = 5.0V, P_O = 0.1W to 2W, R_L = 2Ω (Class-D)	f = 1kHz		0.15		%
		V_{DD} = 3.6V, P_O = 0.05W to 1W, R_L = 2Ω (Class-D)			0.11		
G_V	Closed Loop Gain	V_{DD} = 3V to 5V			24		dB
PSRR	Power Supply Ripple Rejection	V_{DD} = 5.0V, Inputs AC-Grounded with C_{IN} = 0.47μF	f = 100Hz		-70		dB
			f = 1kHz		-65		
C_S	Crosstalk	V_{DD} = 5.0V, P_O = 0.5W, R_L = 8Ω, G_V = 24db	f = 1kHz		-95		dB
SNR	Signal-to-Noise Ratio	V_{DD} = 5.0V, THD = 1%, G_V = 24db	f = 1kHz		90		dB
V_N	Output Noise	V_{DD} = 5.0V, Inputs AC-Grounded	A-Weighting		100		μV
			No A-Weighting		150		
η	Efficiency	R_L = 8Ω, THD = 10%	Class D Mode f = 1kHz		90		%
		R_L = 4Ω, THD = 10%			87		
		R_L = 2Ω, THD = 10%			80		
I_Q	Quiescent Current	V_{DD} = 5.0V	No Load		10		mA
		V_{DD} = 3.6V			8		
		V_{DD} = 2.5V			6		
	Quiescent Current	V_{DD} = 5.0V	No Load		25		mA
		V_{DD} = 3.6V			15		
		V_{DD} = 2.5V			10		

© Diodes Incorporated

Electrical Characteristics (cont.) (@ T_A = +25°C, V_{DD} = 5V, Gain = 24dB, R_L = 8Ω, both Class-AB and D mode, unless otherwise specified.)

Symbol	Parameter	Test Conditions		Min	Typ	Max	Units
I_{MUTE}	Muting Current	V_{DD} = 5.0V	V_{MUTE} = 0.3V		2.4		mA
I_{SD}	Shutdown Current	V_{DD} = 2.5V to 5.5V	V_{SD} = 0.3V		< 1		μA
$R_{DS(ON)}$	Static Drain-to-Source On-State Resistor	I_{DS} = 500mA, V_{GS} = 5V	PMOS		180		mΩ
			NMOS		140		
f_{SW}	Switching Frequency	V_{DD} = 2.5V to 5.5V	Class-D		250		kHz
V_{OS}	Output Offset Voltage	Input AC-GND, V_{DD} = 5.0V			10		mV
V_{IH}	Enable Input High Voltage	V_{DD} = 5.0V		1.4			V
V_{IL}	Enable Input Low Voltage	V_{DD} = 5.0V				0.4	
V_{IH}	MUTE Input High Voltage	V_{DD} = 5.0V		1.4			V
V_{IL}	MUTE Input Low Voltage	V_{DD} = 5.0V				0.4	
V_{IH}	MODE Input High Voltage	V_{DD} = 5.0V		1.4			V
V_{IL}	MODE Input Low Voltage	V_{DD} = 5.0V				0.4	
OTP	Overtemperature Protection	No Load, Junction Temperature	V_{DD} = 5.0V		150		°C
OTH	Overtemperature Hysterisis				30		

© Diodes Incorporated

Typical Performance Characteristics (@ T_A = +25°C, V_{DD} = 5V, Gain = 24dB, R_L = 8Ω, both Class-AB and D mode, unless otherwise specified.)

1. THD+N vs Output Power

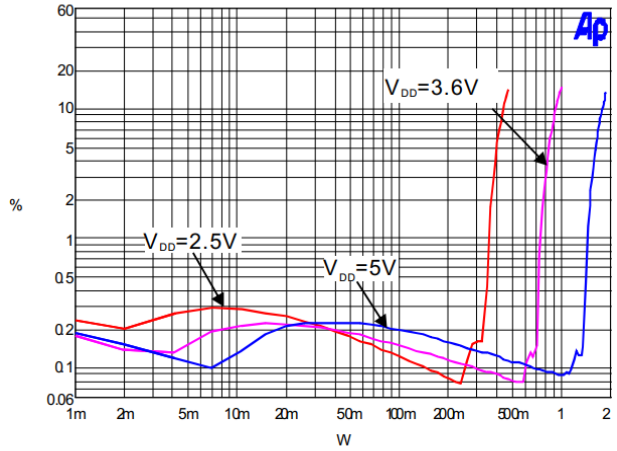

Class D, R_L=8Ω, f=1kHz

2. THD+N vs Output Power

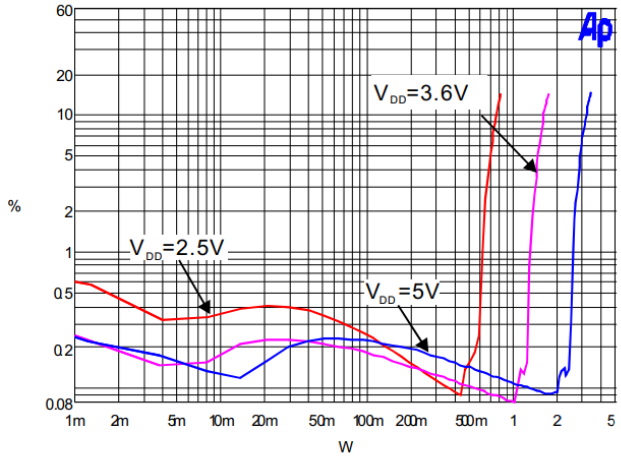

Class D, R_L=4Ω, f=1kHz

3. THD+N vs Output Power

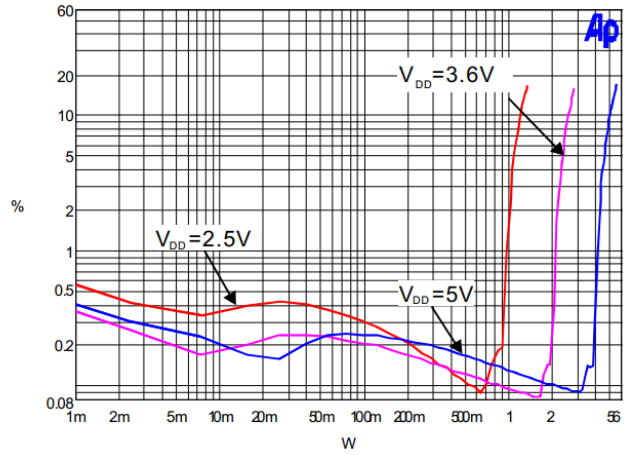

Class D, R_L=2Ω, f=1kHz

4. THD+N vs Output Power

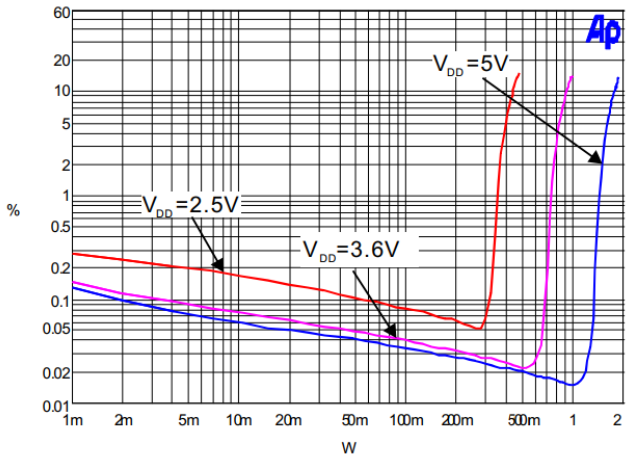

Class AB, R_L=8Ω, f=1kHz

5. THD+N vs Output Power

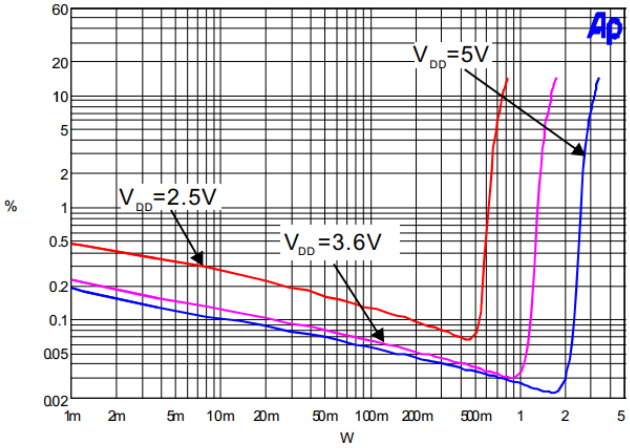

Class AB, R_L=4Ω, f=1kHz

6. Frequency Response

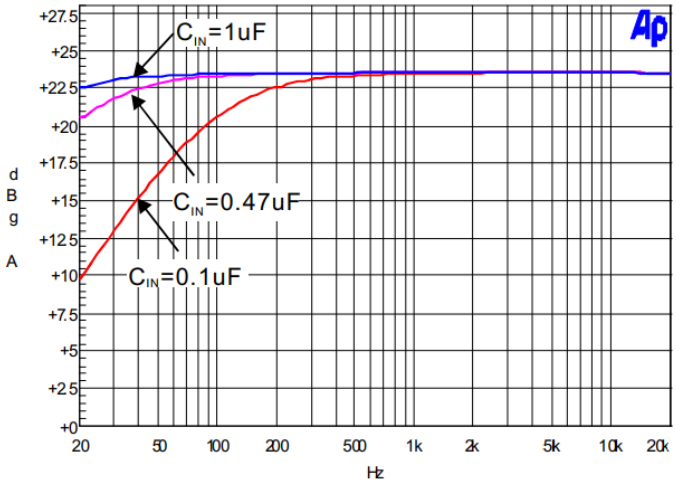

© Diodes Incorporated

Typical Performance Characteristics (cont.) (@ T_A = +25°C, V_{DD} = 5V, Gain = 24dB, R_L = 8Ω, both Class-AB and D mode, unless otherwise specified.)

7. THD+N vs Frequency (Class D)

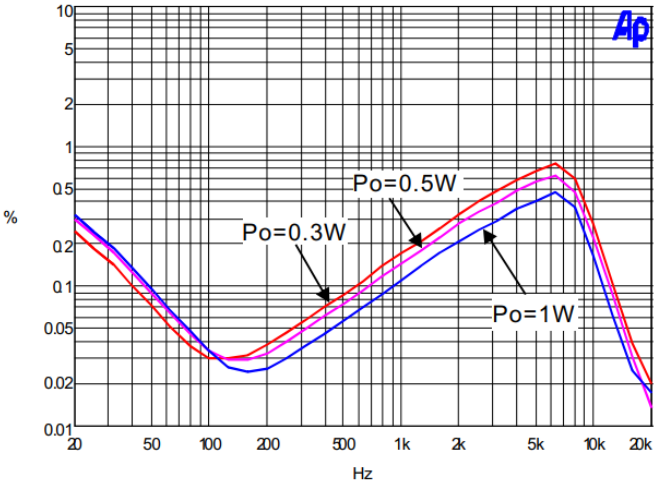

8. THD+N vs Output Power (Class AB)

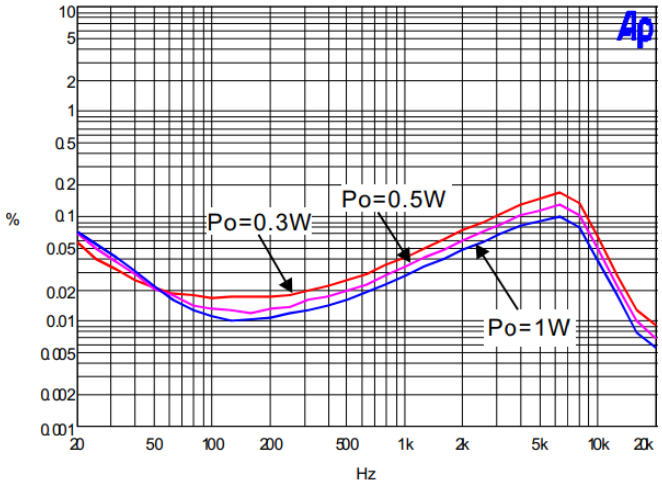

9.Noise Floor (Class D)

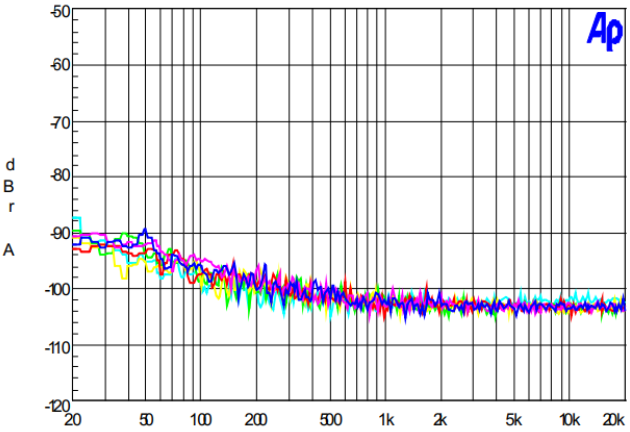

R_L=4Ω,Vin=2.5V/3.3V/3.6V/4.2/5V/5.5V

10. Noise Floor (Class AB)

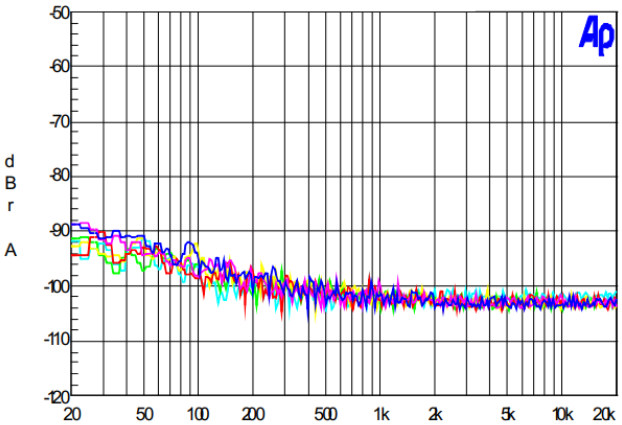

R_L=4Ω,Vin=2.5V/3.3V/3.6V/4.2/5V/5.5V

11. PSRR (Class D)

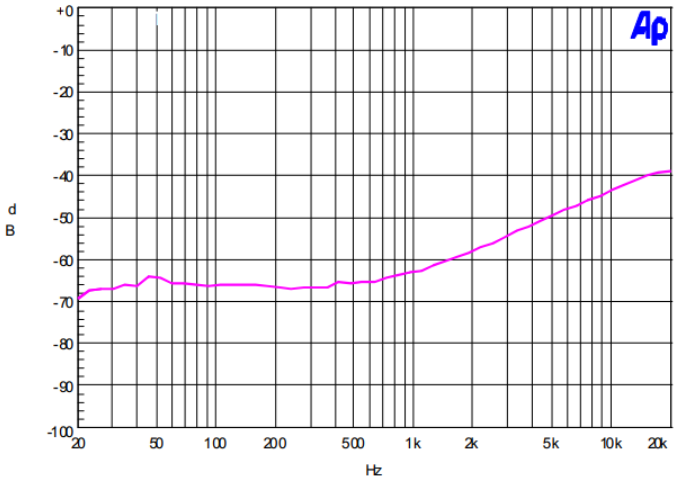

12. PSRR (Class AB)

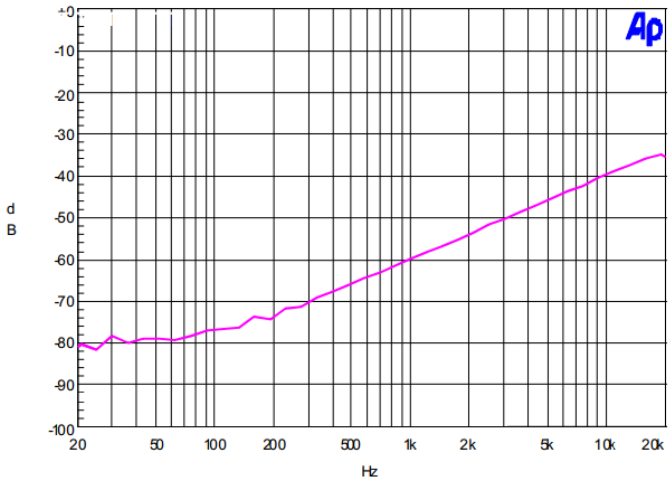

© Diodes Incorporated

Typical Performance Characteristics (cont.) (@ T_A = +25°C, V_{DD} = 5V, Gain = 24dB, R_L = 8Ω, both Class-AB and D mode, unless otherwise specified.)

13. Quiescent Current vs Supply Voltage

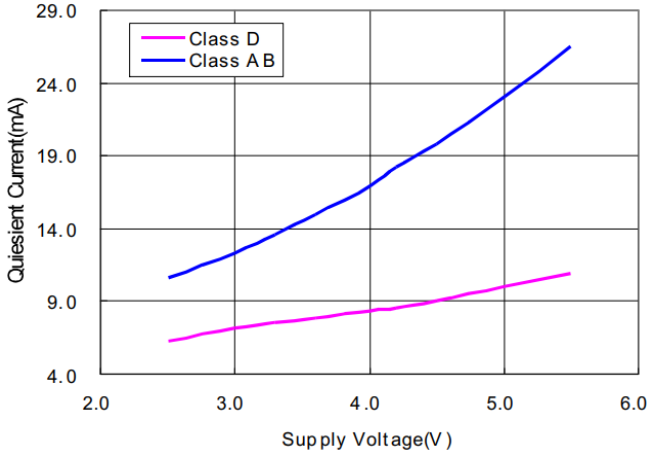

14. Frequency vs Supply Voltage

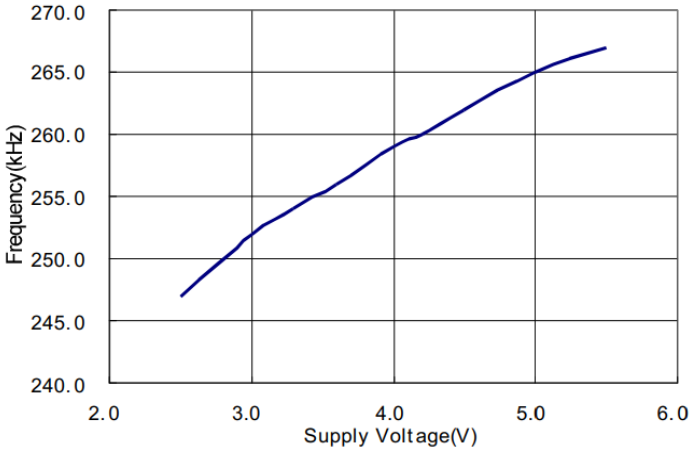

15.Rds(on) vs Iload

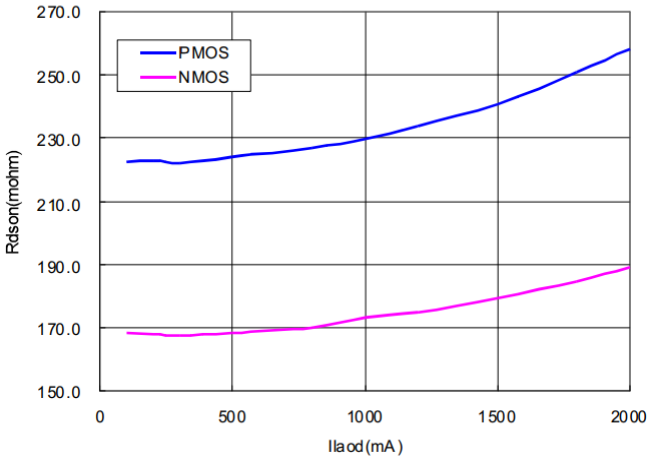

16. Efficiency vs Output Power(Class D)

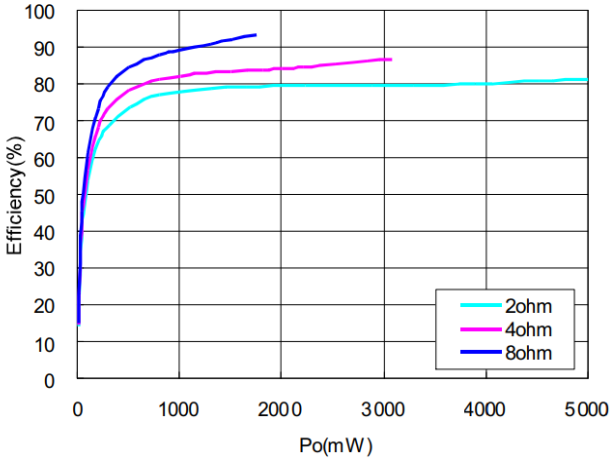

17. Output Power vs Power Supply

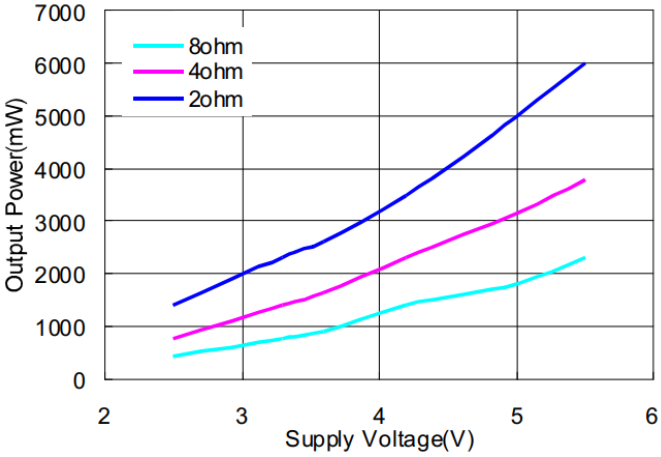

© Diodes Incorporated

Application Information

Application Note

1. When the PAM8406 works in Class-D with LC filters, it should be connected with the speaker before it is powered on, otherwise it will be damaged easily.

2. When the PAM8406 works without LC filters, it's better to add a ferrite chip bead at the outgoing line of speaker for suppressing the possible electromagnetic interference.

3. The recommended operating voltage is 5.5V. When the PAM8406 is powered with four battery cells, it should be noted that the voltage of four new dry or alkaline batteries is over 6.0V, which is higher than its operation voltage and will likely damage the device. Therefore, it is recommended to use either four Ni-MH (Nickel Metal Hydride) rechargeable batteries, or 3 dry or alkaline batteries.

4. One should not make the input signal too large. A large signal can cause the clipping of output signal when increasing the volume. This will damage the device from the PAM8406's big gain.

Test Setup for Performance Testing

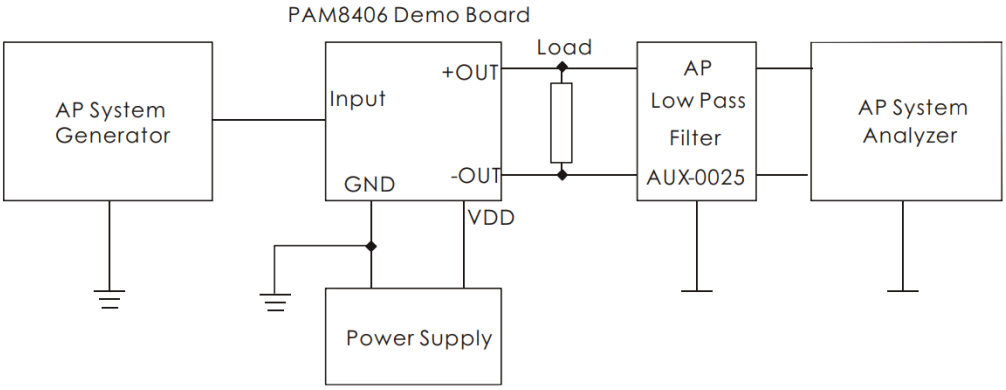

Notes: A. The AP AUX-0025 low pass filter is necessary for Class-D amplifier measurement with AP analyzer.
B. Two 22μH inductors are used in series with load resistor to emulate the small speaker for efficiency measurement.

Maximum Gain

As shown in block diagram (Page 2), the PAM8406 has two internal amplifier stages. The first stage's gain is externally configurable, while the second stage's is internally fixed. The closed-loop gain of the first stage is set by selecting the ratio of R_F to R_I while the second stage's gain is fixed at 2x.The output of amplifier 1 serves as the input to amplifier 2, thus the two amplifiers produce signals identical in magnitude, but different in phase by 180°. Consequently, the differential gain for the IC is

$$A_{VD} = 20*\log [2*(R_F/R_I)]$$

The PAM8406 sets maximum R_F =142kΩ, minimum R_I =18kΩ; so the maximum closed-gain is 24dB.

Mode Selection

When mode pin high, it features Class-D; mode pin low, it's class AB. Mode pin can't be floating.

Mute Operation

The $\overline{\text{MUTE}}$ pin is an input for controlling the output state of the PAM8406. A logic low on this pin disables the outputs, and a logic high on this pin enables the outputs. This pin may be used as a quick disable or enable of the outputs without a volume fade. Quiescent current is listed in the electrical characteristic table. The $\overline{\text{MUTE}}$ pin can be left floating due to the internal pull-up.

Shutdown Operation

In order to reduce power consumption while not in use, the PAM8406 contains shutdown circuitry to turn off the amplifier's bias circuitry. This shutdown feature turns the amplifier off when logic low is applied to the $\overline{\text{SHDN}}$ pin. By switching the $\overline{\text{SHDN}}$ pin connected to GND, the PAM8406 supply current draw will be minimized in idle mode. The $\overline{\text{SHDN}}$ pin can be left floating due to the internal pull-up.

© Diodes Incorporated

Application Information (cont.)

Power Supply Decoupling

The PAM8406 is a high performance CMOS audio amplifier that requires adequate power supply decoupling to ensure the output THD and PSRR as low as possible. Power supply decoupling affects low frequency response. Optimum decoupling is achieved by using two capacitors of different types targeting to different types of noise on the power supply leads. For higher frequency transients, spikes, or digital hash on the line, a good low equivalent-series resistance (ESR) ceramic capacitor, typically 1.0μF, works best, placing it as close as possible to the device V_{DD} terminal. For filtering lower frequency noise signals, a large capacitor of 20μF (ceramic) or greater is recommended, placing it near the audio power amplifier.

Input Capacitor (C_I)

Large input capacitors are both expensive and space hungry for portable designs. Clearly, a certain sized capacitor is needed to couple in low frequencies without severe attenuation. But in many cases the speakers used in portable systems, whether internal or external, have little ability to reproduce signals below 100Hz to 150Hz. Thus, using a large input capacitor may not increase actual system performance. In this case, input capacitor (C_I) and input resistance (R_I) of the amplifier form a high-pass filter with the corner frequency determined by equation below,

$$f_C = \frac{1}{2\Pi R_I C_I}$$

In addition to system cost and size, click and pop performance is affected by the size of the input coupling capacitor, C_I. A larger input coupling capacitor requires more charge to reach its quiescent DC voltage (nominally 1/2 V_{DD}). This charge comes from the internal circuit via the feedback and is apt to create pops upon device enable. Thus, by minimizing the capacitor size based on necessary low frequency response, turn-on pops can be minimized.

Analog Reference Bypass Capacitor (C_{BYP})

The Analog Reference Bypass Capacitor (C_{BYP}) is the most critical capacitor and serves several important functions. During start-up or recovery from shutdown mode, C_{BYP} determines the rate at which the amplifier starts up. The second function is to reduce noise caused by the power supply coupling into the output drive signal. This noise is from the internal analog reference to the amplifier, which appears as degraded PSRR and THD+N.

A ceramic bypass capacitor (C_{BYP}) with values of 0.47μF to 1.0μF is recommended for the best THD and noise performance. Increasing the bypass capacitor reduces clicking and popping noise from power on/off and entering and leaving shutdown.

Undervoltage Lock-Out (UVLO)

The PAM8406 incorporates circuitry designed to detect low supply voltage. When the supply voltage drops to 2.0V or below, the PAM8406 outputs are disabled, and the device comes out of this state and starts to function normally when $V_{DD} \geq 2.2V$.

Short-Circuit Protection (SCP)

The PAM8406 has short-circuit protection circuitry on the outputs to prevent damage to the device when output-to-output or output-to-GND short occurs. When a short circuit is detected on the outputs, the outputs are disabled immediately. When the short is removed, the device activates again.

Overtemperature Protection

Thermal protection on the PAM8406 prevents the device from damage when the internal die temperature exceeds +150°C. There is a 15°C tolerance on this trip point from device to device. Once the die temperature exceeds the thermal set point, the device outputs are disabled. This is not a latched fault. The thermal fault is cleared once the temperature of the die is reduced by 30°C. This large hysteresis will prevent motor boating sound well and the device begins normal operation at this point without external system intervention.

© Diodes Incorporated

Ordering Information

PAM8406 X X

Package Type	Shipping Package
D: SOP-16 E: SOP-16(EP)	R: Tape & Reel

Part Number	Package (Note 5)	Tape and Reel Quantity	Part Marking	Status (Note 4)	Alternative
PAM8406DR	SOP-16	2500	PAM8406 XATYWWLL	Active	-
PAM8406ER	SOP-16(EP)	2500	PAM8406 XATYWWLL	NRND	PAM8406DR

Notes: 4. PAM8406ER is Not Recommended for New Design (NRND). The alternative part is PAM8406DR.
5. For packaging details, go to our website at https://www.diodes.com/design/support/packaging/diodes-packaging/.

Marking Information

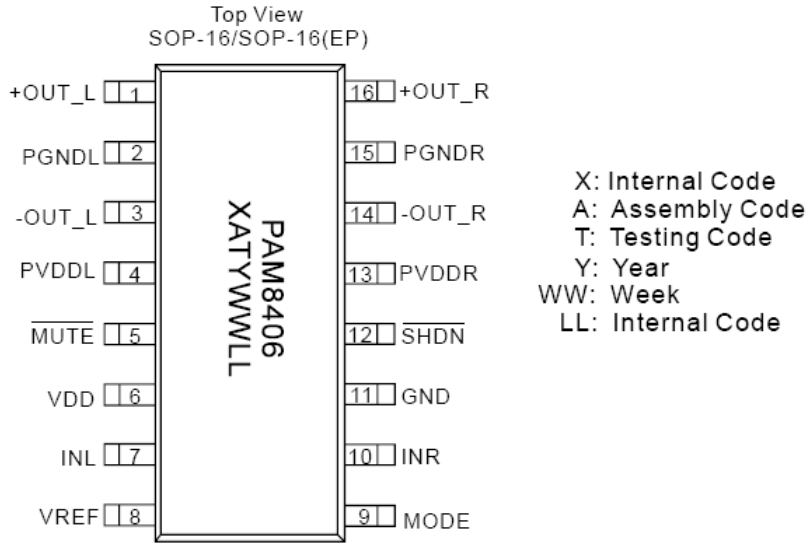

© Diodes Incorporated

Package Outline Dimensions

Please see http://www.diodes.com/package-outlines.html for the latest version.

SO-16

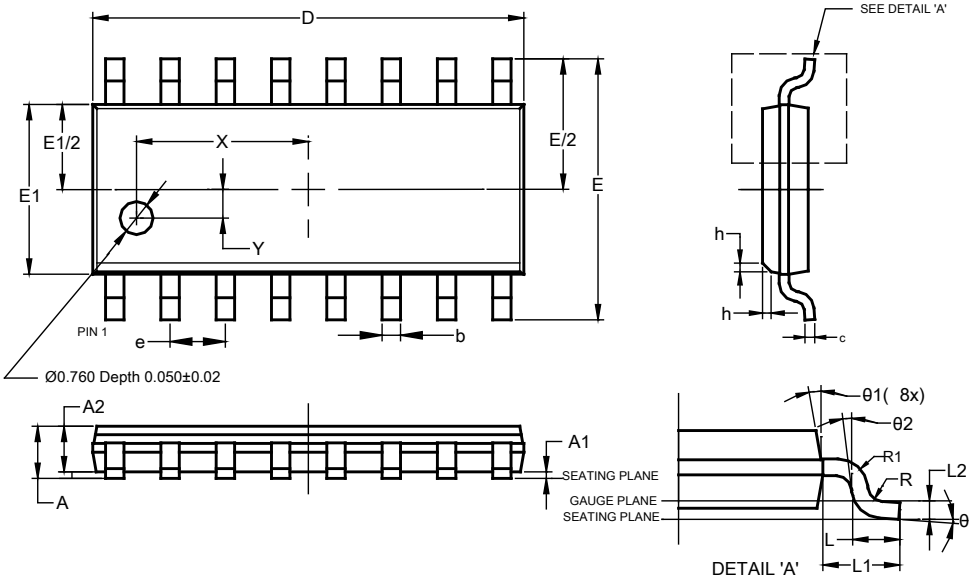

SO-16			
Dim	**Min**	**Max**	**Typ**
A	--	1.260	--
A1	0.10	0.23	--
A2	1.02	--	--
b	0.31	0.51	--
c	0.10	0.25	--
D	9.80	10.00	--
E	5.90	6.10	--
E1	3.80	4.00	--
e	1.27 BSC		
h	0.15	0.25	0.20
L	0.40	1.27	--
L1	1.04 REF		
L2	0.25 BSC		
R	0.07	--	--
R1	0.07	--	--
X	3.945 REF		
Y	0.661 REF		
θ	0°	8°	--
θ1	5°	15°	--
θ2	0°	--	--
All Dimensions in mm			

Suggested Pad Layout

Please see http://www.diodes.com/package-outlines.html for the latest version.

SO-16

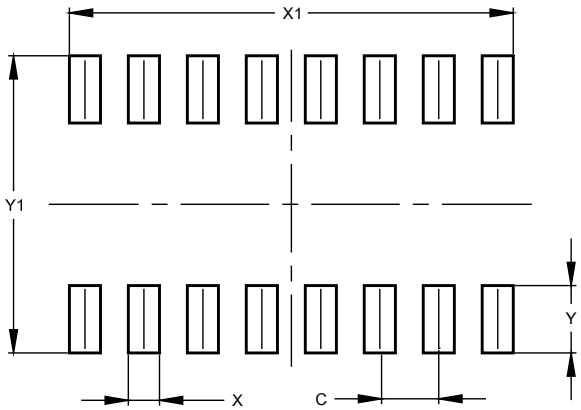

Dimensions	Value (in mm)
C	1.270
X	0.670
X1	9.560
Y	1.450
Y1	6.400

© Diodes Incorporated

IMPORTANT NOTICE

1. DIODES INCORPORATED AND ITS SUBSIDIARIES ("DIODES") MAKE NO WARRANTY OF ANY KIND, EXPRESS OR IMPLIED, WITH REGARDS TO ANY INFORMATION CONTAINED IN THIS DOCUMENT, INCLUDING, BUT NOT LIMITED TO, THE IMPLIED WARRANTIES OF MERCHANTABILITY, FITNESS FOR A PARTICULAR PURPOSE OR NON-INFRINGEMENT OF THIRD PARTY INTELLECTUAL PROPERTY RIGHTS (AND THEIR EQUIVALENTS UNDER THE LAWS OF ANY JURISDICTION).

2. The Information contained herein is for informational purpose only and is provided only to illustrate the operation of Diodes products described herein and application examples. Diodes does not assume any liability arising out of the application or use of this document or any product described herein. This document is intended for skilled and technically trained engineering customers and users who design with Diodes products. Diodes products may be used to facilitate safety-related applications; however, in all instances customers and users are responsible for (a) selecting the appropriate Diodes products for their applications, (b) evaluating the suitability of the Diodes products for their intended applications, (c) ensuring their applications, which incorporate Diodes products, comply the applicable legal and regulatory requirements as well as safety and functional-safety related standards, and (d) ensuring they design with appropriate safeguards (including testing, validation, quality control techniques, redundancy, malfunction prevention, and appropriate treatment for aging degradation) to minimize the risks associated with their applications.

3. Diodes assumes no liability for any application-related information, support, assistance or feedback that may be provided by Diodes from time to time. Any customer or user of this document or products described herein will assume all risks and liabilities associated with such use, and will hold Diodes and all companies whose products are represented herein or on Diodes' websites, harmless against all damages and liabilities.

4. Products described herein may be covered by one or more United States, international or foreign patents and pending patent applications. Product names and markings noted herein may also be covered by one or more United States, international or foreign trademarks and trademark applications. Diodes does not convey any license under any of its intellectual property rights or the rights of any third parties (including third parties whose products and services may be described in this document or on Diodes' website) under this document.

5. Diodes products are provided subject to Diodes' Standard Terms and Conditions of Sale (https://www.diodes.com/about/company/terms-and-conditions/terms-and-conditions-of-sales/) or other applicable terms. This document does not alter or expand the applicable warranties provided by Diodes. Diodes does not warrant or accept any liability whatsoever in respect of any products purchased through unauthorized sales channel.

6. Diodes products and technology may not be used for or incorporated into any products or systems whose manufacture, use or sale is prohibited under any applicable laws and regulations. Should customers or users use Diodes products in contravention of any applicable laws or regulations, or for any unintended or unauthorized application, customers and users will (a) be solely responsible for any damages, losses or penalties arising in connection therewith or as a result thereof, and (b) indemnify and hold Diodes and its representatives and agents harmless against any and all claims, damages, expenses, and attorney fees arising out of, directly or indirectly, any claim relating to any noncompliance with the applicable laws and regulations, as well as any unintended or unauthorized application.

7. While efforts have been made to ensure the information contained in this document is accurate, complete and current, it may contain technical inaccuracies, omissions and typographical errors. Diodes does not warrant that information contained in this document is error-free and Diodes is under no obligation to update or otherwise correct this information. Notwithstanding the foregoing, Diodes reserves the right to make modifications, enhancements, improvements, corrections or other changes without further notice to this document and any product described herein. This document is written in English but may be translated into multiple languages for reference. Only the English version of this document is the final and determinative format released by Diodes.

8. Any unauthorized copying, modification, distribution, transmission, display or other use of this document (or any portion hereof) is prohibited. Diodes assumes no responsibility for any losses incurred by the customers or users or any third parties arising from any such unauthorized use.

Copyright © 2021 Diodes Incorporated

www.diodes.com

Looking for pricing, stock, or lifecycle information?

Click below to explore more details on WIN SOURCE:

- View PAM8406DR on WIN SOURCE
- Diodes Incorporated Information

Optimize Your Supply Chain with WIN SOURCE Solutions

- Global Sourcing Solution
- Obsolete Management
- Cost Control Management
- Shortage Management
- Alternative Solution
- Excess Inventory Management