THE DATASHEET OF

OVSRRGBCC3TM

www.win-source.net 0086-755-83957316

Full-Color 1204 SMD (150° Viewing Angle)

OVSRRGBCC3 / OVSRRGBCC3TM

Features:

- Full-color RGB
- Top-view or side-view mounting options
- Compatible with automatic placement equipment
- Compatible with infrared and vapor phase reflow solder process

Description:

The OVSRRGBCC3 & OVSRRGBCC3TM is a compact full-color (RGB) in a miniature surface mount package with a 150° viewing angle. This 1204 package provides the option to mount it as a top-emitting or side-emitting (right angle) device. The device can be used on smaller boards with a higher packing density and is ideal for handheld applications.

Applications:

- Automotive backlighting for dashboard and switches
- Telecommunications (backlighting for telephones and faxes)

Part Number	Material	Emitted Color	Intensity Typ. mcd	Lens Color
OVSRRGBCC3 OVSRRGBCC3TM	AlInGaP	Red	105	White Diffused
	InGaN	Green	330	
	InGaN	Blue	200	

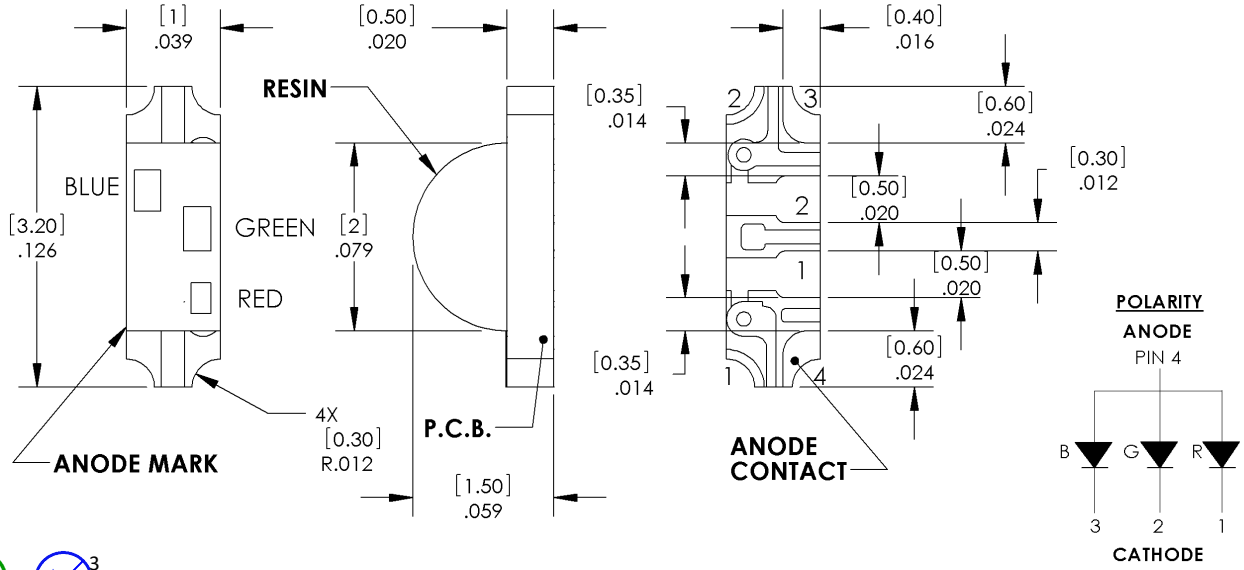

RoHS

Moisture 3

ATTENTION
OBSERVE PRECAUTIONS
ELECTROSTATIC
SENSITIVE DEVICES

Note: Maximum burr from saw singulation to be < 50 um from metallization surface.

DO NOT LOOK DIRECTLY AT LED WITH UNSHIELDED EYES OR DAMAGE TO RETINA MAY OCCUR.

General Note
TT Electronics reserves the right to make changes in product specification without notice or liability. All information is subject to TT Electronics' own data and is considered accurate at time of going to print.

© TT electronics plc

TT Electronics | OPTEK Technology
2900 E. Plano Pkwy, Plano, TX 75074 | Ph: +1 972 323 2200
www.ttelectronics.com | sensors@ttelectronics.com

Electrical Specifications

Absolute Maximum Ratings (T_A = 25° C unless otherwise noted)

PARAMETER	RED	GREEN / BLUE	UNIT
Continuous Forward Current	30	20	mA
Peak Forward Current (10% Duty Cycle, 10 ms pulse width)	100	80	mA
Power Dissipation	72	72	mW
Reverse Voltage	5	5	V
Operating Temperature Range	-40 to +85	-40 to +85	°C
Storage Temperature Range	-55 to +100	-55 to +100	°C
Soldering Temperature (for 10 seconds)	260	260	°C
Electrostatic Discharge Classification (HBM)	±2000	±2000	V
Moisture Sensitivity Level (IPC/JEDEC J-STD-020C)	3	3	168 hours

General Note
TT Electronics reserves the right to make changes in product specification without notice or liability. All information is subject to TT Electronics' own data and is considered accurate at time of going to print.

© TT electronics plc

TT Electronics | OPTEK Technology
2900 E. Plano Pkwy, Plano, TX 75074 | Ph: +1 972 323 2200
www.ttelectronics.com | sensors@ttelectronics.com

Electrical Specifications

Electrical Characteristics (T_A = 25°C unless otherwise noted)

SYMBOL	PARAMETER	COLOR	MIN	TYP	MAX	UNITS	CONDITIONS
I_V	Luminous Intensity (axial direction)	Red	60	105	150	mcd	I_F = 20 mA
		Green	210	330	450		
		Blue	150	200	250		
2 Θ½	Viewing Angle	Red	140	150	160	deg	I_F = 20 mA
		Green					
		Blue					
λ_D	Dominant Wavelength	Red	615	625	635	nm	I_F = 20 mA
		Green	520	530	535		
		Blue	465	475	485		
V_F	Forward Voltage	Red	1.8	2.0	2.4	V	I_F = 20 mA
		Green	3.0	3.3	3.6		
		Blue	3.0	3.3	3.6		
I_R	Reverse Current	Red	----	----	50	µA	V_R = 5 V
		Green	----	----			
		Blue	----	----			

Spatial Distribution

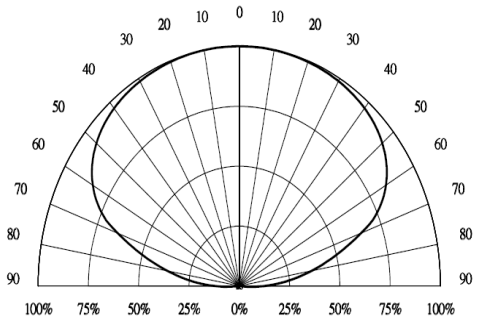

© TT electronics plc

Typical Electro-Optical Characteristics Curves (T_A = 25° C unless otherwise noted)

Luminous Intensity vs. Ambient Temperature

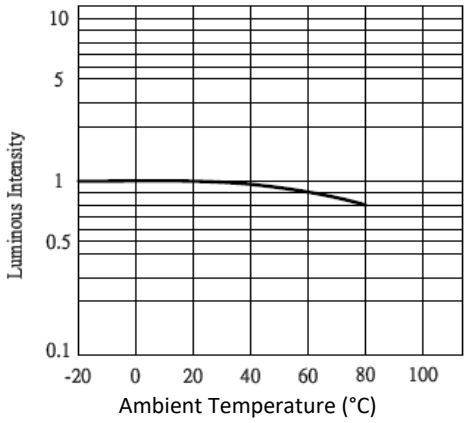

Relative Intensity vs. Forward Current

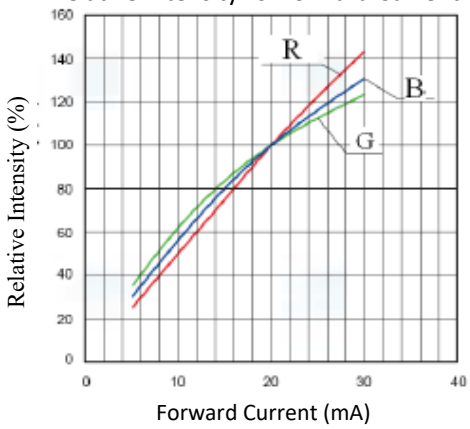

Forward Current vs. Ambient Temperature

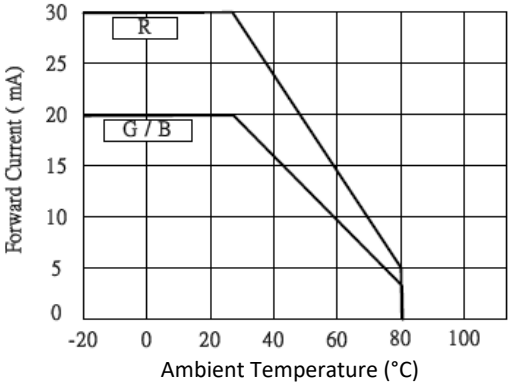

Forward Current vs. Forward Voltage

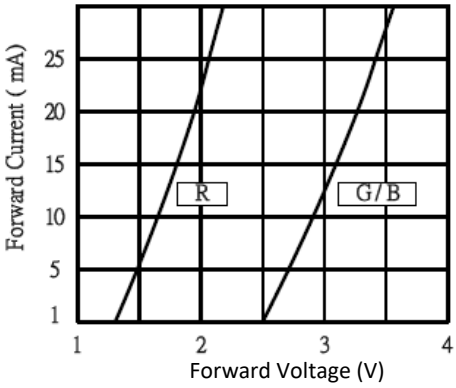

Relative Intensity vs. Wavelength

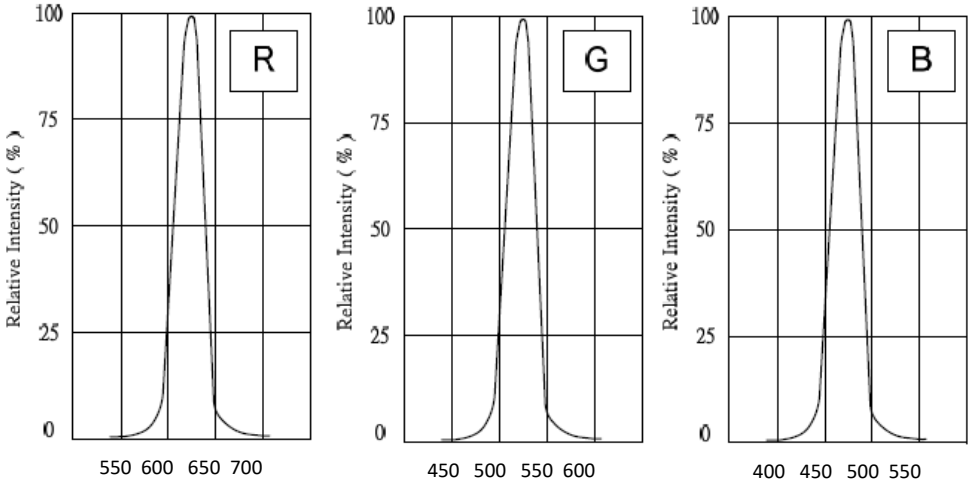

General Note
TT Electronics reserves the right to make changes in product specification without notice or liability. All information is subject to TT Electronics' own data and is considered accurate at time of going to print.

TT Electronics | OPTEK Technology
2900 E. Plano Pkwy, Plano, TX 75074 | Ph: +1 972 323 2200
www.ttelectronics.com | sensors@ttelectronics.com

© TT electronics plc

Recommended Solder Patterns

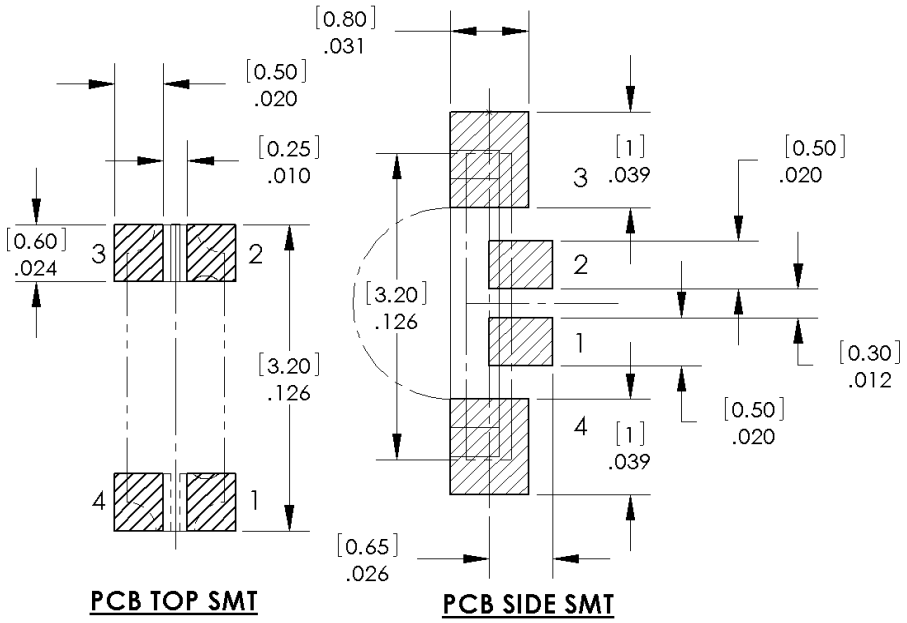

Recommended Pb Free IR-Reflow Solder Profile

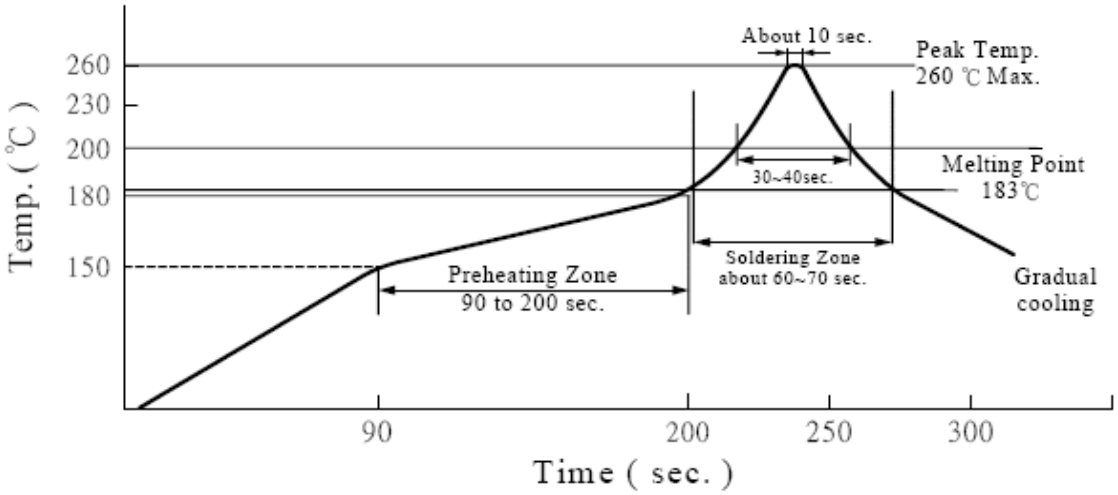

Notes:

1. Exceeding the recommended temperatures and accelerating the heating and cooling processes may cause electrical and/or optical failure.
2. Solder dipping method is not recommended. Optek cannot guarantee the LEDs after assembly using the solder dipping method.

General Note
TT Electronics reserves the right to make changes in product specification without notice or liability. All information is subject to TT Electronics' own data and is considered accurate at time of going to print.

TT Electronics | OPTEK Technology
2900 E. Plano Pkwy, Plano, TX 75074 | Ph: +1 972 323 2200
www.ttelectronics.com | sensors@ttelectronics.com

© TT electronics plc

Reliability Test Items and Conditions

No	Item	Test Condition	Test Hours/Cycles	Sample No.	Ac / Re
1	DC Operating Life	R~I_F: 30mA, G/B~I_F: 20 mA	1,000 Hours	50 pcs	0 / 1
2	High Temperature Storage	Temp: 100° C	1,000 Hours	50 pcs	0 / 1
3	Low Temperature Storage	Temp: -55° C	1,000 Hours	50 pcs	0 / 1
4	Thermal Shock Test	-40° C 5min 8secs 80° C 5min	100 Cycles	50 pcs	0 / 1
5	Temperature Cycle	-40° C ~ 25° C ~ 100° C ~ 25° C 30min ~ 5min ~ 30min ~ 5min	300 Cycles	50 pcs	0 / 1
6	Temp. & Humidity Bias	T_A = 85° C, RH = 85%, I_F = 5 mA*	1,000 Hours	50 pcs	0 / 1

● Reliability Criteria

Item	Symbol	Test Conditions	Limit	
			Min.	Max.
Forward Voltage	V_F	I_F: 20 mA		U.S.L. *1.2
Reverse Current	I_R	V_R: 5 V		U.S.L. *2
Power	P_O	I_F: 20 mA	L.S.L. *0.5	

*U.S.L.: Upper Standard Level *L.S.L.: Lower Standard Level

Precautions:

Cleaning

- Optek recommends isopropyl alcohol be used as a solvent for cleaning the LEDs. When using other solvents, it should be confirmed beforehand whether the solvents will dissolve the package and/or the resin. Freon solvents should not be used to clean LEDs because of worldwide regulations.
- Do not use ultrasonic methods.

Safety

- LED light output is strong enough to cause injury to the human eye. Precaution must be taken to avoid looking directly into the LEDs with unprotected eyes for more than a few seconds.
- Flashing lights have been known to cause discomfort in people. This can be prevented by taking precautions during operation.

General Note
TT Electronics reserves the right to make changes in product specification without notice or liability. All information is subject to TT Electronics' own data and is considered accurate at time of going to print.

© TT electronics plc

Carrier Tape Dimensions OVSRRGBCC3: Loaded quantity 2000 pieces per reel

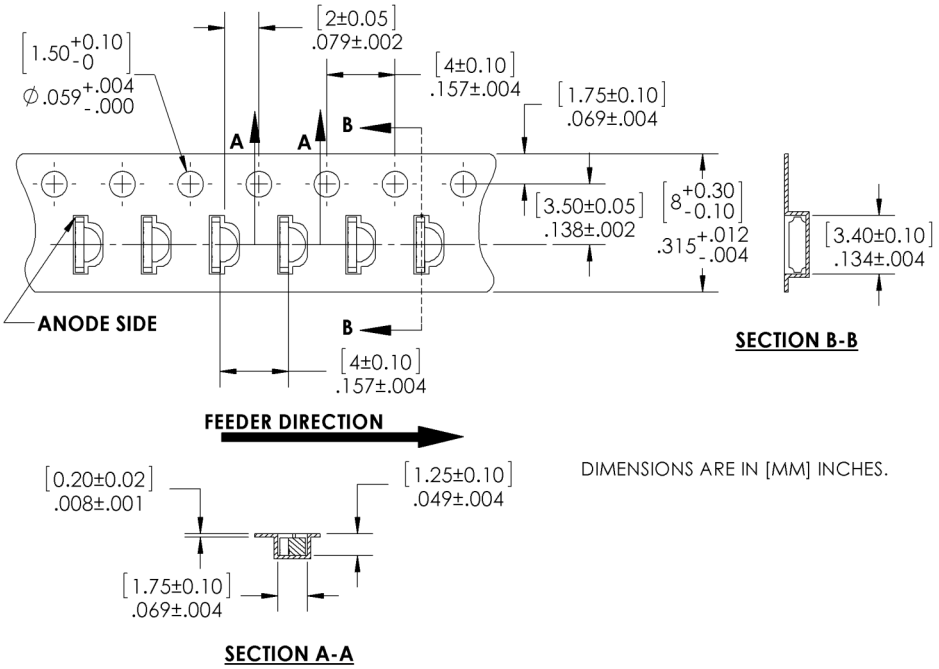

Carrier Tape Dimensions OVSRRGBCC3TM: Loaded quantity 1,500 pieces per reel

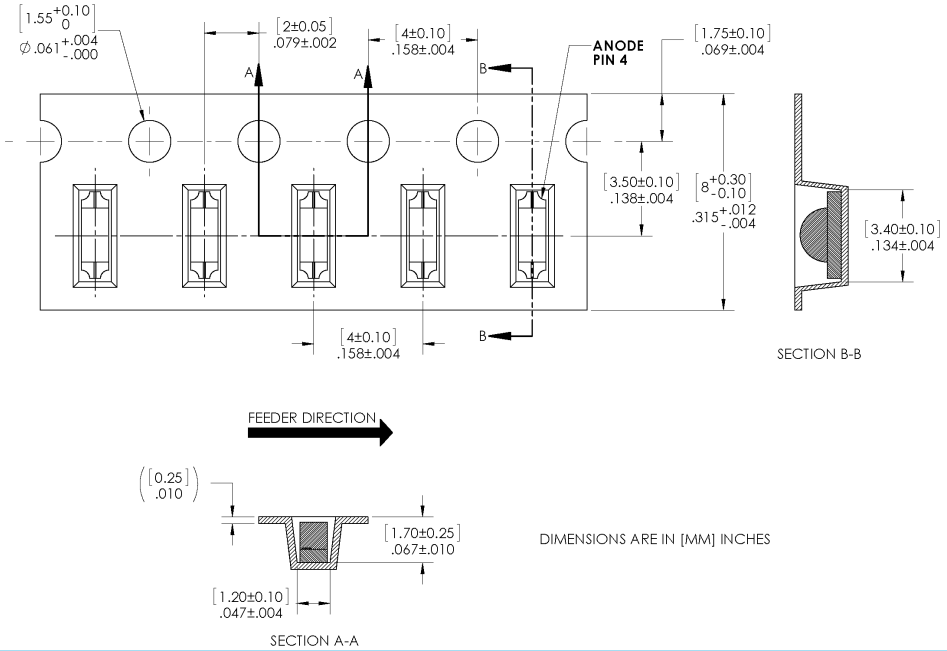

General Note
TT Electronics reserves the right to make changes in product specification without notice or liability. All information is subject to TT Electronics' own data and is considered accurate at time of going to print.

TT Electronics | OPTEK Technology
2900 E. Plano Pkwy, Plano, TX 75074 | Ph: +1 972 323 2200
www.ttelectronics.com | sensors@ttelectronics.com

© TT electronics plc

Reel Dimensions: 7-inch reel

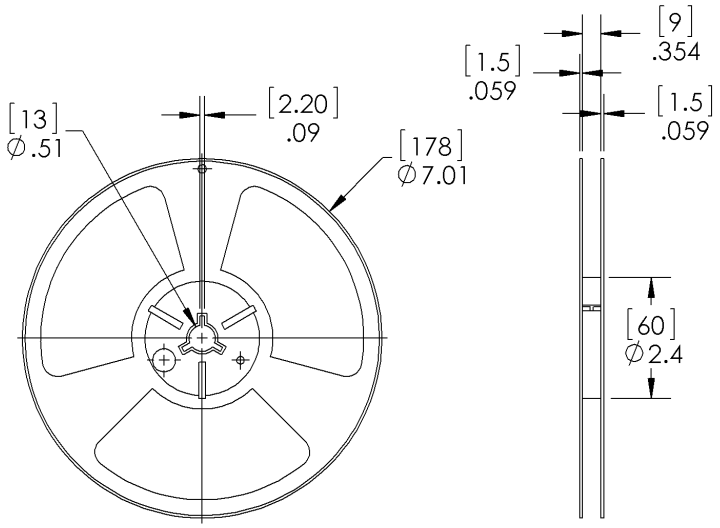

Moisture Resistant Packaging

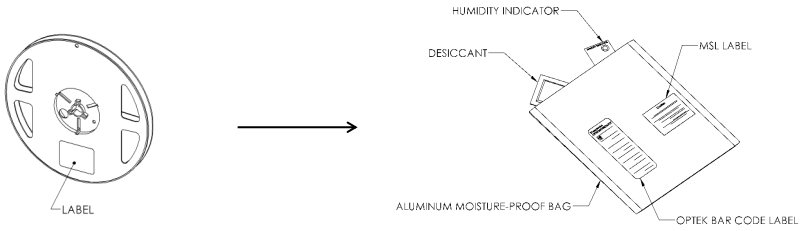

General Note
TT Electronics reserves the right to make changes in product specification without notice or liability. All information is subject to TT Electronics' own data and is considered accurate at time of going to print.

TT Electronics | OPTEK Technology
2900 E. Plano Pkwy, Plano, TX 75074 | Ph: +1 972 323 2200
www.ttelectronics.com | sensors@ttelectronics.com

© TT electronics plc

Looking for pricing, stock, or lifecycle information?

Click below to explore more details on WIN SOURCE:

- View OVSRRGBCC3TM on WIN SOURCE
- TT Electronics Information

Optimize Your Supply Chain with WIN SOURCE Solutions

- Global Sourcing Solution
- Obsolete Management
- Cost Control Management
- Shortage Management
- Alternative Solution
- Excess Inventory Management