DATA SHEET

74F573
Octal transparent latch (3-State)
74F574
Octal transparent latch (3-State)

Product specification

1989 Oct 16

IC15 Data Handbook

Philips
Semiconductors

PHILIPS

74F573 Octal Transparent Latch (3-State)
74F574 Octal D Flip-Flop (3-State)

FEATURES

- 74F573 is broadside pinout version of 74F373
- 74F574 is broadside pinout version of 74F374
- Inputs and Outputs on opposite side of package allow easy interface to Microprocessors
- Useful as an Input or Output port for Microprocessors
- 3-State Outputs for Bus interfacing
- Common Output Enable
- 74F563 and 74F564 are inverting version of 74F573 and 74F574 respectively
- 3-State Outputs glitch free during power-up and power-down
- These are High-Speed replacements for N8TS805 and N8TS806

DESCRIPTION

The 74F573 is an octal transparent latch coupled to eight 3-State output buffers. The two sections of the device are controlled independently by Enable (E) and Output Enable ($\overline{OE}$) control gates.

The 74F573 is functionally identical to the 74F373 but has a broadside pinout configuration to facilitate PC board layout and allow easy interface with microprocessors.

The data on the D inputs is transferred to the latch outputs when the Enable (E) input is High. The latch remains transparent to the data input while E is High and stores the data that is present one setup time before the High-to-Low enable transition.

The 3-State output buffers are designed to drive heavily loaded 3-State buses, MOS memories, or MOS microprocessors. The active Low Output Enable ($\overline{OE}$) controls all eight 3-State buffers independent to the latch operation. When $\overline{OE}$ is Low, the latched or transparent data appears at the outputs. When $\overline{OE}$ is High, the outputs are in high impedance “off” state, which means they will neither drive nor load the bus.

The 74F574 is functionally identical to the 74F374 but has a broadside pinout configuration to facilitate PC board layout and allow easy interface with microprocesors.

It is an 8-bit, edge triggered register coupled to eight 3-State output buffers. The two sections of the device are controlled independently by the clock (CP) and Output Enable ($\overline{OE}$) control gates.

The register is fully edge-triggered. The state of each D input, one setup time before the Low-to-High clock transition is transferred to the corresponding flip-flop’s Q output.

The 3-State output buffers are designed to drive heavily loaded 3-State buses, MOS memories, or MOS microprocessors. The active Low Output Enable ($\overline{OE}$) controls all eight 3-State buffers independently of the latch operation. When $\overline{OE}$ is Low, the latched or transparent data appears at the outputs. When $\overline{OE}$ is High, the outputs are in high impedance “off” state, which means they will neither drive nor load the bus.

TYPE	TYPICAL PROPAGATION DELAY	TYPICAL SUPPLY CURRENT (TOTAL)
74F573	5.0ns	35mA

TYPE	TYPICAL f_{MAX}	TYPICAL SUPPLY CURRENT (TOTAL)
74F574	180MHz	50mA

ORDERING INFORMATION

DESCRIPTION	COMMERCIAL RANGE V_{CC} = 5V ±10%, T_{amb} = 0°C to +70°C	PKG DWG #
20-Pin Plastic DIP	N74F573N, N74F574N	SOT146-1
20-Pin Plastic SOL	N74F573D, N74F574D	SOT163-1
20-Pin Plastic SSOP	N74F573DB	SOT339-1

INPUT AND OUTPUT LOADING AND FAN-OUT TABLE

PINS	DESCRIPTION	74F (U.L.) HIGH/LOW	LOAD VALUE HIGH/LOW
D0 - D7	Data inputs	1.0/1.0	20µA/0.6mA
E (74F573)	Latch Enable input (active falling edge)	1.0/1.0	20µA/0.6mA
$\overline{OE}$	Output Enable input (active Low)	1.0/1.0	20µA/0.6mA
CP (74F574)	Clock Pulse input (active rising edge)	1.0/1.0	20µA/0.6mA
Q0 - Q7	3-State outputs	150/40	3.0mA/24mA

NOTE: One (1.0) FAST Unit Load is defined as: 20µA in the High state and 0.6mA in the Low state.

PIN CONFIGURATION – 74F573

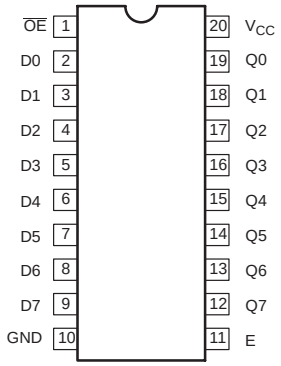

SF01073

PIN CONFIGURATION – 74F574

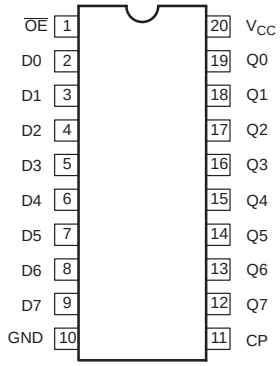

SF01074

LOGIC SYMBOL – 74F573

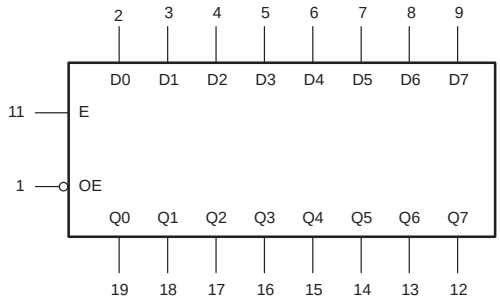

V_{CC}=Pin 20
GND=Pin 10

SF01075

LOGIC SYMBOL – 74F574

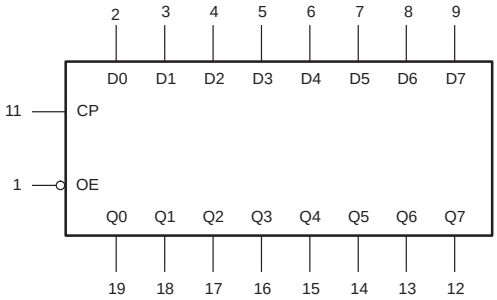

V_{CC}=Pin 20
GND=Pin 10

SF01076

LOGIC SYMBOL (IEEE/IEC) – 74F573

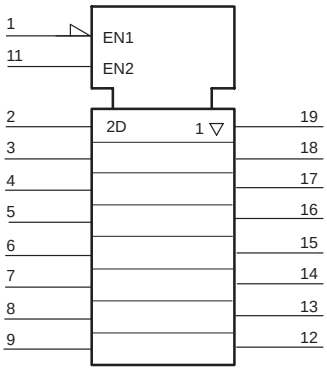

SF01077

LOGIC SYMBOL (IEEE/IEC) – 74F574

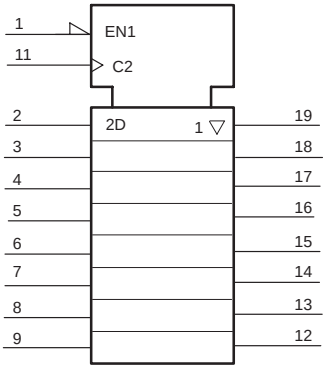

SF01078

LOGIC DIAGRAM – 74F573

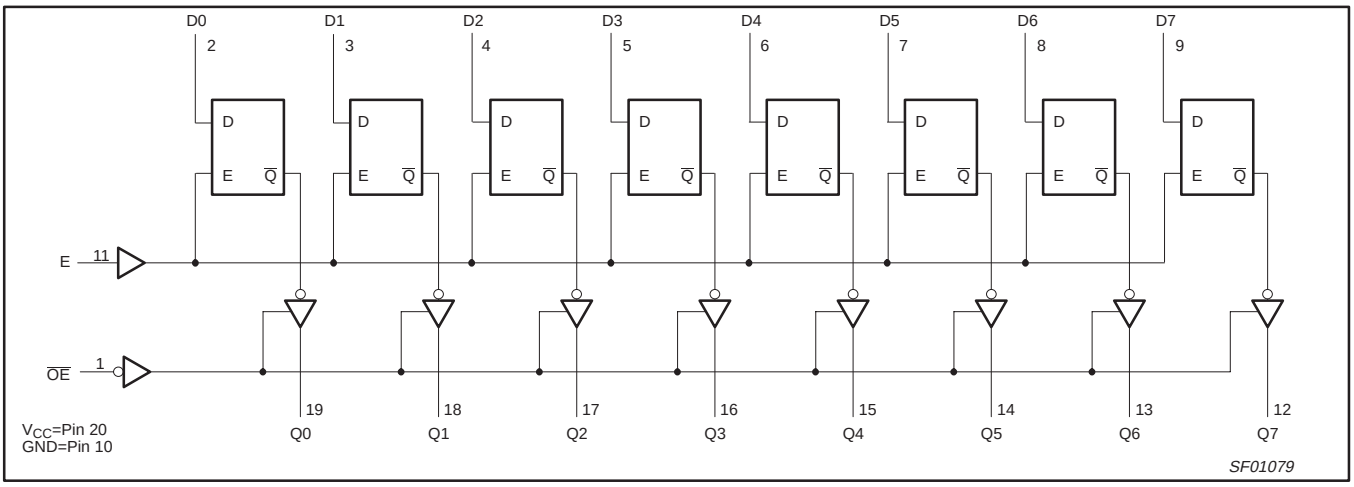

FUNCTION TABLE – 74F573

INPUTS			INTERNAL REGISTER	OUTPUTS	OPERATING MODES
$\overline{OE}$	E	Dn		Q0 – Q7	
L	H	L	L	L	Load and read register
L	H	H	H	H	
L	↓	l	L	L	Latch and read register
L	↓	h	H	H	
L	L	X	NC	NC	Hold
H	L	X	NC	Z	Disable outputs
H	H	Dn	Dn	Z	

H = High voltage level
h = High voltage level one setup time prior to the High-to-Low E transition
L = Low voltage level
l = Low voltage level one setup time prior to the High-to-Low E transition
NC= No change
X = Don’t care
Z = High impedance “off” state
↓ = High-to-Low E transition

LOGIC DIAGRAM – 74F574

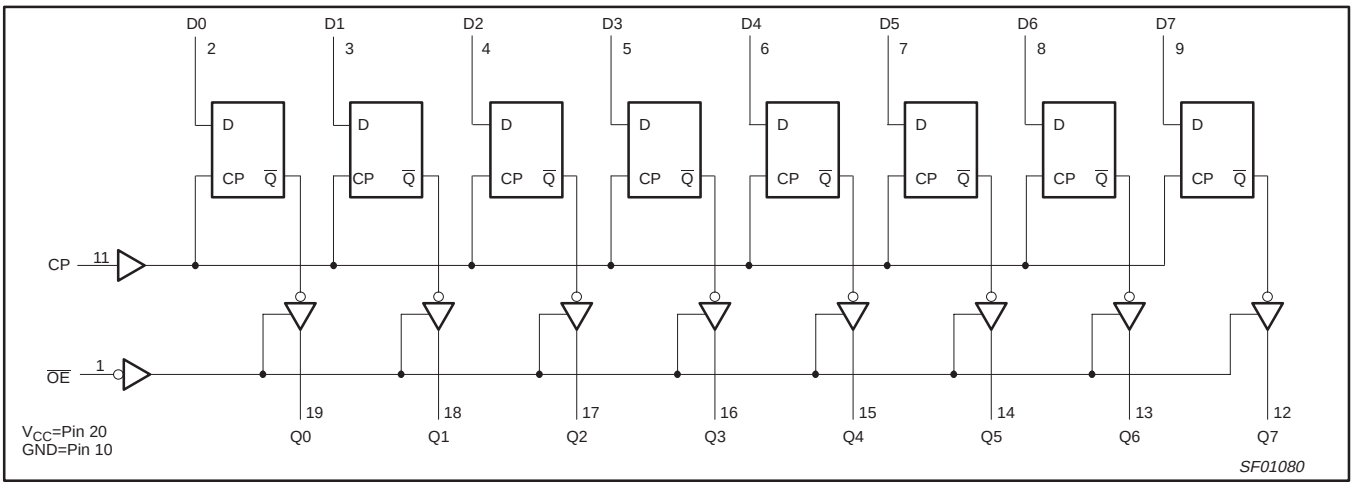

FUNCTION TABLE – 74F574

INPUTS			INTERNAL REGISTER	OUTPUTS	OPERATING MODES
$\overline{OE}$	CP	Dn		Q0 – Q7	
L	↑	l	L	L	Load and read register
L	↑	h	H	H	
L	↑̸	X	NC	NC	Hold
H	↑	Dn	Dn	Z	Disable outputs

H = High voltage level
h = High voltage level one setup time prior to the Low-to-High clock transition
L = Low voltage level
l = Low voltage level one setup time prior to the Low-to-High clock transition
NC= No change
X = Don't care
Z = High impedance "off" state
↑ = Low-to-High clock transition
↑̸ = Not a Low-to-High clock transition

ABSOLUTE MAXIMUM RATINGS

(Operation beyond the limits set forth in this table may impair the useful life of the device.
Unless otherwise noted these limits are over the operating free-air temperature range.)

SYMBOL	PARAMETER	RATING	UNIT
V_{CC}	Supply voltage	–0.5 to +7.0	V
V_{IN}	Input voltage	–0.5 to +7.0	V
I_{IN}	Input current	–30 to +5.0	mA
V_{OUT}	Voltage applied to output in High output state	–0.5 to $+V_{CC}$	V
I_{OUT}	Current applied to output in Low output state	48	mA
T_{amb}	Operating free-air temperature range	0 to +70	°C
T_{stg}	Storage temperature	–65 to +150	°C

RECOMMENDED OPERATING CONDITIONS

SYMBOL	PARAMETER	LIMITS			UNIT
		MIN	NOM	MAX	
V_{CC}	Supply voltage	4.5	5.0	5.5	V
V_{IH}	High-level input voltage	2.0			V
V_{IL}	Low-level input voltage			0.8	V
I_{IK}	Input clamp current			–18	mA
I_{OH}	High-level output current			–3	mA
I_{OL}	Low-level output current			24	mA
T_{amb}	Operating free-air temperature range	0		70	°C

DC ELECTRICAL CHARACTERISTICS

(Over recommended operating free-air temperature range unless otherwise noted.)

SYMBOL	PARAMETER			TEST CONDITIONS[NO TAG]		LIMITS MIN	LIMITS TYP NO TAG	LIMITS MAX	UNIT
V_{OH}	High-level output voltage			V_{CC} = MIN, V_{IL} = MAX, V_{IH} = MIN, I_{OH} = MAX	±10%V_{CC}	2.4			V
					±5%V_{CC}	2.7	3.4		V
V_{OL}	Low-level output voltage			V_{CC} = MIN, V_{IL} = MAX, V_{IH} = MIN, I_{OL} = MAX	±10%V_{CC}		0.35	0.50	V
					±5%V_{CC}		0.35	0.50	V
V_{IK}	Input clamp voltage			V_{CC} = MIN, I_I = I_{IK}			–0.73	–1.2	V
I_I	Input current at maximum input voltage			V_{CC} = MAX, V_I = 7.0V				100	µA
I_{IH}	High-level input current			V_{CC} = MAX, V_I = 2.7V				20	µA
I_{IL}	Low-level input current			V_{CC} = MAX, V_I = 0.5V				–0.6	mA
I_{OZH}	Off-state output current, High-level voltage applied			V_{CC} = MAX, V_O = 2.7V				50	µA
I_{OZL}	Off-state output current, Low-level voltage applied			V_{CC} = MAX, V_O = 0.5V				–50	µA
I_{OS}	Short-circuit output current[NO TAG]			V_{CC} = MAX		–60		–150	mA
I_{CC}	Supply current (total)	I_{CCH}	74F573	V_{CC} = MAX			30	40	mA
		I_{CCL}					35	50	mA
		I_{CCZ}					40	60	mA
		I_{CCH}	74F574	V_{CC} = MAX			45	65	mA
		I_{CCL}					50	70	mA
		I_{CCZ}					55	85	mA

NOTES:

1. For conditions shown as MIN or MAX, use the appropriate value specified under recommended operating conditions for the applicable type.
2. All typical values are at V_{CC} = 5V, T_{amb} = 25°C.
3. Not more than one output should be shorted at a time. For testing I_{OS}, the use of high-speed test apparatus and/or sample-and-hold techniques are preferable in order to minimize internal heating and more accurately reflect operational values. Otherwise, prolonged shorting of a High output may raise the chip temperature well above normal and thereby cause invalid readings in other parameter tests. In any sequence of parameter tests, I_{OS} tests should be performed last.

AC ELECTRICAL CHARACTERISTICS

SYMBOL	PARAMETER		TEST CONDITIONS	LIMITS					UNIT
				T_{amb}= +25°C, V_{CC} = +5V, C_L = 50pF, R_L = 500Ω			T_{amb} = 0°C to +70°C, V_{CC} = +5V ± 10%, C_L = 50pF, R_L = 500Ω		
				MIN	TYP	MAX	MIN	MAX	
t_{PLH} t_{PHL}	Propagation delay Dn to Qn	74F573	Waveform NO TAG	3.0 1.0	5.5 3.5	8.0 6.0	2.5 1.0	9.0 7.0	ns
t_{PLH} t_{PHL}	Propagation delay E to Qn		Waveform NO TAG	4.5 3.0	8.5 5.0	11.5 7.0	4.0 2.5	12.5 8.0	ns
t_{PZH} t_{PZL}	Output Enable time to High or Low level		Waveform NO TAG Waveform NO TAG	2.5 2.5	5.5 5.5	9.5 8.0	2.0 2.0	10.5 8.5	ns
t_{PHZ} t_{PLZ}	Output Disable time from High or Low level		Waveform NO TAG Waveform NO TAG	1.0 1.0	3.0 2.5	6.0 5.5	1.0 1.0	6.5 5.5	ns
f_{MAX}	Maximum Clock frequency	74F574	Waveform NO TAG	160	180		150		MHz
t_{PLH} t_{PHL}	Propagation delay CP to Qn		Waveform NO TAG	3.5 3.5	5.0 5.0	7.5 7.5	3.0 3.0	8.0 8.0	ns
t_{PZH} t_{PZL}	Output Enable time to High or Low level		Waveform NO TAG Waveform NO TAG	2.5 3.0	4.5 5.0	7.5 8.0	2.0 3.0	7.5 8.5	ns
t_{PHZ} t_{PLZ}	Output Disable time from High or Low level		Waveform NO TAG Waveform NO TAG	1.0 1.0	3.0 2.5	5.5 5.5	1.0 1.0	6.0 6.0	ns

AC SETUP REQUIREMENTS

SYMBOL	PARAMETER		TEST CONDITIONS	LIMITS					UNIT
				T_{amb}= +25°C, V_{CC} = +5V, C_L = 50pF, R_L = 500Ω			T_{amb} = 0°C to +70°C, V_{CC} = +5.0V ± 10%, C_L = 50pF, R_L = 500Ω		
				MIN	TYP	MAX	MIN	MAX	
$t_s(H)$ $t_s(L)$	Setup time, Dn to E	74F573	Waveform 4	0.0 1.5			0.0 2.0		ns
$t_h(H)$ $t_h(L)$	Hold time, Dn to E		Waveform 4	2.5 4.0			2.5 4.0		ns
$t_w(H)$	E pulse width, High		Waveform NO TAG	3.0			3.5		ns
$t_s(H)$ $t_s(L)$	Setup time, Dn to CP	74F574	Waveform NO TAG	2.5 2.5			3.0 3.0		ns
$t_h(H)$ $t_h(L)$	Hold time, Dn to CP		Waveform NO TAG	0 0			0 0		ns
$t_w(H)$ $t_w(L)$	CP Pulse width, High or Low		Waveform NO TAG	3.0 3.5			3.0 4.0		ns

AC WAVEFORMS

For all waveforms, V_M = 1.5V

The shaded areas indicate when the input is permitted to change for predictable output performance.

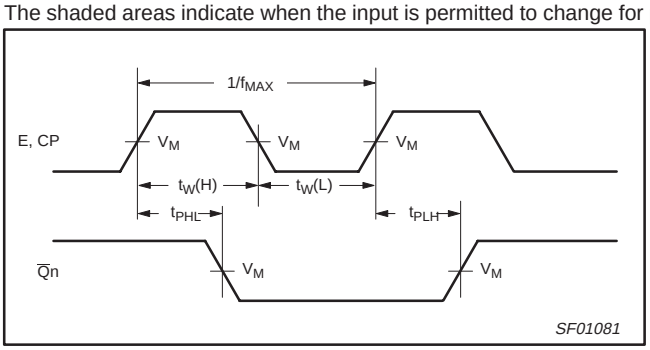

Waveform 1. Propagation Delay, Clock and Enable Inputs to Output, Enable, Clock Pulse Widths, and Maximum Clock Frequency

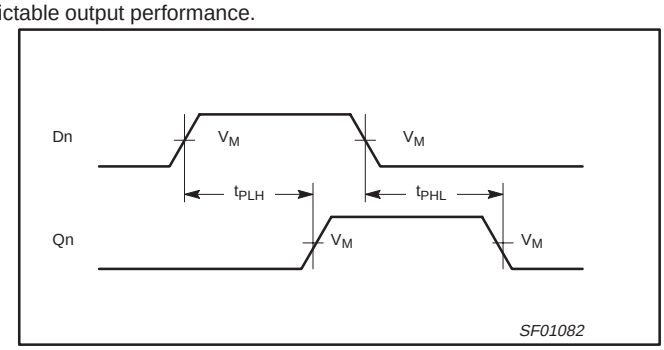

Waveform 2. Propagation Delay for Data to Outputs

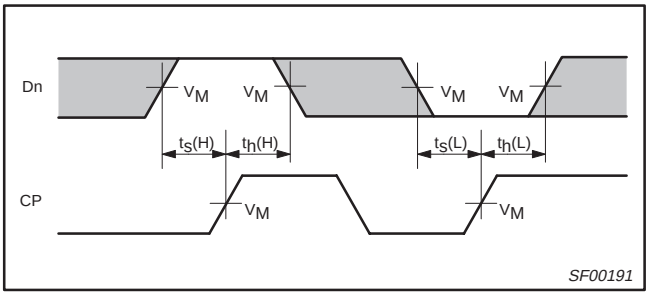

Waveform 3. Data Setup and Hold Times

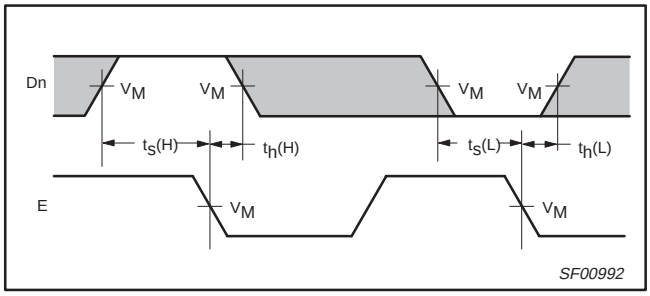

Waveform 4. Data Setup and Hold Times

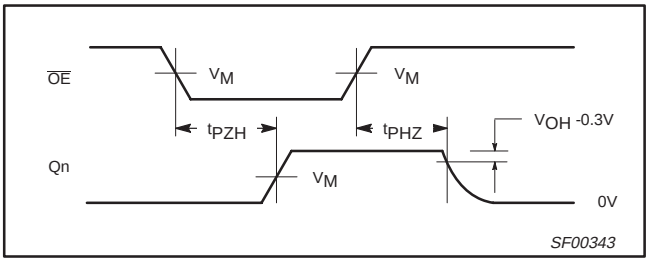

Waveform 5. 3-State Output Enable Time to High Level and Output Disable Time from High Level

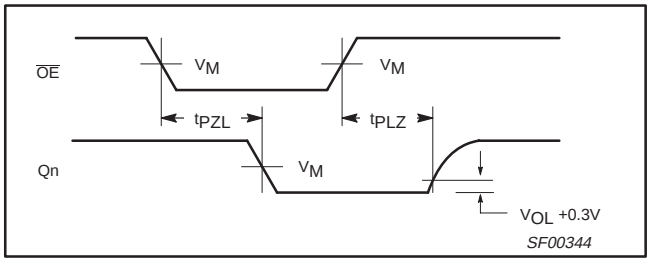

Waveform 6. 3-State Output Enable Time to Low Level and Output Disable Time from Low Level

TEST CIRCUIT AND WAVEFORM

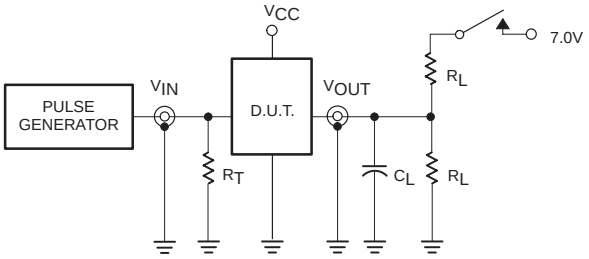

Test Circuit for 3-State Outputs

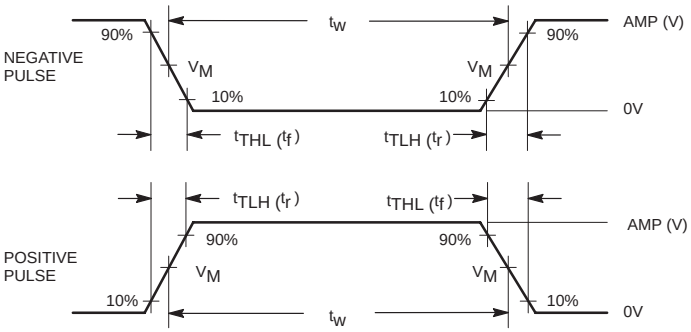

Input Pulse Definition

SWITCH POSITION

TEST	SWITCH
t_{PLZ}	closed
t_{PZL}	closed
All other	open

DEFINITIONS:

R_L = Load resistor; see AC electrical characteristics for value.

C_L = Load capacitance includes jig and probe capacitance; see AC electrical characteristics for value.

R_T = Termination resistance should be equal to Z_{OUT} of pulse generators.

family	INPUT PULSE REQUIREMENTS					
	amplitude	V_M	rep. rate	t_w	t_{TLH}	t_{THL}
74F	3.0V	1.5V	1MHz	500ns	2.5ns	2.5ns

SF00777

DIP20: plastic dual in-line package; 20 leads (300 mil) **SOT146-1**

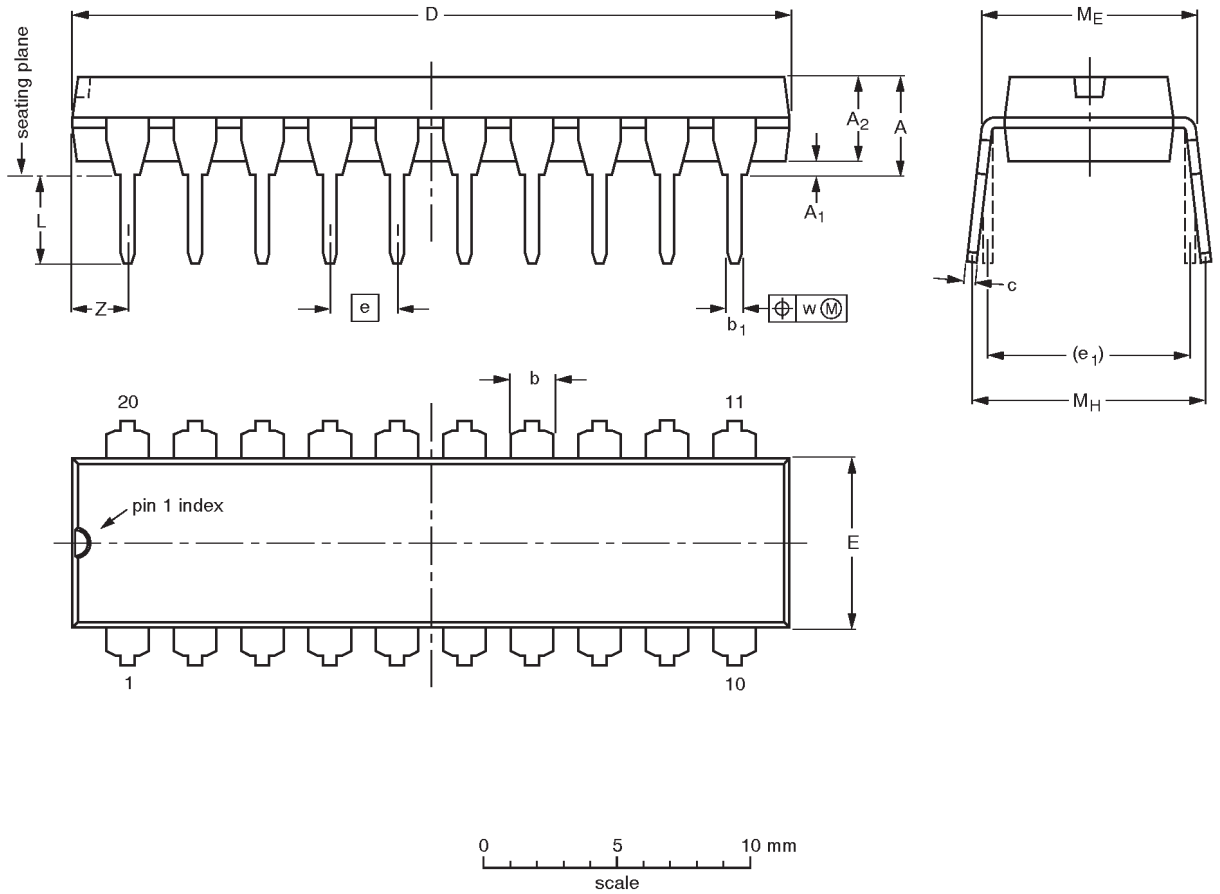

DIMENSIONS (inch dimensions are derived from the original mm dimensions)

UNIT	A max.	A_1 min.	A_2 max.	b	b_1	c	D (1)	E (1)	e	e_1	L	M_E	M_H	w	Z (1) max.
mm	4.2	0.51	3.2	1.73 1.30	0.53 0.38	0.36 0.23	26.92 26.54	6.40 6.22	2.54	7.62	3.60 3.05	8.25 7.80	10.0 8.3	0.254	2.0
inches	0.17	0.020	0.13	0.068 0.051	0.021 0.015	0.014 0.009	1.060 1.045	0.25 0.24	0.10	0.30	0.14 0.12	0.32 0.31	0.39 0.33	0.01	0.078

Note

1. Plastic or metal protrusions of 0.25 mm maximum per side are not included.

OUTLINE VERSION	REFERENCES				EUROPEAN PROJECTION	ISSUE DATE
	IEC	JEDEC	EIAJ			
SOT146-1			SC603			~~92-11-17~~ 95-05-24

SO20: plastic small outline package; 20 leads; body width 7.5 mm SOT163-1

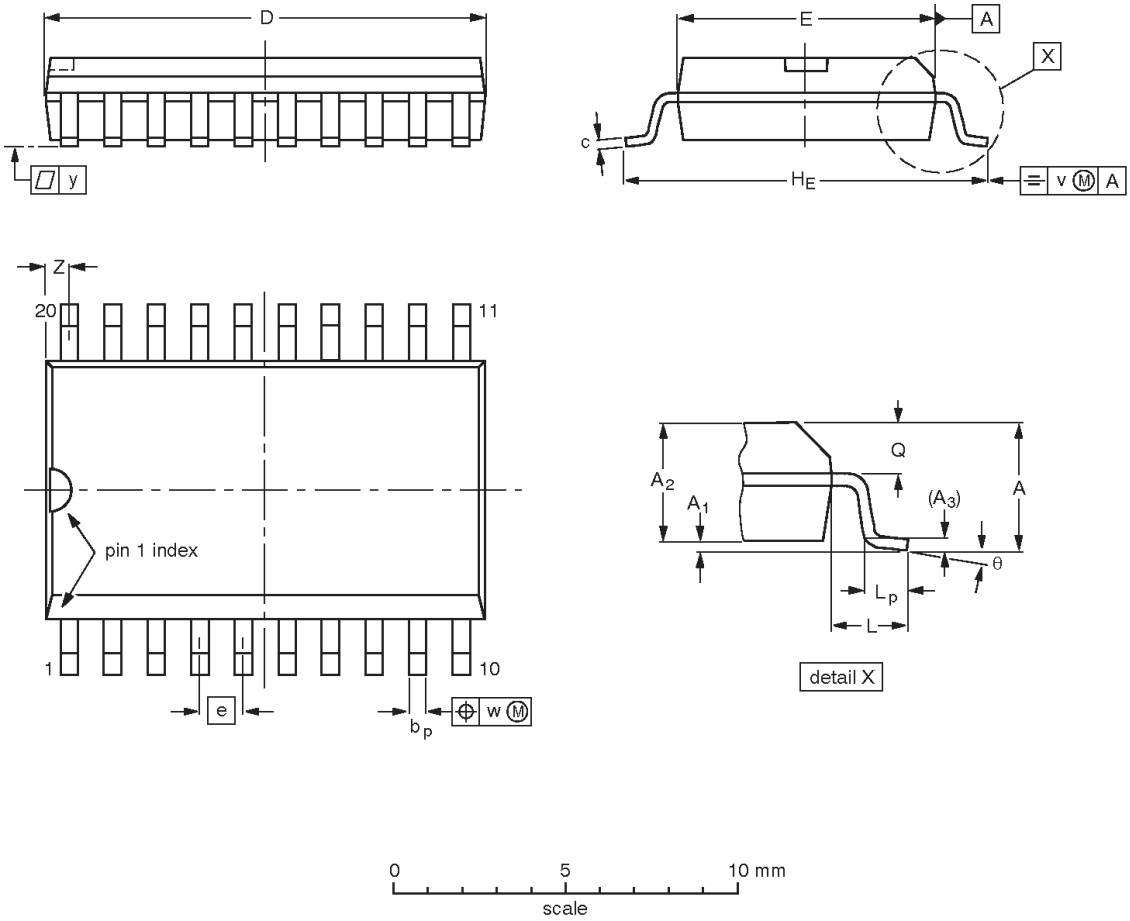

DIMENSIONS (inch dimensions are derived from the original mm dimensions)

UNIT	A max.	A_1	A_2	A_3	b_p	c	D (1)	E (1)	e	H_E	L	L_p	Q	v	w	y	Z (1)	θ
mm	2.65	0.30 0.10	2.45 2.25	0.25	0.49 0.36	0.32 0.23	13.0 12.6	7.6 7.4	1.27	10.65 10.00	1.4	1.1 0.4	1.1 1.0	0.25	0.25	0.1	0.9 0.4	8° 0°
inches	0.10	0.012 0.004	0.096 0.089	0.01	0.019 0.014	0.013 0.009	0.51 0.49	0.30 0.29	0.050	0.419 0.394	0.055	0.043 0.016	0.043 0.039	0.01	0.01	0.004	0.035 0.016	

Note

1. Plastic or metal protrusions of 0.15 mm maximum per side are not included.

OUTLINE VERSION	REFERENCES				EUROPEAN PROJECTION	ISSUE DATE
	IEC	JEDEC	EIAJ			
SOT163-1	075E04	MS-013AC				~~95-01-24~~ 97-05-22

SSOP20: plastic shrink small outline package; 20 leads; body width 5.3 mm **SOT339-1**

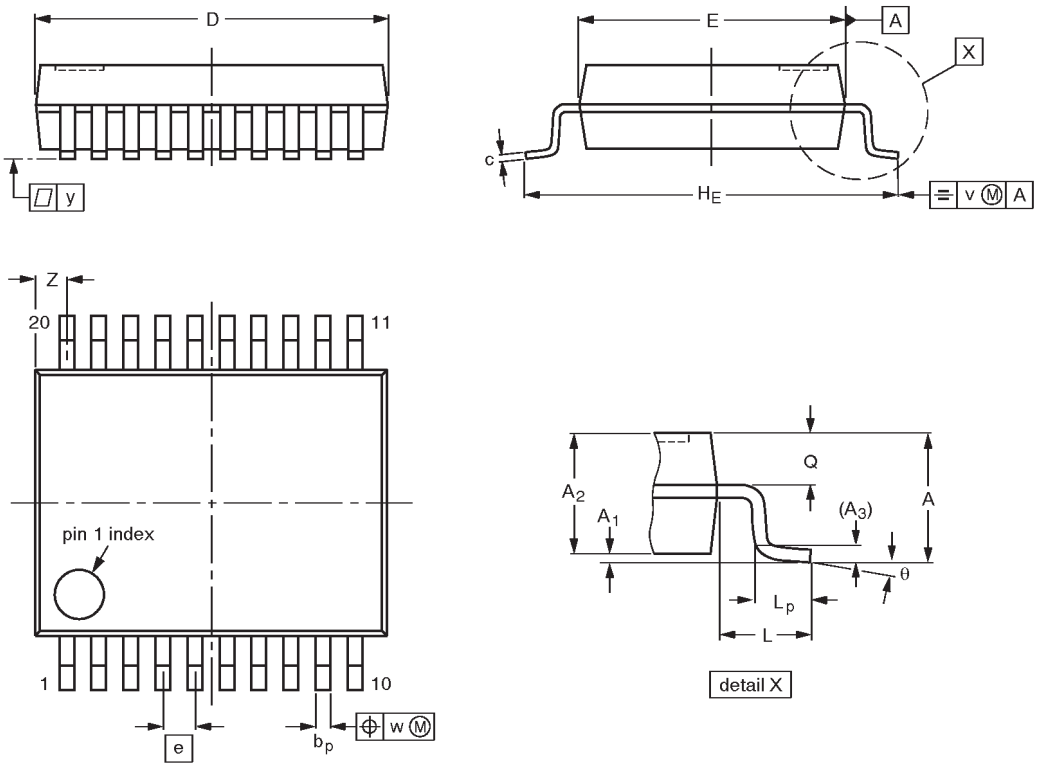

0 2.5 5 mm
scale

DIMENSIONS (mm are the original dimensions)

UNIT	A max.	A_1	A_2	A_3	b_p	c	D(1)	E(1)	e	H_E	L	L_p	Q	v	w	y	Z(1)	θ
mm	2.0	0.21 0.05	1.80 1.65	0.25	0.38 0.25	0.20 0.09	7.4 7.0	5.4 5.2	0.65	7.9 7.6	1.25	1.03 0.63	0.9 0.7	0.2	0.13	0.1	0.9 0.5	8° 0°

Note

1. Plastic or metal protrusions of 0.20 mm maximum per side are not included.

OUTLINE VERSION	REFERENCES				EUROPEAN PROJECTION	ISSUE DATE
	IEC	JEDEC	EIAJ			
SOT339-1		MO-150AE				~~93-09-08~~ 95-02-04

NOTES

Data sheet status

Data sheet status	Product status	Definition [1]
Objective specification	Development	This data sheet contains the design target or goal specifications for product development. Specification may change in any manner without notice.
Preliminary specification	Qualification	This data sheet contains preliminary data, and supplementary data will be published at a later date. Philips Semiconductors reserves the right to make chages at any time without notice in order to improve design and supply the best possible product.
Product specification	Production	This data sheet contains final specifications. Philips Semiconductors reserves the right to make changes at any time without notice in order to improve design and supply the best possible product.

[1] Please consult the most recently issued datasheet before initiating or completing a design.

Definitions

Short-form specification — The data in a short-form specification is extracted from a full data sheet with the same type number and title. For detailed information see the relevant data sheet or data handbook.

Limiting values definition — Limiting values given are in accordance with the Absolute Maximum Rating System (IEC 134). Stress above one or more of the limiting values may cause permanent damage to the device. These are stress ratings only and operation of the device at these or at any other conditions above those given in the Characteristics sections of the specification is not implied. Exposure to limiting values for extended periods may affect device reliability.

Application information — Applications that are described herein for any of these products are for illustrative purposes only. Philips Semiconductors make no representation or warranty that such applications will be suitable for the specified use without further testing or modification.

Disclaimers

Life support — These products are not designed for use in life support appliances, devices or systems where malfunction of these products can reasonably be expected to result in personal injury. Philips Semiconductors customers using or selling these products for use in such applications do so at their own risk and agree to fully indemnify Philips Semiconductors for any damages resulting from such application.

Right to make changes — Philips Semiconductors reserves the right to make changes, without notice, in the products, including circuits, standard cells, and/or software, described or contained herein in order to improve design and/or performance. Philips Semiconductors assumes no responsibility or liability for the use of any of these products, conveys no license or title under any patent, copyright, or mask work right to these products, and makes no representations or warranties that these products are free from patent, copyright, or mask work right infringement, unless otherwise specified.

Philips Semiconductors
811 East Arques Avenue
P.O. Box 3409
Sunnyvale, California 94088–3409
Telephone 800-234-7381

© Copyright Philips Electronics North America Corporation 1998
All rights reserved. Printed in U.S.A.

print code Date of release: 10-98

Document order number: 9397-750-05141

Let's make things better.

Philips Semiconductors

PHILIPS

Looking for pricing, stock, or lifecycle information?

Click below to explore more details on WIN SOURCE:

- View N74F573DB,112 on WIN SOURCE
- NXP / Nexperia Information

Optimize Your Supply Chain with WIN SOURCE Solutions

- Global Sourcing Solution
- Obsolete Management
- Cost Control Management
- Shortage Management
- Alternative Solution
- Excess Inventory Management