THE DATASHEET OF

MMT05B260T3G

www.win-source.net 0086-755-83957316

MMT05B230T3, MMT05B260T3, MMT05B310T3

Preferred Devices

Thyristor Surge Protectors

High Voltage Bidirectional TSPD

These Thyristor Surge Protective devices (TSPD) prevent overvoltage damage to sensitive circuits by lightning, induction and power line crossings. They are breakover−triggered crowbar protectors. Turn−off occurs when the surge current falls below the holding current value.

Secondary protection applications for electronic telecom equipment at customer premises.

Features

- High Surge Current Capability: 50 A 10 x 1000 μsec, for Controlled Temperature Environments
- The MMT05B230T3 Series is used to help equipment meet various regulatory requirements including: Bellcore 1089, ITU K.20 & K.21, IEC 950, UL 1459 & 1950 and FCC Part 68
- Bidirectional Protection in a Single Device
- Little Change of Voltage Limit with Transient Amplitude or Rate
- Freedom from Wearout Mechanisms Present in Non−Semiconductor Devices
- Fail−Safe, Shorts When Overstressed, Preventing Continued Unprotected Operation
- Surface Mount Technology (SMT)
- Indicates UL Registered − File #E210057
- Pb−Free Packages are Available

MAXIMUM RATINGS (T_J = 25°C unless otherwise noted)

Rating	Symbol	Value	Unit
Off−State Voltage − Maximum MMT05B230T3 MMT05B260T3 MMT05B310T3	V_{DM}	 ±170 ±200 ±270	V
Maximum Pulse Surge Short Circuit Current Non−Repetitive Double Exponential Decay Waveform (Notes 1 and 2) (−25°C Initial Temperature) 8 x 20 μsec 10 x 160 μsec 10 x 560 μsec 10 x 1000 μsec	 I_{PPS1} I_{PPS2} I_{PPS3} I_{PPS4}	 ±150 ±100 ±70 ±50	A(pk)
Maximum Non−Repetitive Rate of Change of On−State Current Double Exponential Waveform, R = 1.0, L = 1.5 μH, C = 1.67 μF, I_{pk} = 110A	di/dt	±150	A/μs

Stresses exceeding Maximum Ratings may damage the device. Maximum Ratings are stress ratings only. Functional operation above the Recommended Operating Conditions is not implied. Extended exposure to stresses above the Recommended Operating Conditions may affect device reliability.

1. Allow cooling before testing second polarity.
2. Measured under pulse conditions to reduce heating.

ON Semiconductor®

http://onsemi.com

BIDIRECTIONAL TSPD
50 AMPERE SURGE
265 thru 365 VOLTS

SMB
(No Polarity)
(Essentially JEDEC DO−214AA)
CASE 403C

MARKING DIAGRAMS

RPBx = Device Code
x = G or J
Y = Year
WW = Work Week
▪ = Pb−Free Package

ORDERING INFORMATION

See detailed ordering and shipping information in the package dimensions section on page 5 of this data sheet.

Preferred devices are recommended choices for future use and best overall value.

© Semiconductor Components Industries, LLC, 2006

May, 2006 − Rev. 9

Publication Order Number:
MMT05B230T3/D

THERMAL CHARACTERISTICS

Characteristic	Symbol	Max	Unit
Operating Temperature Range Blocking or Conducting State	T_{J1}	−40 to +125	°C
Overload Junction Temperature − Maximum Conducting State Only	T_{J2}	+175	°C
Instantaneous Peak Power Dissipation (I_{pk} = 50 A, 10x1000 μsec @ 25°C)	P_{PK}	2000	W
Maximum Lead Temperature for Soldering Purposes 1/8″ from Case for 10 Seconds	T_L	260	°C

ELECTRICAL CHARACTERISTICS (T_J = 25°C unless otherwise noted) Devices are bidirectional. All electrical parameters apply to forward and reverse polarities.

Characteristics		Symbol	Min	Typ	Max	Unit
Breakover Voltage (Both polarities)		$V_{(BO)}$				V
(dv/dt = 100 V/μs, I_{SC} = 1.0 A, Vdc = 1000 V)	MMT05B230T3		−	−	265	
	MMT05B260T3		−	−	320	
	MMT05B310T3		−	−	365	
(+65°C)						
	MMT05B230T3		−	−	280	
	MMT05B260T3		−	−	340	
	MMT05B310T3		−	−	400	
Breakover Voltage (Both polarities)		$V_{(BO)}$				V
(f = 60 Hz, I_{SC} = 1.0 A(rms), V_{OC} = 1000 V(rms),	MMT05B230T3		−	−	265	
R_I = 1.0 kΩ, t = 0.5 cycle) (Note 3)	MMT05B260T3		−	−	320	
	MMT05B310T3		−	−	365	
(+65°C)						
	MMT05B230T3		−	−	280	
	MMT05B260T3		−	−	340	
	MMT05B310T3		−	−	400	
Breakover Voltage Temperature Coefficient		$dV_{(BO)}/dT_J$	−	0.08	−	%/°C
Breakdown Voltage ($I_{(BR)}$ = 1.0 mA) Both polarities		$V_{(BR)}$				V
	MMT05B230T3		−	190	−	
	MMT05B260T3		−	240	−	
	MMT05B310T3		−	280	−	
Off State Current (V_{D1} = 50 V) Both polarities		I_{D1}	−	−	2.0	μA
(V_{D2} = V_{DM}) Both polarities		I_{D2}	−	−	5.0	
On−State Voltage (I_T = 1.0 A) (PW ≤ 300 μs, Duty Cycle ≤ 2%) (Note 3)		V_T	−	1.53	3.0	V
Breakover Current (f = 60 Hz, V_{DM} = 1000 V(rms), R_S = 1.0 kΩ) − Both polarities		I_{BO}	−	230	−	mA
Holding Current (Both polarities) (Note 3) V_S = 500 V; I_T (Initiating Current) = ±1.0 A		I_H	150	340	−	mA
Critical Rate of Rise of Off−State Voltage (Linear waveform, V_D = Rated V_{BR}, T_J = 25°C)		dv/dt	2000	−	−	V/μs
Capacitance (f = 1.0 MHz, 50 Vdc, 1.0 V rms Signal)		C_O	−	22	−	pF
(f = 1.0 MHz, 2.0 Vdc, 15 mV rms Signal)			−	53	75	

3. Measured under pulse conditions to reduce heating.

Voltage Current Characteristic of TSPD (Bidirectional Device)

Symbol	Parameter
I_{D1}, I_{D2}	Off State Leakage Current
V_{D1}, V_{D2}	Off State Blocking Voltage
V_{BR}	Breakdown Voltage
V_{BO}	Breakover Voltage
I_{BO}	Breakover Current
I_H	Holding Current
V_{TM}	On State Voltage

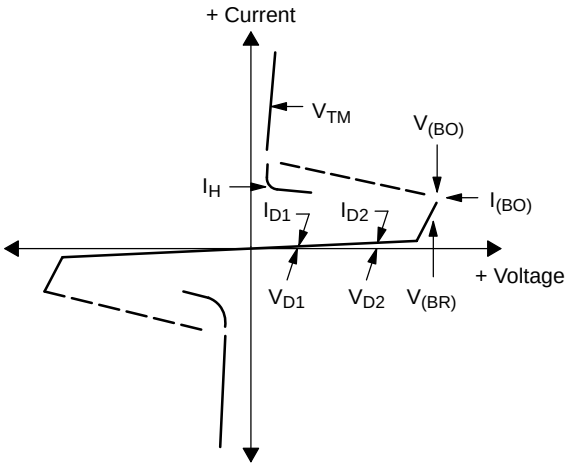

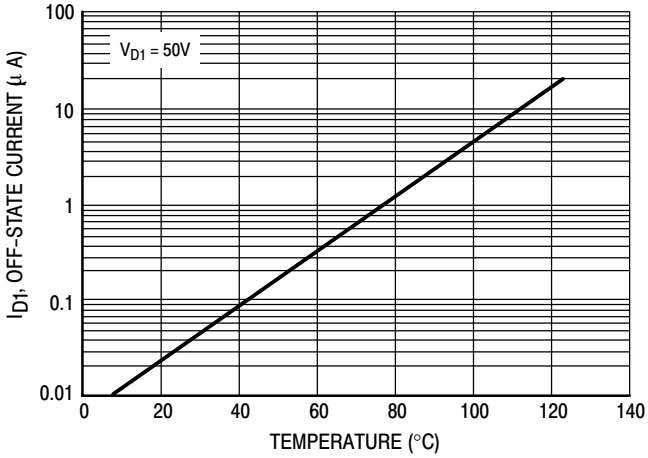

Figure 1. Off−State Current versus Temperature

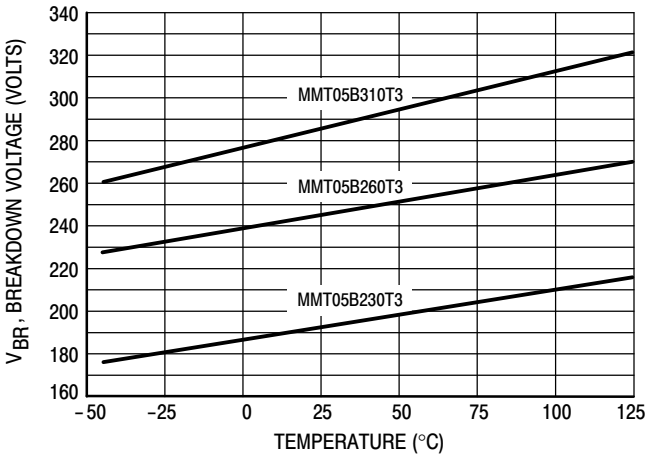

Figure 2. Breakdown Voltage versus Temperature

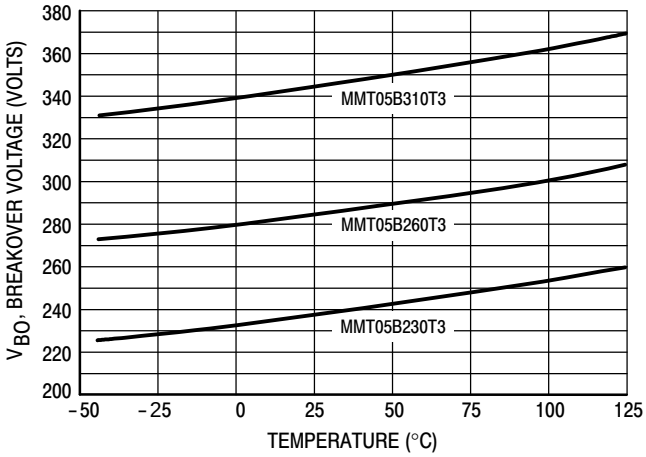

Figure 3. Breakover Voltage versus Temperature

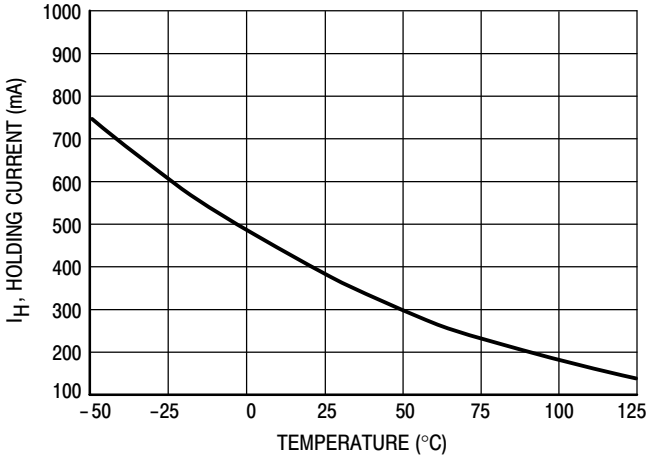

Figure 4. Holding Current versus Temperature

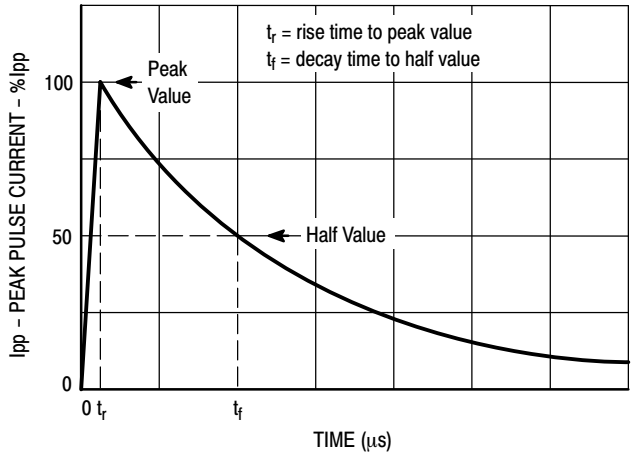

Figure 5. Exponential Decay Pulse Waveform

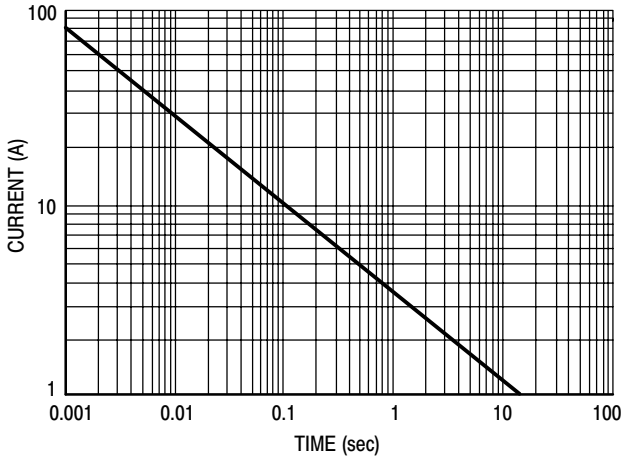

Figure 6. Peak Surge On−State Current versus Surge Current Duration, Sinusoidal Waveform

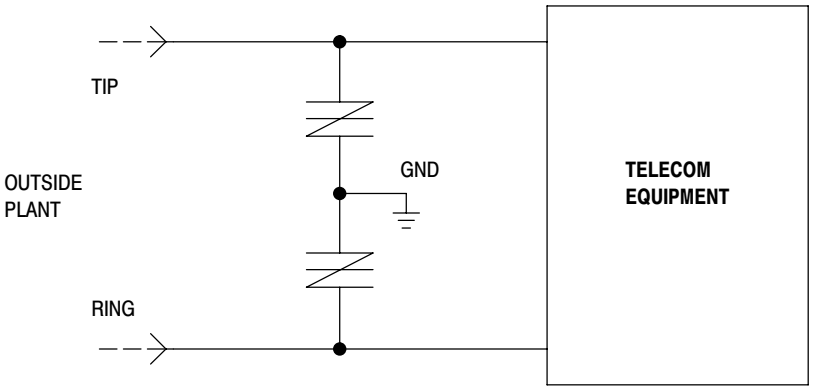

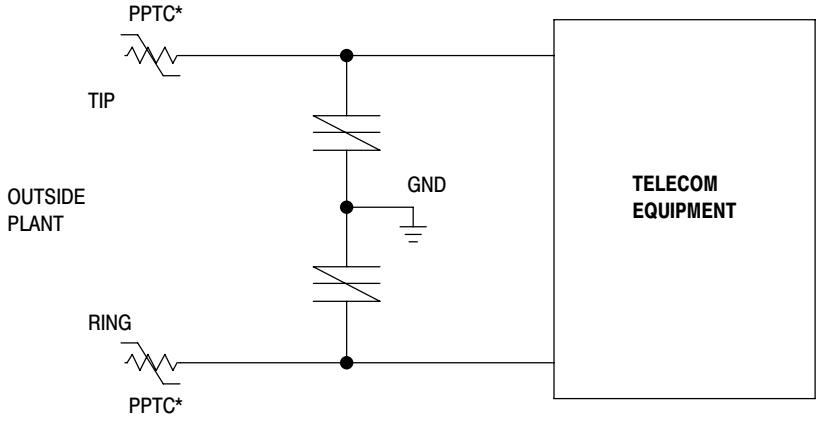

*Polymeric PTC (positive temperature coefficient) overcurrent protection device

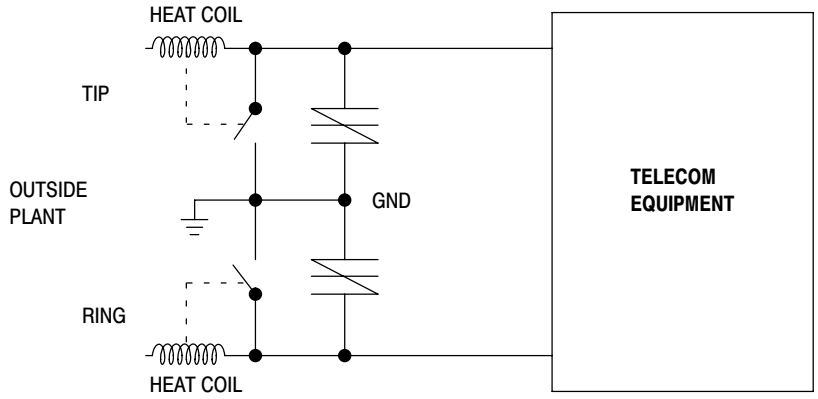

ORDERING INFORMATION

Device	Package	Shipping†
MMT05B230T3	SMB	2500 / Tape & Reel
MMT05B230T3G	SMB (Pb−Free)	
MMT05B260T3	SMB	
MMT05B260T3G	SMB (Pb−Free)	
MMT05B310T3	SMB	
MMT05B310T3G	SMB (Pb−Free)	

†For information on tape and reel specifications, including part orientation and tape sizes, please refer to our Tape and Reel Packaging Specifications Brochure, BRD8011/D.

PACKAGE DIMENSIONS

SMB
(No Polarity)
(Essentially JEDEC DO−214AA)
CASE 403C−01
ISSUE A

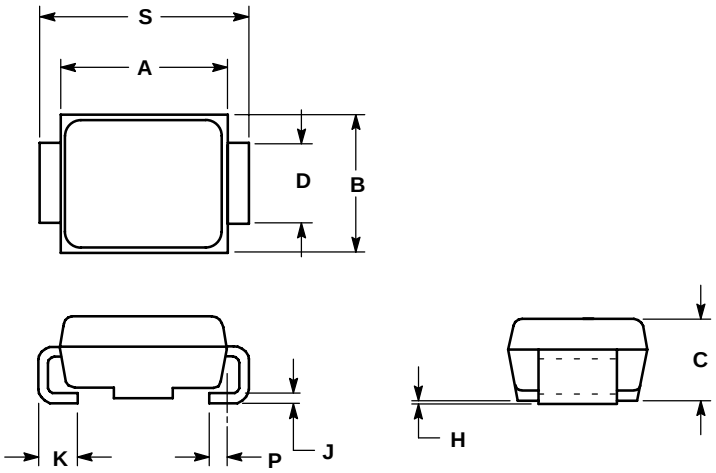

NOTES:
1. DIMENSIONING AND TOLERANCING PER ANSI Y14.5M, 1982.
2. CONTROLLING DIMENSION: INCH.
3. D DIMENSION SHALL BE MEASURED WITHIN DIMENSION P.

	INCHES		MILLIMETERS	
DIM	MIN	MAX	MIN	MAX
A	0.160	0.180	4.06	4.57
B	0.130	0.150	3.30	3.81
C	0.075	0.095	1.90	2.41
D	0.077	0.083	1.96	2.11
H	0.0020	0.0060	0.051	0.152
J	0.006	0.012	0.15	0.30
K	0.030	0.050	0.76	1.27
P	0.020 REF		0.51 REF	
S	0.205	0.220	5.21	5.59

SOLDERING FOOTPRINT*

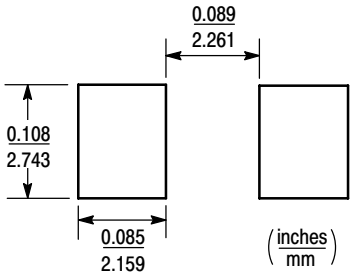

*For additional information on our Pb−Free strategy and soldering details, please download the ON Semiconductor Soldering and Mounting Techniques Reference Manual, SOLDERRM/D.

ON Semiconductor and ON are registered trademarks of Semiconductor Components Industries, LLC (SCILLC). SCILLC reserves the right to make changes without further notice to any products herein. SCILLC makes no warranty, representation or guarantee regarding the suitability of its products for any particular purpose, nor does SCILLC assume any liability arising out of the application or use of any product or circuit, and specifically disclaims any and all liability, including without limitation special, consequential or incidental damages. “Typical” parameters which may be provided in SCILLC data sheets and/or specifications can and do vary in different applications and actual performance may vary over time. All operating parameters, including “Typicals” must be validated for each customer application by customer’s technical experts. SCILLC does not convey any license under its patent rights nor the rights of others. SCILLC products are not designed, intended, or authorized for use as components in systems intended for surgical implant into the body, or other applications intended to support or sustain life, or for any other application in which the failure of the SCILLC product could create a situation where personal injury or death may occur. Should Buyer purchase or use SCILLC products for any such unintended or unauthorized application, Buyer shall indemnify and hold SCILLC and its officers, employees, subsidiaries, affiliates, and distributors harmless against all claims, costs, damages, and expenses, and reasonable attorney fees arising out of, directly or indirectly, any claim of personal injury or death associated with such unintended or unauthorized use, even if such claim alleges that SCILLC was negligent regarding the design or manufacture of the part. SCILLC is an Equal Opportunity/Affirmative Action Employer. This literature is subject to all applicable copyright laws and is not for resale in any manner.

PUBLICATION ORDERING INFORMATION

LITERATURE FULFILLMENT:
Literature Distribution Center for ON Semiconductor
P.O. Box 5163, Denver, Colorado 80217 USA
Phone: 303−675−2175 or 800−344−3860 Toll Free USA/Canada
Fax: 303−675−2176 or 800−344−3867 Toll Free USA/Canada
Email: orderlit@onsemi.com

N. American Technical Support: 800−282−9855 Toll Free USA/Canada
Europe, Middle East and Africa Technical Support:
Phone: 421 33 790 2910
Japan Customer Focus Center
Phone: 81−3−5773−3850

ON Semiconductor Website: **www.onsemi.com**

Order Literature: http://www.onsemi.com/orderlit

For additional information, please contact your local Sales Representative

Looking for pricing, stock, or lifecycle information?

Click below to explore more details on WIN SOURCE:

- View MMT05B260T3G on WIN SOURCE
- ON Semiconductor Information

Optimize Your Supply Chain with WIN SOURCE Solutions

- Global Sourcing Solution
- Obsolete Management
- Cost Control Management
- Shortage Management
- Alternative Solution
- Excess Inventory Management