MIC2297

40V PWM Boost Regulator
White LED Driver

General Description

The MIC2297 is a 600KHz PWM boost-switching regulator that is optimized for driving 6-10 series white LEDs. With its internal 40V switch and a guaranteed switch current of 1.2A, the MIC2297 easily drives a string of 10 white LEDs in series at 20mA, ensuring a high level of brightness and eliminating several ballast resistors.

The MIC2297 implements constant frequency 600KHz PWM control. The high frequency PWM operation saves board space by reducing external component sizes. The added benefit of the constant frequency PWM operation is much lower noise and input ripple injected back to the battery source than with variable frequency topologies.

To optimize efficiency, the feedback voltage is set to 200mV. This reduced voltage reduces the power dissipation in the current set resistor, and allows the lowest total output voltage, hence minimal current draw from the battery.

The MIC2297 is available with output over-voltage protection that protects the IC and external components in case of open LED conditions.

The MIC2297 is available in low profile small size 10-pin 2.5mm x 2.5mm MLF® package. The MIC2297 has a junction temperature range of –40°C to +125°C.

Features

- 2.5V to 10V input voltage range
- Output voltage up to 40V
- 1.2A switch current
- 600KHz PWM operation
- Trimmed 200mV feedback voltage
- Output over voltage protection (fixed or adjustable)
- PWM Brightness Control
- DAC Brightness Control
- <1% line regulation
- 1µA shutdown current
- Over temperature protection
- UVLO
- 10-pin 2.5mm x 2.5mm MLF® package
- –40°C to +125°C junction temperature range

Applications

- PDAs
- GPS systems
- Smart phones
- Mini PCs
- Digital cameras
- IP phones
- LED flashlights

Typical Applications

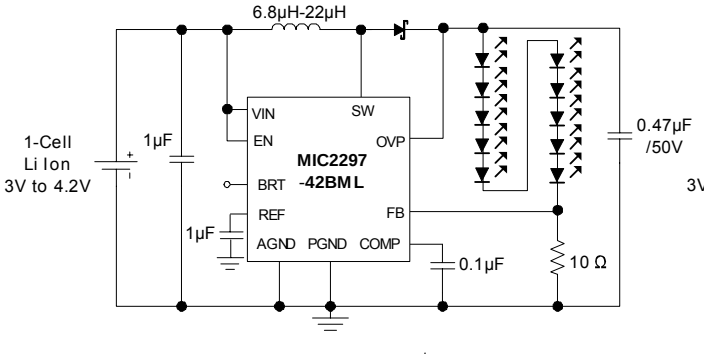

10 Series LED Driver with Output OVP

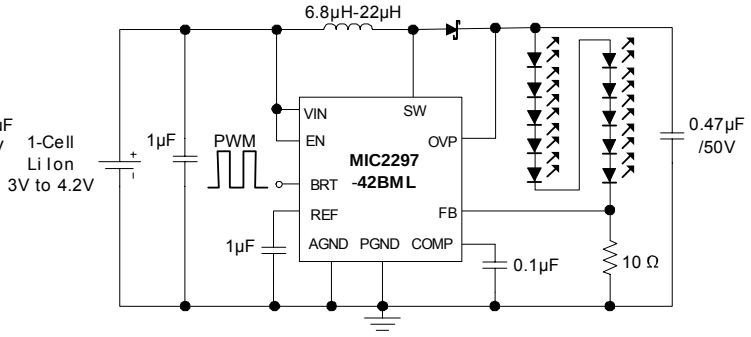

10 Series LED Driver with PWM Brightness Control

MLF and *Micro*LeadFrame is a trademark of Amkor Technology, Inc.

Ordering Information

Part Number	Mark Code*	Output Over Voltage Protection	Junction Temp. Range	Package	Lead Finish
MIC2297-15YML	$\overline{S}$115	15V	–40°C to 125°C	10-Pin 2.5 x2.5 MLF®	Pb-Free
MIC2297-42YML	$\overline{S}$142	42V	–40°C to 125°C	10-Pin 2.5 x2.5 MLF®	Pb-Free

* (¯) Top bar symbol after PI indicator identifying Pb-Free may not be to scale.

Pin Configuration

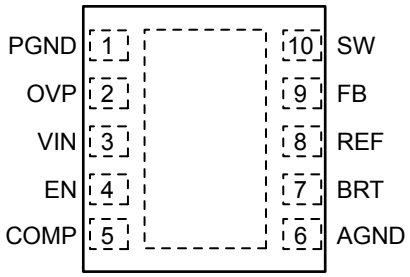

Pin Description

Pin Number	Pin Name	Pin Function
1	PGND	Ground (Return).
2	OVP	Over Voltage Protection (Input): Connect to the output to clamp the maximum output voltage. A resistor divider from this pin to ground could be used to raise the OVP level of the 15V OVP option.
3	VIN	Supply (Input): Input voltage.
4	EN	Enable (Input): Logic high enables regulator. Logic low shuts down regulator.
5	COMP	Compensation Pin.
6	AGND	Analog Ground.
7	BRT	Brightness Control (Input): Either an analog (DAC) or filtered PWM signal can be used. The gain equation is: VFB = VBRT / 5. This pin should be left open if the brightness function is not used. In that case, the FB will be set to its default value of 200mV.
8	REF	Reference Voltage (Output): This node is equal to the voltage on the FB pin. A capacitor from REF to ground should be used to filter the BRT voltage if PWM dimming is implemented. A capacitor from REF to ground can also be used to implement a soft-start function. This pin can be left open if not used.
9	FB	Feedback (Input): Output voltage sense node. Default value is 200mV. Connect the cathode of the LED chain to this pin. Connect current set resistor from this pin to ground.
10	SW	Switch Node (Output): Internal power BIPOLAR collector.
EPad	GND	Ground (Return): Backside pad.

Absolute Maximum Rating [1]

Supply voltage (V_{IN}).....12V
Switch voltage (V_{SW}) .....-0.3V to 50V
Enable pin voltage (V_{EN})..... -0.3 to V_{IN}
FB Voltage (V_{FB}).....6V
V_{BRT} 6V
Switch Current (I_{SW}) 3A
Ambient Storage Temperature (T_S).....-65°C to +150°C
ESD Rating [3]..... 2KV

Operating Range [2]

Supply Voltage (V_{IN})..... 2.5V to 10V
Maximum Output Voltage (V_{OUT}).....40V
Junction Temperature Range (T_J).....-40°C to +125°C
Package Thermal Impedance
MLF®-10 (θ_{JA}).....65°C/W

Electrical Characteristics

T_A=25°C, V_{IN} =V_{EN} = 3.6V, V_{OUT} = 30V, I_{OUT} = 20mA, unless otherwise noted. **Bold** values indicate -40°C ≤ T_J ≤ 125°C.

Symbol	Parameter	Condition	Min	Typ	Max	Units
V_{IN}	Supply Voltage Range		**2.5**		**10**	V
V_{UVLO}	Under-Voltage Lockout		1.8	2.1	2.4	V
I_{VIN}	Quiescent Current	V_{FB} = 200mV (not switching)		4	**7**	mA
I_{SD}	Shutdown Current	V_{EN} = 0V[4]		0.1	**1**	µA
V_{FB}	Feedback Voltage	(+/-5%)	190	200	210	mV
		(+/±6.5%) (Over Temp)	**187**		**213**	
I_{FB}	Feedback Input Current	V_{FB} = 200mV		-450		nA
	Line Regulation[5]	2.5V ≤ V_{IN} ≤ 4.5V		0.5	**1**	%
	Load Regulation[5]	5mA ≤ I_{OUT} ≤ 20mA		0.5		%
D_{MAX}	Maximum Duty Cycle		**93**			%
I_{SW}	Switch Current Limit	V_{IN} 2.5V	**1.2**	1.7	2.5	A
V_{SW}	Switch Saturation Voltage	V_{IN} = 2.5V, I_{SW} = 0.5A		220		mV
I_{SW}	Switch Leakage Current	V_{EN} = 0V, V_{IN} = 10V		0.01	**1**	µA
V_{EN}	Enable Threshold	TURN ON TURN OFF	**1.5**		 **0.4**	V
I_{EN}	Enable Pin Current	V_{EN} = 10V		20	40	µA
V_{REF}	Brightness Control Accuracy	V_{BRT} = 0V V_{BRT} = 1V V_{BRT} = 5V V_{BRT} = OPEN	 **0.185** **0.93** **0.19**	 0.2 1.0 0.2	**0.015** **0.215** **1.05** **0.21**	V
f_{SW}	Oscillator Frequency		525	600	675	KHz
V_{OVP}	Over Voltage protection	MIC2297-42BML (nominal voltage) MIC2297-15BML (nominal voltage)	40.5 15	42 16	47 18	V
T_J	Over-Temperature Threshold Shutdown			150		°C
		Hysteresis		10		°C

Notes:

1. Absolute maximum ratings indicate limits beyond which damage to the component may occur. Electrical specifications do not apply when operating the device outside of its operating ratings. The maximum allowable power dissipation is a function of the maximum junction temperature, $T_{J(Max)}$, the junction-to-ambient thermal resistance, θ_{JA}, and the ambient temperature, T_A. The maximum allowable power dissipation will result in excessive die temperature, and the regulator will go into thermal shutdown.
2. This device is not guaranteed to operate beyond its specified operating rating.
3. IC devices are inherently ESD sensitive. Handling precautions required. Human body model.
4. I_{SD} = I_{VIN}.
5. Guaranteed by design.

Typical Characteristics

Supply Current vs. Input Voltage

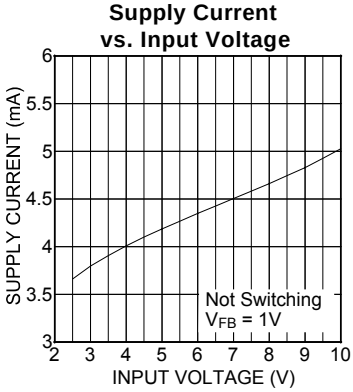

Max Duty Cycle vs. Input Voltage

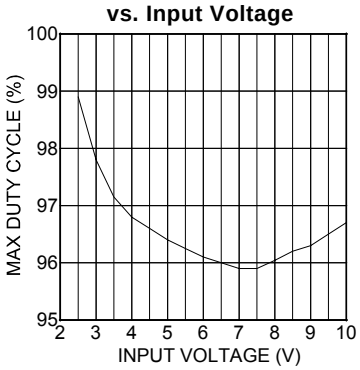

Frequency vs. Input Voltage

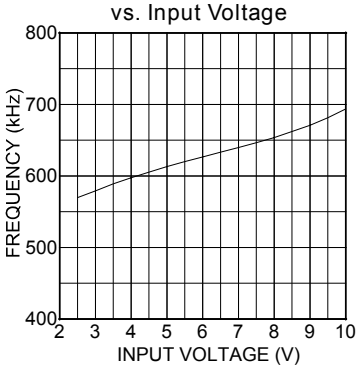

Switch Current vs. Switch Voltage

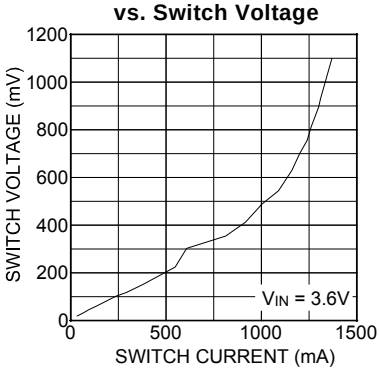

Switch Voltage vs. Input Voltage

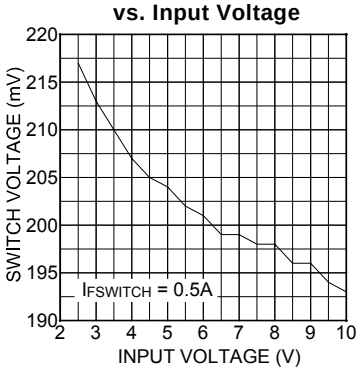

LED Current vs. Input Voltage

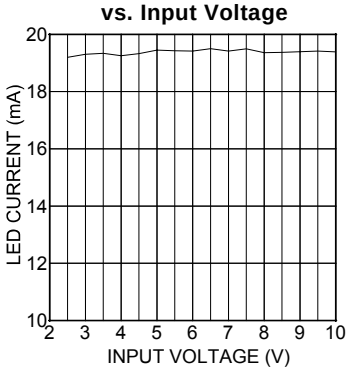

BRT Voltage vs. Input Voltage

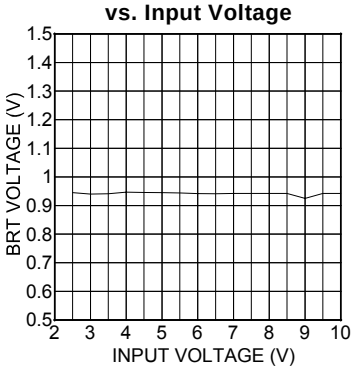

FB Voltage vs. Input Voltage

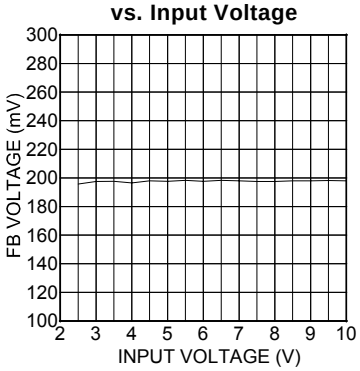

LED Current vs. BRT Voltage

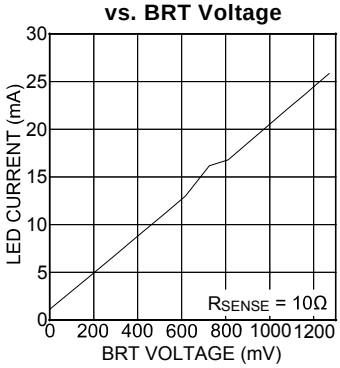

FB Voltage vs. BRT Voltage

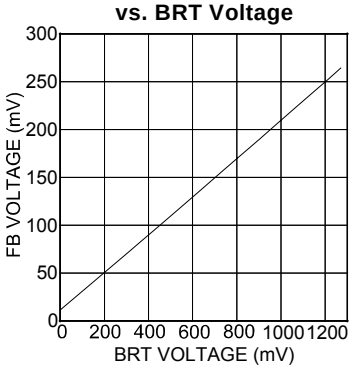

Efficiency for 10 LEDs @ 20mA vs. Input Voltage

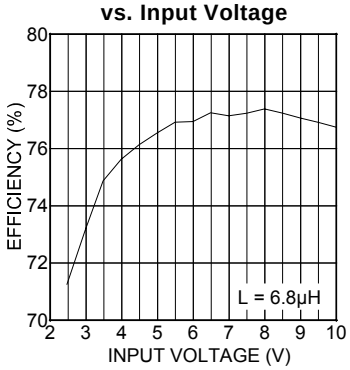

Efficiency for 10 LEDs vs. LED Current

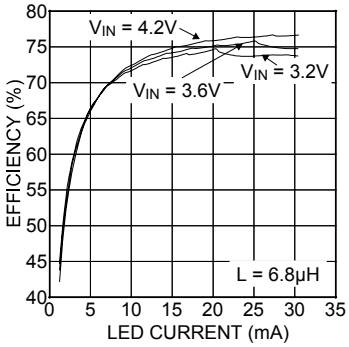

Typical Characteristics (continued)

Efficiency for 10 LEDs vs. LED Current

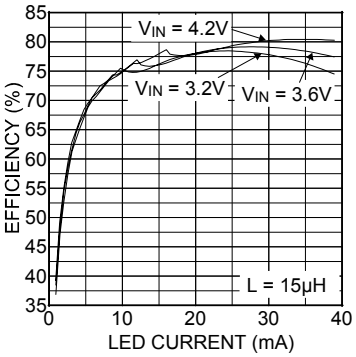

Efficiency for 9 LEDs vs. LED Current

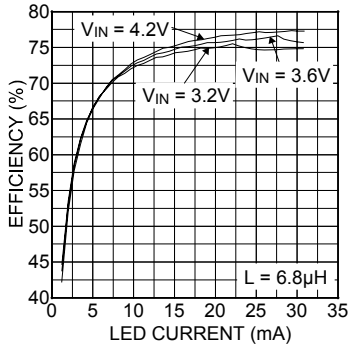

Efficiency for 9 LEDs vs. LED Current

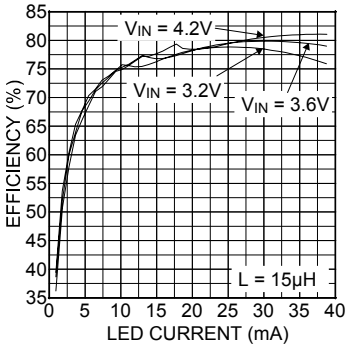

LED Current vs. Duty Cycle

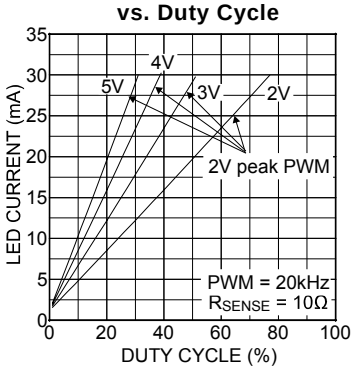

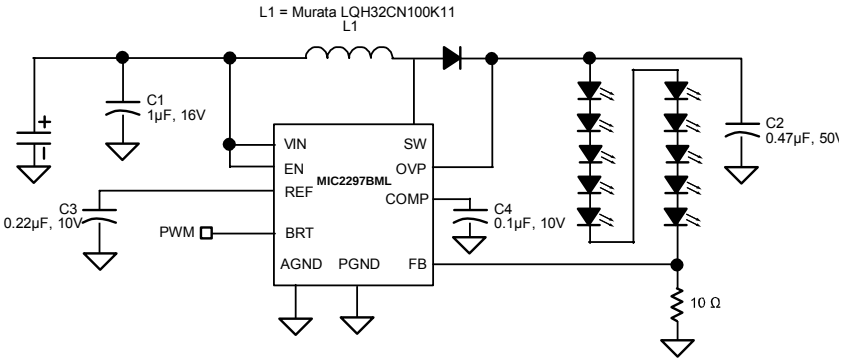

Functional Characteristics

Enable Characteristics

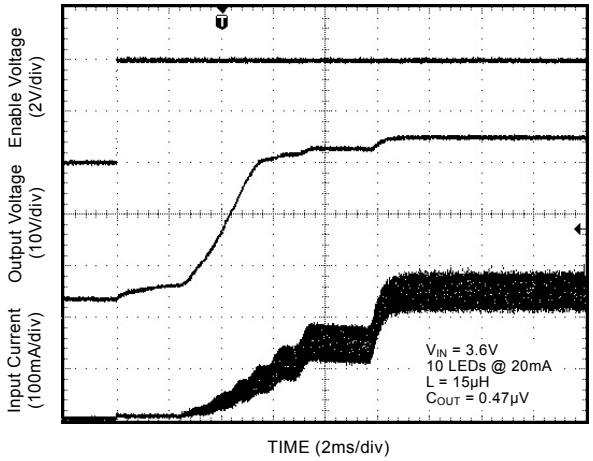

Waveform 1

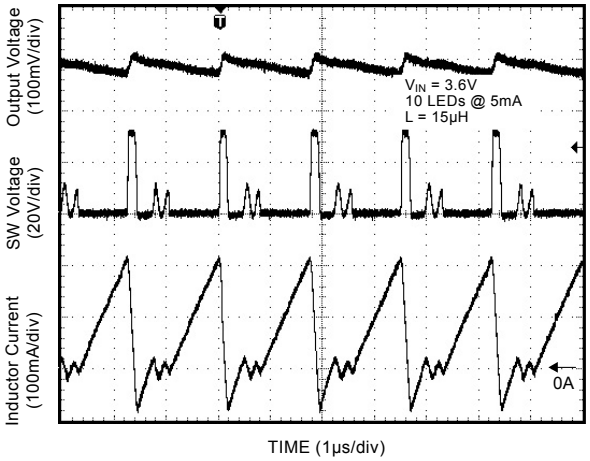

Waveform 2

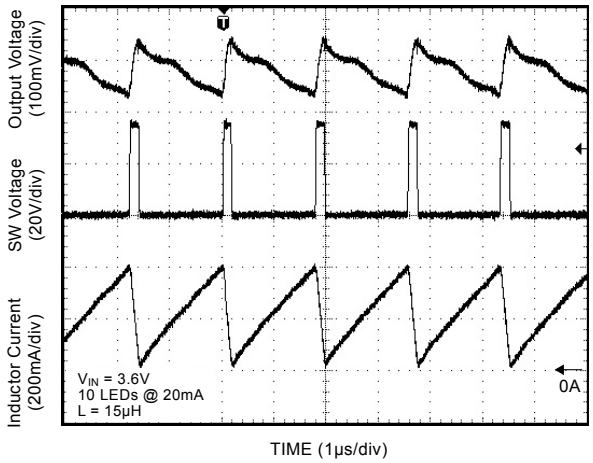

Block Diagram

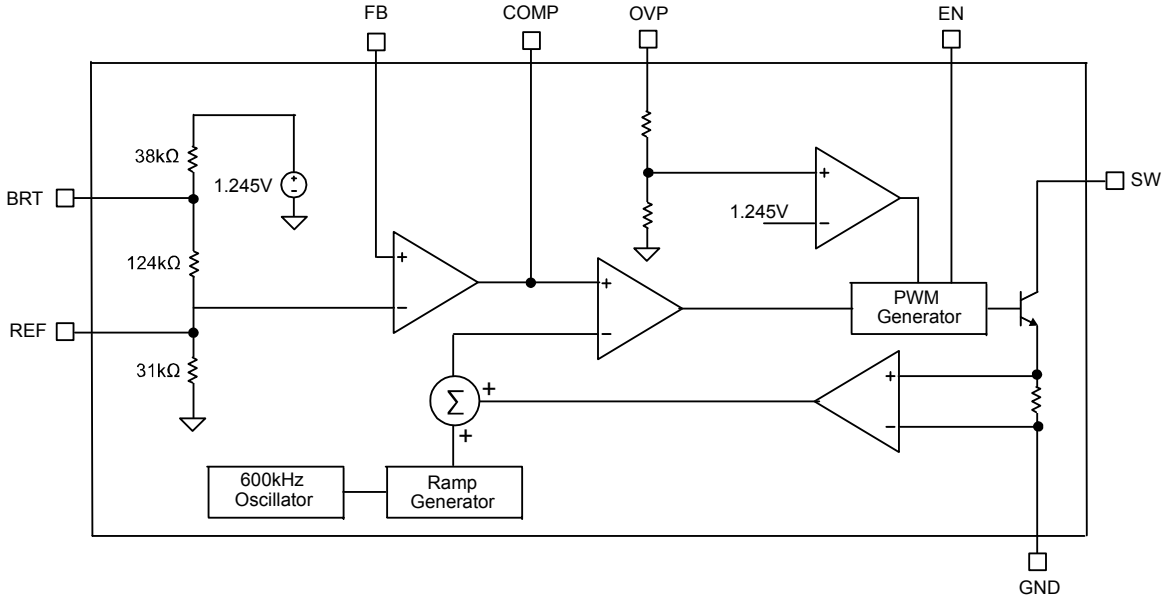

MIC2297 Block Diagram

Functional Description

The MIC2297 is a constant frequency, PWM current mode boost regulator. The MIC2297 uses peak current mode control. The block diagram is shown above. The MIC2297 is composed of an oscillator, slope compensation ramp generator, current amplifier, gm error amplifier, PWM generator, and a 1.2A bipolar output transistor. The oscillator generates a 600kHz clock. The clock's two functions are to trigger the PWM generator that turns on the output transistor and to reset the slope compensation ramp generator. The current amplifier is used to measure the switch current by amplifying the voltage signal from the internal sense resistor. The output of the current amplifier is summed with the output of the slope compensation ramp generator. This summed current-loop signal is fed to one of the inputs of the PWM generator.

The gm error amplifier measures the LED current through the external sense resistor and amplifies the error between the detected signal and the 200mV reference voltage. The output of the gm error amplifier provides the voltage-loop signal that is fed to the other input of the PWM generator. When the current-loop signal exceeds the voltage-loop signal, the PWM generator turns off the bipolar output transistor. The next clock period initiates the next switching cycle, maintaining the constant frequency current-mode PWM control. The LED current is set by the feedback resistor:

$$I_{LED} = \frac{200mV}{R_{FB}}$$

The Enable pin shuts down the output switching and disables control circuitry to reduce input current-to-leakage levels. Enable pin input current is zero at zero volts.

DC-to-DC PWM Boost Conversion

The MIC2297 is a constant-frequency boost converter. It operates by taking a DC input voltage and regulating a higher DC output voltage. Figure 2 shows a typical circuit. Boost regulation is achieved by turning on an internal switch, which draws current through the inductor (L1). When the switch turns off, the inductor's magnetic field collapses. This causes the current to be discharged into the output capacitor through an external Schottky diode (D1). Waveforms 1 and 2 show Output Voltage ripple, SW Voltage, and Indicator Current for 5mA and 20mA LED current respectively. Voltage regulation is achieved by modulating the pulse width or pulse-width modulation (PWM).

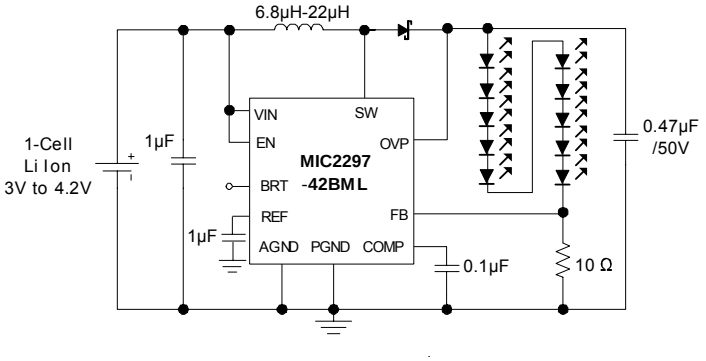

Figure 2. Typical Application Circuit

Duty Cycle Considerations

Duty cycle refers to the switch on-to-off time ratio and can be calculated as follows for a boost regulator:

$$D = 1 - \frac{V_{in}}{V_{out}}$$

However, at light loads the inductor will completely discharge before the end of a switching cycle. The current in the inductor reaches 0A before the end of the switching cycle. This is known as discontinuous conduction mode (DCM). DCM occurs when:

$$I_{out} < \frac{V_{in}}{V_{out}} \cdot \frac{I_{peak}}{2}$$

Where

$$I_{peak} = \frac{(V_{out} - V_{in})}{L \cdot f} \cdot \left(\frac{V_{in}}{V_{out}}\right)$$

In DCM, the duty cycle is smaller than in continuous conduction mode. In DCM the duty cycle is given by:

$$D = \frac{f \cdot \sqrt{2 \cdot L \cdot I_{out} \cdot (V_{out} - V_{in})}}{V_{in}}$$

The duty cycle required for voltage conversion should be less than the maximum duty cycle of 95%. Also, in light load conditions where the input voltage is close to the output voltage, the minimum duty cycle can cause pulse skipping. This is due to the energy stored in the inductor causing the output to overshoot slightly over the regulated output voltage. During the next cycle, the error amplifier detects the output as being high and skips the following pulse. This effect can be reduced by increasing the minimum load or by increasing the inductor value. Increasing the inductor value reduces peak current.

Over-Voltage Protection

The MIC2297 has an over-voltage protection function. If an LED is disconnected from the circuit or the feedback pin is shorted to ground, the feedback pin will fall to ground potential. This will cause the MIC2297 to switch at full duty cycle in an attempt to maintain the feedback voltage. As a result, the output voltage will climb out of control. This may cause the switch node voltage to exceed its maximum voltage rating, possibly damaging the IC and the external components. To ensure the highest level of protection, the MIC2297 OVP pin will shut the switch off when an over-voltage condition is detected, saving itself and the output capacitor.

Brightness Control

In the MIC2297, the reference to the voltage error amplifier is pinned out. The BRT pin and REF pin form a voltage divider off the internal 1.245V reference. The voltage is such that with nothing connected to the BRT pin, the REF voltage is 0.2V and the BRT voltage is 1V. The REF voltage is 1/5 the BRT voltage.

The minimum REF voltage with BRT pulled to ground is typically 10mV. With a 10Ω sense resistor, the LED current is typically 1mA with the BRT pin pulled to ground.

An analog DC voltage can be connected to the BRT pin. The MIC2297 will create an LED current proportional to the BRT voltage according to the following equation:

$$I_{LED} = \frac{BRT}{5 \bullet R_{sense}}$$

Where BRT is the voltage applied to the BRT pin, and Rsense is the sense resistor used in the LED string. It's important to use a 1uF ceramic capacitor on the REF pin to filter any noise.

An external PWM signal can be applied to the BRT for dimming. The 1uF REF capacitor and internal BRT 124kΩ resistor form an RC that filters the voltage to the REF pin. The LED current is proportional the PWM duty cycle according to the following equation:

$$I_{LED} = \frac{V_{peak} \bullet D}{5 \bullet R_{sense}}$$

Where Vpeak is the peak PWM voltage and D is the duty cycle of the PWM signal.

Component Selection

Inductor

Inductor selection is a balance between efficiency, stability, cost, size, and rated current. For most applications a 22μH is the recommended inductor value. It is usually a good balance between these considerations. Larger inductance values reduce the peak-to-peak ripple current, affecting efficiency. This has the effect of reducing both the DC losses and the transition losses. There is also a secondary effect of an inductor's DC resistance (DCR). The DCR of an inductor will be higher for more inductance in the same package size. This is due to the longer windings required for an increase in inductance. Since the majority of input current (minus the MIC2297 operating current) is passed through the inductor, higher DCR inductors will reduce efficiency. To maintain stability, increasing inductor size will have to be met with an increase in output capacitance. This is due to the unavoidable "right half plane zero" effect for the continuous current boost converter topology. The frequency at which the right half plane zero occurs can be calculated as follows:

$$f_{rhpz} = \frac{V_{in}^2}{V_{out} \cdot L \cdot I_{out} \cdot 2\pi}$$

The right half plane zero has the undesirable effect of increasing gain, while decreasing phase. This requires that the loop gain is rolled off before this has significant effect on the total loop response. This can be accomplished by either reducing inductance (increasing RHPZ frequency) or increasing the output capacitor value (decreasing loop gain).

Output Capacitor

Output capacitor selection is also a trade-off between performance, size, and cost. Increasing output capacitance will lead to an improved transient response, but also an increase in size and cost. X5R or X7R dielectric ceramic capacitors are recommended for designs with the MIC2297.

The output capacitor sets the frequency of the pole and zero in the power stage. The zero is given by:

$$f_z = \frac{1}{C \cdot R_{esr} \cdot 2\pi}$$

For ceramic capacitors, the ESR is very small. This puts the zero at a very high frequency where it can be ignored.

The frequency of the pole caused by the output capacitor is given by.

$$f_p = \frac{I_{out}}{C \cdot V_{out} \cdot \pi}$$

Reference Capacitor

A 1uF ceramic should be used on the reference pin to prevent noise from getting into this node. A 1uF ceramic is needed when a PWM signal is connected to the BRT pin.

Diode Selection

The MIC2297 requires an external diode for operation. A Schottky diode is recommended for most applications due to their lower forward voltage drop and reverse recovery time. Ensure the diode selected can deliver the peak inductor current and the maximum reverse voltage is rated greater than the output voltage.

Input capacitor

A minimum 1□F ceramic capacitor with an X5R or X7R dielectric is recommended for designing with the MIC2297. Increasing input capacitance will improve performance and greater noise immunity on the source. The input capacitor should be as close as possible to the inductor and the MIC2297, with short traces for good noise performance.

The MIC2297 utilizes a feedback pin to compare the LED current to an internal reference. The LED current is adjusted by selecting the appropriate feedback resistor value. The desired output current can be calculated as follows:

$$I_{LED} = \frac{0.2V}{R}$$

Compensation

The comp pin is connected to the output of the voltage error amplifier. The voltage error amplifier is a transconductance amplifier. Adding a series RC to ground adds a zero at:

$$f_{zero} = \frac{1}{2\pi R_1 C_1}$$

The resistor typically ranges from 10kOhm to 50kOhm. The capacitor typically ranges from 1nF to 100nF.

Adding a capacitor from comp to ground adds a pole at

$$f_{pole} = \frac{1}{2\pi R_1 C_2}$$

This capacitor typically ranges from 100pF to 10nF. Generally an RC to ground is all that is needed. The RC should be placed as close as possible to the comp pin. The capacitor should be a ceramic with a X5R, X7R, or COG dielectric.

Grounding

Both the AGND and PGND must be connected to the exposed backside pad. The exposed backside pad also improves thermal performance. A large ground plane decreases thermal resistance to ambient air.

Package Information

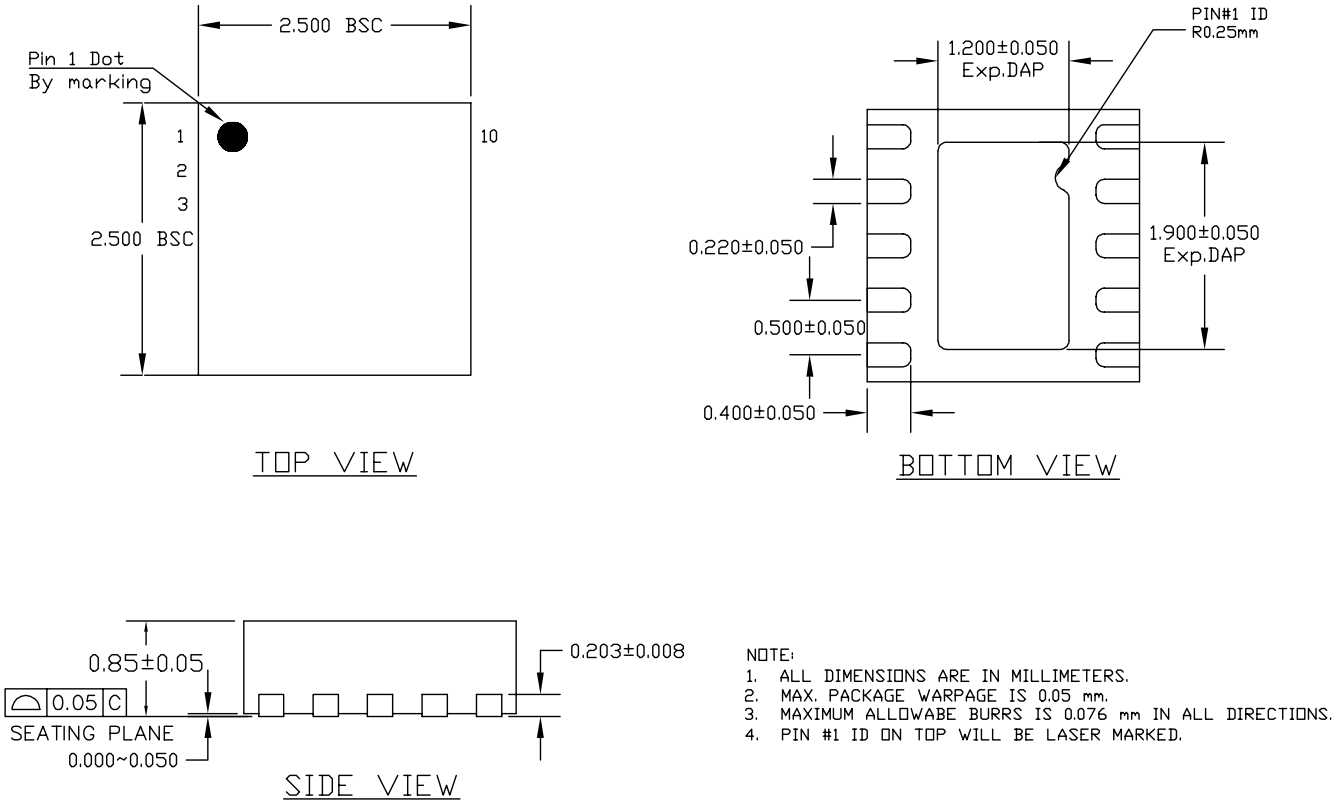

10-Pin Package MLF® (ML)

MICREL, INC. 2180 FORTUNE DRIVE SAN JOSE, CA 95131 USA
TEL +1 (408) 944-0800 FAX +1 (408) 474-1000 WEB http:/www.micrel.com

The information furnished by Micrel in this data sheet is believed to be accurate and reliable. However, no responsibility is assumed by Micrel for its use. Micrel reserves the right to change circuitry and specifications at any time without notification to the customer.

Micrel Products are not designed or authorized for use as components in life support appliances, devices or systems where malfunction of a product can reasonably be expected to result in personal injury. Life support devices or systems are devices or systems that (a) are intended for surgical implant into the body or (b) support or sustain life, and whose failure to perform can be reasonably expected to result in a significant injury to the user. A Purchaser's use or sale of Micrel Products for use in life support appliances, devices or systems is a Purchaser's own risk and Purchaser agrees to fully indemnify Micrel for any damages resulting from such use or sale.

© 2005 Micrel, Incorporated.

Looking for pricing, stock, or lifecycle information?

Click below to explore more details on WIN SOURCE:

- View MIC2297-42YML-TR on WIN SOURCE
- Microchip Technology Information

Optimize Your Supply Chain with WIN SOURCE Solutions

- Global Sourcing Solution
- Obsolete Management
- Cost Control Management
- Shortage Management
- Alternative Solution
- Excess Inventory Management