THE DATASHEET OF

MGA-635T6-TR1G

www.win-source.net 0086-755-83957316

MGA-635T6

GPS Low Noise Amplifier with Variable Bias Current and Shutdown Function

Data Sheet

Description

Avago Technologies' MGA-635T6 is a LNA designed for GPS/ISM/Wimax applications in the (0.9-2.4)GHz frequency range. The LNA uses Avago Technologies's proprietary GaAs Enhancement-mode pHEMT process to achieve high gain operation with very low noise figures and high linearity. Noise figure distribution is very tightly controlled. Gain and supply current are guaranteed parameters. A CMOS compatible shutdown pin is included to turn the LNA off and provide a variable bias.

The MGA-635T6 LNA is useable down to 1V operation. It achieves low noise figures and high gain even at 1V, making it suitable for use in critical low power GPS/ISM band applications.

Component Image

Surface Mount 2.0x1.3x0.4 mm^3 6-lead UTSLP

Top View

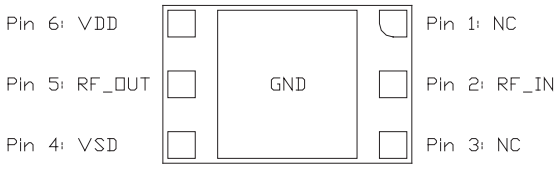

Bottom View

Note:
Package marking provides orientation and identification
"3F" = Product Code
"Y" = Year of manufacture
"M" = Month of manufacture

Attention: Observe precautions for handling electrostatic sensitive devices.
ESD Machine Model = 40 V
ESD Human Body Model = 250 V
Refer to Avago Technologies Application Note A004R: Electrostatic Discharge, Damage and Control.

Features

- Low Noise Figure : 0.74dB
- High Gain : 14.5dB
- High linearity and P1dB
- GaAs E-pHEMT Technology
- Low component count
- Wide Supply Voltage : 1V to 3.6V
- Shutdown current : < 0.1uA
- CMOS compatible shutdown pin (VSD) current @ 2.85V : 60uA
- Adjustable bias current via one single external resistor/voltage
- Shutdown function
- Small Footprint: 2 x 1.3mm^2
- Low Profile : 0.4 mm
- Ext matching for non-GPS freq band operation

Specifications

At 1.575GHz, 2.85V 6.3mA (Typ)
Gain = 14.5 dB (Typ)
NF = 0.74 dB (Typ)
IIP3 = 3.5 dBm (Typ)
IP1dB = 2.5 dBm (Typ)
S11 = -8 dB (Typ)
S22 = -10.4 dB (Typ)

At 1.575GHz, 2.85V 8mA (Typ)
Gain = 15.7 dB (Typ)
NF = 0.8 dB (Typ)
IIP3 = 3.5 dBm (Typ)
IP1dB = 1 dBm (Typ)
S11 = -11.8 dB (Typ)
S22 = -9.3 dB (Typ)

Applications

- GPS, ISM & WiMax Bands LNA

Absolute Maximum Rating [1] T_A=25°C

Thermal Resistance [3] (Vdd = 2.85V, Ids = 4.9mA), θjc = 73 °C/W

Symbol	Parameter	Units	Absolute Max.
Vdd	Device Drain to Source Voltage [2]	V	3.6
Ids	Drain Current [2]	mA	15
$P_{in,max}$	CW RF Input Power (Vdd = 2.85V, Ids=4.9mA)	dBm	+10
P_{diss}	Total Power Dissipation [4]	mW	54
T_j	Junction Temperature	°C	150
T_{STG}	Storage Temperature	°C	-65 to 150

Notes:

1. Operation of this device in excess of any of these limits may cause permanent damage.
2. Assuming DC quiescent conditions
3. Thermal resistance measured using Infra-Red measurement technique.
4. Board (module belly) temperature TB is 25 °C. Derate 14mW/ °C for TB>146 °C.

Electrical Specifications

TA = 25 °C, DC bias for RF parameters is Vdd = Vsd = +2.85V , measured on demo board (see Fig. 4) unless otherwise specified.

VDD= VSD = +2.85V, R1 = 22K Ohm, Freq=1.575GHz – Typical Performance[7]

Table 1. Performance table at nominal operating conditions

Symbol	Parameter and Test Condition	Units	Min.	Typ	Max.
G	Gain	dB	12.5	14.5	16.3
NF	Noise Figure	dB	-	0.74	1.3
IP1dB	Input 1dB Compressed Power	dBm		2.5	
IIP3[8]	Input 3rd Order Intercept Point (2-tone @ Fc +/- 2.5MHz)	dBm		3.5	
S11	Input Return Loss	dB		-8	
S22	Output Return Loss	dB		- 10.4	
Ids	Supply Current	mA		6.3	10
Ish	Shutdown Current @ VSD = 0V	uA		0.1	
Vds	Supply Voltage	V		2.85	
$IP1dB_{1710M}$	Out of Band IP1dB (DCS 1710MHz) blocking	dBm		4	
$IIP3_{OUT}$	Out of Band IIP3 (DCS 1775MHz & 1950MHz)	dBm		6.5	

VDD = +2V, VDD= +1.5V & VDD= +1.0V, Freq=1.575GHz – Typical Performance (VSD=VDD, R1=0 Ohm)

Table 2. Typical performance at low operation voltages with R1 (see Fig 4) set to 0 Ohm

Symbol	Parameter and Test Condition	Units	Vdd=2V	Vdd=1.5V	Vdd=1V
G	Gain	dB	16.2	15.5	13.8
NF	Noise Figure	dB	0.7	0.8	0.9
IP1dB	Input 1dB Compressed Power	dBm	-1.8	-3.5	-5.2
IIP3[8]	Input 3rd Order Intercept Point (2-tone @ Fc +/- 2.5MHz)	dBm	7.5	5.3	3.6
S11	Input Return Loss	dB	-10.4	-9	-7.5
S22	Output Return Loss	dB	-14	-13	-11
Ids	Supply Current	mA	15	10	4.5
Ish	Shutdown Current @ VSD = 0V	uA	0.1	0.1	0.1
Vds	Supply Voltage	V	2	1.5	1.0
$IP1dB_{1710M}$	Out of Band IP1dB (DCS 1710MHz) blocking	dBm	-0.5	-2.2	-4
$IIP3_{OUT}$	Out of Band IIP3 (DCS 1775MHz & 1950MHz)	dBm	10.5	8.3	7

Notes:

7. Measurements at 1.575GHz obtained using demo board described in Fig 4.
8. 1.575GHz IIP3 test condition: FRF1 = 1575 MHz, FRF2 = 1577.5 GHz with input power of -20dBm per tone measured at lower side band

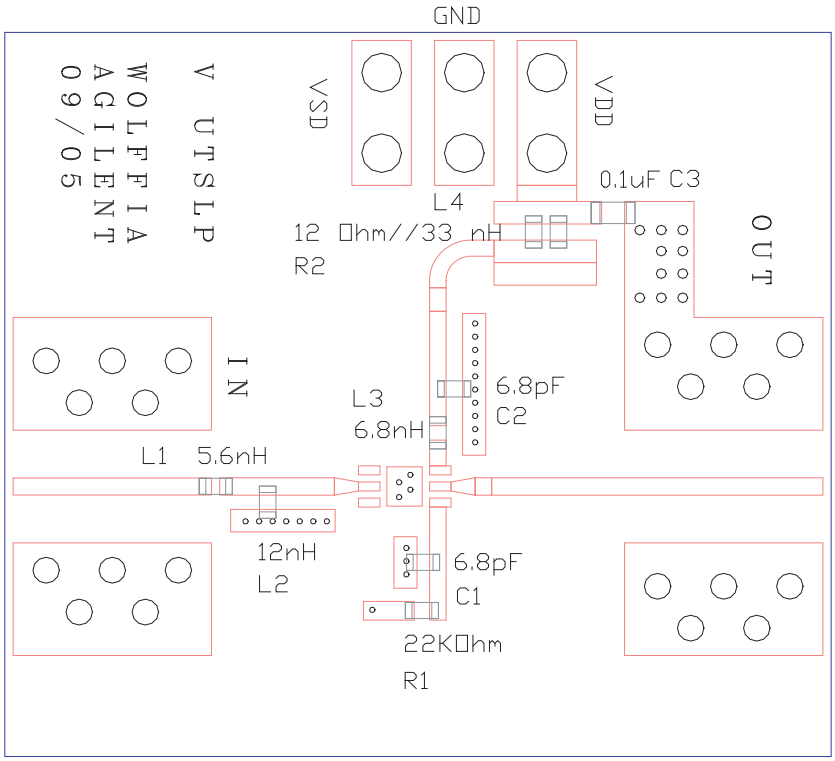

Circuit Symbol	Size	Desciption
L1	0402	5.6 nH Inductor
L2	0402	12 nH Inductor
L3	0402	6.8 nH Inductor
L4	0402	33 nH Inductor
C1, C2	0402	6.8 pF Capacitor
C3	0603	0.1 uF Capacitor
R1	0402	22K Ohm Resistor
R2	0402	12 Ohm Resistor

Figure 1. Demoboard and application circuit components table

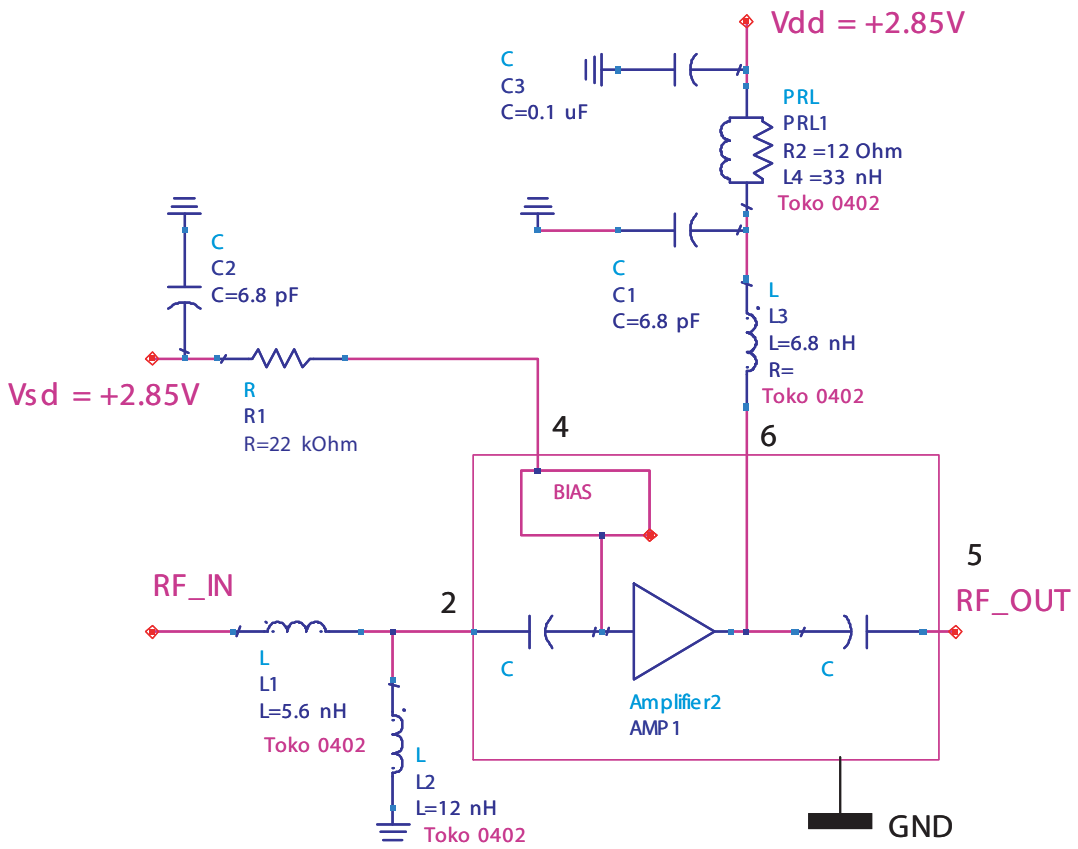

Figure 2. Demoboard schematic diagram

Notes

1. L1 and L2 form the input matching network. The LNA module has a built-in coupling and DC-block capacitor at the input and output. Best noise performance is obtained using high-Q wirewound inductors. This circuit demonstrates that low noise figures are obtainable with standard 0402 chip inductors. Replacing L1, L2 and L3 with high-Q wirewound inductors (eg. Cilcraft 0402CS series) will yield 0.1dB lower NF and 0.2dB higher Gain.
2. L3 is an output matching inductor.
3. C1 is a RF bypass capacitor.
4. PRL1 is a network that isolates the measurement demoboard from external disturbances. C2 and C3 mitigates the effect of external noise pickup on the VSD and VDD lines. These components are not required in actual operation.
5. Bias control is achieved by either varying the VSD voltage without R1 or fixing the VSD voltage to VDD and varying R1. Typical value for R1 is 22k Ohm for 5mA total current at VDD=+2.85V.

MGA-635T6 Typical Performance Curves, Vdd=Vsd=+2.85V, R1=22KOhm measured on demoboard (see Fig.4) at 1.575GHz (At 25°C unless specified otherwise)

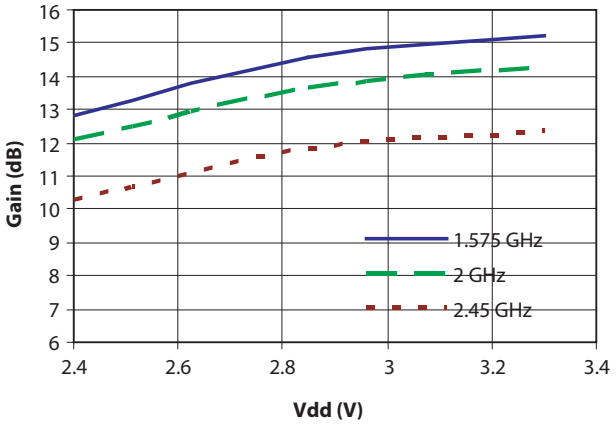

Figure 3. Gain vs Vdd vs Freq

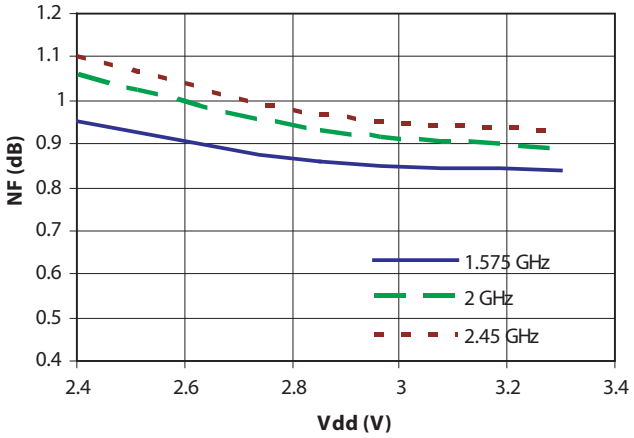

Figure 4. NF vs Vdd vs Freq

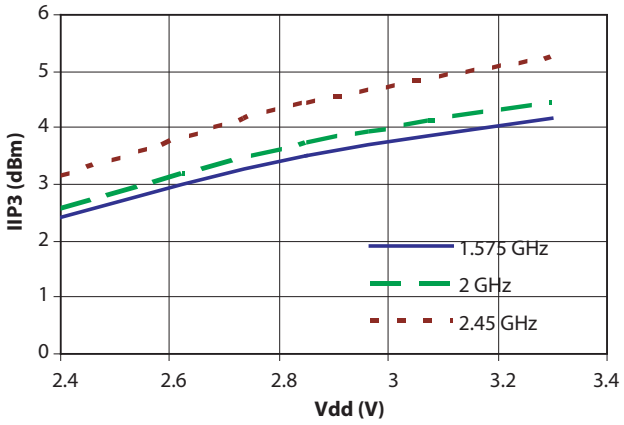

Figure 5. IIP3 vs Vdd vs Freq

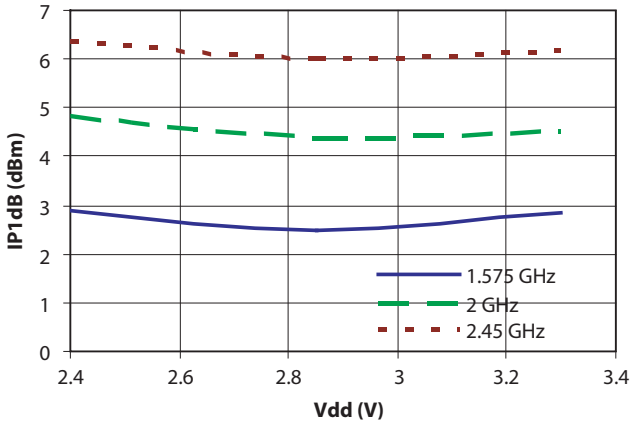

Figure 6. IP1dB vs Vdd vs Freq

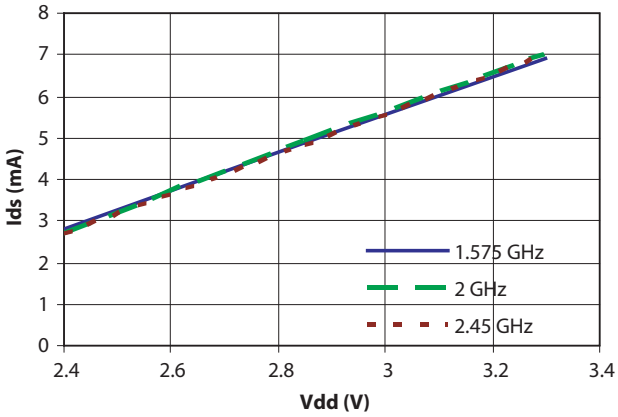

Figure 7. Ids vs Vdd vs Freq

MGA-635T6 Typical Performance Curves, Vdd=Vsd=+2.85V, R1=22KOhm measured on demoboard (see Fig.4) (At 25°C unless specified otherwise)

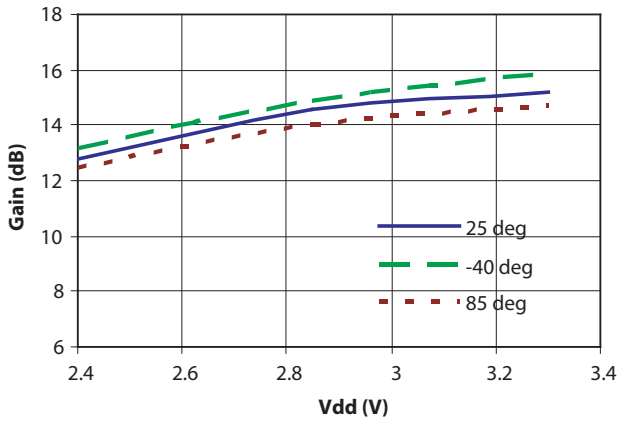

Figure 8. Gain vs Vdd vs Temp

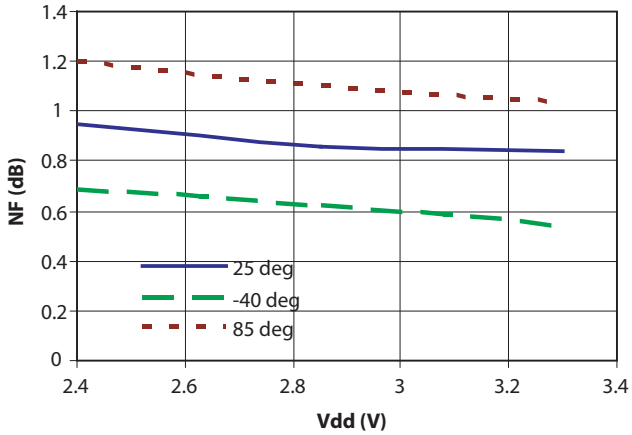

Figure 9. NF vs Vdd vs Temp

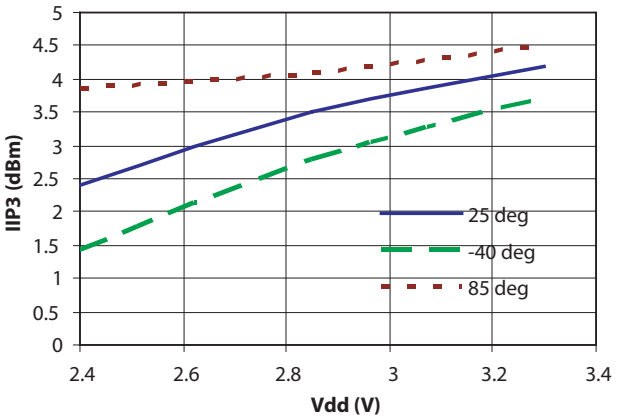

Figure 10. IIP3 vs Vdd vs Temp

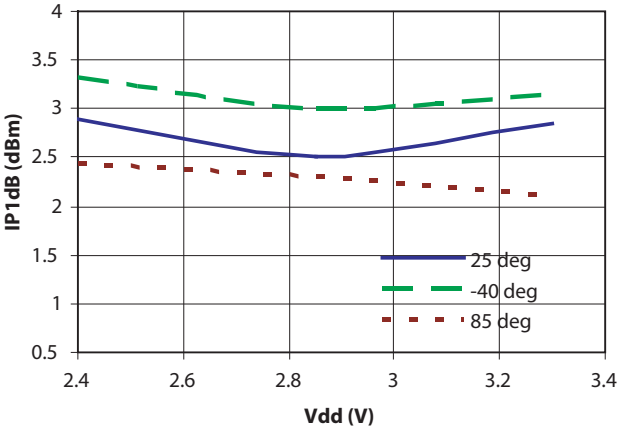

Figure 11. IP1dB vs Vdd vs Temp

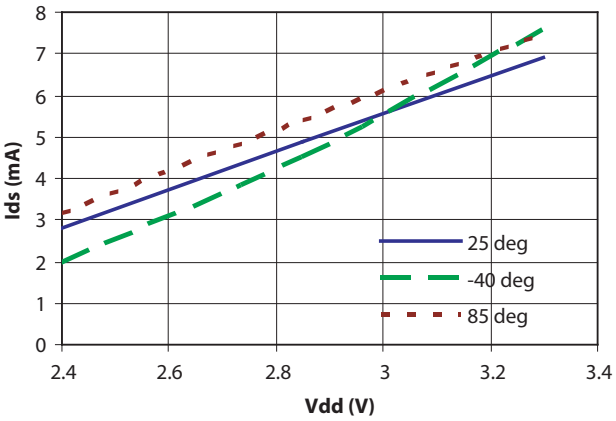

Figure 12. Ids vs Vdd vs Temp

Package Dimensions

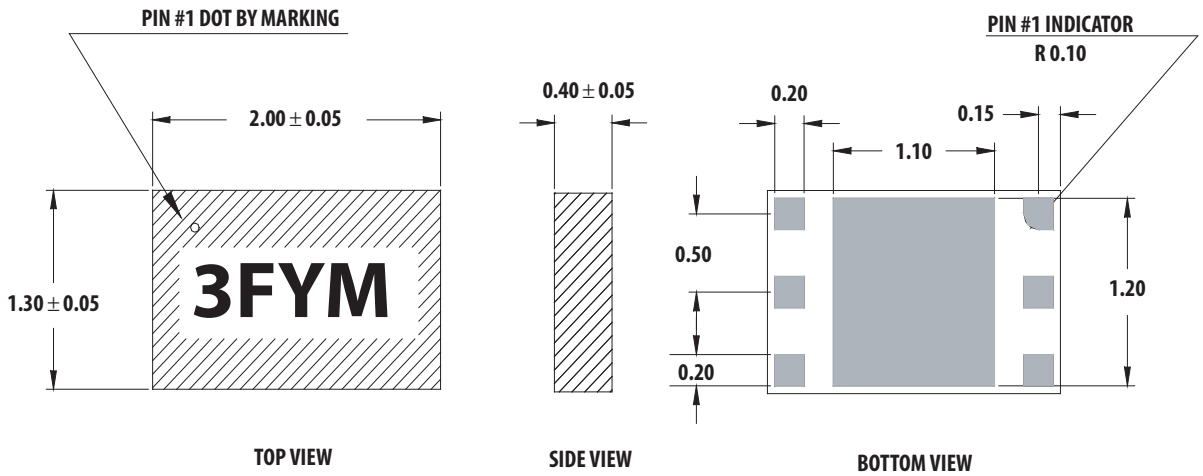

PCB Land Pattern

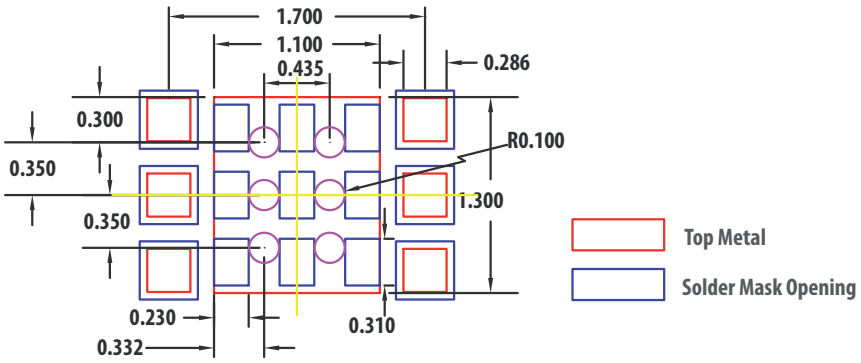

Land Pattern With Via

Stencil Outline Drawing and Combined Land Pattern & Stencil Layout

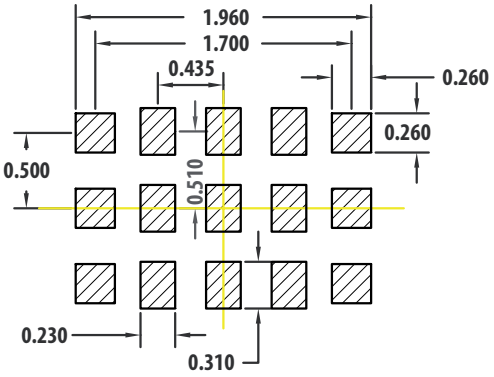

Stencil Opening

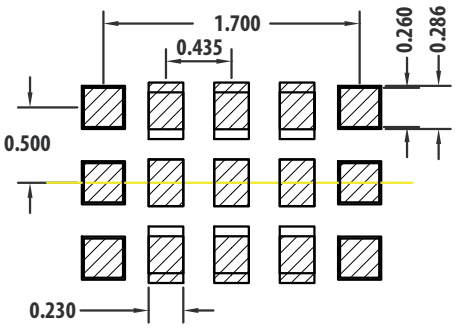

Combined Land Pattern & Stencil Opening

Notes:

1. All dimension are in MM
2. Via hole is optional.
3. Recommend to use standard 4 mils Stencil thickness

Device Orientation

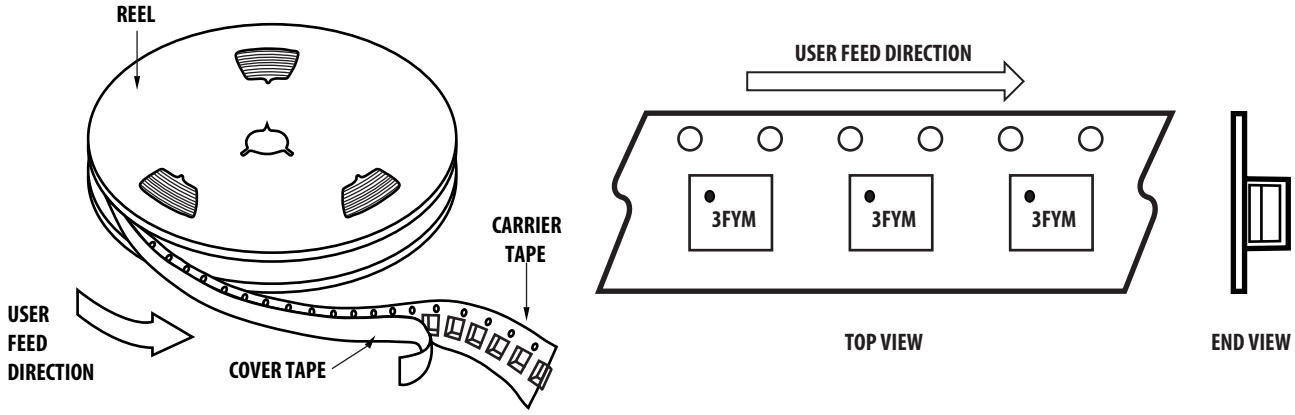

Tape Dimensions

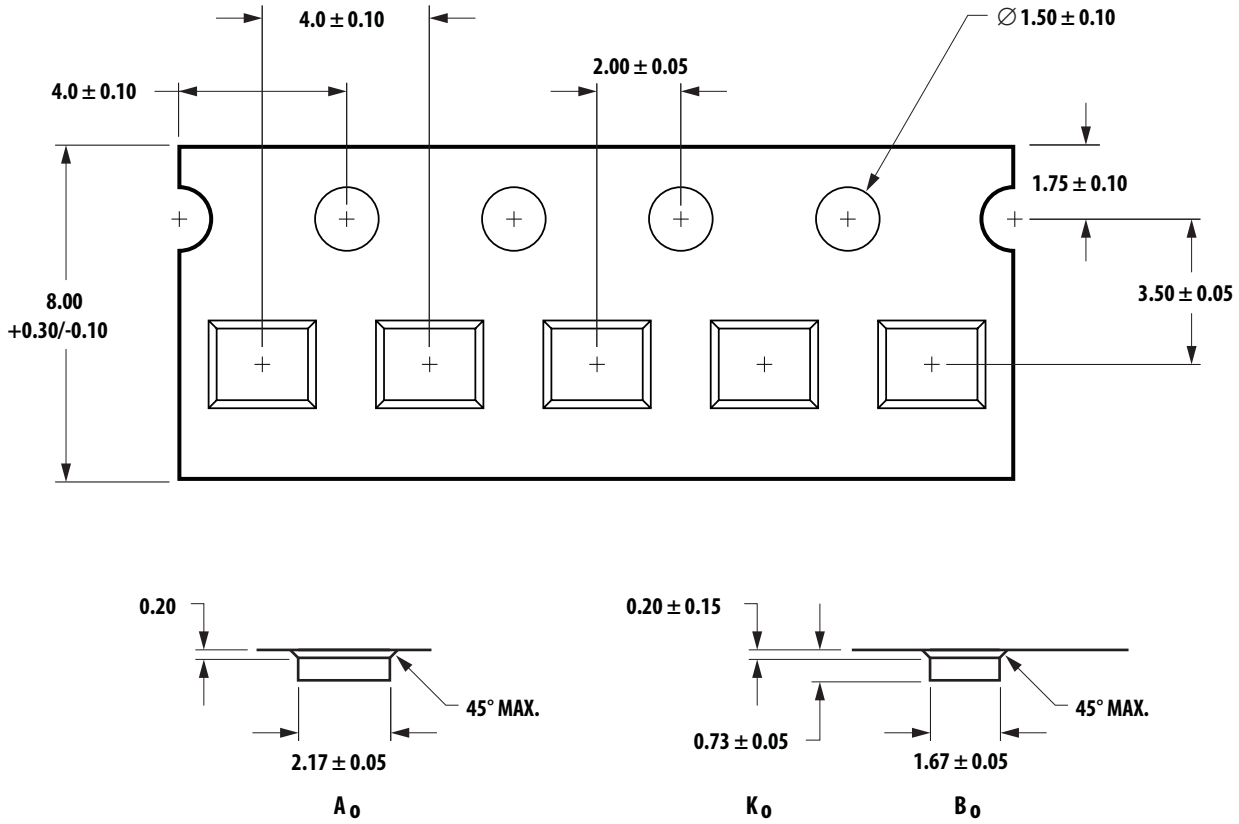

Part Number Ordering Information

Part Number	No. of Devices	Container
MGA-635T6-BLKG	100	Antistatic bag
MGA-635T6-TR1G	3000	7″ Reel
MGA-635T6-TR2G	10000	13″ Reel

Reel Dimensions

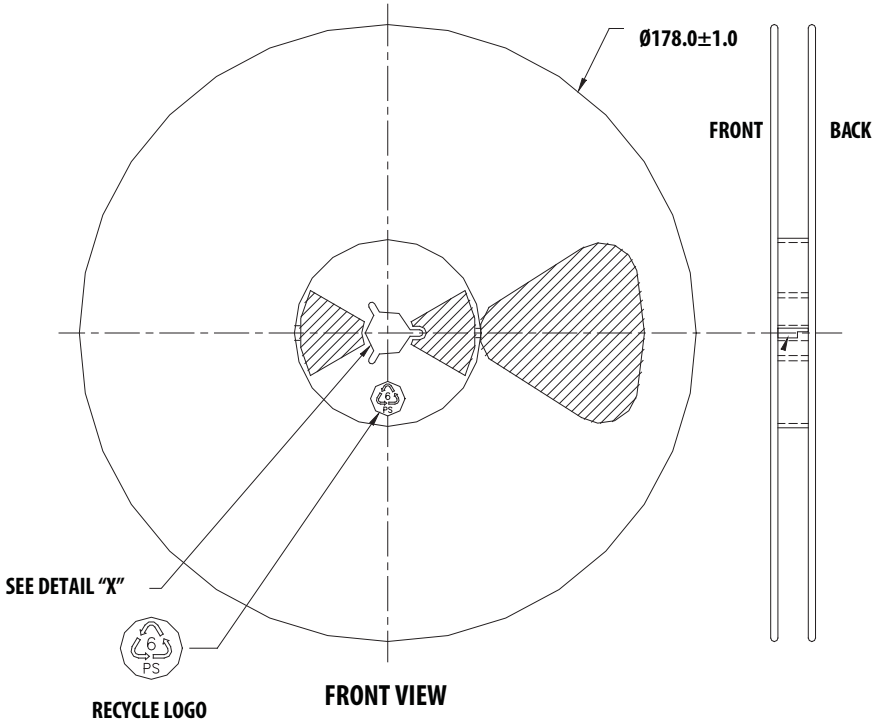

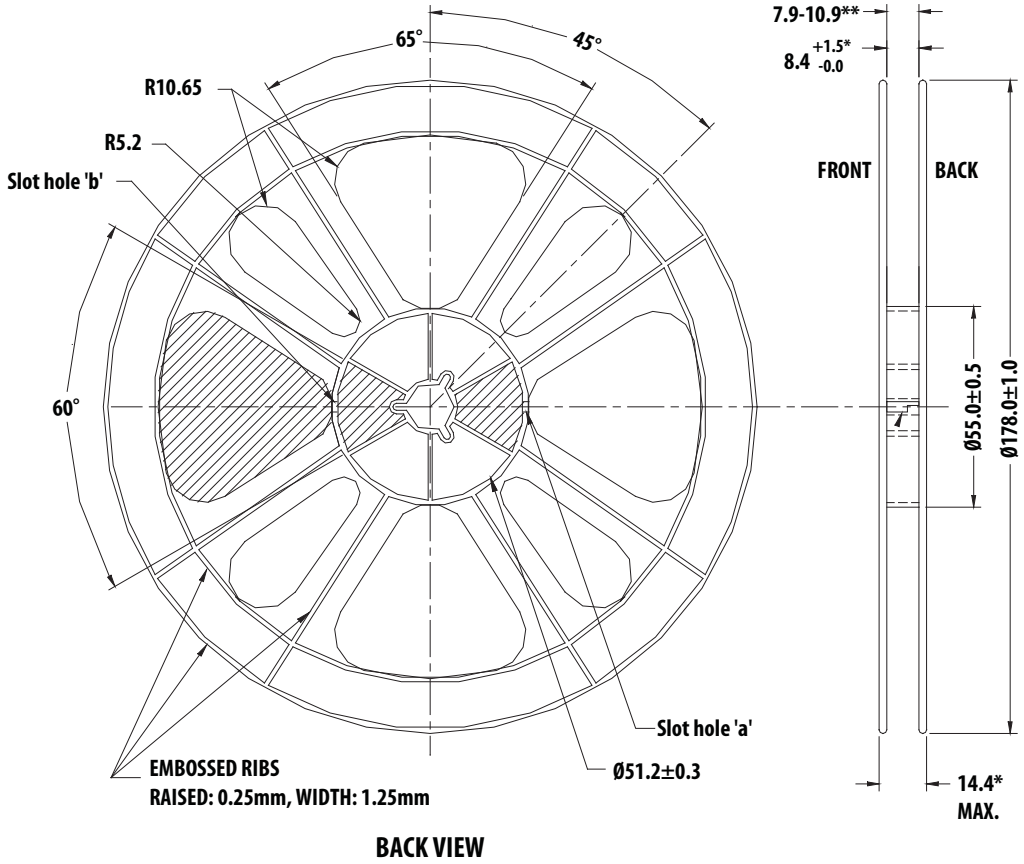

For product information and a complete list of distributors, please go to our web site: **www.avagotech.com**

Avago, Avago Technologies, and the A logo are trademarks of Avago Technologies in the United States and other countries.
Data subject to change. Copyright © 2005-2012 Avago Technologies. All rights reserved. Obsoletes AV01-0188EN
AV02-0215EN - March 2, 2012

Looking for pricing, stock, or lifecycle information?

Click below to explore more details on WIN SOURCE:

- View MGA-635T6-TR1G on WIN SOURCE
- Broadcom Limited Information

Optimize Your Supply Chain with WIN SOURCE Solutions

- Global Sourcing Solution
- Obsolete Management
- Cost Control Management
- Shortage Management
- Alternative Solution
- Excess Inventory Management