THE DATASHEET OF

MAX846AEEE-T

www.win-source.net 0086-755-83957316

19-1121; Rev 0; 9/96

EVALUATION KIT AVAILABLE

Cost-Saving Multichemistry Battery-Charger System

MAX846A

General Description

The MAX846A is a cost-saving multichemistry battery-charger system that comes in a space-saving 16-pin QSOP. This integrated system allows different battery chemistries (Li-Ion, NiMH or NiCd cells) to be charged using one circuit.

In its simplest application, the MAX846A is a stand-alone, current-limited float voltage source that charges Li-Ion cells. It can also be paired up with a low-cost microcontroller (µC) to build a universal charger capable of charging Li-Ion, NiMH, and NiCd cells.

An internal 0.5%-accurate reference allows safe charging of Li-Ion cells that require tight voltage accuracy. The voltage- and current-regulation loops used to control a low-cost external PNP transistor (or P-channel MOSFET) are independent of each other, allowing more flexibility in the charging algorithms.

The MAX846A has a built-in 1%, 3.3V, 20mA linear regulator capable of powering the µC and providing a reference for the µC's analog-to-digital converters. An on-board reset notifies the controller upon any unexpected loss of power. The µC can be inexpensive, since its only functions are to monitor the voltage and current and to change the charging algorithms.

Applications

Li-Ion Battery Packs

Desktop Cradle Chargers

Li-Ion/NiMH/NiCd Multichemistry Battery Chargers

Cellular Phones

Notebook Computers

Hand-Held Instruments

Pin Configuration

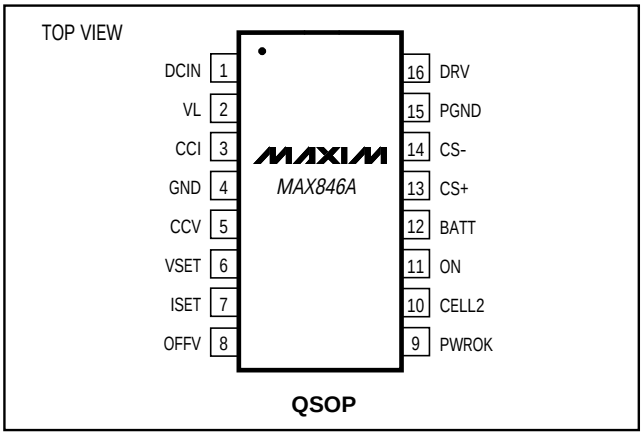

Features

- ♦ **Multichemistry Charger System (Li-Ion, NiMH, NiCd)**
- ♦ **Independent Voltage and Current Loops**
- ♦ **±0.5% Internal Reference for Li-Ion Cells**
- ♦ **Lowers Cost:**
  - **—Stands Alone or Uses Low-Cost µC**
  - **—Built-In 1% Linear Regulator Powers µC**
  - **—Linear Regulator Provides Reference to µC ADCs**
  - **—Built-In µC Reset**
  - **—Controls Low-Cost External PNP Transistor or P-Channel MOSFET**
- ♦ **Space-Saving 16-Pin QSOP**
- ♦ **Charging-Current-Monitor Output**
- ♦ **<1µA Battery Drain when Off**

Ordering Information

PART	TEMP. RANGE	PIN-PACKAGE
MAX846AC/D	0°C to +70°C	Dice*
MAX846AEEE	-40°C to +85°C	16 QSOP

Dice are tested at T_A = +25°C only. Contact factory for details.

Typical Operating Circuit

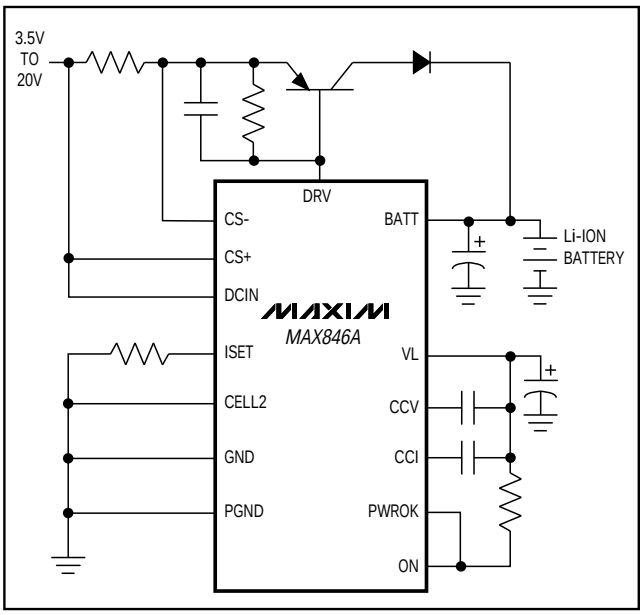

For free samples & the latest literature: http://www.maxim-ic.com, or phone 1-800-998-8800

Cost-Saving Multichemistry Battery-Charger System

ABSOLUTE MAXIMUM RATINGS

DCIN, DRV, CS+, CS-, BATT to GND.....-0.3V, +21V
PGND to GND.....±0.3V
VL to GND.....-0.3V, 7V
I_{PWROK}.....10mA
PWROK, ISET, CCI, CCV, OFFV, VSET,
CELL2, ON to GND.....-0.3V, VL + 0.3V
CS+ to CS-.....±0.3V
VL Short to GND.....Continuous
I_{DRV}.....100mA

Continuous Power Dissipation (T_A = +70°C)
QSOP (derate 8.3mW/°C above +70°C).....667mW
Operating Temperature Range
MAX846AEEE.....-40°C to +85°C
Junction Temperature.....+150°C
Storage Temperature Range.....-65°C to +160°C
Lead Temperature (soldering, 10sec).....+300°C

Stresses beyond those listed under "Absolute Maximum Ratings" may cause permanent damage to the device. These are stress ratings only, and functional operation of the device at these or any other conditions beyond those indicated in the operational sections of the specifications is not implied. Exposure to absolute maximum rating conditions for extended periods may affect device reliability.

ELECTRICAL CHARACTERISTICS

(V_{DCIN} = 10V, ON = VL, I_{VL} = I_{VSET} = 0mA, V_{CS-} = V_{CS+} = 10V, V_{BATT} = 4.5V, V_{OFFV} = V_{CELL2} = 0V, T_A = 0°C to +85°C, unless otherwise noted. Typical values are at T_A = +25°C.)

PARAMETER	CONDITIONS	MIN	TYP	MAX	UNITS
VL REGULATOR					
DCIN Supply Current	V_{DCIN} = 20V, I_{DRV} = I_{VL} = 0mA			5	mA
Operating Range		3.7		20.0	V
Output Voltage	0mA < I_{VL} < 20mA, 3.7V < V_{DCIN} < 20V	3.267	3.305	3.333	V
Short-Circuit Current Limit	VL = GND		50		mA
PWROK Trip Level	Rising VL edge, 2% hysteresis	2.9	3.0	3.1	V
VL Undervoltage-Lockout Level		2.5		2.9	V
REFERENCE					
Output Voltage	Measured at VSET, I_{VSET} = 0mA, V_{ON} = 0V	-0.5%	1.650	+0.5%	V
Output Resistance		-2%	20	+2%	kΩ
CURRENT-SENSE AMPLIFIER					
Transconductance	V_{ISET} = 1.7V, V_{CS+} - V_{CS-} = 165mV	0.95	1	1.05	mA/V
Output Offset Current	V_{CS+} = 4V			3	µA
Input Common-Mode Range	Measured at V_{CS-}, V_{CS+} - V_{CS-} = 165mV	2.1		20.0	V
Maximum Differential Input Voltage	V_{CS-} = V_{ISET} = 2.1V, CSA transconductance >0.9mA/V	225			mV
CS- Lockout Voltage	When V_{CS-} is less than this voltage, DRV is disabled.	1.9		2.1	V
CS+, CS- Input Current	V_{CS+} = 20V, V_{CS+} -V_{CS-} = 165mV			250	µA
CS+, CS- Off Input Current	DCIN = VL = ON = GND		0.01	10	µA

ELECTRICAL CHARACTERISTICS (continued)

(V_{DCIN} = 10V, ON = VL, I_{VL} = I_{VSET} = 0mA, V_{CS-} = V_{CS+} = 10V, V_{BATT} = 4.5V, V_{OFFV} = V_{CELL2} = 0V, T_A = 0°C to +85°C, unless otherwise noted. Typical values are at T_A = +25°C.)

PARAMETER	CONDITIONS	MIN	TYP	MAX	UNITS
VOLTAGE LOOP					
Voltage-Loop Set Point	V_{VSET} = 1.650V, V_{CELL2} = 0V, I_{DRV} = 1mA, V_{DRV} = 10V	-0.25%	4.2	+0.25%	V
	V_{VSET} = 1.650V, V_{CELL2} = VL, I_{DRV} = 1mA, V_{DRV} = 10V	-0.25%	8.4	+0.25%	
VSET Common-Mode Input Range		1.25		2.0	V
CCV Output Impedance			150		kΩ
Voltage-Loop Load Regulation	1mA < I_{DRV} < 5mA		0.05		%
BATT Input Current	V_{BATT} = 10V, CELL2 = GND or VL			225	µA
BATT Off Input Current	V_{BATT} = 10V, ON = GND, CELL2 = GND or VL		0.01	1	µA
CURRENT LOOP					
Current-Loop Set Point	I_{DRV} = 5mA, V_{DRV} = 10V	1.634	1.650	1.666	V
CA Voltage Gain			5		V/V
CCI Output Impedance			50		kΩ
Overcurrent Trip Level	When V_{ISET} exceeds this voltage, DRV current is disabled.	1.90		2.1	V
DRIVER					
DRV Sink Current	V_{DRV} = 3V	20			mA
DRV Off Current	V_{DRV} = 20V, V_{ON} = 0V		0.1	100	µA
LOGIC INPUTS AND OUTPUTS					
Input High Level	CELL2, ON, OFFV	2.4		VL	V
Input Low Level	CELL2, ON, OFFV	0		0.8	V
Input Current	CELL2, ON, OFFV		0.01	1	µA
PWROK Output Low Level	I_{PWROK} = 1mA, V_{DCIN} = V_{VL} = 2.5V			0.4	V
PWROK Output High Leakage	V_{PWROK} = 3.3V		0.01	1	µA

Cost-Saving Multichemistry Battery-Charger System

ELECTRICAL CHARACTERISTICS (Note 1)

(V_{DCIN} = 10V, ON = VL, I_{VL} = I_{VSET} = 0mA, V_{CS-} = V_{CS+} = 10V, V_{BATT} = 4.5V, V_{OFFV} = V_{CELL2} = 0V, T_A = -40°C to +85°C, unless otherwise noted.)

PARAMETER	CONDITIONS	MIN	TYP	MAX	UNITS
VL REGULATOR					
DCIN Supply Current	V_{DCIN} = 20V, I_{DRV} = I_{VL} = 0mA			5	mA
Output Voltage	0mA < I_{VL} < 20mA, 3.7V < V_{DCIN} < 20V	3.259		3.341	V
PWROK Trip Level	Rising VL edge, 2% hysteresis	2.9		3.1	V
VL Undervoltage-Lockout Level		2.5		3.0	V
REFERENCE					
Output Voltage	Measured at VSET, I_{VSET} = 0mA, V_{ON} = 0V	-0.7%	1.650	+0.7%	V
Output Resistance		-2%	20	+2%	kΩ
CURRENT-SENSE AMPLIFIER					
Transconductance	V_{ISET} = 1.7V, V_{CS+} - V_{CS-} = 165mV	0.93		1.07	mA/V
Output Offset Current	V_{CS+} = 4V			5	µA
CS+, CS- Off Input Current	V_{ON} = 0V, V_{CS+} = V_{CS-} = 10V			10	µA
VOLTAGE LOOP					
Voltage-Loop Set Point	V_{VSET} = 1.650V, V_{CELL2} = 0V, I_{DRV} = 1mA, V_{DRV} = 10V	-0.35%	4.2	+0.35%	V
	V_{VSET} = 1.650V, V_{CELL2} = VL, I_{DRV} = 1mA, V_{DRV} = 10V	-0.35%	8.4	+0.35%	
BATT Off Input Current	V_{BATT} = 10V, ON = GND, CELL2 = GND or VL			1	µA
CURRENT LOOP					
Current-Loop Set Point	I_{DRV} = 5mA, V_{DRV} = 10V	1.625		1.675	V
Overcurrent Trip Level	When V_{ISET} exceeds this voltage, DRV current is disabled.	1.86		2.14	V
DRIVER					
DRV Sink Current	V_{DRV} = 3V	20			mA
DRV Off Current	V_{DRV} = 20V, ON = GND			100	µA

Note 1: Specifications to -40°C are guaranteed by design and not production tested.

Typical Operating Characteristics

(T_A = +25°C, unless otherwise noted.)

CURRENT-SENSE AMPLIFIER TRANSCONDUCTANCE vs. ISET VOLTAGE

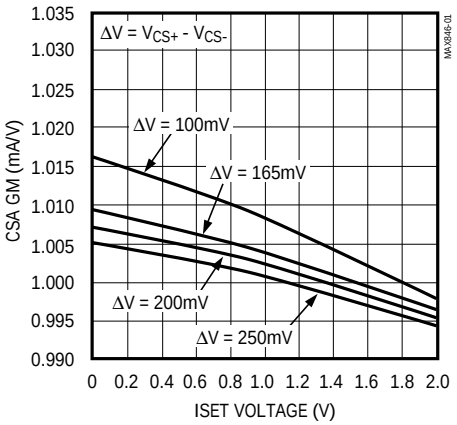

BATTERY INPUT CURRENT vs. BATTERY VOLTAGE

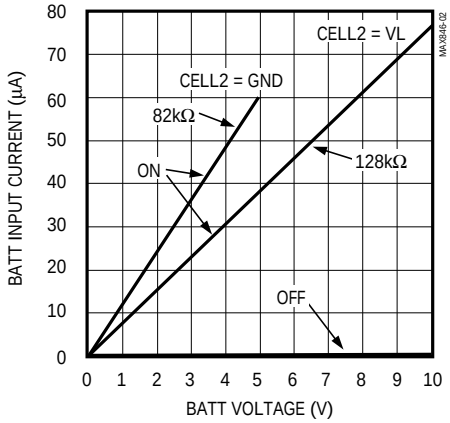

CURRENT-LOOP GAIN

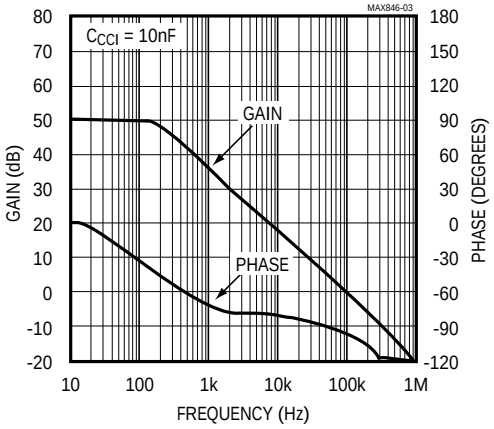

VOLTAGE-LOOP GAIN

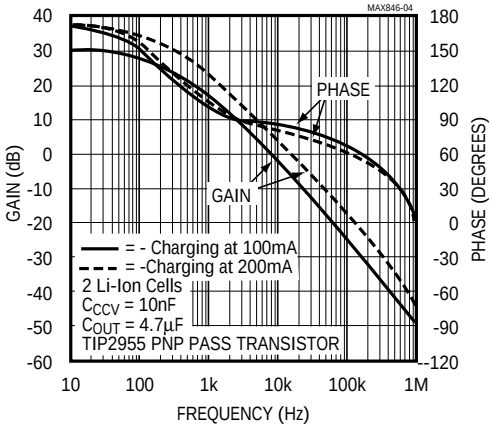

Li-ION CHARGING PROFILE

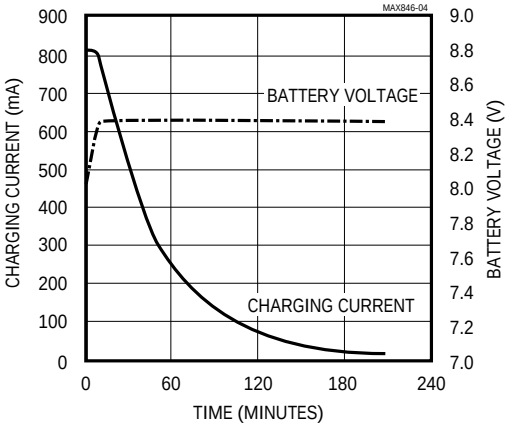

Cost-Saving Multichemistry Battery-Charger System

Pin Description

PIN	NAME	FUNCTION
1	DCIN	Supply Input from External DC Source. 3.7V ≤ V_{DCIN} ≤ 20V.
2	VL	3.3V, 20mA, 1% Linear-Regulator Output. VL powers the system µC and other components. Bypass to GND with a 4.7µF tantalum or ceramic capacitor.
3	CCI	Current-Regulation-Loop Compensation Pin. Connect a compensation capacitor (typically 10nF) from CCI to VL.
4	GND	Ground
5	CCV	Voltage-Regulation-Loop Compensation Pin. Connect a compensation capacitor (typically 10nF) from CCV to VL.
6	VSET	Float-Voltage Reference-Adjust Input. Leave VSET open for a 4.2V default. See the *Applications Information* section for adjustment information.
7	ISET	Current-Set Input/Current-Monitor Output. ISET sets the current-regulation point. Connect a resistor from ISET to GND to monitor the charging current. ISET voltage is regulated at 1.65V by the current-regulation loop. To adjust the current-regulation point, either modify the resistance from ISET to ground or connect a fixed resistor and adjust the voltage on the other side of the resistor (Figure 5). The transconductance of the current-sense amplifier is 1mA/V.
8	OFFV	Logic Input that disables the voltage-regulation loop. Set OFFV high for NiCd or NiMH batteries.
9	PWROK	Open-Drain, Power-Good Output to µC. PWROK is low when VL is less than 3V. The reset timeout period can be set externally using an RC circuit (Figure 3).
10	CELL2	Digital Input. CELL2 programs the number of Li-Ion cells to be charged. A high level equals two cells; a low level equals one cell.
11	ON	Charger ON/OFF Input. When low, the driver section is turned off and I_{BATT} <1µA. The VL regulator is always active.
12	BATT	Battery Input. Connect BATT to positive battery terminal.
13	CS+	Current-Sense Amplifier High-Side Input. Connect CS+ to the sense resistor's power-source side. The sense resistor may be placed on either side of the pass transistor.
14	CS-	Current-Sense Amplifier Low-Side Input. Connect CS- to the sense resistor's battery side.
15	PGND	Power Ground
16	DRV	External Pass Transistor (P-channel MOSFET or PNP) Base/Gate Drive Output. DRV sinks current only.

Detailed Description

The MAX846A battery-charging controller combines three functional blocks: a 3.3V precision, low-dropout linear regulator (LDO), a precision voltage reference, and a voltage/current regulator (Figure 1).

Linear Regulator

The LDO regulator output voltage (VL) is two times the internal reference voltage; therefore, the reference and LDO track. VL delivers up to 20mA to an external load and is short-circuit protected. The power-good output (PWROK) provides microcontroller (µC) reset and charge-current inhibition.

Voltage Reference

The precision internal reference provides a voltage to accurately set the float voltage for lithium-ion (Li-Ion) battery charging. The reference output connects in series with an internal, 2%-accurate, 20kΩ resistor. This allows the float voltage to be adjusted using one external 1% resistor (R_{VSET}) to form a voltage divider (Figure 4). The float-voltage accuracy is important for battery life and to ensure full capacity in Li-Ion batteries. Table 1 shows the accuracies attainable using the MAX846A.

Voltage/Current Regulator

The voltage/current regulator consists of a precision attenuator, voltage loop, current-sense amplifier, and current loop. The attenuator can be pin programmed to set the regulation voltage for one or two Li-Ion cells (4.2V and 8.4V, respectively). The current-sense amplifier is configured to sense the battery current on the high side. It is, in essence, a transconductance amplifier converting the voltage across an external sense resistor (R_{CS}) to a current, and applying this current to an external load resistor (R_{ISET}). Set the charge current by selecting R_{CS} and R_{ISET}. The charge current can also be adjusted by varying the voltage at the low side of R_{ISET} or by summing/subtracting current from the ISET node (Figure 5). The voltage and current loops are individually compensated using external capacitors at CCV and CCI, respectively. The outputs of these two loops are OR'ed together and drive an open-drain, internal N-channel MOSFET transistor sinking current to ground. An external P-channel MOSFET or PNP transistor pass element completes the loop.

Stability

The *Typical Operating Characteristics* show the loop gains for the current loop and voltage loop. The dominant pole for each loop is set by the compensation capacitor connected to each capacitive compensation pin (CCI, CCV). The DC loop gains are about 50dB for the current loop and about 33dB for the voltage loop, for a battery impedance of 250mΩ.

The CCI output impedance (50kΩ) and the CCI capacitor determine the current-loop dominant pole. In Figure 2, the recommended C_{CCV} is 10nF, which places a dominant pole at 300Hz. There is a high-frequency pole, due to the external PNP, at approximately $f_T/ß$. This pole frequency (on the order of a few hundred kilohertz) will vary with the type of PNP used. Connect a 10nF capacitor between the base and emitter of the PNP to prevent self-oscillation (due to the high-impedance base drive).

Similarly, the CCV output impedance (150kΩ) and the CCV capacitor set the voltage-loop dominant pole. In Figure 2, the compensation capacitance is 10nF, which places a dominant pole at 200Hz.

The battery impedance directly affects the voltage-loop DC and high-frequency gain. At DC, the loop gain is proportional to the battery resistance. At higher frequencies, the AC impedance of the battery and its connections introduces an additional high-frequency zero. A 4.7µF output capacitor in parallel with the battery, mounted close to BATT, minimizes the impact of this impedance. The effect of the battery impedance on DC gain is noticeable in the Voltage-Loop-Gain graph (see *Typical Operating Characteristics*). The solid line represents voltage-loop gain versus frequency for a fully charged battery, when the battery energy level is high and the ESR is low. The charging current is 100mA. The dashed line shows the loop gain with a 200mA charging current, a lower amount of stored energy in the battery, and a higher battery ESR.

Applications Information

Stand-Alone Li-Ion Charger

Figure 2 shows the stand-alone configuration of the MAX846A. Select the external components and pin configurations as follows:

- Program the number of cells: Connect CELL2 to GND for one-cell operation, or to VL for two-cell operation.
- Program the float voltage: Connect a 1% resistor from VSET to GND to adjust the float voltage down, or to VL to adjust it up. If VSET is unconnected, the float voltage will be 4.2V per cell. Let the desired float voltage per cell be V_F, and calculate the resistor value as follows:

Table 1. Float-Voltage Accuracy

ERROR SOURCE	ERROR
Internal-reference accuracy	±0.5%
VSET error due to external divider. Calculated from a 2% internal 20kΩ resistor tolerance and a 1% external R_{VSET} resistor tolerance. The total error is 3% x (adjustment). Assume max adjustment range of 5%.	±0.15%
VSET amplifier and divider accuracy	±0.25%
TOTAL	**±0.9%**

Cost-Saving Multichemistry Battery-Charger System

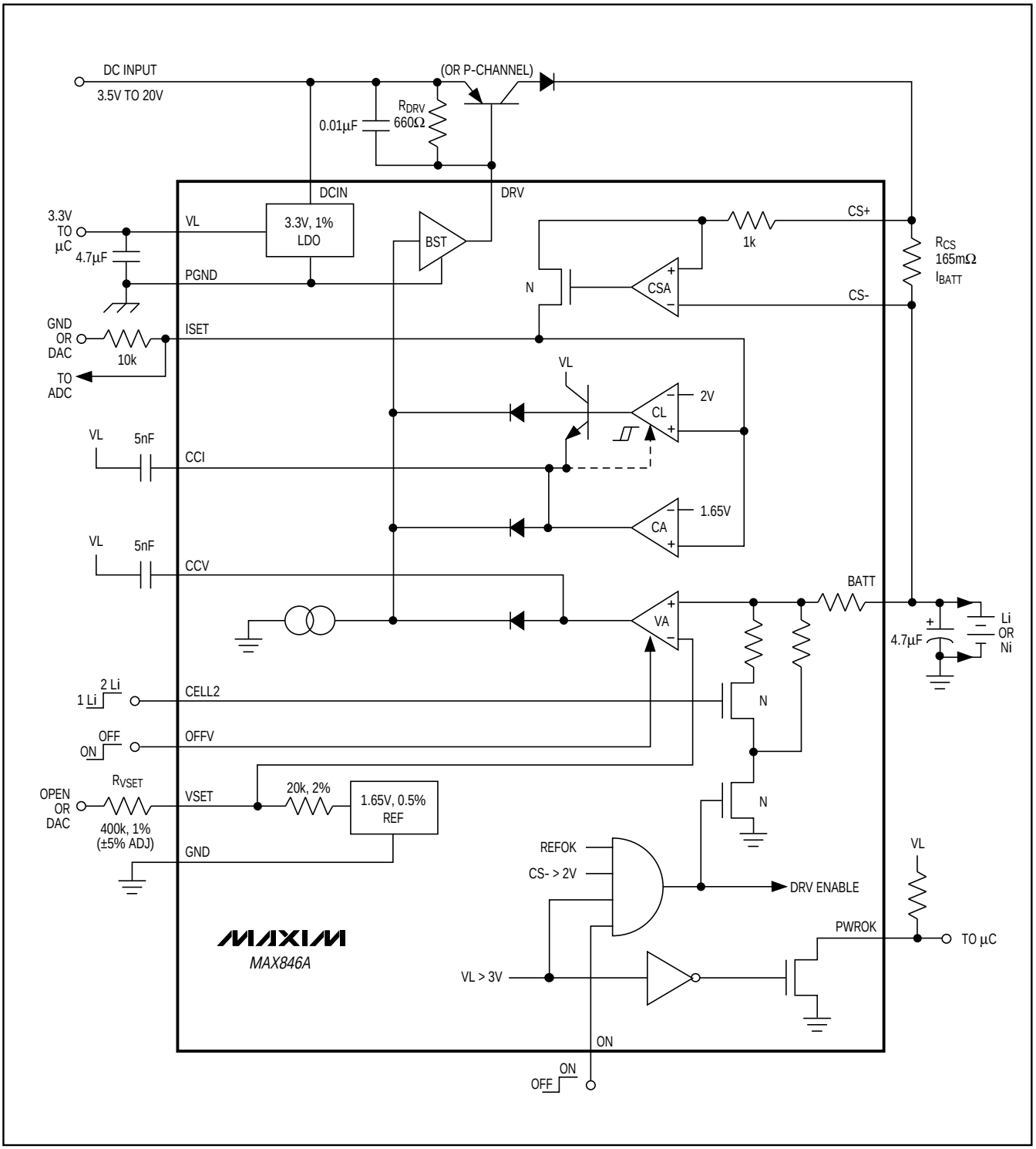

Figure 1. Functional Diagram

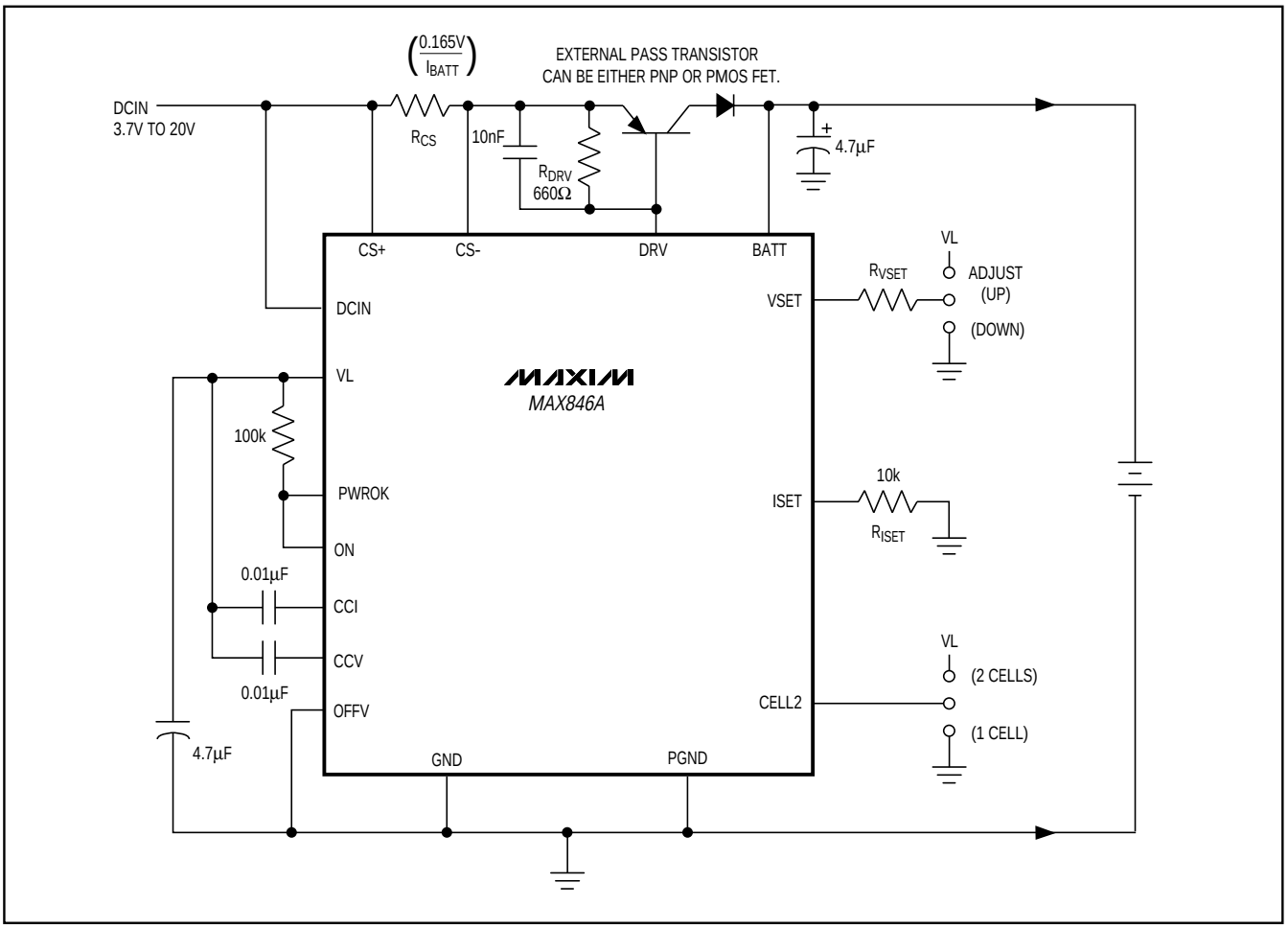

Figure 2. Stand-Alone Li-Ion Charger

$$R_{VSET} = 20k\Omega \left(\frac{\frac{4.2}{1.65} V_X - V_F}{V_F - 4.2} \right)$$

where VX is either GND or VL, and V_F is the per-cell float voltage. In the circuit of Figure 1, R_{VSET} is 400kΩ. R_{VSET} and the internal 20kΩ resistor form a divider, resulting in an adjustment range of approximately ±5%.

The current-regulation loop attempts to maintain the voltage on ISET at 1.65V. Selecting resistor R_{ISET} determines the reflected voltage required at the current-sense amplifier input.

- Calculate R_{CS} and R_{ISET} as follows:

  $R_{CS} = V_{CS} / I_{BATT}$

  R_{ISET} (in kΩ) = 1.65V / V_{CS}

  where the recommended value for V_{CS} is 165mV.
- Connect ON to PWROK to prevent the charge current from turning on until the voltages have settled.

Minimize power dissipation in the external pass transistor. Power dissipation can be controlled by setting the DCIN input supply as low as possible, or by making V_{DCIN} track the battery voltage.

Microprocessor-Controlled Multichemistry Operation

The MAX846A is highly adjustable, allowing for simple interfacing with a low-cost µC to charge Ni-based and Li-Ion batteries using one application circuit (Figure 3).

Cost-Saving Multichemistry Battery-Charger System

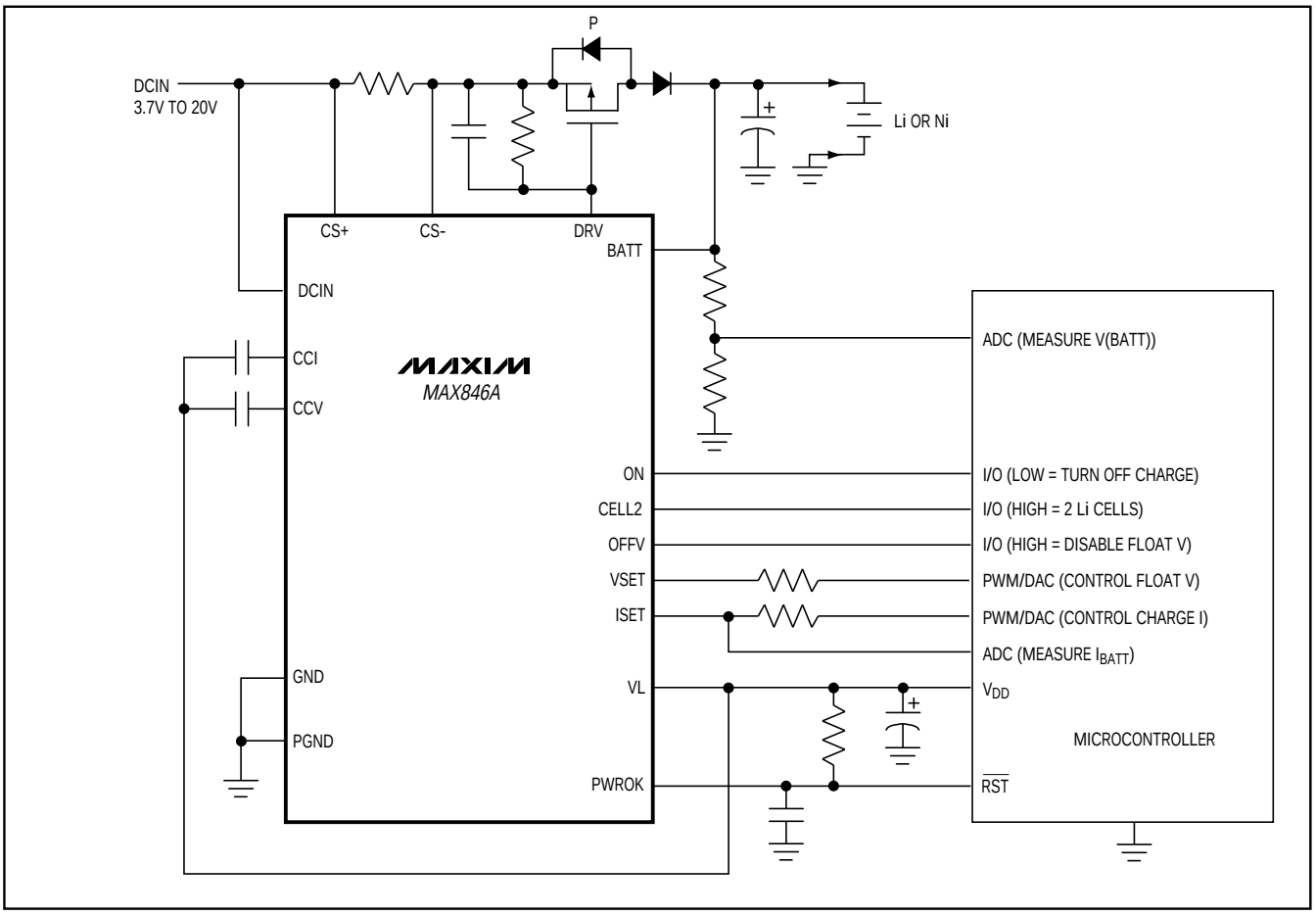

Figure 3. Desktop Multichemistry Charger Concept

Component selection is similar to that of stand-alone operation. By using DACs or µC PWM outputs, the float voltage and charging current can be adjusted by the µC. When a Ni-based battery is being charged, disable the float-voltage regulation using the OFFV input. The µC can also monitor the charge current through the battery by reading the ISET output's voltage using its ADC. Similarly, the battery voltage can be measured using a voltage divider from the battery.

Note that the µC only needs to configure the system for correct voltage and current levels for the battery being charged, and for Ni-based batteries to detect end-of-charge and adjust the current level to trickle. The controller is not burdened with the regulation task.

Float-voltage accuracy is important for battery life and for reaching full capacity for Li-Ion batteries. Table 1 shows the accuracy attainable using the MAX846A.

For best float-voltage accuracy, set the DRV current to 1mA (R_{DRV} = 660Ω for a PNP pass transistor).

High-Power Multichemistry Offline Charger

The circuit in Figure 6 minimizes power dissipation in the pass transistor by providing optical feedback to the input power source. The offline AC/DC converter maintains 1.2V across the PNP. This allows much higher charging currents than can be used with conventional power sources.

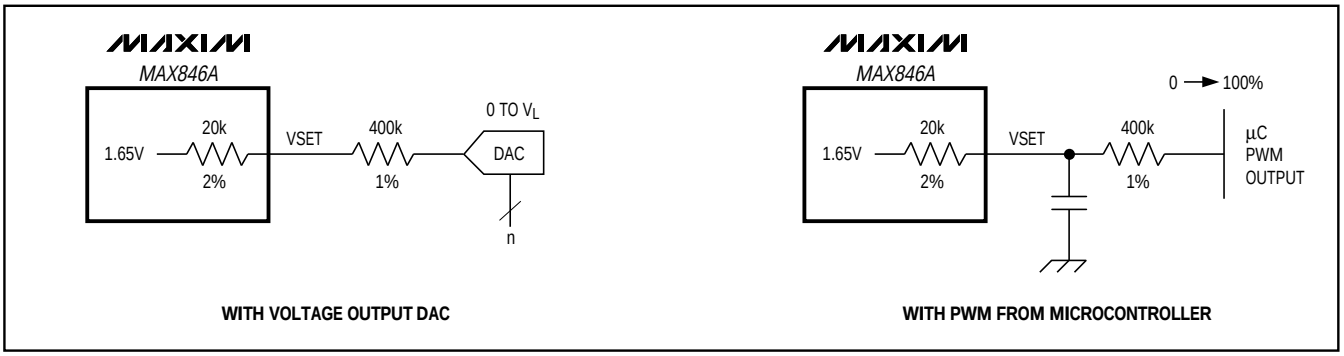

Figure 4. VSET Adjustment Methods

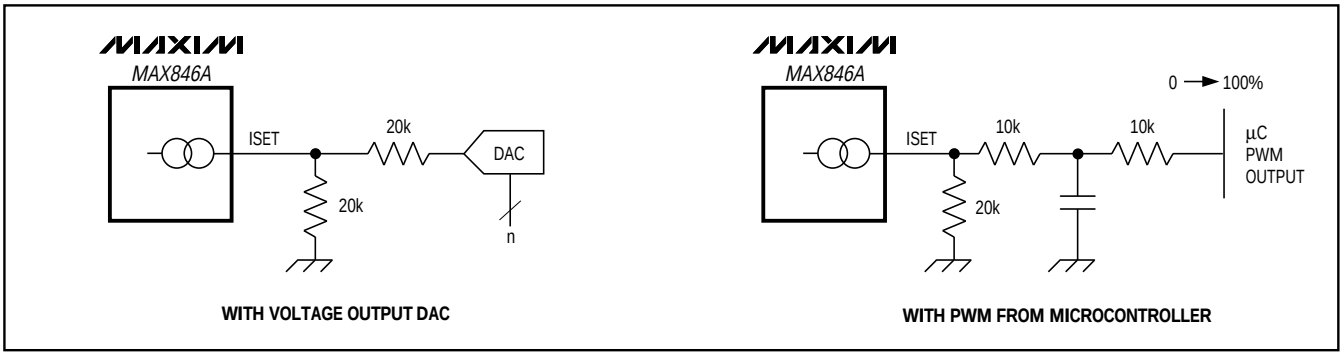

Figure 5. ISET Adjustment Methods

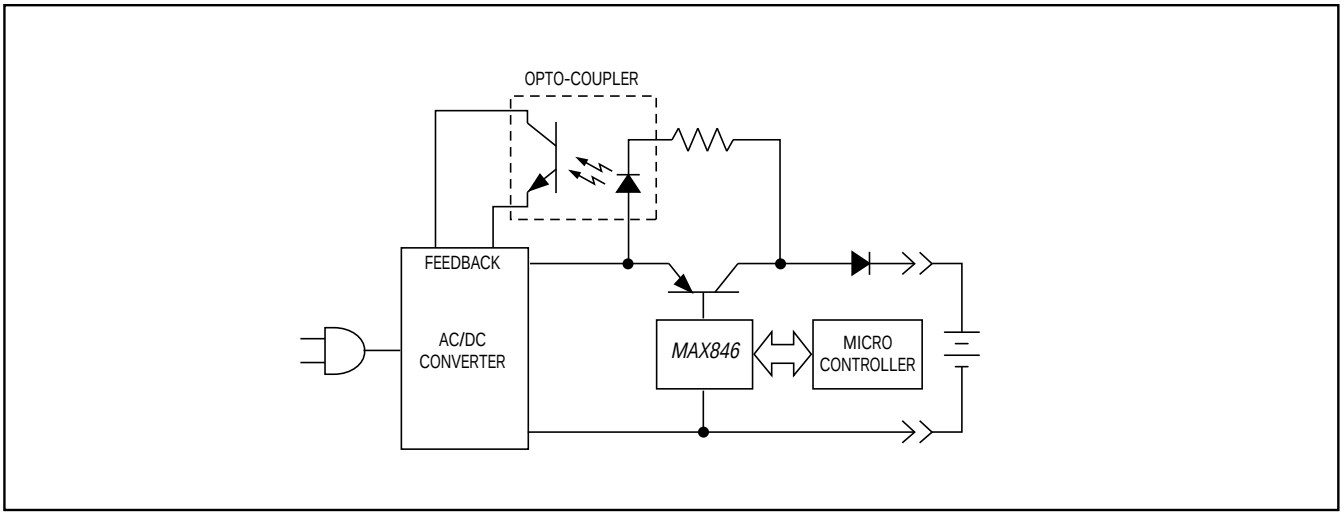

Figure 6. Low-Cost Desktop Multichemistry Charger Concept

Cost-Saving Multichemistry Battery-Charger System

Chip Topography

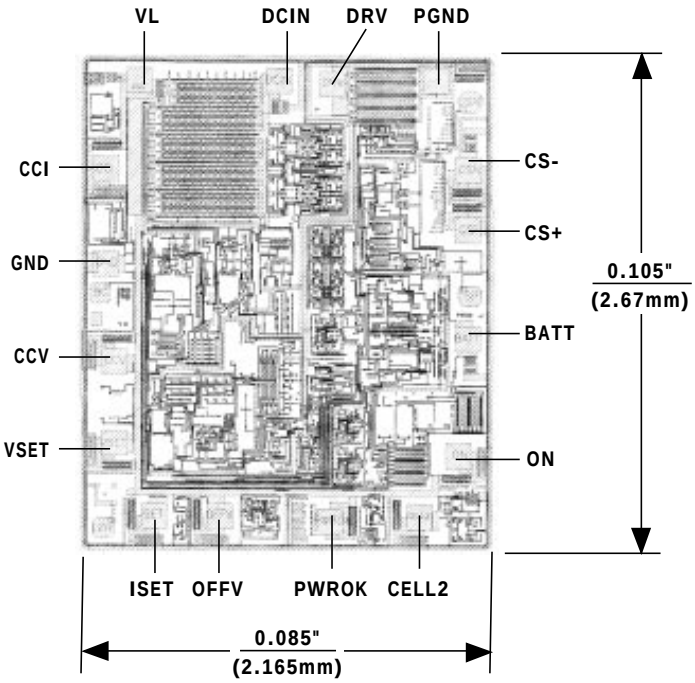

SUBSTRATE CONNECTED TO GND
TRANSISTOR COUNT: 349

Maxim cannot assume responsibility for use of any circuitry other than circuitry entirely embodied in a Maxim product. No circuit patent licenses are implied. Maxim reserves the right to change the circuitry and specifications without notice at any time.

© 1996 Maxim Integrated Products Printed USA MAXIM is a registered trademark of Maxim Integrated Products.

Looking for pricing, stock, or lifecycle information?

Click below to explore more details on WIN SOURCE:

- View MAX846AEEE-T on WIN SOURCE
- Maxim Integrated Information

Optimize Your Supply Chain with WIN SOURCE Solutions

- Global Sourcing Solution
- Obsolete Management
- Cost Control Management
- Shortage Management
- Alternative Solution
- Excess Inventory Management