THE DATASHEET OF

MAX338ESE+T

www.win-source.net 0086-755-83957316

MAX338/MAX339

8-Channel/Dual 4-Channel, Low-Leakage, CMOS Analog Multiplexers

General Description

The MAX338/MAX339 are monolithic, CMOS analog multiplexers (muxes). The 8-channel MAX338 is designed to connect one of eight inputs to a common output by control of a 3-bit binary address. The dual, 4-channel MAX339 is designed to connect one of four inputs to a common output by control of a 2-bit binary address. Both devices can be used as either a mux or a demux. On-resistance is 400Ω max, and the devices conduct current equally well in both directions.

These muxes feature extremely low off leakages (less than 20pA at +25°C), and extremely low on-channel leakages (less than 50pA at +25°C). The new design offers guaranteed low charge injection (1.5pC typ) and electrostatic discharge (ESD) protection greater than 2000V, per method 3015.7. These improved muxes are pin-compatible upgrades for the industry-standard DG508A and DG509A. For similar Maxim devices with lower leakage and charge injection but higher on-resistance, see the MAX328 and MAX329.

The MAX338/MAX339 operate from a single +4.5V to +30V supply or from dual supplies of ±4.5V to ±20V. All control inputs (whether address or enable) are TTL compatible (+0.8V to +2.4V) over the full specified temperature range and over the ±4.5V to ±18V supply range. These parts are fabricated with Maxim's 44V silicon-gate process.

Applications

- Data-Acquisition Systems
- Test Equipment
- Military Radios
- Guidance and Control Systems
- Sample-and-Hold Circuits
- Heads-Up Displays
- Communications Systems
- PBX, PABX

Features

- On-Resistance, <400Ω max
- Transition Time, <500ns
- On-Resistance Match, <10Ω
- NO-Off Leakage Current, <20pA at +25°C
- 1.5pC Charge Injection
- Single-Supply Operation (+4.5V to +30V)
  Bipolar-Supply Operation (±4.5V to ±20V)
- Plug-In Upgrade for Industry-Standard DG508A/DG509A
- Rail-to-Rail Signal Handling
- TTL/CMOS-Logic Compatible
- ESD Protection >2000V, per Method 3015.7

Ordering Information

PART	TEMP RANGE	PIN-PACKAGE
MAX338CEE+	0°C to +70°C	16 QSOP
MAX338CPE+	0°C to +70°C	16 PDIP
MAX338CSE+	0°C to +70°C	16 Narrow SO
MAX338C/D	0°C to +70°C	Dice*
MAX338EEE+	-40°C to +85°C	16 QSOP
MAX338ETE+	-40°C to +85°C	16 TQFN-EP** (5mm x 5mm)

Ordering Information continued at end of data sheet.

**Contact factory for dice specifications.*
***EP = Exposed Pad*
****Contact factory for availability.*
+Denotes a lead(Pb)-free/RoHS-compliant package.

Pin Configurations/Functional Diagrams/Truth Tables

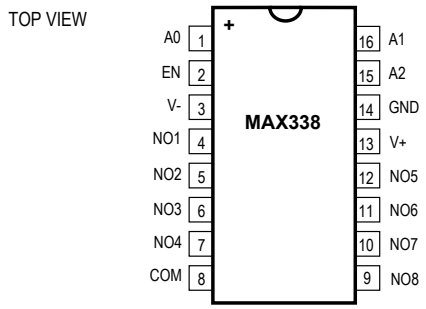

DIP/SO/QSOP

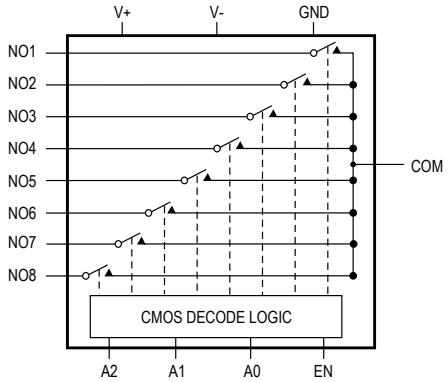

MAX338 8-CHANNEL SINGLE-ENDED MULTIPLEXER

Pin Configurations/Functional Diagrams/Truth Tables continued at end of data sheet.

Absolute Maximum Ratings

Voltage Referenced to V
- V+ ..... -0.3V, 44V
- GND ..... -0.3V, 25V

Digital Inputs, NO, COM (Note 1) ..... (V- - 2V) to (V+ + 2V) or 30mA (whichever occurs first)

Continuous Current (any terminal) 30mA

Peak Current, NO or COM
- (pulsed at 1ms, 10% duty cycle max) 100mA

Continuous Power Dissipation (T_A = +70°C)
- Plastic DIP (derate 10.53mW/°C above +70°C) 842mW
- Narrow SO (derate 8.70mW/°C above +70°C) 696mW
- 16 QSOP (derate 8.3mW/°C above +70°C) 666.7mW
- 16-Pin TQFN (derate 20.8mW/°C above +70°C) ... 1666.7mW
- CERDIP (derate 10.00mW/°C above +70°C) 800mW

Operating Temperature Ranges
- MAX33_C__ ..... 0°C to +70°C
- MAX33_E__ ..... -40°C to +85°C
- MAX33_MJE, MSE ..... -55°C to +125°C

Storage Temperature Range ..... -65°C to +150°C

Lead Temperature (soldering, 10sec) ..... +300°C

Soldering Temperature (reflow)
- Lead(Pb)-free packages ..... +260°C
- Packages containing lead(Pb) ..... +240°C

Note 1: Signals on NO, COM, EN, A0, A1, or A2 exceeding V+ or V- are clamped by internal diodes. Limit forward current to maximum current ratings.

Stresses beyond those listed under "Absolute Maximum Ratings" may cause permanent damage to the device. These are stress ratings only, and functional operation of the device at these or any other conditions beyond those indicated in the operational sections of the specifications is not implied. Exposure to absolute maximum rating conditions for extended periods may affect device reliability.

Electrical Characteristics—Dual Supplies

(V+ = +15V, V- = -15V, V_{GND} = 0V, V_{AH} = +2.4V, V_{AL} = +0.8V, T_A = T_{MIN} to T_{MAX}, unless otherwise noted.)

PARAMETER	SYMBOL	CONDITIONS				MIN	TYP (Note 2)	MAX	UNITS
SWITCH									
Analog Signal Range	V_{NO}, V_{COM}	(Note 3)				-15		15	V
On-Resistance	R_{ON}	I_{NO} = 0.2mA, V_{COM} = ±10V		T_A = +25°C			220	400	Ω
				T_A = T_{MIN} to T_{MAX}				500	
On-Resistance Matching Between Channels	ΔR_{ON}	I_{NO} = 0.2mA, V_{COM} = ±10V (Note 4)		T_A = +25°C			4	10	Ω
				T_A = T_{MIN} to T_{MAX}				15	
NO-Off Leakage Current (Note 5)	$I_{NO(OFF)}$	V_{COM} = +10V, V_{NO} = ±10V, V_{EN} = 0V		T_A = +25°C		-0.02	0.001	0.02	nA
				T_A = T_{MIN} to T_{MAX}	C, E	-1.25		1.25	
					M	-20		20	
COM-Off Leakage Current (Note 5)	$I_{COM(OFF)}$	V_{NO} = ±10V, V_{COM} = +10V, V_{EN} = 0V	MAX338	T_A = +25°C		-0.05	0.005	0.05	nA
				T_A = T_{MIN} to T_{MAX}	C, E	-3.25		3.25	
					M	-40		40	
		V_{COM} = +10V, V_{NO} = ±10V, V_{EN} = 0V	MAX339	T_A = +25°C		-0.05	0.005	0.05	
				T_A = T_{MIN} to T_{MAX}	C, E	-1.65		1.65	
					M	-20		20	
COM-On Leakage Current (Note 5)	$I_{COM(ON)}$	V_{COM} = ±10V, V_{NO} = ±10V, Sequence each switch on	MAX338	T_A = +25°C		-0.05	0.006	0.05	nA
				T_A = T_{MIN} to T_{MAX}	C, E	-3.25		3.25	
					M	-40		40	
			MAX339	T_A = +25°C		-0.05	0.008	0.05	
				T_A = T_{MIN} to T_{MAX}	C, E	-1.65		1.65	
					M	-20		20	

Electrical Characteristics—Dual Supplies (continued)

(V+ = +15V, V- = -15V, V_{GND} = 0V, V_{AH} = +2.4V, V_{AL} = +0.8V, T_A = T_{MIN} to T_{MAX}, unless otherwise noted.)

PARAMETER	SYMBOL	CONDITIONS			MIN	TYP (Note 2)	MAX	UNITS
INPUT								
Input Current with Input Voltage High	I_{AH}	V_A = 2.4V or 15V			-1.0	0.001	1.0	µA
Input Current with Input Voltage Low	I_{AL}	V_{EN} = 0V or 2.4V, V_A = 0V			-1.0		1.0	µA
SUPPLY								
Power-Supply Range					±4.5		±20	V
Positive Supply Current	I+	V_{EN} = V_A = 0V		T_A = +25°C		50	100	µA
				T_A = T_{MIN} to T_{MAX}			150	
		V_{EN} = 2.4V, $V_{A(ALL)}$ = 2.4V		T_A = +25°C		290	500	µA
				T_A = T_{MIN} to T_{MAX}			600	
Negative Supply Current	I-	V_{EN} = 0V or 2.4V, $V_{A(ALL)}$ = 0V, 2.4V or 5V		T_A = +25°C	-1		1	µA
				T_A = T_{MIN} to T_{MAX}	-10		10	
DYNAMIC								
Transition Time	t_{TRANS}	Figure 2		T_A = +25°C/ T_A = -55°C		200	500	ns
				T_A = +125°C			650	ns
Break-Before-Make Interval	t_{OPEN}	Figure 4		T_A = +25°C	10	140		ns
Enable Turn-On Time	$t_{ON(EN)}$	Figure 3		T_A = +25°C		160	500	ns
				T_A = T_{MIN} to T_{MAX}			750	
Enable Turn-Off Time	$t_{OFF(EN)}$	Figure 3		T_A = +25°C		100	500	ns
				T_A = T_{MIN} to T_{MAX}			750	
Charge Injection (Note 3)	Q	C_L = 100pF, V_{NO} = 0V, R_S = 0Ω, Figure 6		T_A = +25°C		1.5	5	pC
Off Isolation (Note 6)	V_{ISO}	V_{EN} = 0V, R_L = 1kΩ, f = 100kHz		T_A = +25°C		-75		dB
Crosstalk Between Channels	V_{CT}	V_{EN} = 2.4V, f = 100kHz, V_{GEN} = $1V_{P-P}$, R_L = 1kΩ, Figure 7		T_A = +25°C		-92		dB
Logic Input Capacitance	C_{IN}	f = 1MHz		T_A = +25°C		2		pF
NO-Off Capacitance	$C_{NO(OFF)}$	f = 1MHz, V_{EN} = V_{NO} = 0V, Figure 8		T_A = +25°C		3		pF
COM-Off Capacitance	$C_{COM(OFF)}$	f = 1MHz, V_{EN} = 0.8V, V_{COM} = 0V, Figure 8	MAX338	T_A = +25°C		11		pF
			MAX339			6		
COM-On Capacitance	$C_{COM(ON)}$	f = 1MHz, V_{EN} = 2.4V, V_{COM} = 0V, Figure 8	MAX338	T_A = +25°C		16		pF
			MAX339			9		

Electrical Characteristics—Single Supply

(V+ = +12V, V- = 0V, V_{GND} = 0V, V_{AH} = +2.4V, V_{AL} = +0.8V, T_A = T_{MIN} to T_{MAX}, unless otherwise noted.)

PARAMETER	SYMBOL	CONDITIONS		MIN	TYP (Note 2)	MAX	UNITS
SWITCH							
Analog Signal Range	V_{NO}, V_{COM}	(Note 3)		0		12	V
On-Resistance	R_{ON}	I_{NO} = 0.2mA V_{COM} = 3V or 10V	T_A = +25°C		460	650	Ω
DYNAMIC							
Transition Time (Note 3)	t_{TRANS}	V_{NO1} = 8V, V_{NO8} = 0V, V_{IN} = 2.4V, Figure 1	T_A = +25°C/ T_A = -55°C		210	500	ns
						800	ns
Enable Turn-On Time (Note 3)	$t_{ON(EN)}$	V_{INH} = 2.4V, V_{INL} = 0V, V_{NO1} = 5V, Figure 3	T_A = +25°C		280	500	ns
Enable Turn-Off Time (Note 3)	$t_{OFF(EN)}$	V_{INH} = 2.4V, V_{INL} = 0V, V_{NO1} = 5V, Figure 3	T_A = +25°C		110	500	ns
Charge Injection (Note 3)	Q	C_L = 100pF, V_{NO} = 0V, R_S = 0Ω	T_A = +25°C		1.8	5	ns

Note 2: The algebraic convention where the most negative value is a minimum and the most positive value a maximum is used in this data sheet.
Note 3: Guaranteed by design.
Note 4: $\Delta R_{ON} = R_{ON(MAX)} - R_{ON(MIN)}$.
Note 5: Leakage parameters are 100% tested at the maximum rated hot temperature and guaranteed by correlation at +25°C.
Note 6: Worst-case isolation is on channel 4 because of its proximity to the drain pin. Off isolation = 20log V_{COM}/V_{NO}, where V_{COM} = output and V_{NO} = input to off switch.

Typical Operating Characteristics

(T_A = +25°C, unless otherwise noted.)

ON-RESISTANCE vs. V_{COM} (DUAL SUPPLIES)

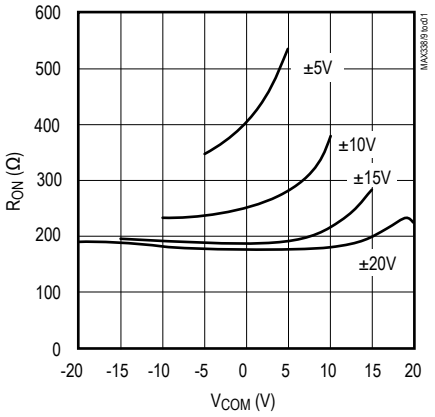

ON-RESISTANCE vs. V_{COM} OVER TEMPERATURE (DUAL SUPPLIES)

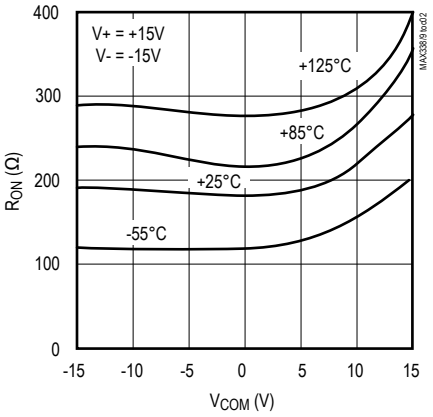

ON-RESISTANCE vs. V_{COM} (SINGLE SUPPLY)

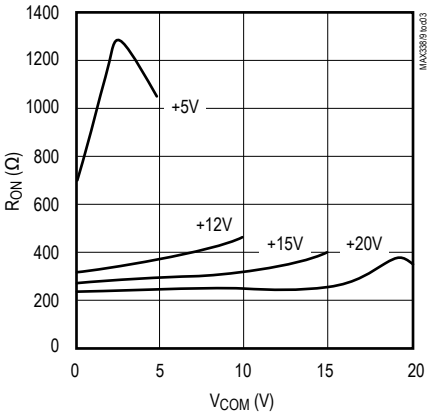

ON-RESISTANCE vs. V_{COM} OVER TEMPERATURE (SINGLE SUPPLY)

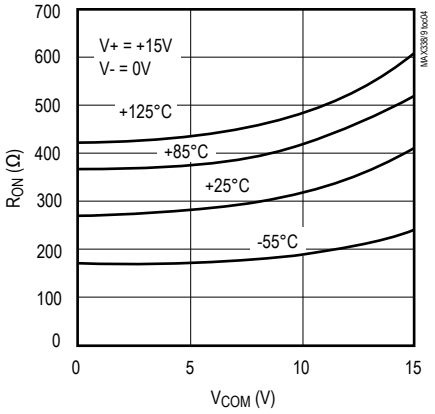

OFF LEAKAGE vs. TEMPERATURE

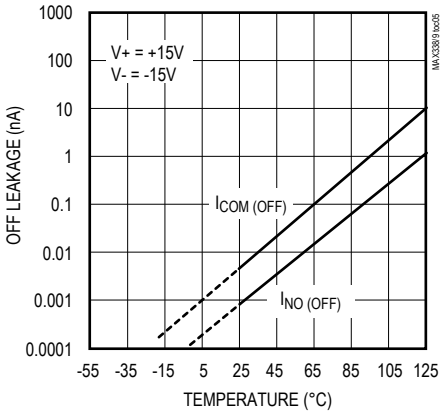

ON LEAKAGE vs. TEMPERATURE

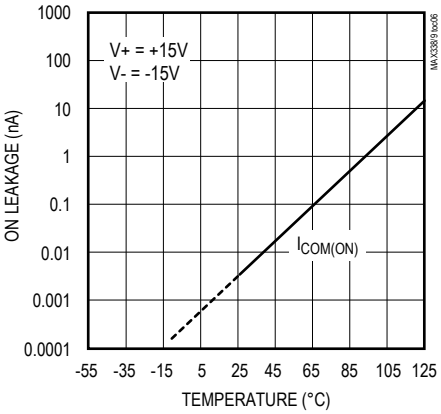

CHARGE INJECTION vs. V_{COM}

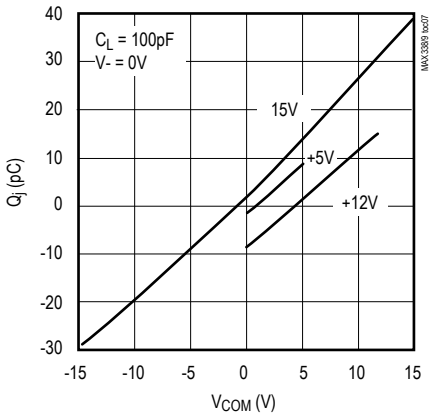

SUPPLY CURRENT vs. TEMPERATURE

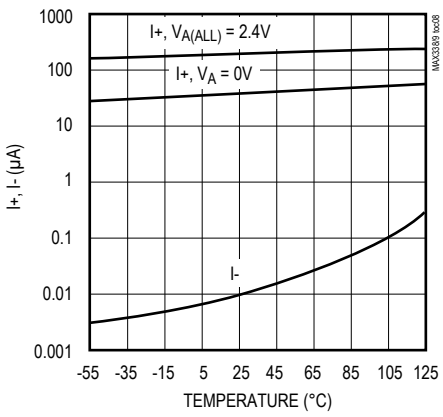

TRANSITION TIME vs. POWER SUPPLIES

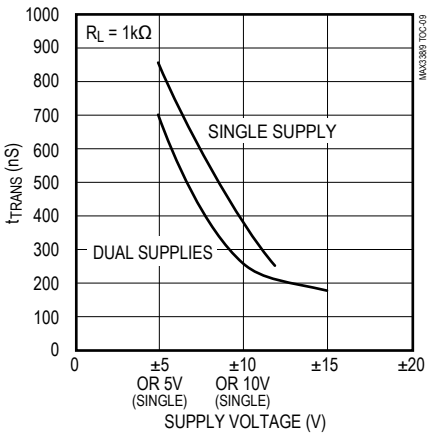

Pin Description

PIN				NAME	FUNCTION
MAX338		MAX339			
DIP/SO/QSOP	TQFN-EP	DIP/SO/QSOP	TQFN-EP		
1, 15, 16,	15, 14, 13	—	—	A0, A2, A1	Address Inputs
—	—	1, 16	15, 14	A0, A1	Address Inputs
2	16	2	16	EN	Enable
3	1	3	1	V-	Negative-Supply Voltage Input
4–7	2–5	—	—	NO1–NO14	Analog Inputs—Bidirectional
—	—	4–7	2–5	NO1A–NO4A	Analog Inputs—Bidirectional
8	6	—	—	COM	Analog Output—Bidirectional
—	—	8, 9	6, 7	COMA, COMB	Analog Outputs—Bidirectional
9–12	7–10	—	—	NO8–NO5	Analog Inputs—Bidirectional
—	—	10–13	8–11	NO4B–NO1B	Analog Inputs—Bidirectional
13	11	14	12	V+	Positive-Supply Voltage Input
14	12	15	13	GND	Ground
—	—	—	—	Exposed Pad	Exposed Pad (TQFN only). Connect EP to V+.

Applications Information

Operation with Supply Voltages Other than 15V

Using supply voltages less than ±15V will reduce the analog signal range. The MAX338/MAX339 switches operate with ±4.5V to ±20V bipolar supplies or with a +4.5V to +30V single supply. Connect V- to GND when operating with a single supply. Both device types can also operate with unbalanced supplies such as +24V and -5V. The *Typical Operating Characteristic*s graphs show typical on-resistance with 20V, 15V, 10V, and 5V supplies. (Switching times increase by a factor of two or more for operation at 5V.)

Overvoltage Protection

Proper power-supply sequencing is recommended for all CMOS devices. Do not exceed the absolute maximum ratings, because stresses beyond the listed ratings may cause permanent damage to the devices. Always sequence V+ on first, then V-, followed by the logic inputs NO and COM. If power-supply sequencing is not possible, add two small signal diodes in series with supply pins for overvoltage protection (Figure 1). Adding diodes reduces the analog signal range to 1V below V+ and 1V above V-, but does not affect the devices' low switch resistance and low leakage characteristics. Device operation is unchanged, and the difference between V+ and V- should not exceed 44V.

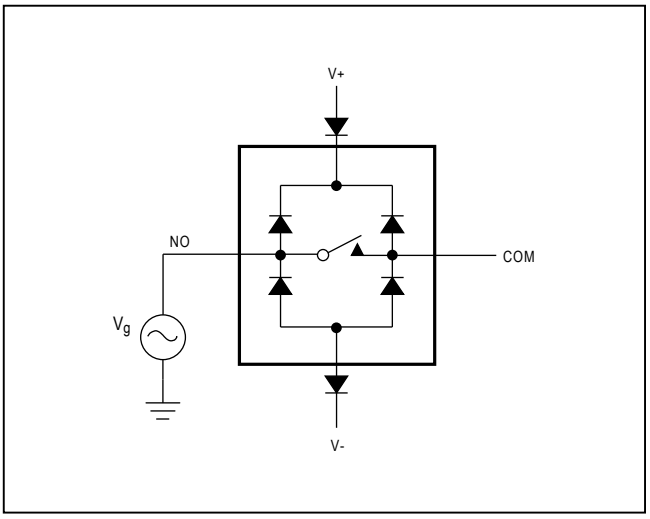

Figure 1. Overvoltage Protection Using External Blocking Diodes

Test Circuits/Timing Diagrams

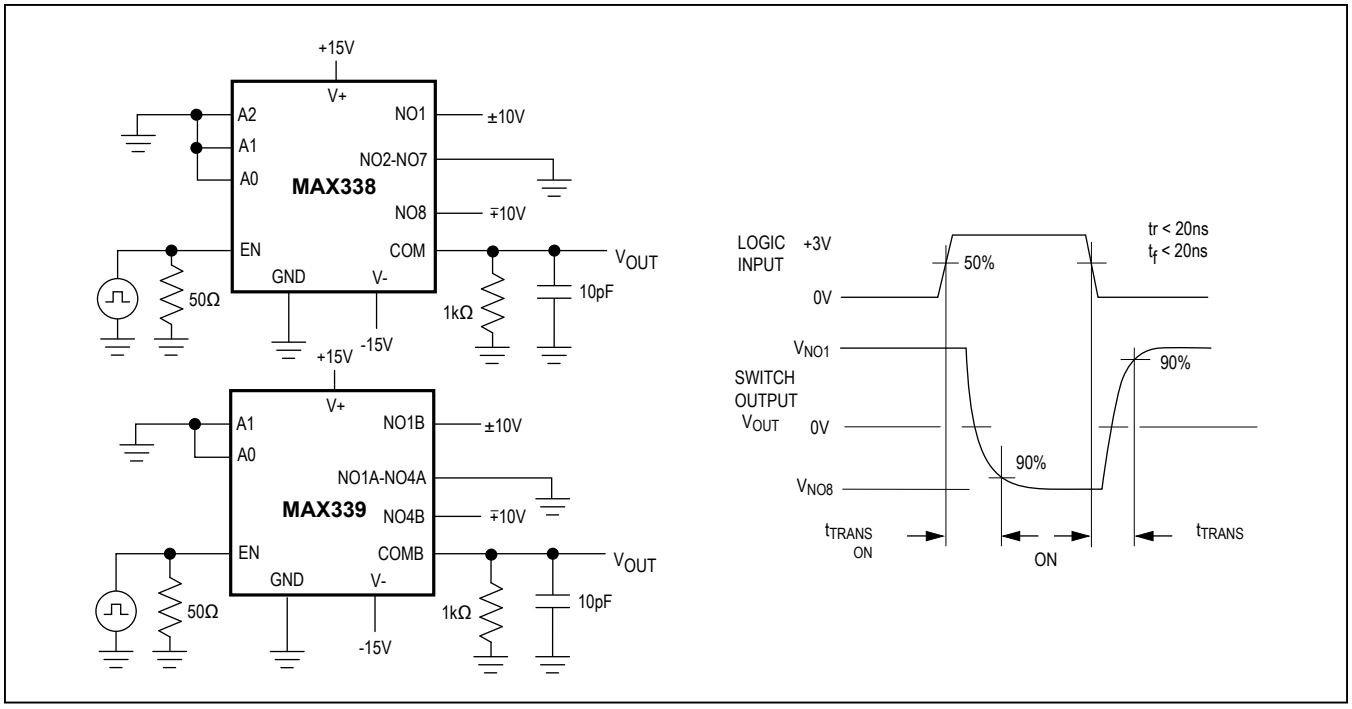

Figure 2. Transition Time

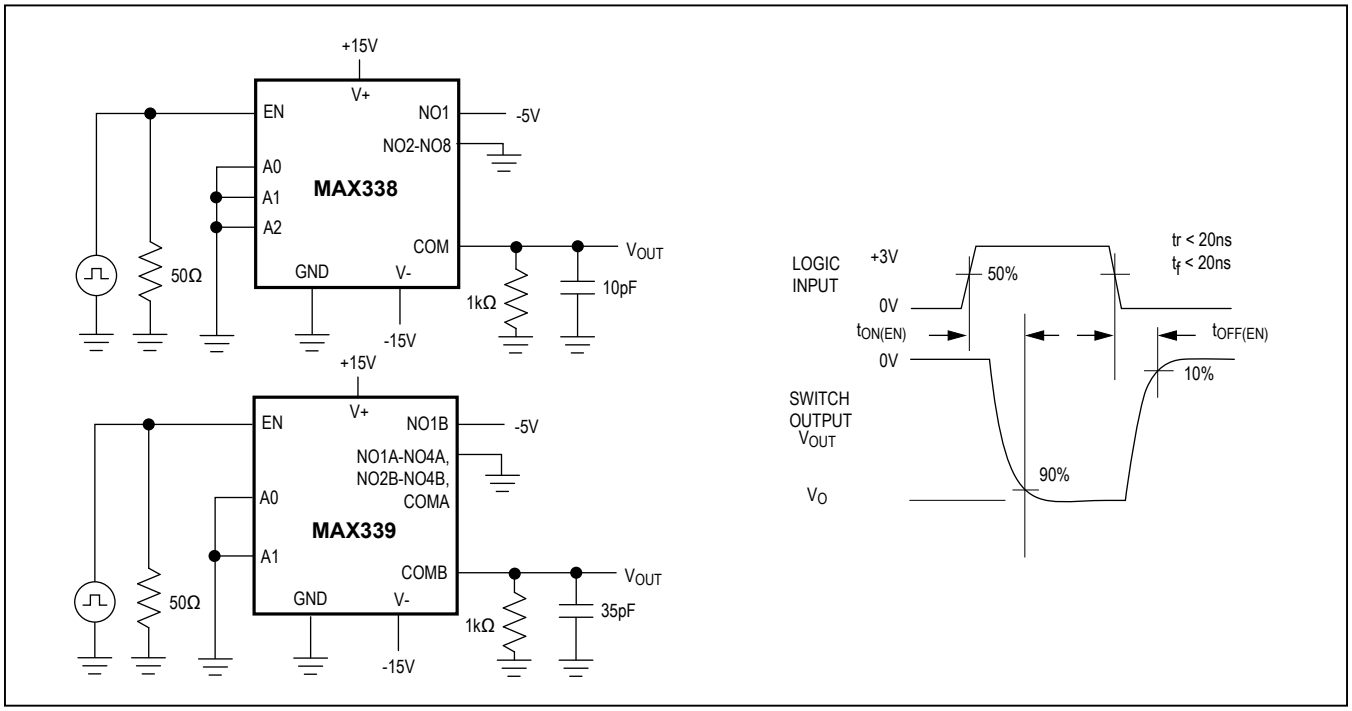

Figure 3. Enable Switching Time

Test Circuits/Timing Diagrams (continued)

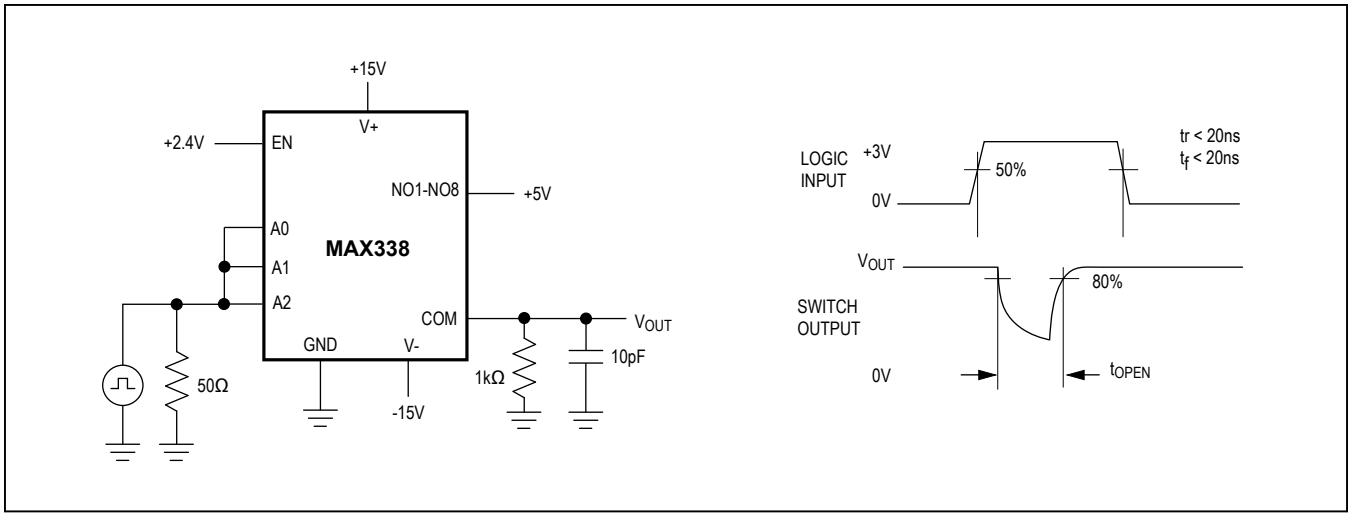

Figure 4. Break-Before-Make Interval

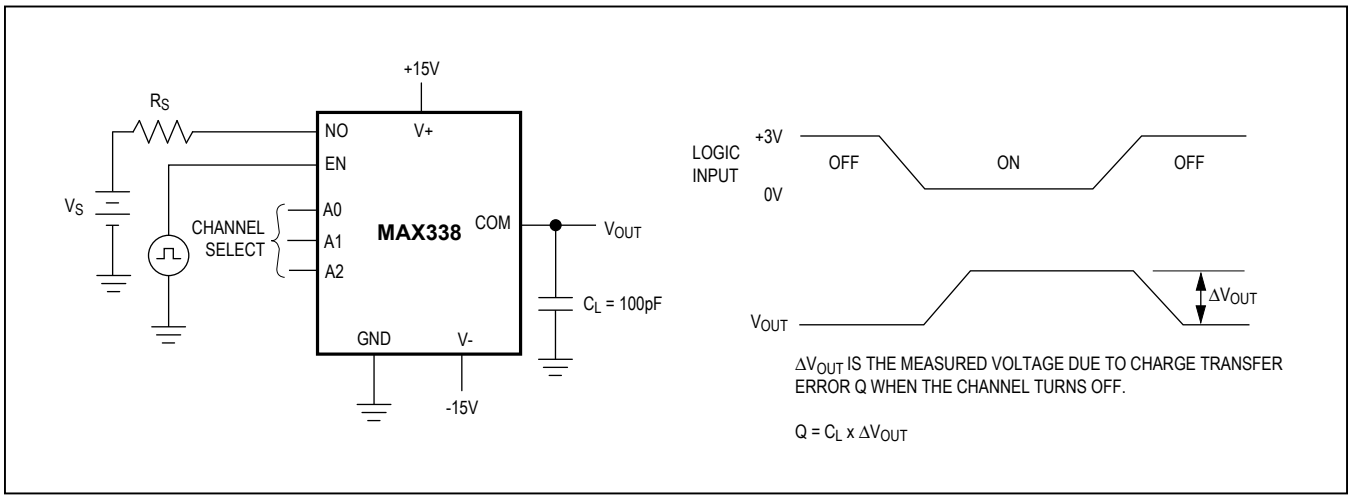

Figure 5. Charge Injection

Test Circuits/Timing Diagrams (continued)

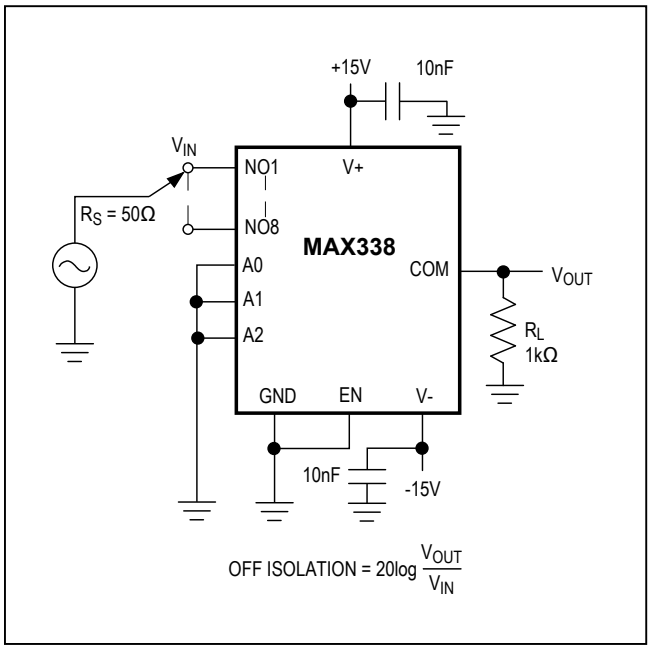

Figure 6. Off-Isolation

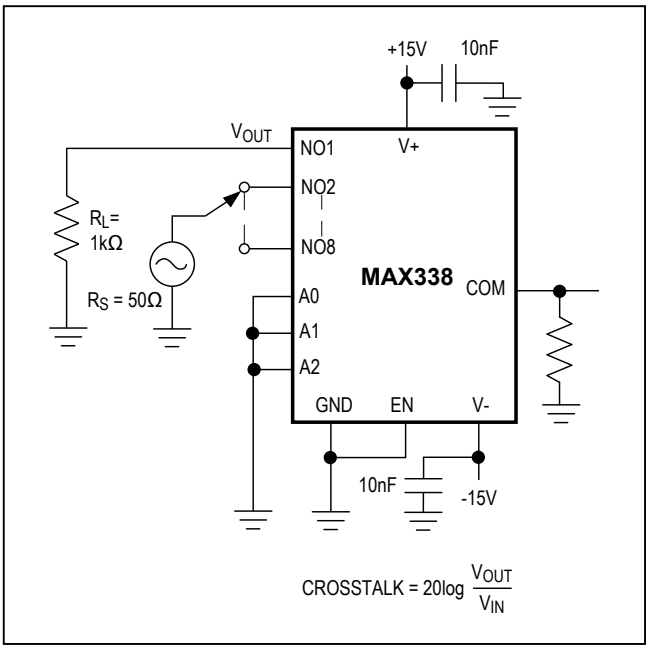

Figure 7. Crosstalk

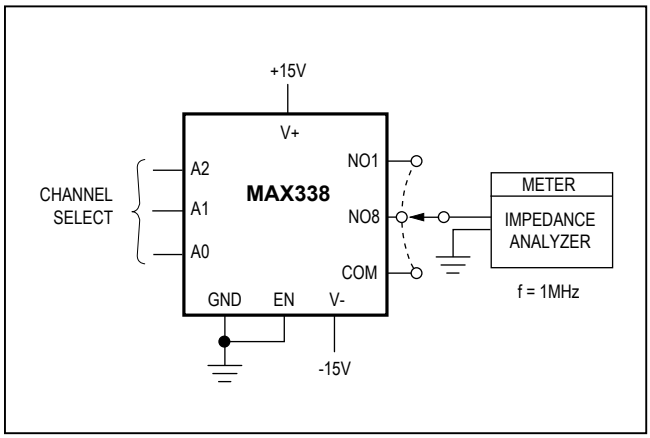

Figure 8. NO/COM Capacitance

Pin Configurations/Functional Diagrams/Truth Tables (continued)

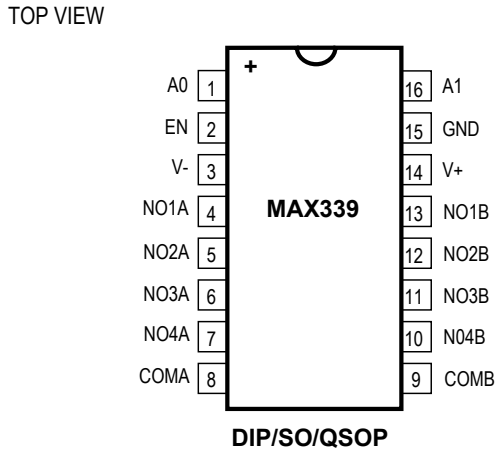

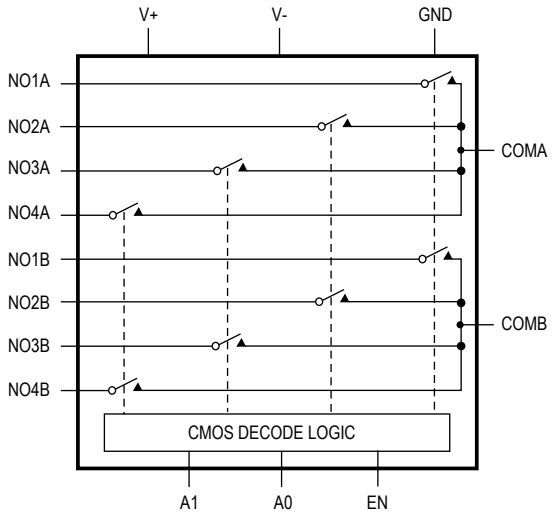

MAX339 DUAL 4-CHANNEL MULTIPLEXER

A2	A1	A0	EN	ON SWITCH
X	X	X	0	None
0	0	0	1	1
0	0	1	1	2
0	1	0	1	3
0	1	1	1	4
1	0	0	1	5
1	0	1	1	6
1	1	0	1	7
1	1	1	1	8

MAX338

LOGIC "0" $V_{AL} \geq 0.8V$, LOGIC "1" $V_{AH} \geq 2.4V$

A1	A0	EN	ON SWITCH
X	X	0	None
0	0	1	1
0	1	1	2
1	0	1	3
1	1	1	4

MAX339

LOGIC "0" $V_{AL} \geq 0.8V$, LOGIC "1" $V_{AH} \geq 2.4V$

Pin Configurations/Functional Diagrams/Truth Tables (continued)

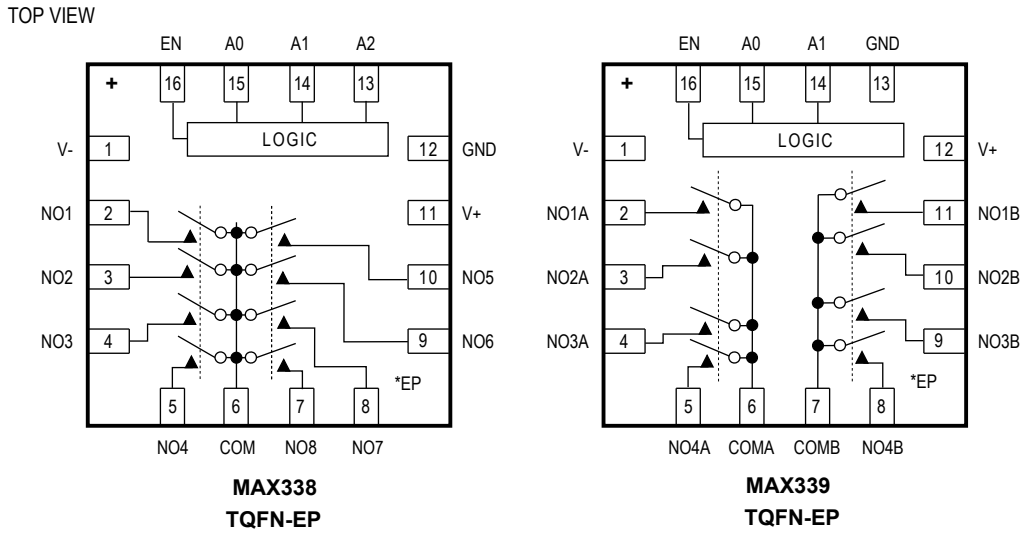

*CONNECT EP TO V+

Ordering Information (continued)

PART	TEMP RANGE	PIN-PACKAGE
MAX338EPE+	-40°C to +85°C	16 PDIP
MAX338ESE+	-40°C to +85°C	16 Narrow SO
MAX338EJE	-40°C to +85°C	16 CERDIP
MAX338MJE	-55°C to +125°C	16 CERDIP***
MAX338MSE/PR3+	-55°C to +125°C	16 Narrow SO
MAX339CEE+	0°C to +70°C	16 QSOP
MAX339CPE+	0°C to +70°C	16 PDIP
MAX339CSE+	0°C to +70°C	16 Narrow SO
MAX339C/D	0°C to +70°C	Dice*

PART	TEMP RANGE	PIN-PACKAGE
MAX339EEE+	-40°C to +85°C	16 QSOP
MAX339ETE+	-40°C to +85°C	16 TQFN-EP** (5mm x 5mm)
MAX339EPE+	-40°C to +85°C	16 PDIP
MAX339ESE+	-40°C to +85°C	16 Narrow SO
MAX339EJE	-40°C to +85°C	16 CERDIP
MAX339MJE	-55°C to +125°C	16 CERDIP***
MAX339MSE/PR3+	-55°C to +125°C	16 Narrow SO

**Contact factory for dice specifications.*
***EP = Exposed Pad*
****Contact factory for availability.*
+Denotes a lead(Pb)-free/RoHS-compliant package.

Package Information

For the latest package outline information and land patterns (footprints), go to **www.maximintegrated.com/packages**. Note that a "+", "#", or "-" in the package code indicates RoHS status only. Package drawings may show a different suffix character, but the drawing pertains to the package regardless of RoHS status.

PACKAGE TYPE	PACKAGE CODE	OUTLINE NO.	LAND PATTERN NO.
16 PDIP	P16+1	21-0043	—
16 Narrow SO	S16+1	21-0041	90-0097
16 QSOP	E16+5	21-0055	90-0167
16 TQFN-EP	T1655+3	21-0140	90-0073
16 CDIP	J16+4	21-0045	—

Revision History

REVISION NUMBER	REVISION DATE	DESCRIPTION	PAGES CHANGED
4	4/12	Added the MAX338CEE+ / MAX338EEE+/ MAX338MSE /PR3 / MAX339CEE+ / MAX339EEE+ part and packaging information	1, 2, 6, 10, 11
5	10/17	Updated *Ordering Information* table	11
6	5/19	Updated *Electrical Characteristics* table	3, 4

For pricing, delivery, and ordering information, please visit Maxim Integrated's online storefront at https://www.maximintegrated.com/en/storefront/storefront.html.

Maxim Integrated cannot assume responsibility for use of any circuitry other than circuitry entirely embodied in a Maxim Integrated product. No circuit patent licenses are implied. Maxim Integrated reserves the right to change the circuitry and specifications without notice at any time. The parametric values (min and max limits) shown in the Electrical Characteristics table are guaranteed. Other parametric values quoted in this data sheet are provided for guidance.

Maxim Integrated and the Maxim Integrated logo are trademarks of Maxim Integrated Products, Inc. © 2019 Maxim Integrated Products, Inc.

Looking for pricing, stock, or lifecycle information?

Click below to explore more details on WIN SOURCE:

- View MAX338ESE+T on WIN SOURCE
- Maxim Integrated Information

Optimize Your Supply Chain with WIN SOURCE Solutions

- Global Sourcing Solution
- Obsolete Management
- Cost Control Management
- Shortage Management
- Alternative Solution
- Excess Inventory Management