THE DATASHEET OF

MAX3232CDRG4

www.win-source.net 0086-755-83957316

MAX3232 3-V to 5.5-V Multichannel RS-232 Line Driver and Receiver With ±15-kV ESD Protection

1 Features

- RS-232 Bus-terminal esd protection exceeds ±15 kV using human-body model (HBM)
- Meets or exceeds the requirements of TIA/EIA-232-F and ITU V.28 standards
- Operates with 3-V to 5.5-V V_{CC} supply
- Operates up to 250 kbit/s
- Two drivers and two receivers
- Low supply current: 300 µA Typical
- External capacitors: 4 × 0.1 µF
- Accepts 5-V logic input with 3.3-V supply
- Alternative high-speed terminal-compatible devices (1 Mbit/s)
  - SN65C3232 (–40°C to 85°C)
  - SN75C3232 (0°C to 70°C)

2 Applications

- Industrial PCs
- Wired networking
- Data center and enterprise networking
- Battery-powered systems
- PDAs
- Notebooks
- Laptops
- Palmtop PCs
- Hand-held equipment

3 Description

The MAX3232 device consists of two line drivers, two line receivers, and a dual charge-pump circuit with ±15-kV ESD protection terminal to terminal (serial-port connection terminals, including GND). The device meets the requirements of TIA/EIA-232-F and provides the electrical interface between an asynchronous communication controller and the serial-port connector. The charge pump and four small external capacitors allow operation from a single 3-V to 5.5-V supply. The devices operate at data signaling rates up to 250 kbit/s and a maximum of 30-V/µs driver output slew rate.

Device Information

PART NUMBER	PACKAGE(1)	BODY SIZE
MAX3232	SOIC (D) (16)	9.90 mm × 3.91 mm
	SSOP (DB) (16)	6.20 mm × 5.30 mm
	SOIC (DW) (16)	10.30 mm × 7.50 mm
	TSSOP (PW) (16)	5.00 mm × 4.40 mm

(1) For all available packages, see the orderable addendum at the end of the data sheet.

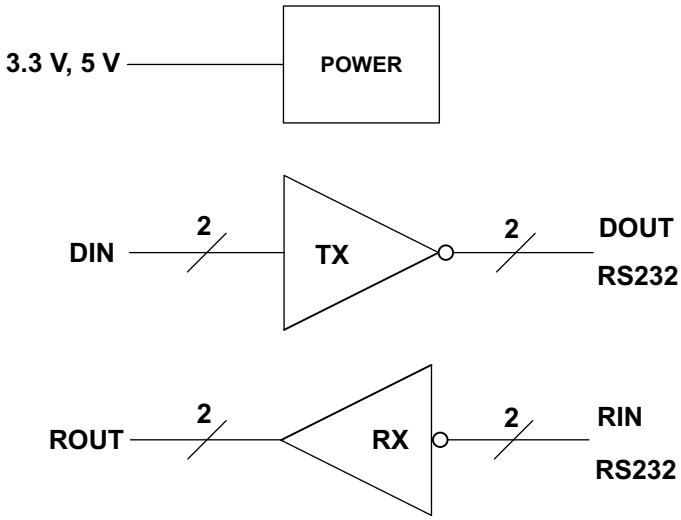

Simplified Schematic

An IMPORTANT NOTICE at the end of this data sheet addresses availability, warranty, changes, use in safety-critical applications, intellectual property matters and other important disclaimers. PRODUCTION DATA.

Table of Contents

1 Features....1
2 Applications....1
3 Description....1
4 Revision History....2
5 Pin Configuration and Functions....3
6 Specifications....4
6.1 Absolute Maximum Ratings....4
6.2 ESD Ratings....4
6.3 Recommended Operating Conditions....4
6.4 Thermal Information....5
6.5 Electrical Characteristics — Device....5
6.6 Electrical Characteristics — Driver....5
6.7 Electrical Characteristics — Receiver....6
6.8 Switching Characteristics....6
6.9 Typical Characteristics....7
7 Parameter Measurement Information....8
8 Detailed Description....9
8.1 Overview....9
8.2 Functional Block Diagram....9
8.3 Feature Description....9
8.4 Device Functional Modes....10
9 Application and Implementation....11
9.1 Application Information....11
9.2 Standard Application....11
10 Power Supply Recommendations....12
11 Layout....13
11.1 Layout Guidelines....13
11.2 Layout Example....13
12 Device and Documentation Support....14
12.1 Receiving Notification of Documentation Updates....14
12.2 Support Resources....14
12.3 Trademarks....14
12.4 Electrostatic Discharge Caution....14
12.5 Glossary....14
13 Mechanical, Packaging, and Orderable Information....14

4 Revision History

NOTE: Page numbers for previous revisions may differ from page numbers in the current version.

Changes from Revision N (June 2017) to Revision O (June 2021)	Page
• Added *Applications*: Industrial PCs, Wired networking, and Data center and enterprise computing	1
• Changed the thermal parameter values for D, DB and PW packages in the *Thermal Information* table	5

Changes from Revision M (April 2017) to Revision N (June 2017)	Page
• Changed the *Thermal Information* table	5

Changes from Revision L (March 2017) to Revision M (April 2017)	Page
• Changed From: "±" To: "to" in the V_{CC} column of Table 9-1	12

Changes from Revision K (January 2015) to Revision L (March 2017)	Page
• Changed pin 16 (V_{CC}) in Typical Operating Circuit and Capacitor Values	11

Changes from Revision J (January 2014) to Revision K (January 2015)	Page
• Added *Applications*, *Device Information* table, *Pin Functions* table, *ESD Ratings* table, *Thermal Information* table, *Typical Characteristics*, *Feature Description* section, *Device Functional Modes*, *Application and Implementation* section, *Power Supply Recommendations* section, *Layout* section, *Device and Documentation Support* section, and *Mechanical, Packaging, and Orderable Information* section	1

Changes from Revision I (January 2004) to Revision J (January 2014)	Page
• Updated document to new TI data sheet format - no specification changes	1
• Deleted *Ordering Information* table	1

Copyright © 2021 Texas Instruments Incorporated

5 Pin Configuration and Functions

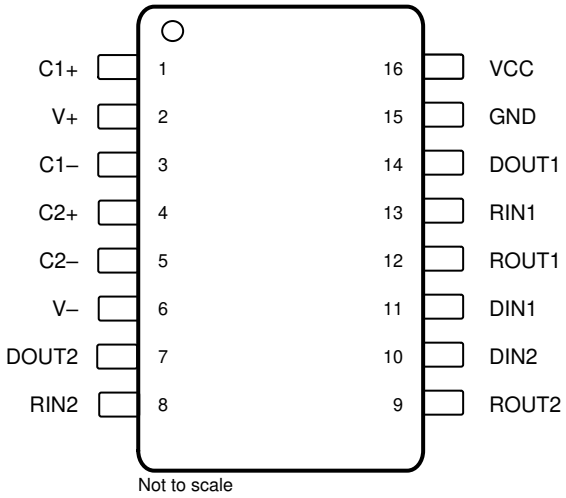

Figure 5-1. D, DB, DW, or PW Package, 16-Pin SOIC, SSOP, or TSSOP, Top View

Table 5-1. Pin Functions

PIN		TYPE	DESCRIPTION
NAME	NO.		
C1+	1	—	Positive lead of C1 capacitor
V+	2	O	Positive charge pump output for storage capacitor only
C1–	3	—	Negative lead of C1 capacitor
C2+	4	—	Positive lead of C2 capacitor
C2–	5	—	Negative lead of C2 capacitor
V–	6	O	Negative charge pump output for storage capacitor only
DOUT2	7	O	RS232 line data output (to remote RS232 system)
DOUT1	14	O	RS232 line data output (to remote RS232 system)
RIN2	8	I	RS232 line data input (from remote RS232 system)
RIN1	13	I	RS232 line data input (from remote RS232 system)
ROUT2	9	O	Logic data output (to UART)
ROUT1	12	O	Logic data output (to UART)
DIN2	10	I	Logic data input (from UART)
DIN1	11	I	Logic data input (from UART)
GND	15	—	Ground
V_{CC}	16	—	Supply Voltage, Connect to external 3 V to 5.5 V power supply

Copyright © 2021 Texas Instruments Incorporated

6 Specifications

6.1 Absolute Maximum Ratings

over operating free-air temperature range (unless otherwise noted)[1]

			MIN	MAX	UNIT
V_{CC}	Supply voltage range[2]		–0.3	6	V
V+	Positive output supply voltage range[2]		–0.3	7	V
V–	Negative output supply voltage range[2]		–7	0.3	V
V+ – V–	Supply voltage difference[2]			13	V
V_I	Input voltage range	Drivers	–0.3	6	V
		Receivers	–25	25	
V_O	Output voltage range	Drivers	–13.2	13.2	V
		Receivers	–0.3	V_{CC} + 0.3	
T_J	Operating virtual junction temperature			150	°C
T_{stg}	Storage temperature range		–65	150	°C

(1) Operation outside the *Absolute Maximum Ratings* may cause permanent device damage. *Absolute Maximum Ratings* do not imply functional operation of the device at these or any other conditions beyond those listed under *Recommended Operating Conditions*. If used outside the *Recommended Operating Conditions* but within the *Absolute Maximum Ratings*, the device may not be fully functional, and this may affect device reliability, functionality, performance, and shorten the device lifetime.
(2) All voltages are with respect to network GND.

6.2 ESD Ratings

			VALUE	UNIT
$V_{(ESD)}$	Electrostatic discharge	Human body model (HBM), per ANSI/ESDA/JEDEC JS-001 RIN , DOUT, and GND pins [1]	15000	V
		Human body model (HBM), per ANSI/ESDA/JEDEC JS-001 All other pins[1]	3000	
		Charged device model (CDM), per JEDEC specification JESD22-C101, all pins[2]	1000	

(1) JEDEC document JEP155 states that 500-V HBM allows safe manufacturing with a standard ESD control process.
(2) JEDEC document JEP157 states that 250-V CDM allows safe manufacturing with a standard ESD control process.

6.3 Recommended Operating Conditions

(see Typical Operating Circuit and Capacitor Values)[1]

				MIN	NOM	MAX	UNIT
V_{CC}	Supply voltage		V_{CC} = 3.3 V	3	3.3	3.6	V
			V_{CC} = 5 V	4.5	5	5.5	
V_{IH}	Driver high-level input voltage	DIN	V_{CC} = 3.3 V	2			V
			V_{CC} = 5 V	2.4			
V_{IL}	Driver low-level input voltage	DIN				0.8	V
V_I	Driver input voltage	DIN		0		5.5	V
	Receiver input voltage	RIN		–25		25	
T_A	Operating free-air temperature		MAX3232C	0		70	°C
			MAX3232I	–40		85	

(1) Test conditions are C1–C4 = 0.1 µF at V_{CC} = 3.3 V ± 0.3 V; C1 = 0.047 µF, C2–C4 = 0.33 µF at V_{CC} = 5 V ± 0.5 V.

Copyright © 2021 Texas Instruments Incorporated

6.4 Thermal Information

THERMAL METRIC[1]		MAX3232				UNIT
		SOIC (D)	SSOP (DB)	SOIC (DW)	TSSOP (PW)	
		16 PINS				
$R_{\theta JA}$	Junction-to-ambient thermal resistance	85.9	103.1	66.6	108.2	°C/W
$R_{\theta JC(top)}$	Junction-to-case (top) thermal resistance	43.1	49.2	32.4	39.0	°C/W
$R_{\theta JB}$	Junction-to-board thermal resistance	44.5	54.8	31.9	54.4	°C/W
ψ_{JT}	Junction-to-top characterization parameter	10.1	12	8.4	3.3	°C/W
ψ_{JB}	Junction-to-board characterization parameter	44.1	54.1	31.5	53.8	°C/W
$R_{\theta JC(bot)}$	Junction-to-case (bottom) thermal resistance	n/a	n/a	n/a	n/a	°C/W

(1) For more information about traditional and new thermal metrics, see the *Semiconductor and IC Package Thermal Metrics* application report.

6.5 Electrical Characteristics — Device

over recommended ranges of supply voltage and operating free-air temperature (unless otherwise noted)[2] (see Typical Operating Circuit and Capacitor Values)

PARAMETER		TEST CONDITIONS		MIN	TYP[1]	MAX	UNIT
I_{CC}	Supply current	No load,	V_{CC} = 3.3 V to 5 V		0.3	1	mA

(1) All typical values are at V_{CC} = 3.3 V or V_{CC} = 5 V, and T_A = 25°C.
(2) Test conditions are C1–C4 = 0.1 µF at V_{CC} = 3.3 V ± 0.3 V; C1 = 0.047 µF, C2–C4 = 0.33 µF at V_{CC} = 5 V ± 0.5 V.

6.6 Electrical Characteristics — Driver

over recommended ranges of supply voltage and operating free-air temperature (unless otherwise noted)[3] (see Typical Operating Circuit and Capacitor Values)

PARAMETER		TEST CONDITIONS		MIN	TYP[1]	MAX	UNIT
V_{OH}	High-level output voltage	D_{OUT} at R_L = 3 kΩ to GND,	D_{IN} = GND	5	5.4		V
V_{OL}	Low-level output voltage	D_{OUT} at R_L = 3 kΩ to GND,	D_{IN} = V_{CC}	–5	–5.4		V
I_{IH}	High-level input current	V_I = V_{CC}			±0.01	±1	µA
I_{IL}	Low-level input current	V_I at GND			±0.01	±1	µA
I_{OS} [2]	Short-circuit output current	V_{CC} = 3.6 V	V_O = 0 V		±35	±60	mA
		V_{CC} = 5.5 V	V_O = 0 V				
r_O	Output resistance	V_{CC}, V+, and V– = 0 V	V_O = ±2 V	300	10M		Ω

(1) All typical values are at V_{CC} = 3.3 V or V_{CC} = 5 V, and T_A = 25°C.
(2) Short-circuit durations should be controlled to prevent exceeding the device absolute power dissipation ratings, and not more than one output should be shorted at a time.
(3) Test conditions are C1–C4 = 0.1 µF at V_{CC} = 3.3 V ± 0.3 V; C1 = 0.047 µF, C2–C4 = 0.33 µF at V_{CC} = 5 V ± 0.5

Copyright © 2021 Texas Instruments Incorporated

6.7 Electrical Characteristics — Receiver

over recommended ranges of supply voltage and operating free-air temperature (unless otherwise noted)[2] (see Typical Operating Circuit and Capacitor Values)

PARAMETER		TEST CONDITIONS	MIN	TYP[1]	MAX	UNIT
V_{OH}	High-level output voltage	I_{OH} = –1 mA	V_{CC} – 0.6	V_{CC} – 0.1		V
V_{OL}	Low-level output voltage	I_{OL} = 1.6 mA			0.4	V
V_{IT+}	Positive-going input threshold voltage	V_{CC} = 3.3 V		1.5	2.4	V
		V_{CC} = 5 V		1.8	2.4	
V_{IT-}	Negative-going input threshold voltage	V_{CC} = 3.3 V	0.6	1.2		V
		V_{CC} = 5 V	0.8	1.5		
V_{hys}	Input hysteresis (V_{IT+} – V_{IT-})			0.3		V
r_I	Input resistance	V_I = ±3 V to ±25 V	3	5	7	kΩ

(1) All typical values are at V_{CC} = 3.3 V or V_{CC} = 5 V, and T_A = 25°C.
(2) Test conditions are C1–C4 = 0.1 µF at V_{CC} = 3.3 V ± 0.3 V; C1 = 0.047 µF, C2–C4 = 0.33 µF at V_{CC} = 5 V ± 0.5 V.

6.8 Switching Characteristics

over recommended ranges of supply voltage and operating free-air temperature (unless otherwise noted)[3] (see Typical Operating Circuit and Capacitor Values)

PARAMETER		TEST CONDITIONS		MIN	TYP[1]	MAX	UNIT
	Maximum data rate	R_L = 3 kΩ, One D_{OUT} switching,	C_L = 1000 pF See Figure 7-1	150	250		kbit/s
$t_{sk(p)}$	Driver Pulse skew[2]	R_L = 3 kΩ to 7 kΩ,	C_L = 150 to 2500 pF See Figure 7-2		300		ns
SR(tr)	Slew rate, transition region (see Figure 7-1)	R_L = 3 kΩ to 7 kΩ, V_{CC} = 5 V	C_L = 150 to 1000 pF	6		30	V/µs
			C_L = 150 to 2500 pF	4		30	
$t_{PLH®)}$	Propagation delay time, low- to high-level output	C_L = 150 pF			300		ns
$t_{PHL®)}$	Propagation delay time, high- to low-level output				300		
$t_{sk(p)}$	Receiver Pulse skew[3]				300		

(1) All typical values are at V_{CC} = 3.3 V or V_{CC} = 5 V, and T_A = 25°C.
(2) Pulse skew is defined as $|t_{PLH} - t_{PHL}|$ of each channel of the same device.
(3) Test conditions are C1–C4 = 0.1 µF at V_{CC} = 3.3 V ± 0.3 V; C1 = 0.047 µF, C2–C4 = 0.33 µF at V_{CC} = 5 V ± 0.5 V.

Copyright © 2021 Texas Instruments Incorporated

6.9 Typical Characteristics

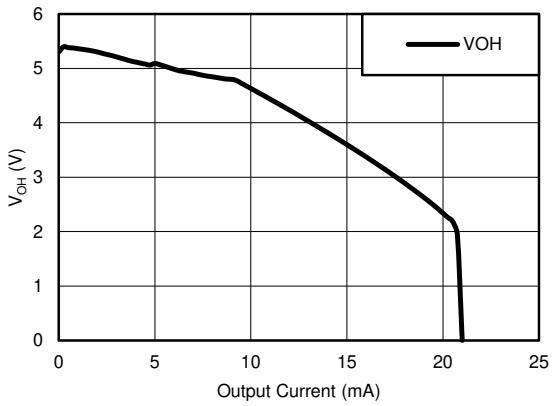

V_{CC} = 3.3 V

Figure 6-1. DOUT V_{OH} vs Load Current, Both Drivers Loaded

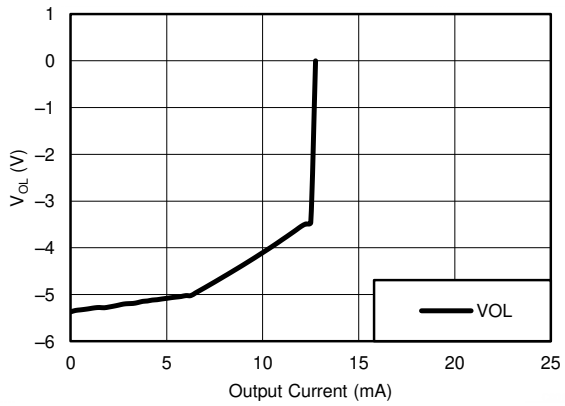

V_{CC} = 3.3 V

Figure 6-2. DOUT V_{OL} vs Load Current, Both Drivers Loaded

7 Parameter Measurement Information

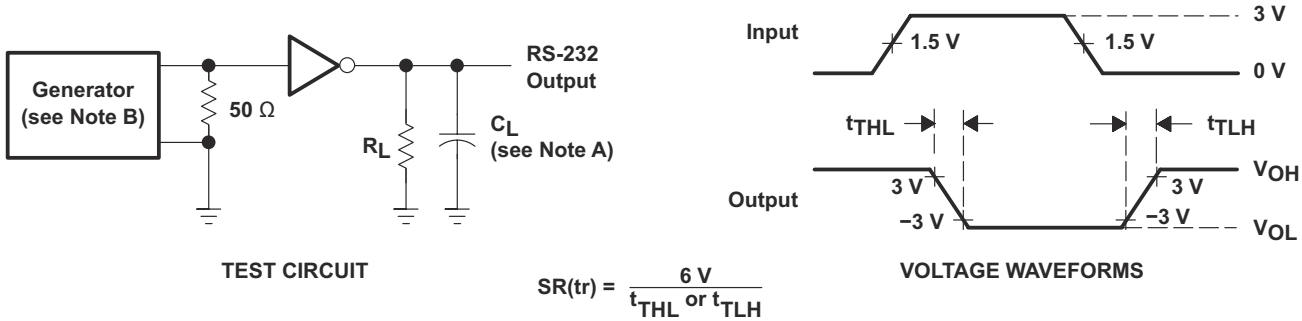

$$SR(tr) = \frac{6\ V}{t_{THL}\ or\ t_{TLH}}$$

A. C_L includes probe and jig capacitance.

B. The pulse generator has the following characteristics: PRR = 250 kbit/s, Z_O = 50 Ω, 50% duty cycle, t_r ≤ 10 ns, t_f ≤ 10 ns.

Figure 7-1. Driver Slew Rate

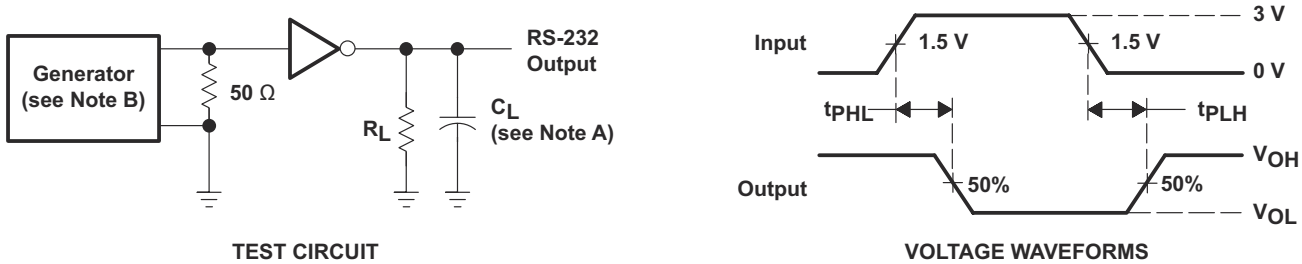

A. C_L includes probe and jig capacitance.

B. The pulse generator has the following characteristics: PRR = 250 kbit/s, Z_O = 50 Ω, 50% duty cycle, t_r ≤ 10 ns, t_f ≤ 10 ns.

Figure 7-2. Driver Pulse Skew

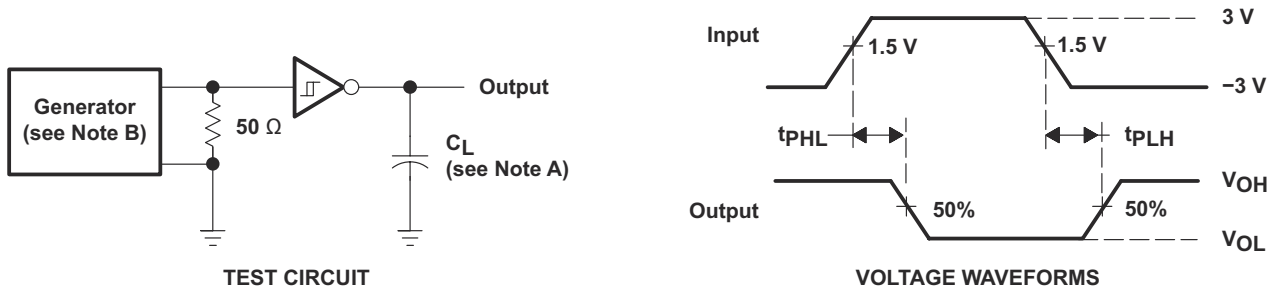

A. C_L includes probe and jig capacitance.

B. The pulse generator has the following characteristics: Z_O = 50 Ω, 50% duty cycle, t_r ≤ 10 ns, t_f ≤ 10 ns.

Figure 7-3. Receiver Propagation Delay Times

Copyright © 2021 Texas Instruments Incorporated

8 Detailed Description

8.1 Overview

The MAX3232 device consists of two line drivers, two line receivers, and a dual charge-pump circuit with ±15-kV ESD protection terminal to terminal (serial-port connection terminals, including GND). The device meets the requirements of TIA/EIA-232-F and provides the electrical interface between an asynchronous communication controller and the serial-port connector. The charge pump and four small external capacitors allow operation from a single 3-V to 5.5-V supply. The device operates at data signaling rates up to 250 kbit/s and a maximum of 30-V/µs driver output slew rate. Outputs are protected against shorts to ground.

8.2 Functional Block Diagram

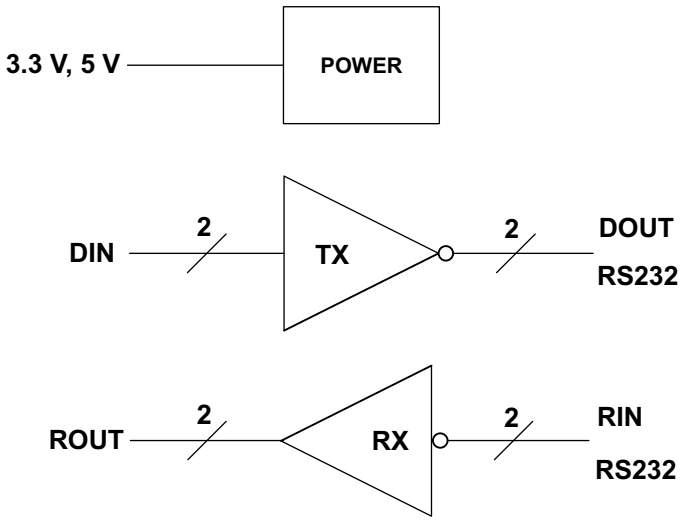

8.3 Feature Description

8.3.1 Power

The power block increases, inverts, and regulates voltage at V+ and V- pins using a charge pump that requires four external capacitors.

8.3.2 RS232 Driver

Two drivers interface standard logic level to RS232 levels. Both DIN inputs must be valid high or low.

8.3.3 RS232 Receiver

Two receivers interface RS232 levels to standard logic levels. An open input will result in a high output on ROUT. Each RIN input includes an internal standard RS232 load.

Copyright © 2021 Texas Instruments Incorporated

8.4 Device Functional Modes

Table 8-1. Each Driver[(1)]

INPUT DIN	OUTPUT DOUT
L	H
H	L

(1) H = high level, L = low level

Table 8-2. Each Receiver[(1)]

INPUT RIN	OUTPUT ROUT
L	H
H	L
Open	H

(1) H = high level, L = low level, Open = input disconnected or connected driver off

8.4.1 V_{CC} powered by 3 V to 5.5 V

The device will be in normal operation.

8.4.2 V_{CC} unpowered, V_{CC} = 0 V

When MAX3232 is unpowered, it can be safely connected to an active remote RS232 device.

Copyright © 2021 Texas Instruments Incorporated

9 Application and Implementation

Note

Information in the following applications sections is not part of the TI component specification, and TI does not warrant its accuracy or completeness. TI's customers are responsible for determining suitability of components for their purposes, as well as validating and testing their design implementation to confirm system functionality.

9.1 Application Information

For proper operation, add capacitors as shown in Typical Operating Circuit and Capacitor Values.

9.2 Standard Application

ROUT and DIN connect to UART or general purpose logic lines. RIN and DOUT lines connect to a RS232 connector or cable.

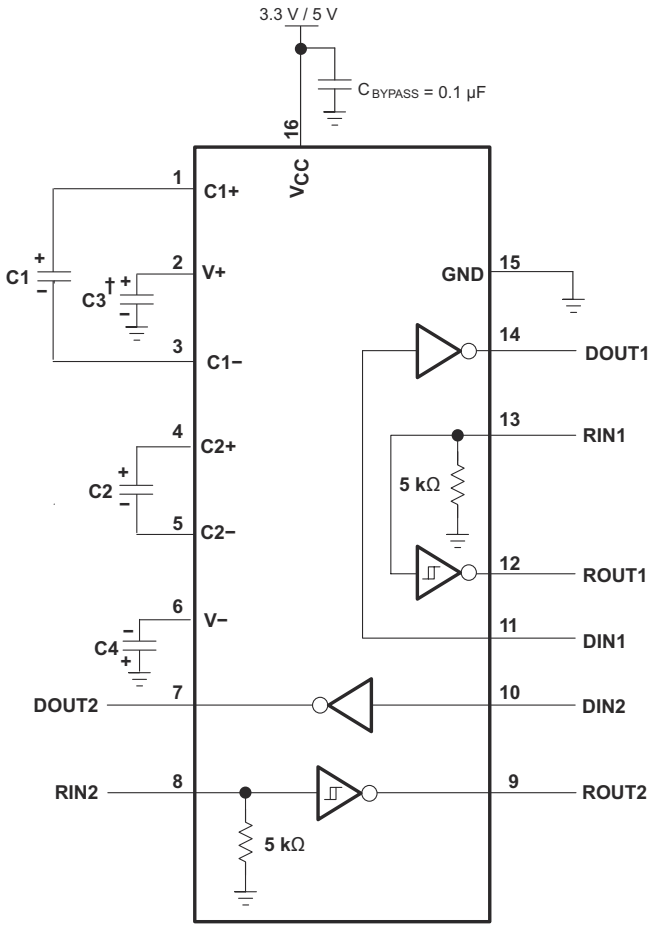

† C3 can be connected to V_{CC} or GND.

A. Resistor values shown are nominal.

B. Nonpolarized ceramic capacitors are acceptable. If polarized tantalum or electrolytic capacitors are used, they should be connected as shown.

Figure 9-1. Typical Operating Circuit and Capacitor Values

9.2.1 Design Requirements

- Recommended V_{CC} is 3.3 V or 5 V. 3 V to 5.5 V is also possible
- Maximum recommended bit rate is 250 kbit/s.

Table 9-1. V_{CC} vs Capacitor Values

V_{CC}	C1	C2, C3, C4
3.3 V ± 0.3 V	0.1 µF	0.1 µF
5 V ± 0.5 V	0.047 µF	0.33 µF
3 V to 5.5 V	0.1 µF	0.47 µF

9.2.2 Detailed Design Procedure

- All DIN, $\overline{\text{FORCEOFF}}$ and FORCEON inputs must be connected to valid low or high logic levels.
- Select capacitor values based on VCC level for best performance.

9.2.3 Application Curves

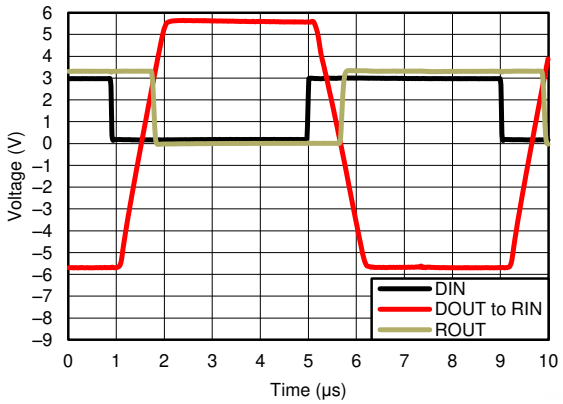

V_{CC} = 3.3 V

Figure 9-2. 250 kbit/s Driver to Receiver Loopback Timing Waveform

10 Power Supply Recommendations

V_{CC} should be between 3 V and 5.5 V. Charge pump capacitors should be chosen using table in Typical Operating Circuit and Capacitor Values.

Copyright © 2021 Texas Instruments Incorporated

11 Layout

11.1 Layout Guidelines

Keep the external capacitor traces short. This is more important on C1 and C2 nodes that have the fastest rise and fall times.

11.2 Layout Example

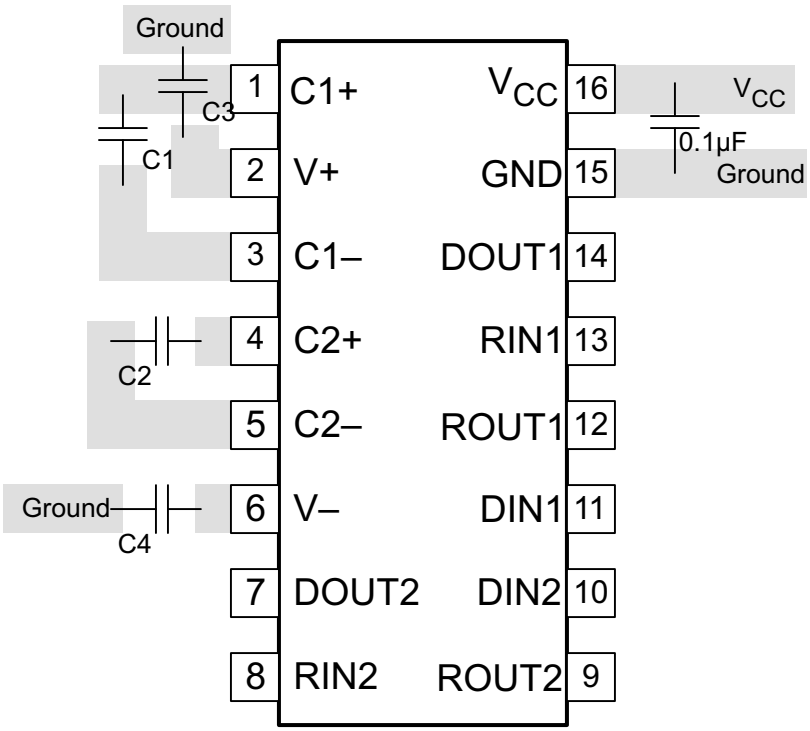

Figure 11-1. Layout Diagram

12 Device and Documentation Support

12.1 Receiving Notification of Documentation Updates

To receive notification of documentation updates, navigate to the device product folder on ti.com. Click on *Subscribe to updates* to register and receive a weekly digest of any product information that has changed. For change details, review the revision history included in any revised document.

12.2 Support Resources

TI E2E™ support forums are an engineer's go-to source for fast, verified answers and design help — straight from the experts. Search existing answers or ask your own question to get the quick design help you need.

Linked content is provided "AS IS" by the respective contributors. They do not constitute TI specifications and do not necessarily reflect TI's views; see TI's Terms of Use.

12.3 Trademarks

TI E2E™ is a trademark of Texas Instruments.
All trademarks are the property of their respective owners.

12.4 Electrostatic Discharge Caution

This integrated circuit can be damaged by ESD. Texas Instruments recommends that all integrated circuits be handled with appropriate precautions. Failure to observe proper handling and installation procedures can cause damage.

ESD damage can range from subtle performance degradation to complete device failure. Precision integrated circuits may be more susceptible to damage because very small parametric changes could cause the device not to meet its published specifications.

12.5 Glossary

TI Glossary	This glossary lists and explains terms, acronyms, and definitions.

13 Mechanical, Packaging, and Orderable Information

The following pages include mechanical packaging and orderable information. This information is the most current data available for the designated devices. This data is subject to change without notice and revision of this document. For browser based versions of this data sheet, refer to the left hand navigation.

Copyright © 2021 Texas Instruments Incorporated

PACKAGING INFORMATION

Orderable Device	Status (1)	Package Type	Package Drawing	Pins	Package Qty	Eco Plan (2)	Lead finish/ Ball material (6)	MSL Peak Temp (3)	Op Temp (°C)	Device Marking (4/5)	Samples
MAX3232CDBR	ACTIVE	SSOP	DB	16	2000	RoHS & Green	NIPDAU	Level-1-260C-UNLIM	0 to 70	MA3232C	Samples
MAX3232CDR	ACTIVE	SOIC	D	16	2500	RoHS & Green	NIPDAU	Level-1-260C-UNLIM	0 to 70	MAX3232C	Samples
MAX3232CDW	LIFEBUY	SOIC	DW	16	40	RoHS & Green	NIPDAU	Level-1-260C-UNLIM	0 to 70	MAX3232C	
MAX3232CDWG4	NRND	SOIC	DW	16	40	RoHS & Green	NIPDAU	Level-1-260C-UNLIM	0 to 70	MAX3232C	
MAX3232CDWR	LIFEBUY	SOIC	DW	16	2000	RoHS & Green	NIPDAU | SN	Level-1-260C-UNLIM	0 to 70	MAX3232C	
MAX3232CPWR	ACTIVE	TSSOP	PW	16	2000	RoHS & Green	NIPDAU	Level-1-260C-UNLIM	0 to 70	MA3232C	Samples
MAX3232CPWRE4	ACTIVE	TSSOP	PW	16	2000	RoHS & Green	NIPDAU	Level-1-260C-UNLIM	0 to 70	MA3232C	Samples
MAX3232CPWRG4	ACTIVE	TSSOP	PW	16	2000	RoHS & Green	NIPDAU	Level-1-260C-UNLIM	0 to 70	MA3232C	Samples
MAX3232IDBR	ACTIVE	SSOP	DB	16	2000	RoHS & Green	NIPDAU	Level-1-260C-UNLIM	-40 to 85	MB3232I	Samples
MAX3232IDBRE4	ACTIVE	SSOP	DB	16	2000	RoHS & Green	NIPDAU	Level-1-260C-UNLIM	-40 to 85	MB3232I	Samples
MAX3232IDW	LIFEBUY	SOIC	DW	16	40	RoHS & Green	NIPDAU	Level-1-260C-UNLIM	-40 to 85	MAX3232I	
MAX3232IDWR	ACTIVE	SOIC	DW	16	2000	RoHS & Green	NIPDAU | SN	Level-1-260C-UNLIM	-40 to 85	MAX3232I	Samples
MAX3232IDWRE4	NRND	SOIC	DW	16	2000	RoHS & Green	NIPDAU	Level-1-260C-UNLIM	-40 to 85	MAX3232I	
MAX3232IDWRG4	LIFEBUY	SOIC	DW	16	2000	RoHS & Green	NIPDAU	Level-1-260C-UNLIM	-40 to 85	MAX3232I	
MAX3232IPWR	ACTIVE	TSSOP	PW	16	2000	RoHS & Green	NIPDAU	Level-1-260C-UNLIM	-40 to 85	MB3232I	Samples
MAX3232IPWRE4	ACTIVE	TSSOP	PW	16	2000	RoHS & Green	NIPDAU	Level-1-260C-UNLIM	-40 to 85	MB3232I	Samples
MAX3232IPWRG4	ACTIVE	TSSOP	PW	16	2000	RoHS & Green	NIPDAU	Level-1-260C-UNLIM	-40 to 85	MB3232I	Samples

(1) The marketing status values are defined as follows:
ACTIVE: Product device recommended for new designs.
LIFEBUY: TI has announced that the device will be discontinued, and a lifetime-buy period is in effect.
NRND: Not recommended for new designs. Device is in production to support existing customers, but TI does not recommend using this part in a new design.
PREVIEW: Device has been announced but is not in production. Samples may or may not be available.
OBSOLETE: TI has discontinued the production of the device.

(2) **RoHS:** TI defines "RoHS" to mean semiconductor products that are compliant with the current EU RoHS requirements for all 10 RoHS substances, including the requirement that RoHS substance do not exceed 0.1% by weight in homogeneous materials. Where designed to be soldered at high temperatures, "RoHS" products are suitable for use in specified lead-free processes. TI may reference these types of products as "Pb-Free".
RoHS Exempt: TI defines "RoHS Exempt" to mean products that contain lead but are compliant with EU RoHS pursuant to a specific EU RoHS exemption.
Green: TI defines "Green" to mean the content of Chlorine (Cl) and Bromine (Br) based flame retardants meet JS709B low halogen requirements of <=1000ppm threshold. Antimony trioxide based flame retardants must also meet the <=1000ppm threshold requirement.

(3) MSL, Peak Temp. - The Moisture Sensitivity Level rating according to the JEDEC industry standard classifications, and peak solder temperature.

(4) There may be additional marking, which relates to the logo, the lot trace code information, or the environmental category on the device.

(5) Multiple Device Markings will be inside parentheses. Only one Device Marking contained in parentheses and separated by a "~" will appear on a device. If a line is indented then it is a continuation of the previous line and the two combined represent the entire Device Marking for that device.

(6) Lead finish/Ball material - Orderable Devices may have multiple material finish options. Finish options are separated by a vertical ruled line. Lead finish/Ball material values may wrap to two lines if the finish value exceeds the maximum column width.

Important Information and Disclaimer: The information provided on this page represents TI's knowledge and belief as of the date that it is provided. TI bases its knowledge and belief on information provided by third parties, and makes no representation or warranty as to the accuracy of such information. Efforts are underway to better integrate information from third parties. TI has taken and continues to take reasonable steps to provide representative and accurate information but may not have conducted destructive testing or chemical analysis on incoming materials and chemicals. TI and TI suppliers consider certain information to be proprietary, and thus CAS numbers and other limited information may not be available for release.

In no event shall TI's liability arising out of such information exceed the total purchase price of the TI part(s) at issue in this document sold by TI to Customer on an annual basis.

OTHER QUALIFIED VERSIONS OF MAX3232 :

- Enhanced Product : MAX3232-EP

NOTE: Qualified Version Definitions:

- Enhanced Product - Supports Defense, Aerospace and Medical Applications

TAPE AND REEL INFORMATION

REEL DIMENSIONS

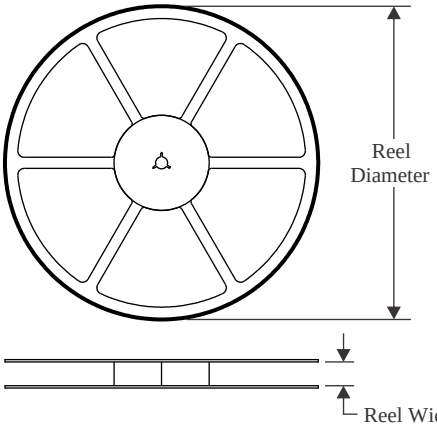

TAPE DIMENSIONS

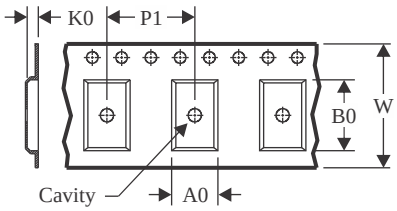

A0	Dimension designed to accommodate the component width
B0	Dimension designed to accommodate the component length
K0	Dimension designed to accommodate the component thickness
W	Overall width of the carrier tape
P1	Pitch between successive cavity centers

QUADRANT ASSIGNMENTS FOR PIN 1 ORIENTATION IN TAPE

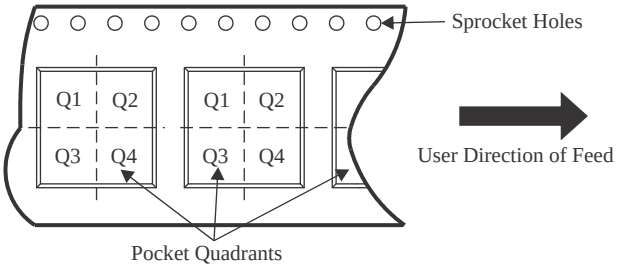

*All dimensions are nominal

Device	Package Type	Package Drawing	Pins	SPQ	Reel Diameter (mm)	Reel Width W1 (mm)	A0 (mm)	B0 (mm)	K0 (mm)	P1 (mm)	W (mm)	Pin1 Quadrant
MAX3232CDBR	SSOP	DB	16	2000	330.0	16.4	8.35	6.6	2.4	12.0	16.0	Q1
MAX3232CDR	SOIC	D	16	2500	330.0	16.4	6.5	10.3	2.1	8.0	16.0	Q1
MAX3232CDWR	SOIC	DW	16	2000	330.0	16.4	10.75	10.7	2.7	12.0	16.0	Q1
MAX3232CPWR	TSSOP	PW	16	2000	330.0	12.4	6.9	5.6	1.6	8.0	12.0	Q1
MAX3232CPWR	TSSOP	PW	16	2000	330.0	12.4	6.9	5.6	1.6	8.0	12.0	Q1
MAX3232CPWRG4	TSSOP	PW	16	2000	330.0	12.4	6.9	5.6	1.6	8.0	12.0	Q1
MAX3232IDBR	SSOP	DB	16	2000	330.0	16.4	8.35	6.6	2.4	12.0	16.0	Q1
MAX3232IDWR	SOIC	DW	16	2000	330.0	16.4	10.75	10.7	2.7	12.0	16.0	Q1
MAX3232IDWRG4	SOIC	DW	16	2000	330.0	16.4	10.75	10.7	2.7	12.0	16.0	Q1
MAX3232IPWR	TSSOP	PW	16	2000	330.0	12.4	6.9	5.6	1.6	8.0	12.0	Q1
MAX3232IPWR	TSSOP	PW	16	2000	330.0	12.4	6.9	5.6	1.6	8.0	12.0	Q1
MAX3232IPWRG4	TSSOP	PW	16	2000	330.0	12.4	6.9	5.6	1.6	8.0	12.0	Q1
MAX3232IPWRG4	TSSOP	PW	16	2000	330.0	12.4	6.9	5.6	1.6	8.0	12.0	Q1

TAPE AND REEL BOX DIMENSIONS

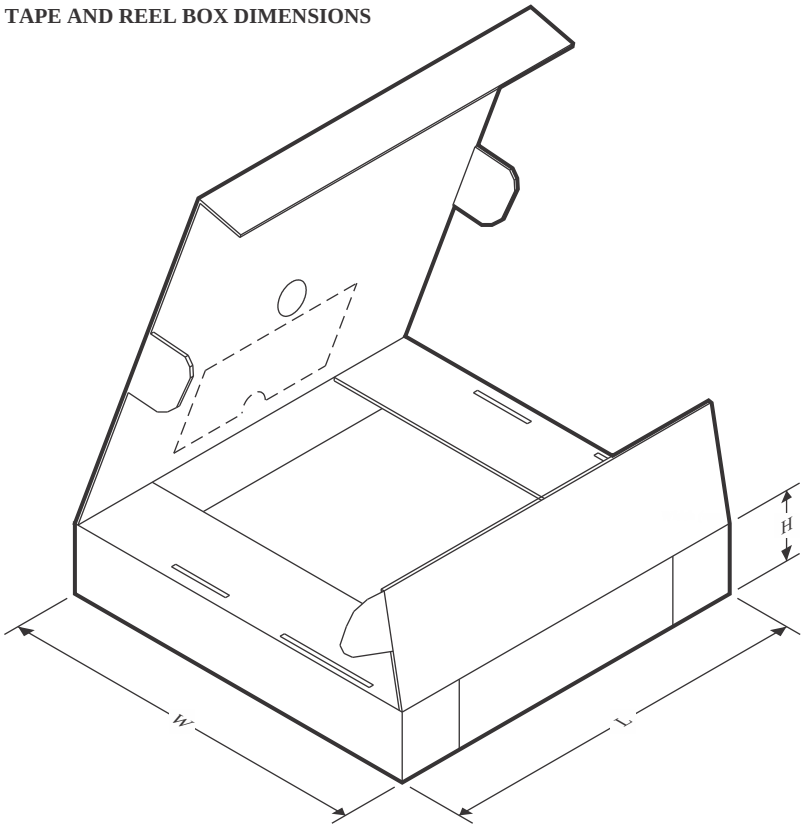

*All dimensions are nominal

Device	Package Type	Package Drawing	Pins	SPQ	Length (mm)	Width (mm)	Height (mm)
MAX3232CDBR	SSOP	DB	16	2000	356.0	356.0	35.0
MAX3232CDR	SOIC	D	16	2500	356.0	356.0	35.0
MAX3232CDWR	SOIC	DW	16	2000	350.0	350.0	43.0
MAX3232CPWR	TSSOP	PW	16	2000	356.0	356.0	35.0
MAX3232CPWR	TSSOP	PW	16	2000	356.0	356.0	35.0
MAX3232CPWRG4	TSSOP	PW	16	2000	356.0	356.0	35.0
MAX3232IDBR	SSOP	DB	16	2000	356.0	356.0	35.0
MAX3232IDWR	SOIC	DW	16	2000	350.0	350.0	43.0
MAX3232IDWRG4	SOIC	DW	16	2000	350.0	350.0	43.0
MAX3232IPWR	TSSOP	PW	16	2000	356.0	356.0	35.0
MAX3232IPWR	TSSOP	PW	16	2000	356.0	356.0	35.0
MAX3232IPWRG4	TSSOP	PW	16	2000	356.0	356.0	35.0
MAX3232IPWRG4	TSSOP	PW	16	2000	356.0	356.0	35.0

TUBE

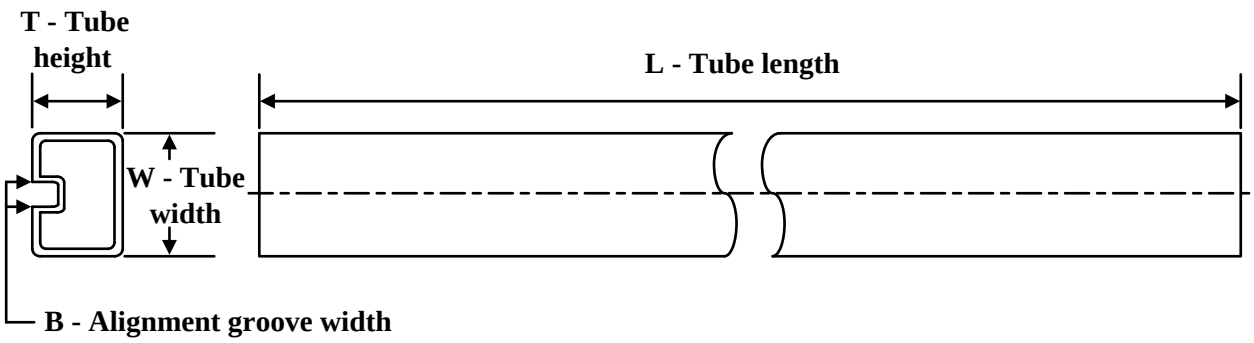

*All dimensions are nominal

Device	Package Name	Package Type	Pins	SPQ	L (mm)	W (mm)	T (µm)	B (mm)
MAX3232CDW	DW	SOIC	16	40	506.98	12.7	4826	6.6
MAX3232CDWG4	DW	SOIC	16	40	506.98	12.7	4826	6.6
MAX3232IDW	DW	SOIC	16	40	506.98	12.7	4826	6.6

GENERIC PACKAGE VIEW

DW 16

SOIC - 2.65 mm max height

7.5 x 10.3, 1.27 mm pitch

SMALL OUTLINE INTEGRATED CIRCUIT

This image is a representation of the package family, actual package may vary.
Refer to the product data sheet for package details.

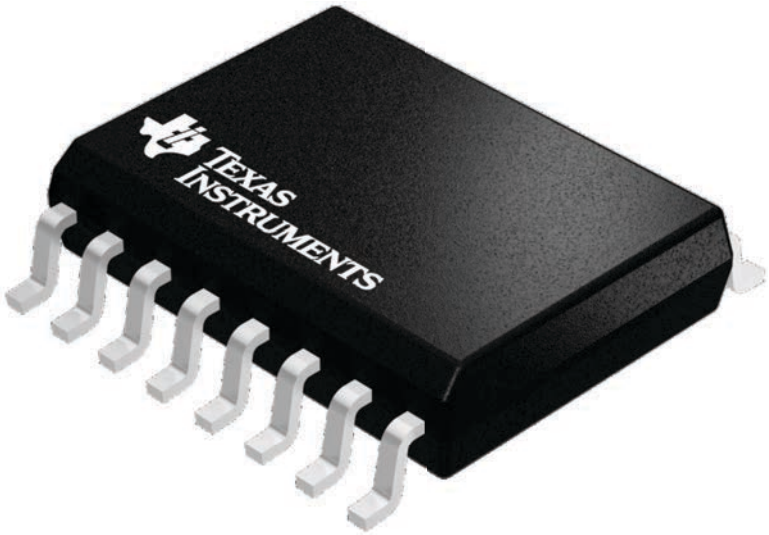

4224780/A

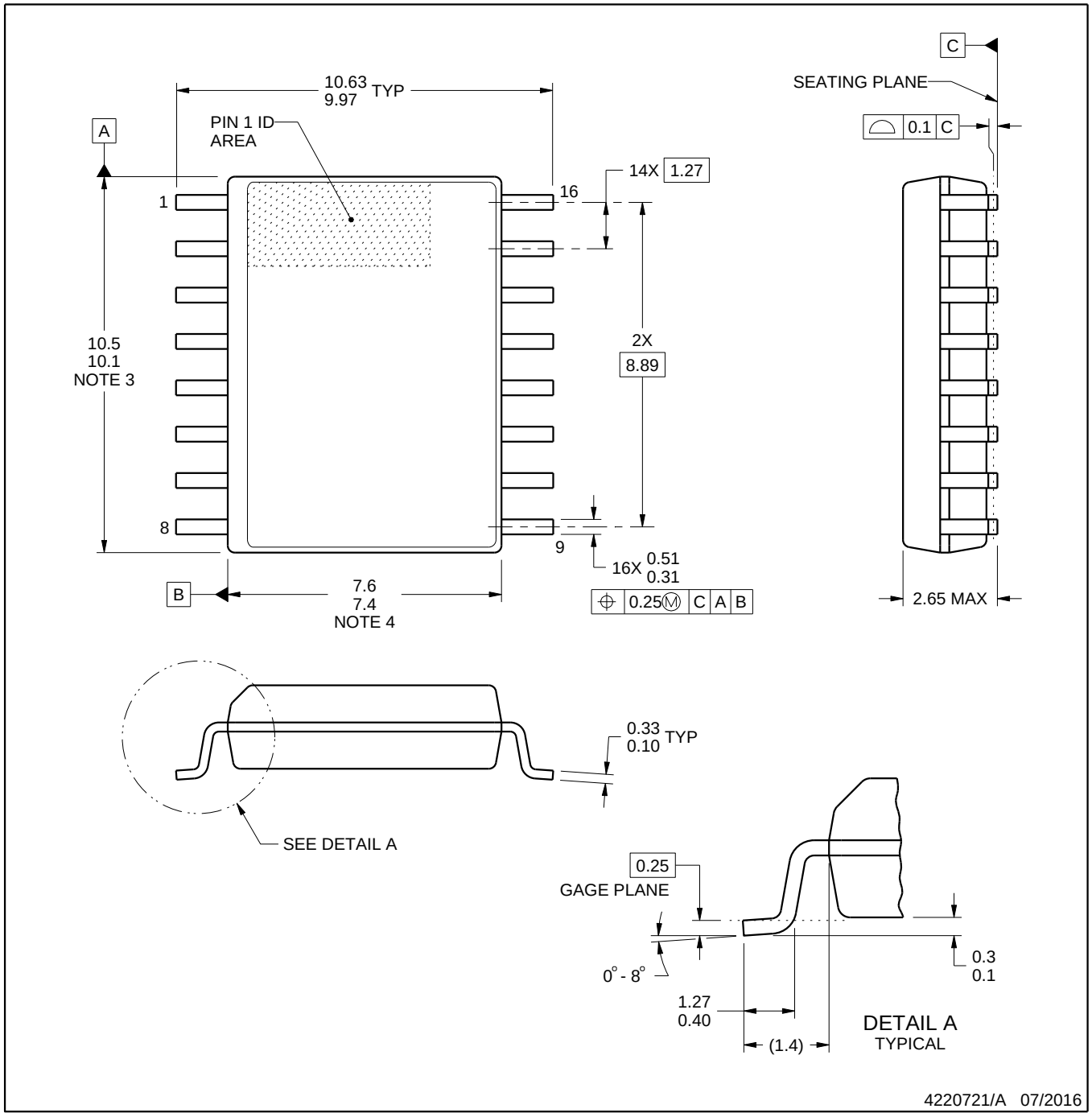

NOTES:

1. All linear dimensions are in millimeters. Dimensions in parenthesis are for reference only. Dimensioning and tolerancing per ASME Y14.5M.
2. This drawing is subject to change without notice.
3. This dimension does not include mold flash, protrusions, or gate burrs. Mold flash, protrusions, or gate burrs shall not exceed 0.15 mm, per side.
4. This dimension does not include interlead flash. Interlead flash shall not exceed 0.25 mm, per side.
5. Reference JEDEC registration MS-013.

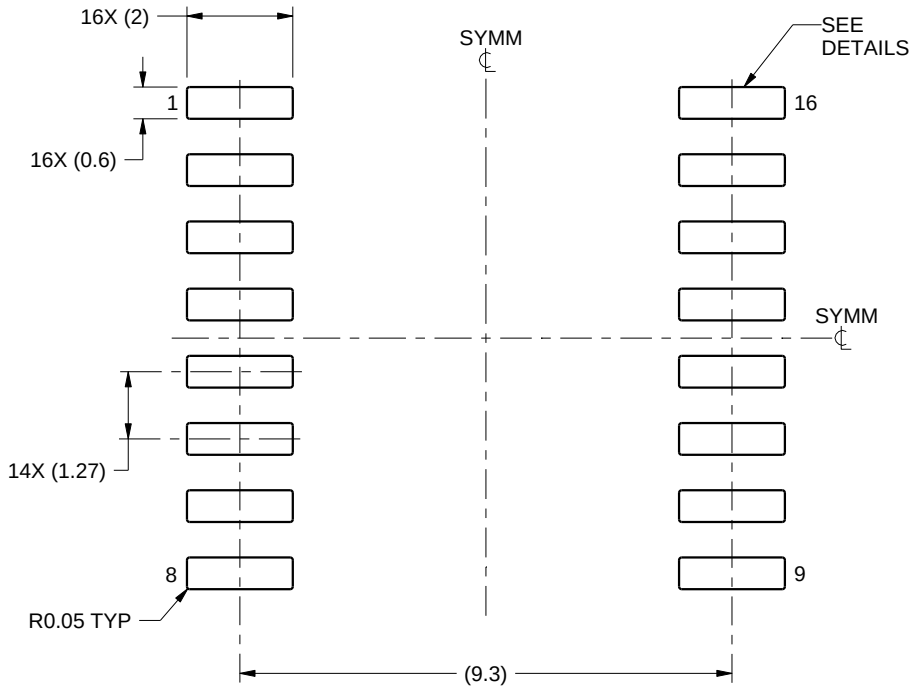

LAND PATTERN EXAMPLE
SCALE:7X

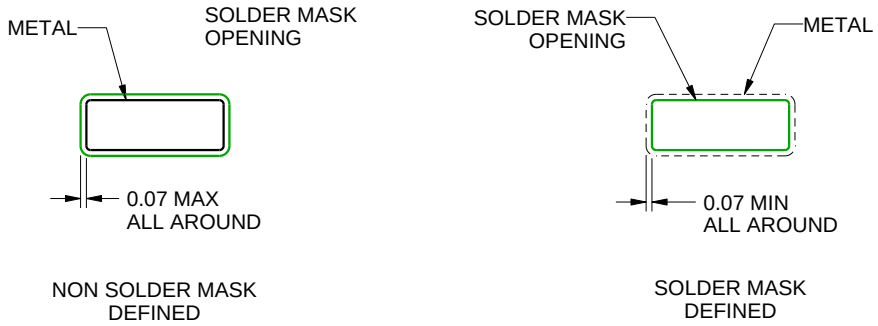

SOLDER MASK DETAILS

4220721/A 07/2016

NOTES: (continued)

6. Publication IPC-7351 may have alternate designs.
7. Solder mask tolerances between and around signal pads can vary based on board fabrication site.

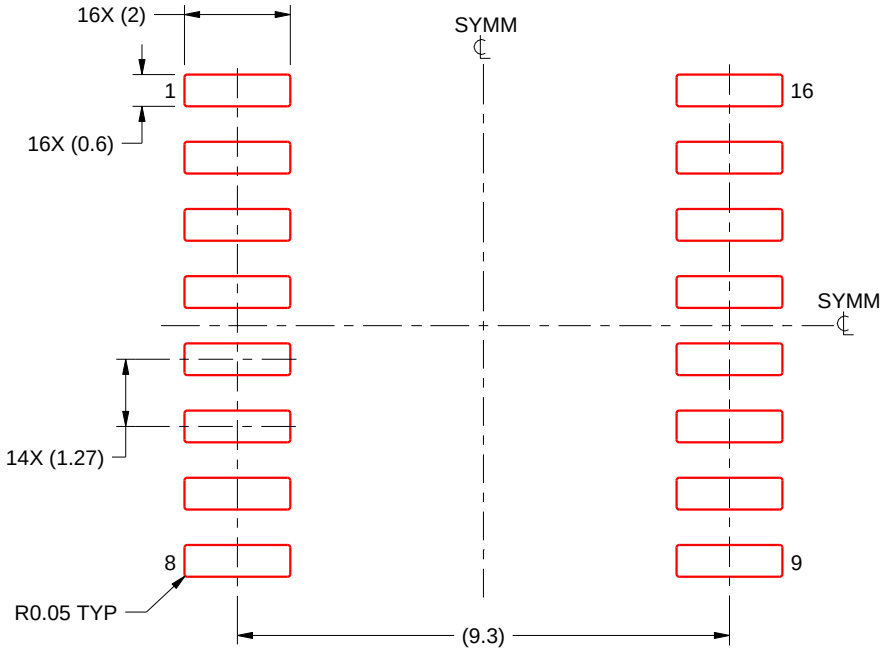

SOLDER PASTE EXAMPLE
BASED ON 0.125 mm THICK STENCIL
SCALE:7X

4220721/A 07/2016

NOTES: (continued)

8. Laser cutting apertures with trapezoidal walls and rounded corners may offer better paste release. IPC-7525 may have alternate design recommendations.
9. Board assembly site may have different recommendations for stencil design.

D (R–PDSO–G16) PLASTIC SMALL OUTLINE

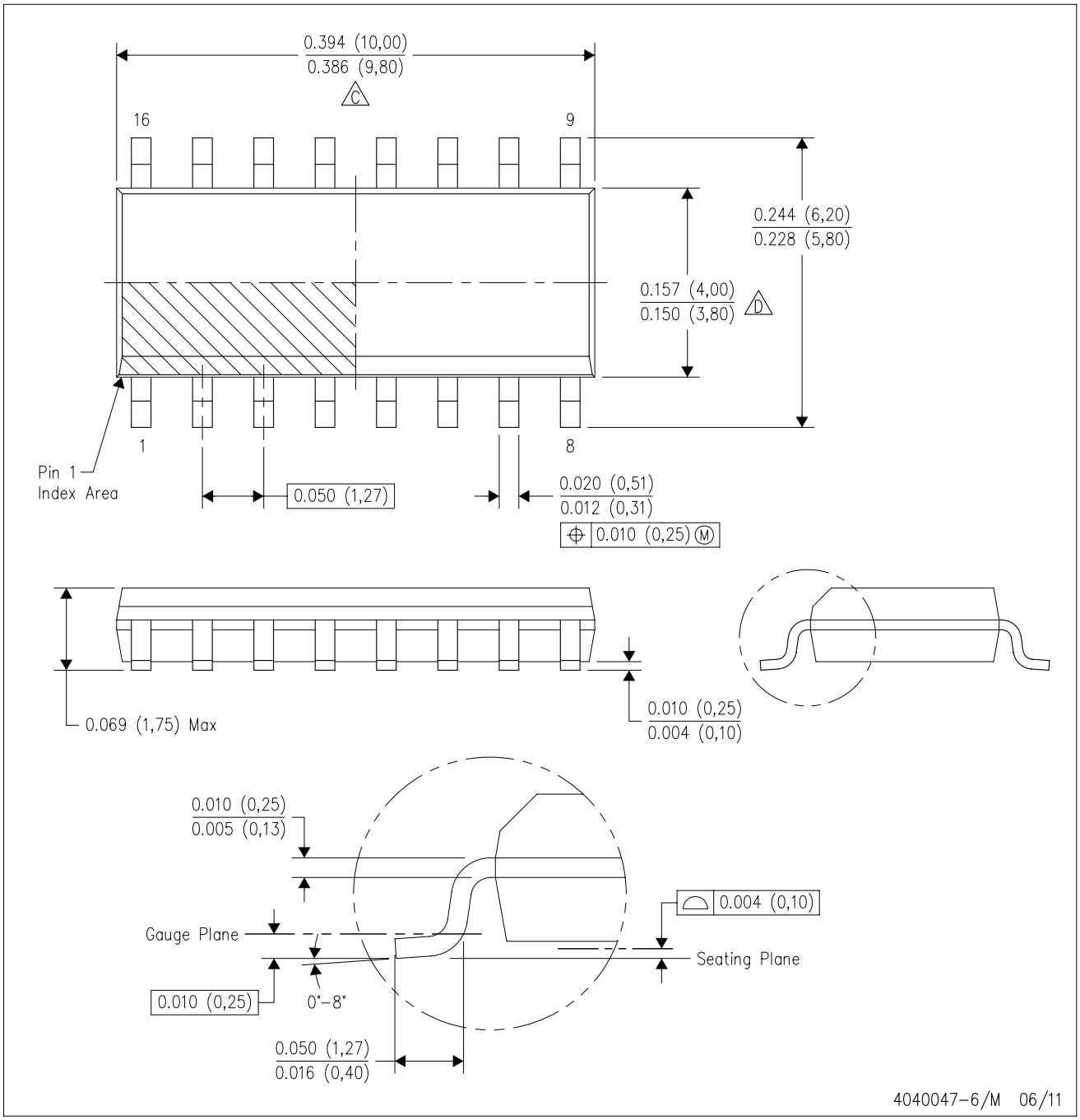

NOTES:
A. All linear dimensions are in inches (millimeters).
B. This drawing is subject to change without notice.
C. Body length does not include mold flash, protrusions, or gate burrs. Mold flash, protrusions, or gate burrs shall not exceed 0.006 (0,15) each side.
D. Body width does not include interlead flash. Interlead flash shall not exceed 0.017 (0,43) each side.
E. Reference JEDEC MS–012 variation AC.

PW0016A

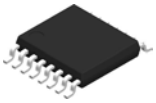

PACKAGE OUTLINE

TSSOP - 1.2 mm max height

SMALL OUTLINE PACKAGE

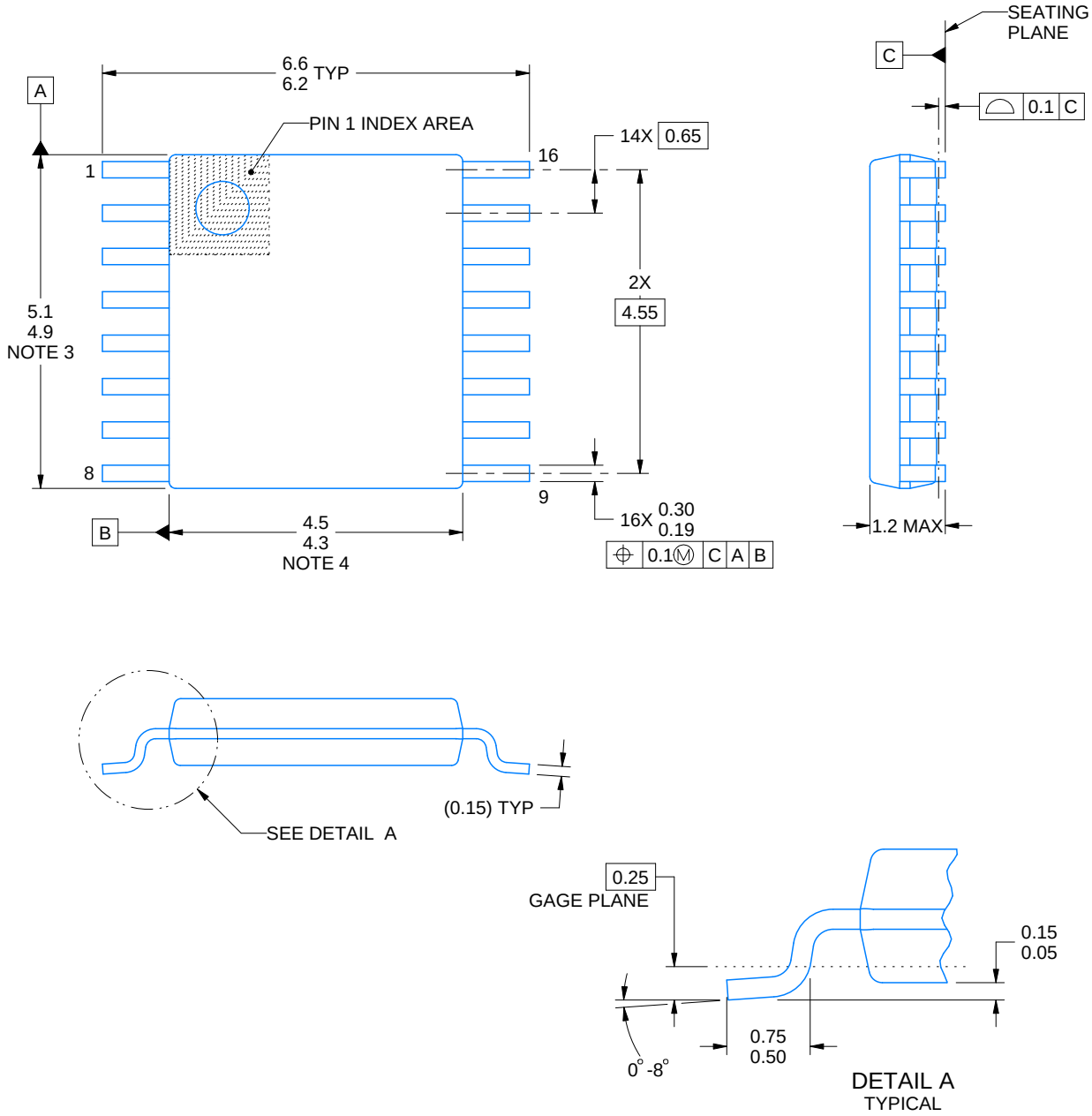

NOTES:

1. All linear dimensions are in millimeters. Any dimensions in parenthesis are for reference only. Dimensioning and tolerancing per ASME Y14.5M.
2. This drawing is subject to change without notice.
3. This dimension does not include mold flash, protrusions, or gate burrs. Mold flash, protrusions, or gate burrs shall not exceed 0.15 mm per side.
4. This dimension does not include interlead flash. Interlead flash shall not exceed 0.25 mm per side.
5. Reference JEDEC registration MO-153.

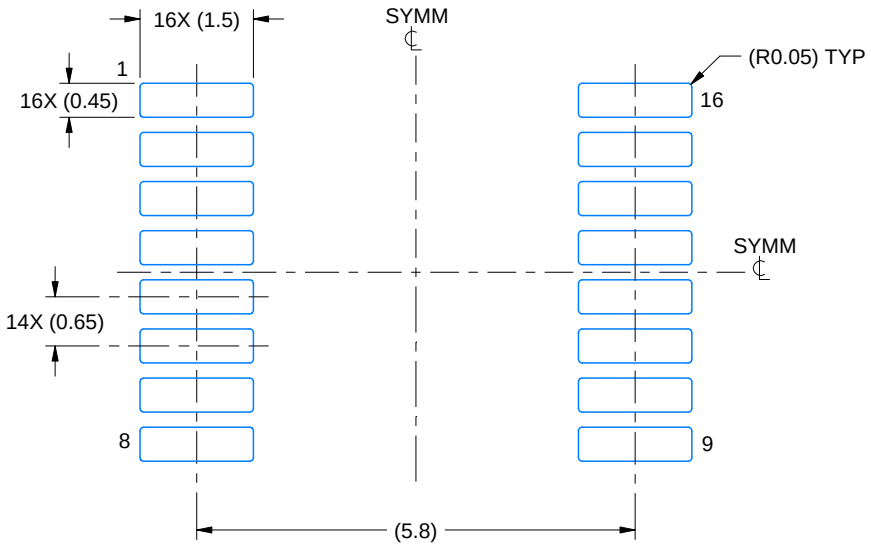

LAND PATTERN EXAMPLE
EXPOSED METAL SHOWN
SCALE: 10X

NON-SOLDER MASK DEFINED (PREFERRED)

SOLDER MASK DEFINED

SOLDER MASK DETAILS

4220204/A 02/2017

NOTES: (continued)

6. Publication IPC-7351 may have alternate designs.
7. Solder mask tolerances between and around signal pads can vary based on board fabrication site.

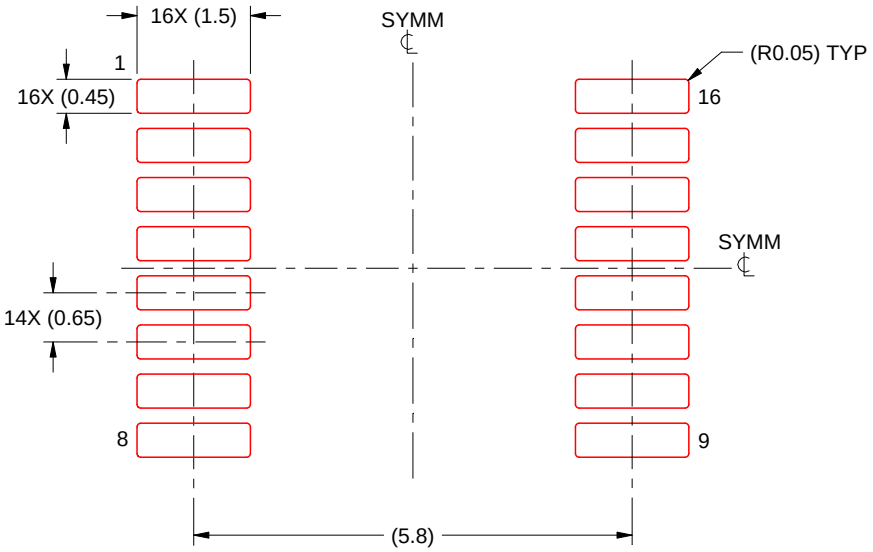

SOLDER PASTE EXAMPLE
BASED ON 0.125 mm THICK STENCIL
SCALE: 10X

4220204/A 02/2017

NOTES: (continued)

8. Laser cutting apertures with trapezoidal walls and rounded corners may offer better paste release. IPC-7525 may have alternate design recommendations.
9. Board assembly site may have different recommendations for stencil design.

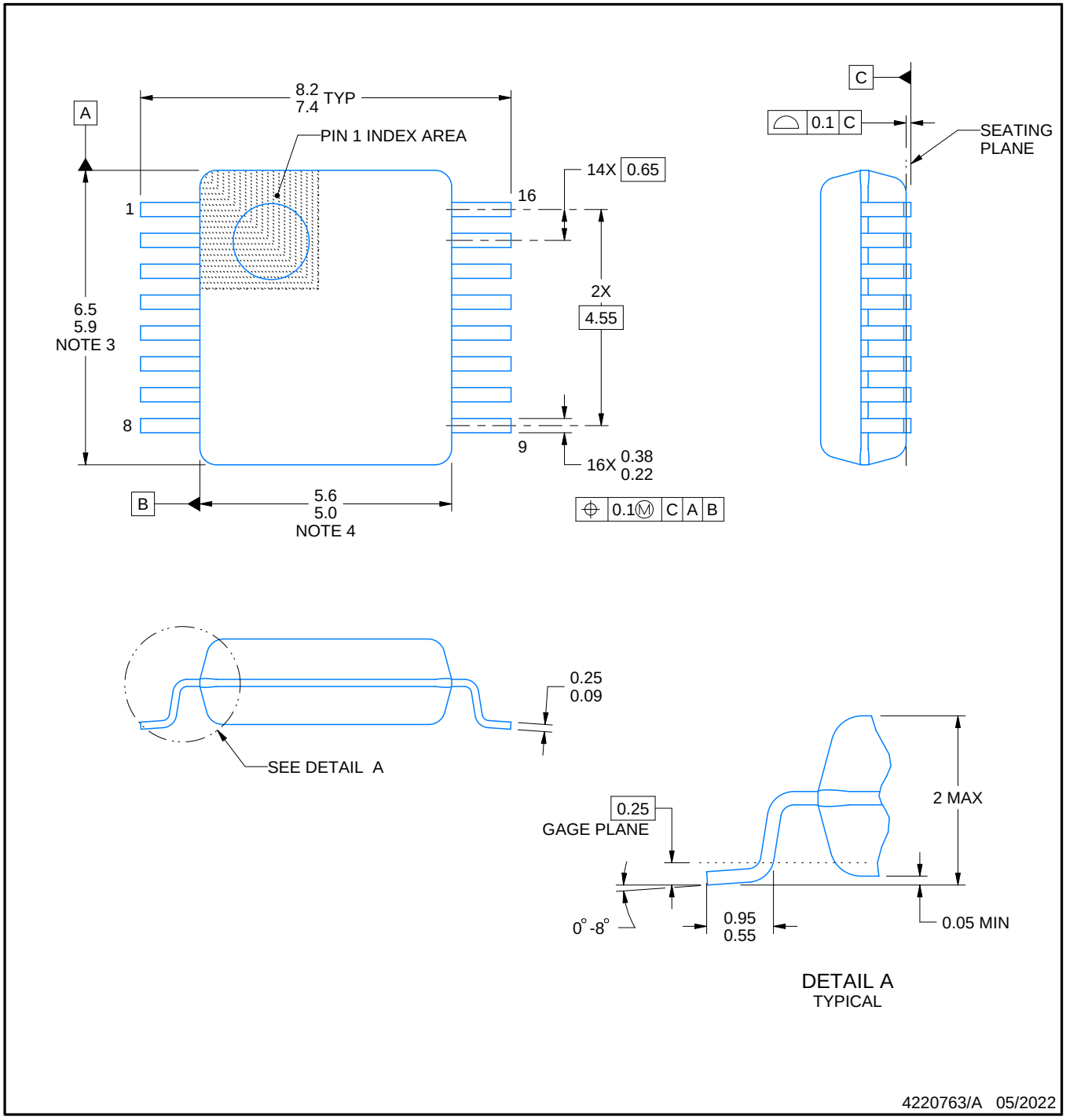

NOTES:

1. All linear dimensions are in millimeters. Any dimensions in parenthesis are for reference only. Dimensioning and tolerancing per ASME Y14.5M.
2. This drawing is subject to change without notice.
3. This dimension does not include mold flash, protrusions, or gate burrs. Mold flash, protrusions, or gate burrs shall not exceed 0.15 mm per side.
4. Reference JEDEC registration MO-150.

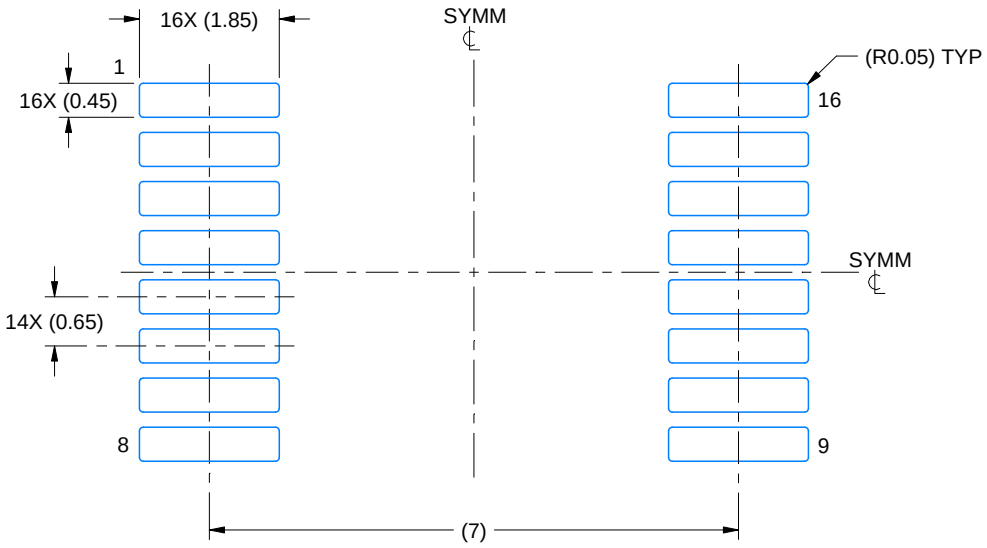

LAND PATTERN EXAMPLE
EXPOSED METAL SHOWN
SCALE: 10X

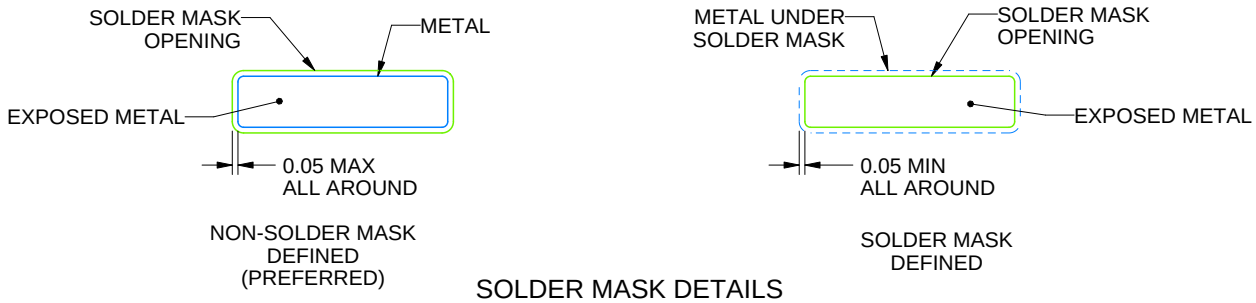

SOLDER MASK DETAILS

4220763/A 05/2022

NOTES: (continued)

5. Publication IPC-7351 may have alternate designs.
6. Solder mask tolerances between and around signal pads can vary based on board fabrication site.

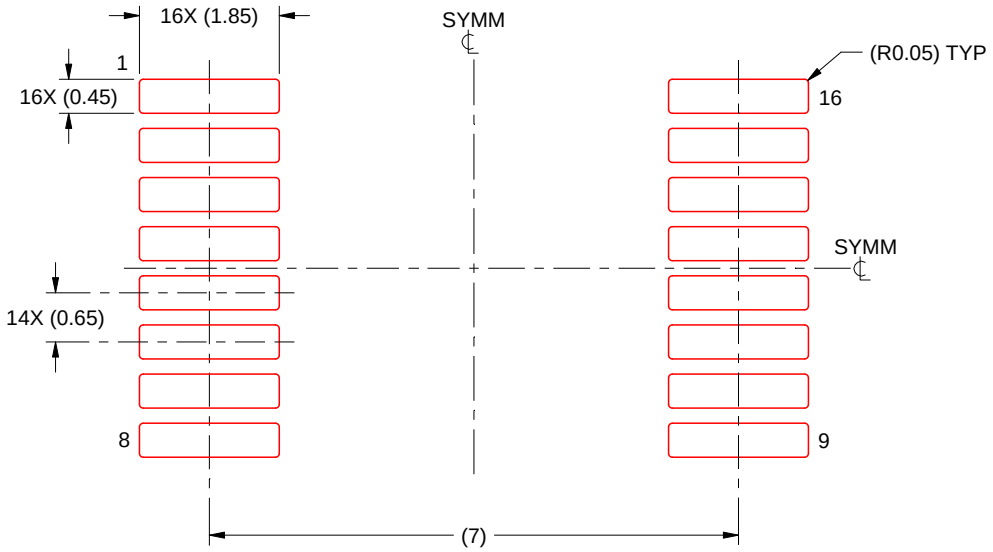

SOLDER PASTE EXAMPLE
BASED ON 0.125 mm THICK STENCIL
SCALE: 10X

4220763/A 05/2022

NOTES: (continued)

7. Laser cutting apertures with trapezoidal walls and rounded corners may offer better paste release. IPC-7525 may have alternate design recommendations.
8. Board assembly site may have different recommendations for stencil design.

IMPORTANT NOTICE AND DISCLAIMER

TI PROVIDES TECHNICAL AND RELIABILITY DATA (INCLUDING DATA SHEETS), DESIGN RESOURCES (INCLUDING REFERENCE DESIGNS), APPLICATION OR OTHER DESIGN ADVICE, WEB TOOLS, SAFETY INFORMATION, AND OTHER RESOURCES “AS IS” AND WITH ALL FAULTS, AND DISCLAIMS ALL WARRANTIES, EXPRESS AND IMPLIED, INCLUDING WITHOUT LIMITATION ANY IMPLIED WARRANTIES OF MERCHANTABILITY, FITNESS FOR A PARTICULAR PURPOSE OR NON-INFRINGEMENT OF THIRD PARTY INTELLECTUAL PROPERTY RIGHTS.

These resources are intended for skilled developers designing with TI products. You are solely responsible for (1) selecting the appropriate TI products for your application, (2) designing, validating and testing your application, and (3) ensuring your application meets applicable standards, and any other safety, security, regulatory or other requirements.

These resources are subject to change without notice. TI grants you permission to use these resources only for development of an application that uses the TI products described in the resource. Other reproduction and display of these resources is prohibited. No license is granted to any other TI intellectual property right or to any third party intellectual property right. TI disclaims responsibility for, and you will fully indemnify TI and its representatives against, any claims, damages, costs, losses, and liabilities arising out of your use of these resources.

TI’s products are provided subject to TI’s Terms of Sale or other applicable terms available either on ti.com or provided in conjunction with such TI products. TI’s provision of these resources does not expand or otherwise alter TI’s applicable warranties or warranty disclaimers for TI products.

TI objects to and rejects any additional or different terms you may have proposed.

Mailing Address: Texas Instruments, Post Office Box 655303, Dallas, Texas 75265
Copyright © 2024, Texas Instruments Incorporated

Looking for pricing, stock, or lifecycle information?

Click below to explore more details on WIN SOURCE:

- View MAX3232CDRG4 on WIN SOURCE
- Texas Instruments Information

Optimize Your Supply Chain with WIN SOURCE Solutions

- Global Sourcing Solution
- Obsolete Management
- Cost Control Management
- Shortage Management
- Alternative Solution
- Excess Inventory Management