THE DATASHEET OF

MAX1910EUB+T

www.win-source.net 0086-755-83957316

19-2290; Rev 2; 3/04

EVALUATION KIT AVAILABLE

1.5x/2x High-Efficiency White LED Charge Pumps

MAX1910/MAX1912

General Description

The MAX1910/MAX1912 power LEDs with a regulated output voltage or current (up to 120mA) from an unregulated input supply (2.7V to 5.3V). These are complete DC-DC converters requiring only four small ceramic capacitors and no inductors. Input ripple is minimized by a unique regulation scheme that maintains a fixed 750kHz switching frequency over a wide load range. Also included are logic-level shutdown and soft-start to reduce input current surges at startup.

The MAX1910 has two automatically selected operating modes: 1.5x and 2x. 1.5x mode improves efficiency at higher input voltages, while 2x mode maintains regulation at lower input voltages. The MAX1912 operates only in 1.5x mode.

The MAX1910 and the MAX1912 are available in a space-saving 10-pin µMAX package.

Features

- ♦ **High-Efficiency 1.5x/2x Charge Pumps**
- ♦ **Low Input Ripple with 750kHz Operation**
- ♦ **200mV Current-Sense Threshold Reduces Power Loss**
- ♦ **Current- or Voltage-Regulated Charge Pump**
- ♦ **Up to 120mA Output Current**
- ♦ **No Inductors Required**
- ♦ **Small Ceramic Capacitors**
- ♦ **Regulated ±5% LED Current**
- ♦ **Load Disconnected in Shutdown**
- ♦ **1µA Shutdown Current**
- ♦ **Small 10-Pin µMAX Package**

Applications

White LED Backlighting

Cellular Phones

PDAs

Digital Still Cameras

MP3 Players

Backup-Battery Boost Converters

Ordering Information

PART	TEMP RANGE	PIN-PACKAGE
MAX1910EUB	-40°C to +85°C	10 µMAX
MAX1912EUB	-40°C to +85°C	10 µMAX

Typical Operating Circuit

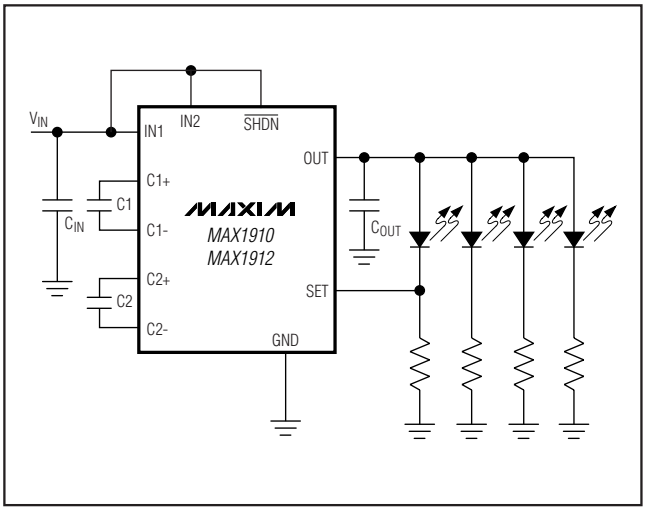

Pin Configuration

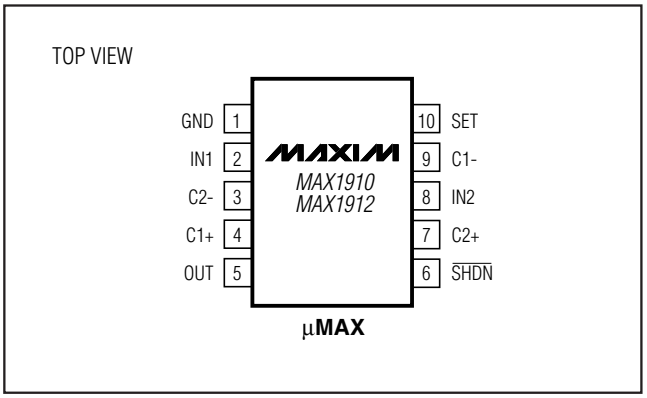

For pricing, delivery, and ordering information, please contact Maxim Direct at 1-888-629-4642, or visit Maxim's website at www.maxim-ic.com.

1.5x/2x High-Efficiency White LED Charge Pumps

ABSOLUTE MAXIMUM RATINGS

IN1, IN2, OUT, $\overline{SHDN}$, SET to GND .....-0.3V to +6V
C1-, C2-, to GND.....-0.3V, V_{IN} + 1V
C1+, C2+ to GND.....-0.3V, greater of V_{OUT} + 1V or V_{IN} + 1V
OUT Short-Circuit to GND.....Continuous

Continuous Power Dissipation (T_A = +70°C)
10-Pin µMAX (derate 5.6 mW/°C above +70°C).....444mW
Operating Temperature Range .....-40°C to +85°C
Storage Temperature Range .....-65°C to +150°C
Lead Temperature (soldering, 10s) ..... +300°C

Stresses beyond those listed under "Absolute Maximum Ratings" may cause permanent damage to the device. These are stress ratings only, and functional operation of the device at these or any other conditions beyond those indicated in the operational sections of the specifications is not implied. Exposure to absolute maximum rating conditions for extended periods may affect device reliability.

ELECTRICAL CHARACTERISTICS

(V_{IN} = 3.6V, GND = 0, $\overline{SHDN}$ = SET = IN, C_{IN} = 2.2µF, C1 = C2 = 0.47µF, C_{OUT} = 2.2µF, **T_A = 0°C to +85°C**. Typical values are at T_A = +25°C, unless otherwise noted.)

PARAMETER	CONDITIONS	MIN	TYP	MAX	UNITS
Input Voltage Operating Range		2.7		5.3	V
Undervoltage Lockout Threshold	Both rising and falling edges	2.2		2.5	V
Undervoltage Lockout Hysteresis			35		mV
SET Regulation Point		0.19	0.2	0.21	V
MAX1910 Current Regulation	Output current change for 2.7V < V_{OUT} < 5V		0.5		%/V
MAX1912 Current Regulation	Output current change for 3V < V_{OUT} < 5V		0.5		%/V
Maximum Output Current	MAX1910 V_{IN} = 2.7V	80			mA
	MAX1912 V_{IN} = 3.6V	120			
No Load Input Current	V_{IN} = 3.6V		1.5	2.5	mA
Supply Current in Shutdown	V_{IN} = 5.3V, V_{OUT} = 0, $\overline{SHDN}$ = 0		0.1	10	µA
Output Leakage Current in Shutdown	V_{IN} = 3.6V, $\overline{SHDN}$ = 0		0.1	10	µA
Switching Frequency	V_{IN} = 3.6V	625	750	875	kHz
Switching Frequency Temperature Coefficient	f = 750kHz		250		ppm/°C
SET Input Current			1	100	nA
$\overline{SHDN}$ Input Current	$\overline{SHDN}$ = 0 or 5.5V			1	µA
$\overline{SHDN}$ Input Voltage Low	2.7V < V_{IN} < 5.3V			0.4	V
$\overline{SHDN}$ Input Voltage High	2.7V < V_{IN} < 5.3V	1.6			V
Thermal-Shutdown Threshold	Rising temperature, 15°C hysteresis typical		160		°C

ELECTRICAL CHARACTERISTICS

(V_{IN} = 3.6V, GND = 0, $\overline{SHDN}$ = SET = IN, C_{IN} = 2.2µF, C1 = C2 = 0.47µF, C_{OUT} = 2.2µF, **T_A = -40°C to +85°C**, unless otherwise noted.) (Note 1)

PARAMETER	CONDITIONS	MIN	MAX	UNITS
Input Voltage Operating Range		2.7	5.3	V
Undervoltage Lockout Threshold	Both rising and falling edges	2.2	2.5	V
Maximum Output Current	MAX1910 V_{IN} = 2.7V	80		mA
	MAX1910 V_{IN} = 3.6V	120		
Supply Current in Shutdown	V_{IN} = 5.3V, V_{OUT} = 0, $\overline{SHDN}$ = 0		10	µA

ELECTRICAL CHARACTERISTICS (continued)

(V_{IN} = 3.6V, GND = 0, $\overline{SHDN}$ = SET = IN, C_{IN} = 2.2µF, C1 = C2 = 0.47µF, C_{OUT} = 2.2µF, **T_A = -40°C to +85°C**, unless otherwise noted.) (Note 1)

PARAMETER	CONDITIONS	MIN	MAX	UNITS
Output Leakage Current in Shutdown	V_{IN} = 3.6V, $\overline{SHDN}$ = 0		10	µA
SET Regulation Point		0.19	0.21	V
SET Input Current			100	nA
$\overline{SHDN}$ Input Current	$\overline{SHDN}$ = 0 or 5.5V		1	µA
$\overline{SHDN}$ Input Voltage Low	2.7V < V_{IN} < 5.3V		0.4	V
$\overline{SHDN}$ Input Voltage High	2.7V < V_{IN} < 5.3V	1.6		V

Note 1: Limits to -40°C are guaranteed by design, not production tested.

Typical Operating Characteristics

(Circuit of Figure 2, V_{IN} = 3.3V, T_A = +25°C, unless otherwise noted.)

INPUT AND OUTPUT VOLTAGE RIPPLE

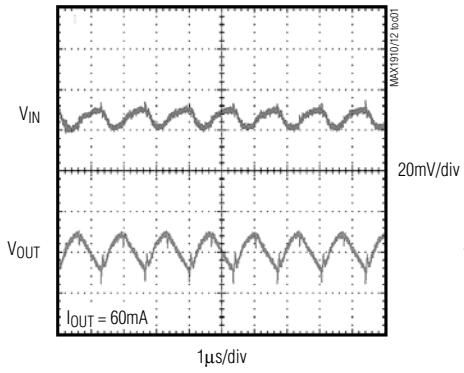

INPUT AND OUTPUT VOLTAGE RIPPLE

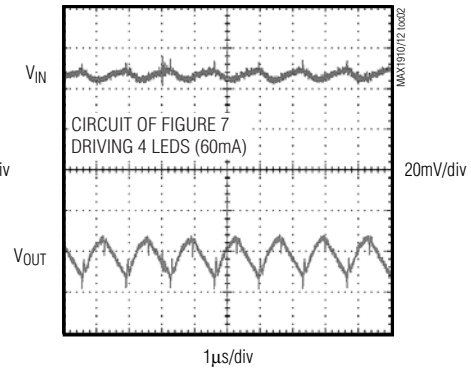

START-UP INPUT CURRENT AND OUTPUT VOLTAGE

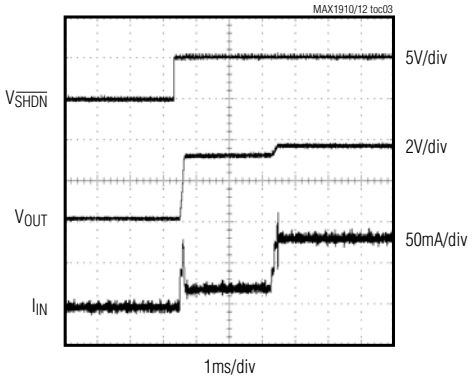

QUIESCENT CURRENT vs. INPUT VOLTAGE

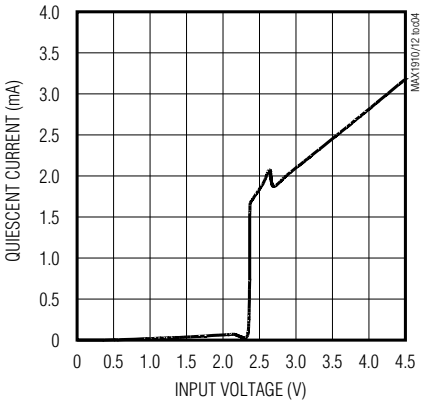

LED CURRENT vs. INPUT VOLTAGE

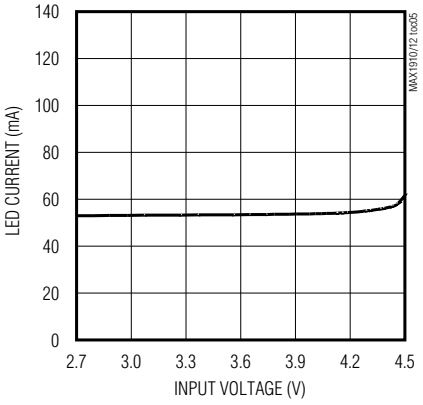

INTENSITY CHANGE STEP RESPONSE

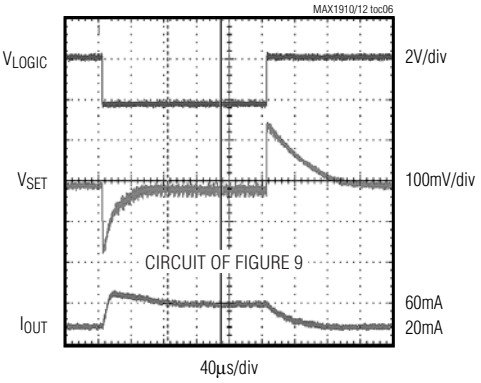

1.5x/2x High-Efficiency White LED Charge Pumps

Typical Operating Characteristics (continued)

(Circuit of Figure 2, V_{IN} = 3.3V, T_A = +25°C, unless otherwise noted.)

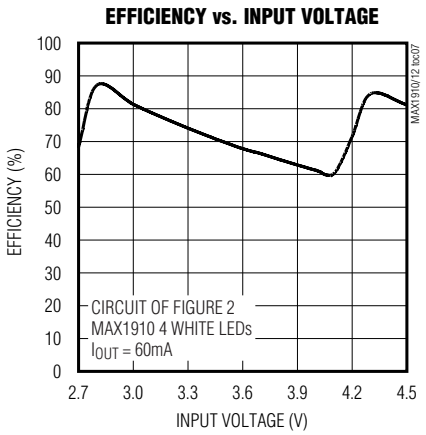

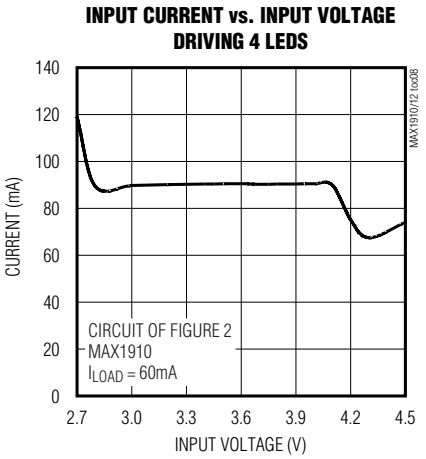

Pin Description

PIN	NAME	FUNCTION
1	GND	Ground
2	IN1	Supply Voltage Input. Connect to IN2. Bypass to GND with a 2.2µF ceramic capacitor.
3	C2-	Transfer Capacitor 2 Connection, Negative Side
4	C1+	Transfer Capacitor 1 Connection, Positive Side
5	OUT	Output. Bypass to GND with a 2.2µF ceramic capacitor.
6	$\overline{SHDN}$	Shutdown Input. Drive low to turn off the device and disconnect the load from the input. OUT is high impedance in shutdown. Drive high or connect to IN for normal operation.
7	C2+	Transfer Capacitor 2 Connection, Positive Side
8	IN2	Supply Voltage Input. Connect to IN1.
9	C1-	Transfer Capacitor 1 Connection, Negative Side
10	SET	SET programs the output current with a resistor from SET to GND. SET can also program the output voltage with a resistor-divider between OUT and GND.

Detailed Description

The MAX1910/MAX1912 are complete charge-pump boost converters requiring only four small ceramic capacitors. They employ a 750kHz fixed-frequency 50% duty-cycle clock.

The MAX1910 has two modes of operation: 1.5x and 2x. Each mode has two phases: charge and transfer (see Figure 1). In 1.5x mode charge phase, transfer capacitors C1 and C2 charge in series from the input voltage. In transfer phase, C1 and C2 are configured in parallel and connected from OUT to IN, transferring charge to C_{OUT}. If this system were allowed to operate unregulated and unloaded, it would generate an output voltage 1.5 times the input voltage (hence the terms "fractional charge pump" and "1.5x mode"). When the input voltage drops sufficiently, the operating mode shifts from a 1.5x fractional charge pump to a 2x doubler. C2 is not used in doubler mode. The device transitions out of doubler mode when V_{IN} is greater than ~75% of V_{OUT} for more than 32 clock cycles (at full load). The MAX1912 operates only in 1.5x charge-pump mode.

Output Regulation

The output is regulated by controlling the rate at which the transfer capacitors are charged. The switching frequency and duty cycle are constant, so the output noise spectrum is predictable. Input and output ripple are much smaller in value than with other regulating

charge-pump topologies because the charge transferred per cycle is only the amount required to supply the output load.

Soft-Start

The MAX1910/MAX1912 include soft-start circuitry to limit inrush current at turn-on. When starting up with the output voltage at zero, the output capacitor charges through a ramped current source, directly from the input with no charge-pump action until the output voltage is near the input voltage. If the output is shorted to ground, the part remains in this mode without damage until the short is removed.

Once the output capacitor charges to the input voltage, the charge-pumping action begins. Startup surge current is minimized by ramping up charge on the transfer capacitors. As soon as regulation is reached, soft-start ends and the part operates normally. If the SET voltage reaches regulation within 2048 clock cycles (typically 2.7ms), the part begins to run in normal mode. If the SET voltage is not reached by 2048 cycles, the soft-start sequence is repeated. The devices continue to repeat the soft-start sequence until the SET voltage reaches the regulation point.

Shutdown Mode

When driven low, $\overline{SHDN}$ turns off the charge pump. This reduces the quiescent current to approximately 0.1µA. The output is high impedance in shutdown. Drive $\overline{SHDN}$ high or connect to IN for normal operation.

Thermal Shutdown

The MAX1910/MAX1912 shut down when their die temperature reaches +160°C. Normal operation continues after the die cools by 15°C. This prevents damage if an excessive load is applied or the output is shorted to ground.

Design Procedure

Setting Output Current

The MAX1910/MAX1912 have a SET voltage threshold of 0.2V, used for LED current regulation (Figure 2). The current through the resistor and LED is:

$$I_{LED} = 0.2/R_{SET}$$

If additional matching LEDs with ballast resistors are connected to the output as in Figure 2, the current through each additional LED is the same as that in the regulated LED.

In Figure 2, total LED current depends somewhat on LED matching. Figure 3 shows a connection that regulates the average of all the LED currents to reduce the impact of mismatched LEDs. Figure 4's circuit improves LED current matching by raising the ballast resistance while maintaining a 200mV V_{SET}. The increased ballast resistance tolerates wider LED mismatch, but reduces efficiency and raises the minimum input voltage required for regulation.

Yet another method of biasing LEDs is shown in Figure 5. In this case, the current through the complete parallel combination of LEDs is set by R5. R1–R4 are only used to compensate for LED variations. This method of biasing is useful for parallel LED arrays that do not allow connection to individual LEDs.

Setting Output Voltage

The MAX1910 has a SET voltage threshold of 0.2V. Output voltage can be set by connecting a resistor voltage-divider as shown in Figure 6. The output voltage is adjustable from V_{IN} to 5V. To set the output voltage, select a value for R2 that is less than 20kΩ, then solve for R1 using the following equation:

$$R1 = R2\left(\frac{V_{OUT}}{0.2} - 1\right)$$

Capacitor Selection

Use low-ESR ceramic capacitors. Recommended values are 0.47µF for the transfer capacitors, 2.2µF to 10µF for the input capacitor, and 2.2µF to 4.7µF for the output capacitor. To ensure stability over a wide temperature range, ceramic capacitors with an X7R dielectric are recommended. Place these capacitors as close to the IC as possible. Increasing the value of the input and output capacitors further reduces input and output ripple. With a 10µF input capacitor and a 4.7µF output capacitor, input ripple is less than 5mV peak-to-peak and output ripple is less than 15mV peak-to-peak for 60mA of output current. A constant 750kHz switching frequency and fixed 50% duty cycle create input and output ripple with a predictable frequency spectrum.

Decoupling the input with a 1Ω resistor (as shown in Figures 2–9) improves stability when operating from low-impedance sources such as high-current laboratory bench power supplies. This resistor can be omitted when operating from higher impedance sources such as lithium or alkaline batteries.

For some designs, such as an LED driver, input ripple is more important than output ripple. Input ripple depends on the source supply's impedance. Adding a lowpass filter to the input further reduces ripple. Figure 7 shows a C-R-C filter used to reduce input ripple. With 10µF-1Ω-10µF, input ripple is less than 1mV when driving a 60mA load.

1.5x/2x High-Efficiency White LED Charge Pumps

Applications Information

Adjusting LED Intensity

Figure 8 shows a circuit using a DAC to set the LED intensity. Maximum intensity occurs when the output of the DAC is zero. R_L can be initially estimated from the maximum load current:

$$R_L \approx 0.2/I_{L(MAX)}$$

Use this as a starting point to calculate R_A and R_B from the formula below. The total LED current, I_L, at different DAC output voltages is determined by:

$$I_L = \frac{0.2}{R_L} - \frac{(V_{DAC} - 0.2) \times R_B}{R_L \times R_A}$$

Figure 9 uses a digital input for two-level dimming control. The LEDs are brightest when a logic-low input (V_{LOGIC} = 0) is applied, and dimmed with a logic-high input.

The total LED current is determined by:

$$I_L = \frac{0.2}{R_L} - \frac{(V_{LOGIC} - 0.2) \times R_B}{R_L \times R_A}$$

PC Board Layout

The MAX1910/MAX1912 are high-frequency switched-capacitor voltage regulators. For best circuit performance, use a ground plane and keep C_{IN}, C_{OUT}, C1, C2, and feedback resistors (if used) close to the device. If using external feedback, keep the feedback node as small as possible by positioning the feedback resistors very close to SET.

Chip Information

TRANSISTOR COUNT: 2497

PROCESS: BiCMOS

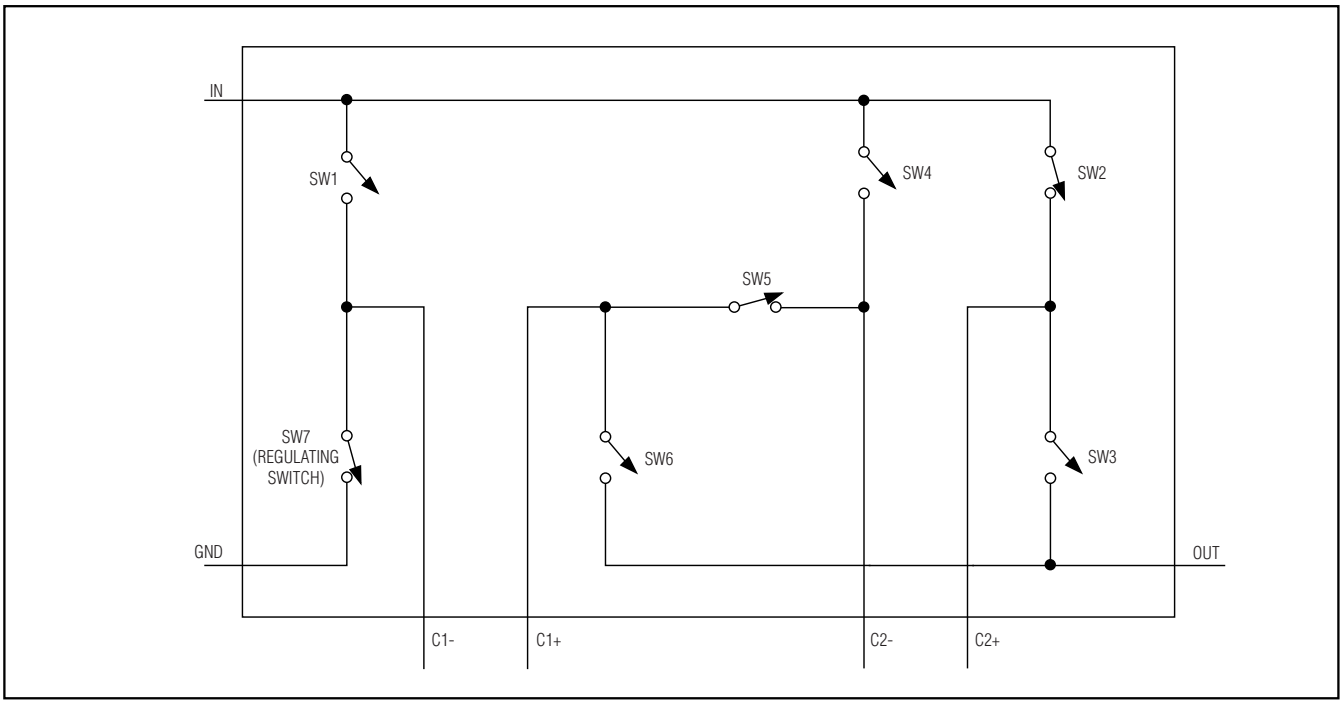

MODE	PHASE	SW1	SW2	SW3	SW4	SW5	SW6	SW7
1.5x	Charging	OFF	ON	OFF	OFF	ON	OFF	ON
1.5x	Transfer	ON	OFF	ON	ON	OFF	ON	OFF
2x	Charging	OFF	OFF	ON	ON	ON	OFF	ON
2x	Transfer	ON	OFF	ON	ON	OFF	ON	OFF

Figure 1. Functional Charge-Pump Switch Diagram (Switches Shown for 1.5x Charging Phase)

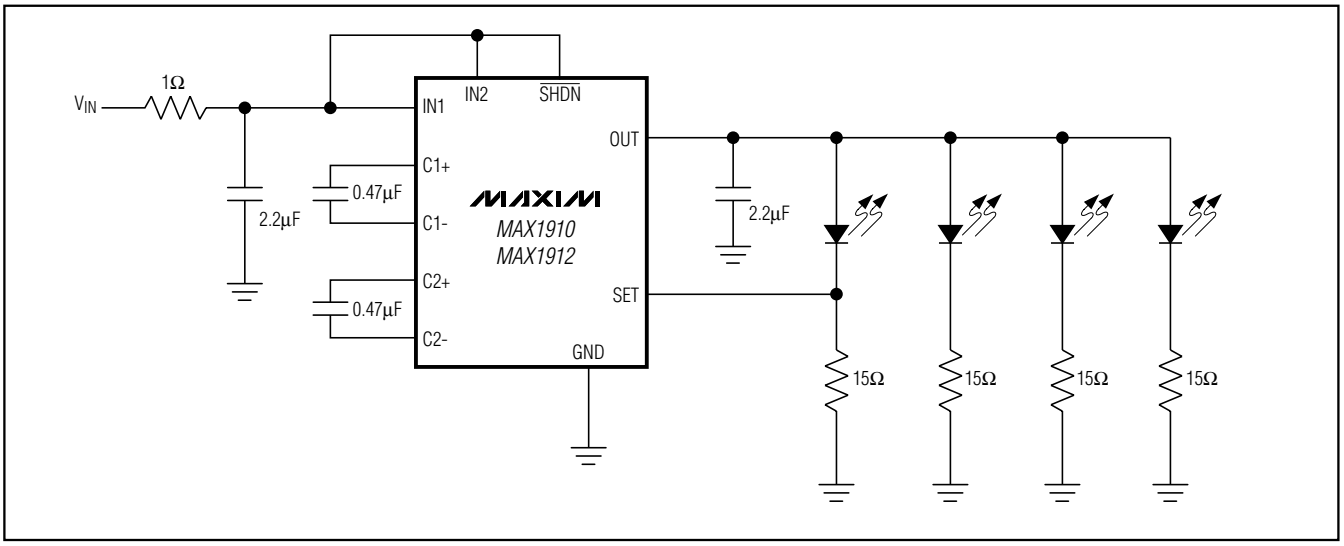

Figure 2. LED Biasing with the MAX1912

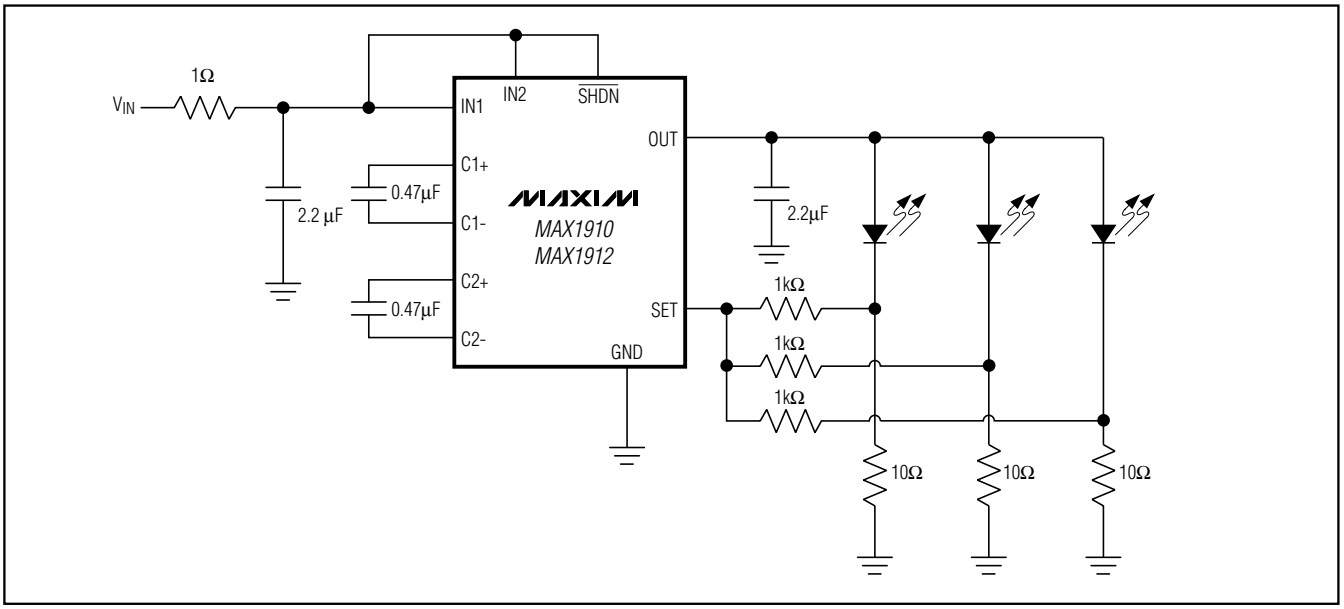

Figure 3. The MAX1912 Regulating Average Current Through LEDs

1.5x/2x High-Efficiency White LED Charge Pumps

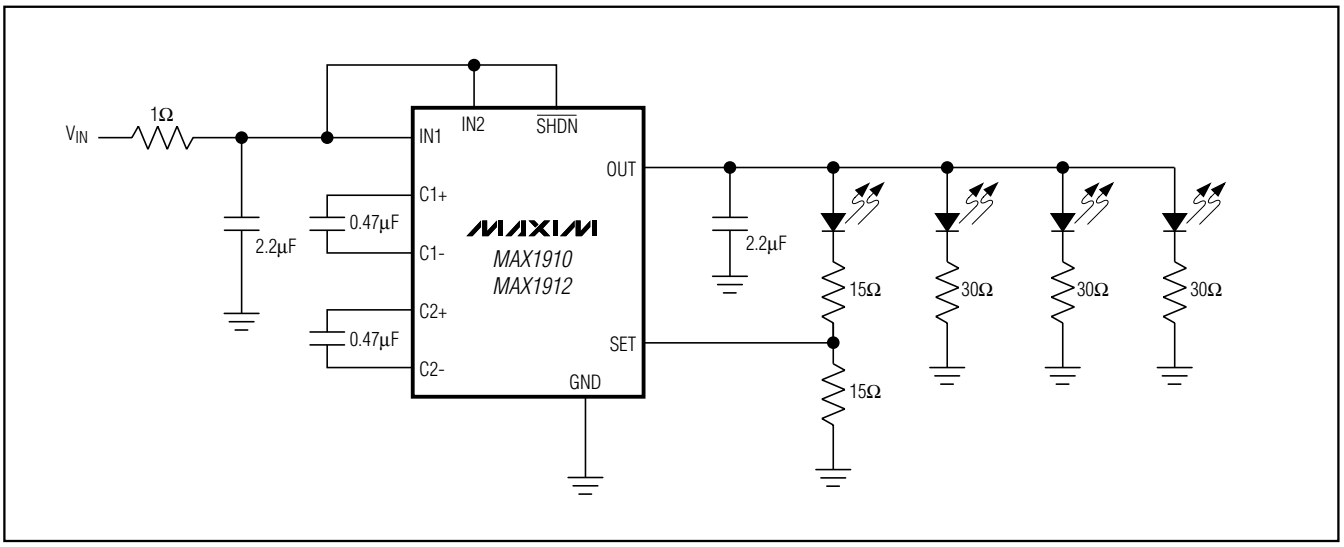

Figure 4. Alternate Method of Biasing to Improve LED-to-LED Matching

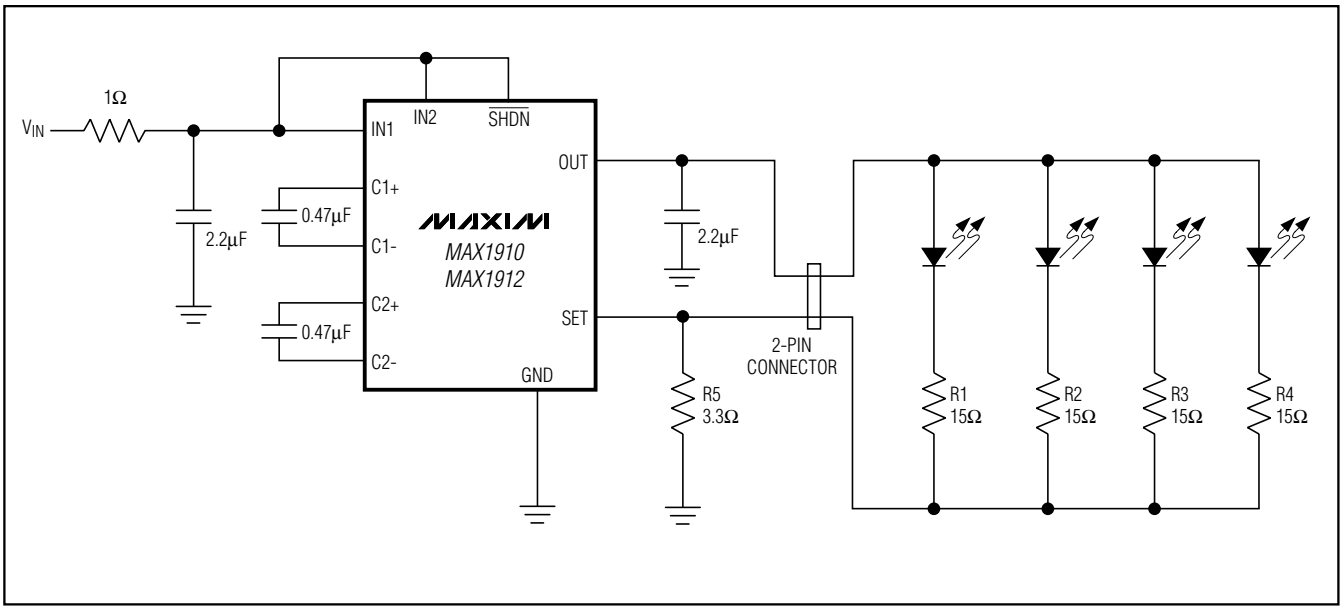

Figure 5. Alternate Method of Biasing LEDs Controls Total Current; Suitable When the LED Array Must Be Biased with Only Two Connections

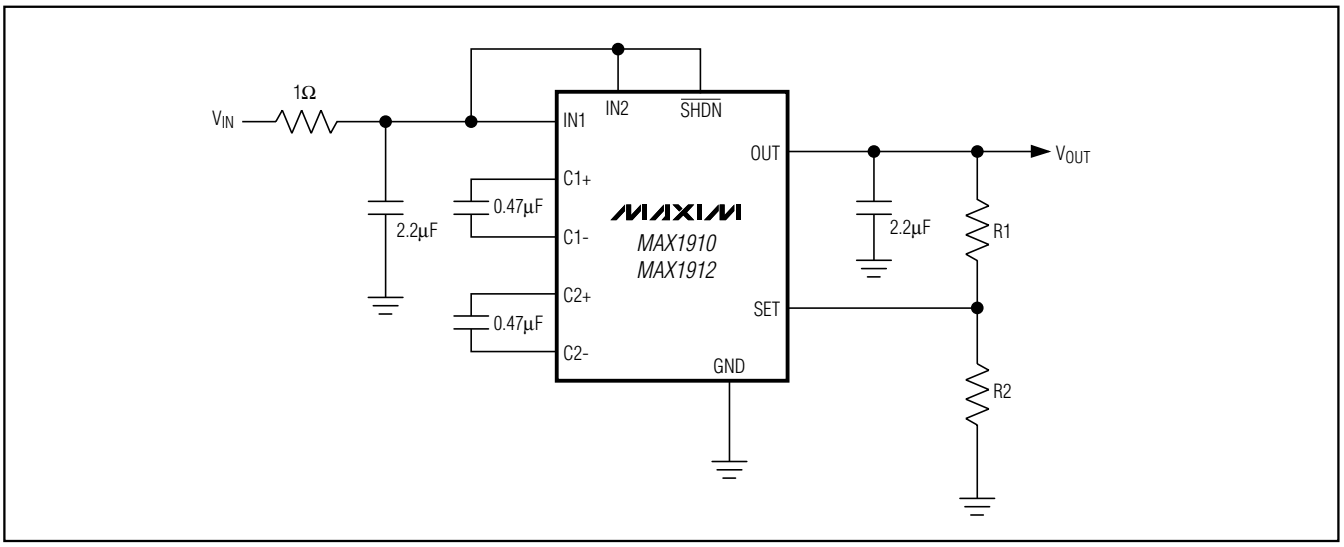

Figure 6. Output Voltage Set with a Resistor-Divider

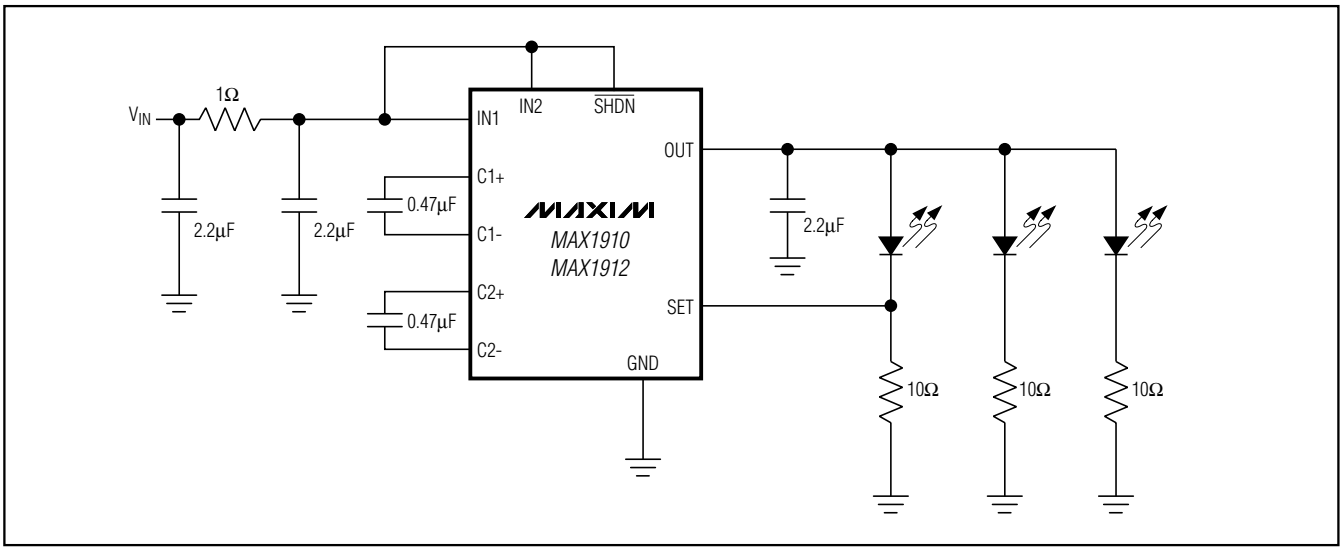

Figure 7. C-R-C Filter Reduces Ripple On the Input

1.5x/2x High-Efficiency White LED Charge Pumps

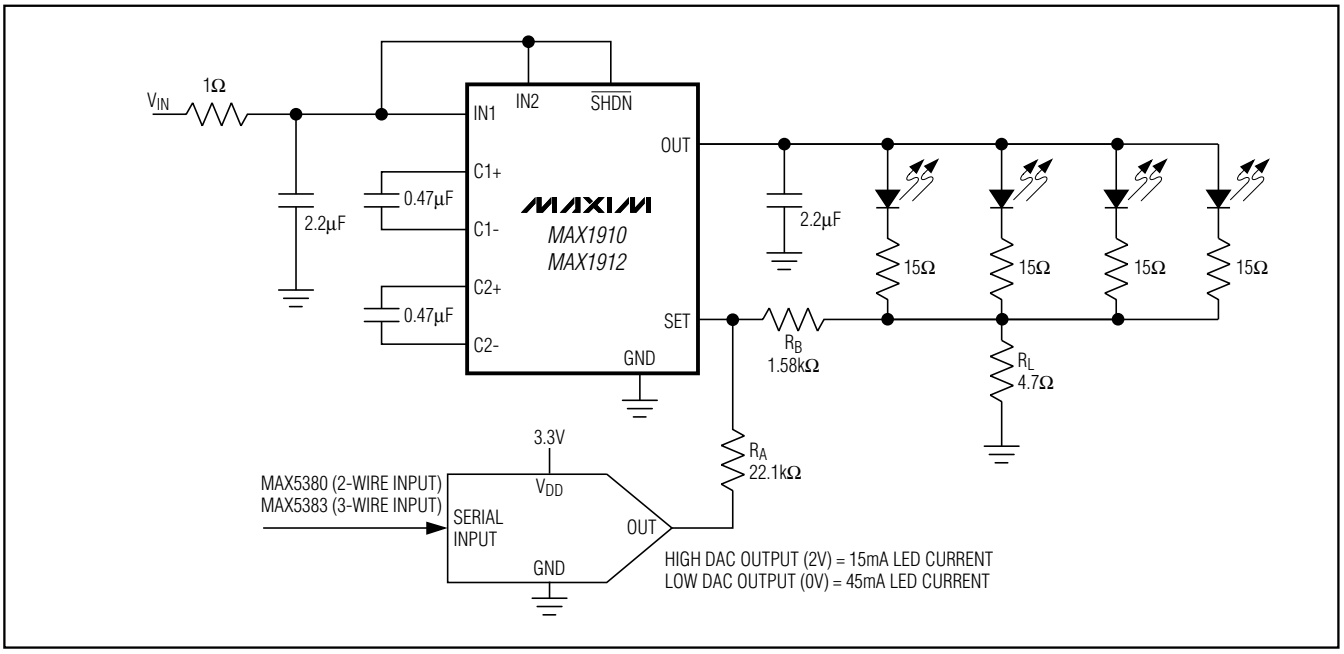

Figure 8. Circuit with SOT DAC for Intensity Control

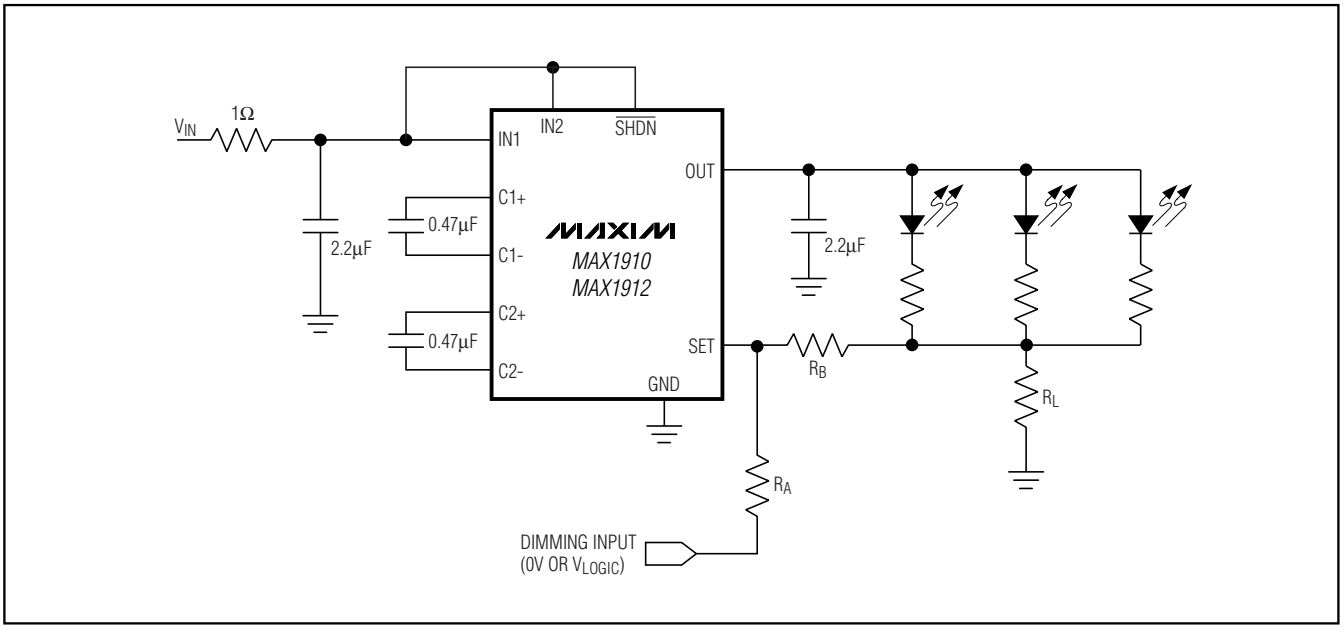

Figure 9. Using Digital Logic Input for Intensity Control

Package Information

(The package drawing(s) in this data sheet may not reflect the most current specifications. For the latest package outline information, go to **www.maxim-ic.com/packages**.)

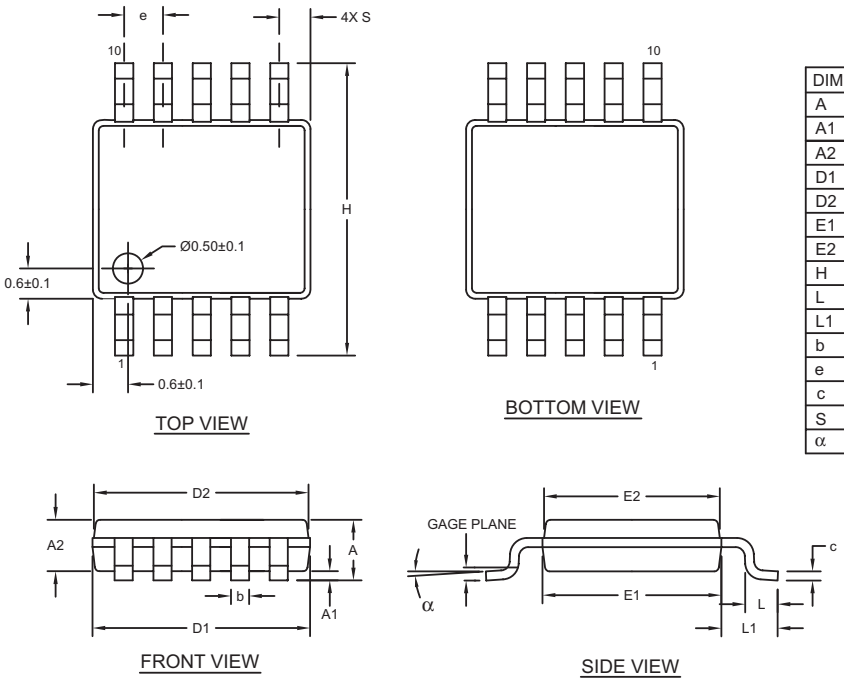

DIM	INCHES MIN	INCHES MAX	MILLIMETERS MIN	MILLIMETERS MAX
A	-	0.043	-	1.10
A1	0.002	0.006	0.05	0.15
A2	0.030	0.037	0.75	0.95
D1	0.116	0.120	2.95	3.05
D2	0.114	0.118	2.89	3.00
E1	0.116	0.120	2.95	3.05
E2	0.114	0.118	2.89	3.00
H	0.187	0.199	4.75	5.05
L	0.0157	0.0275	0.40	0.70
L1	0.037 REF		0.940 REF	
b	0.007	0.0106	0.177	0.270
e	0.0197 BSC		0.500 BSC	
c	0.0035	0.0078	0.090	0.200
S	0.0196 REF		0.498 REF	
α	0°	6°	0°	6°

10LUMAX.EPS

NOTES:
1. D&E DO NOT INCLUDE MOLD FLASH.
2. MOLD FLASH OR PROTRUSIONS NOT TO EXCEED 0.15mm (.006").
3. CONTROLLING DIMENSION: MILLIMETERS.
4. MEETS JEDEC MO-187C-BA.

DALLAS SEMICONDUCTOR MAXIM

PROPRIETARY INFORMATION

TITLE: PACKAGE OUTLINE, 10L uMAX/uSOP

APPROVAL	DOCUMENT CONTROL NO.	REV.	
	21-0061	I	1/1

Maxim cannot assume responsibility for use of any circuitry other than circuitry entirely embodied in a Maxim product. No circuit patent licenses are implied. Maxim reserves the right to change the circuitry and specifications without notice at any time.

© 2004 Maxim Integrated Products MAXIM is a registered trademark of Maxim Integrated Products, Inc.

Looking for pricing, stock, or lifecycle information?

Click below to explore more details on WIN SOURCE:

- View MAX1910EUB+T on WIN SOURCE
- Maxim Integrated Information

Optimize Your Supply Chain with WIN SOURCE Solutions

- Global Sourcing Solution
- Obsolete Management
- Cost Control Management
- Shortage Management
- Alternative Solution
- Excess Inventory Management