THE DATASHEET OF

M29W640GT60ZA6E

www.win-source.net 0086-755-83957316

Parallel NOR Flash Embedded Memory

M29W640GH, M29W640GL
M29W640GT, M29W640GB

Features

- Supply voltage
  - V_{CC} = 2.7–3.6V (program, erase, read)
  - V_{PP} = 12V for fast program (optional)
- Asynchronous random/page read
  - Page width: 4 words
  - Page access: 25ns
  - Random access: 60ns, 70ns, 90ns
- Fast program commands
  - 2-word/4-byte program (without V_{PP} = 12V)
  - 4-word/8-byte program (with V_{PP} = 12V)
  - 16-word/32-byte write buffer
- Programming time
  - 10µs per byte/word TYP
  - Chip program time: 10 s (4-word program)
  - Double word/quadruple byte program
- Memory organization
  - M29W640GH/L 128 main blocks, 64KB each
  - M29W640GT/B 127 main blocks, 64KB each and 8 boot blocks, 8KB each
- Program/erase controller
  - Embedded byte/word program algorithms
- Program/erase suspend and resume
  - Read from any block during a PROGRAM SUSPEND operation
  - Read or program another block during an ERASE SUSPEND operation
- Hardware block protection
  - V_{PP}/WP# pin for fast program and write protect
  - Temporary block unprotect mode
- Common Flash interface
  - 64-bit security code
- 128-word extended memory block
  - Extra block used as security block or to store additional information
- Low power consumption: Standby and automatic mode
- 100,000 PROGRAM/ERASE cycles per block
- Electronic signature
  - Manufacturer code: 0020h
- Device summary: part number and device code
  - M29W640GH: uniform, last block protected by V_{PP}/WP#
  - 227Eh + 220Ch + 2201h
  - M29W640GL: uniform, first block protected by V_{PP}/WP#
  - 227Eh + 220Ch + 2200h
  - M29W640GT: top boot block
  - 227Eh + 2210h + 2201h
  - M29W640GB: bottom boot block
  - 227Eh + 2210h + 2200h
- RoHS-compliant packages
  - 48-pin TSOP (N/NA) 12mm x 20mm
  - 56-pin TSOP (NB) 14mm x 20mm
  - 48-ball TFBGA (ZA) 6mm x 8mm
  - 64-ball FBGA (ZS) 11mm x 13mm
  - 64-ball TBGA (ZF) 10mm x 13mm
- Automotive certified parts available

Part Numbering Information

Available with extended memory block prelocked by Micron. Devices are shipped from the factory with memory content bits erased to 1. For available options, such as packages or speed, or for further information, contact your Micron sales representative. Part numbers can be verified at www.micron.com. Feature and specification comparison by device type is available at www.micron.com/products. Contact the factory for devices not found.

Table 1: Part Number Information

Part Number Category	Category Details
Device Type	M29 = Parallel Flash memory

Micron Technology, Inc. reserves the right to change products or specifications without notice.
© 2013 Micron Technology, Inc. All rights reserved.
Products and specifications discussed herein are subject to change by Micron without notice.

Table 1: Part Number Information (Continued)

Part Number Category	Category Details
Operating Voltage	W = 2.7 to 3.6V
Device Function	640G = 64Mb (x8/x16) boot block, uniform or boot block
Array Matrix	T = Top boot
	B = Bottom boot
	L = First block protected by V_{PP}/WP#
	H = Last block protected by V_{PP}/WP#
Speed	60 = 60ns (in conjunction with temperature range 6; denotes industrial grade –40°C to 85°C parts)
	6A = 60ns (in conjunction with temperature range 6; denotes automotive grade –40°C to 85°C parts)
	7A = 70ns (in conjunction with temperature range 6; denotes automotive grade –40°C to 85°C parts)
	70 = 70ns (in conjunction with temperature range 6; denotes industrial grade –40°C to 85°C parts; temperature range = 3 denotes automotive grade –40°C to 125°C parts)
	90 = 90ns (in conjunction with temperature range 6; denotes industrial grade –40°C to 85°C parts)
Package	N/NA = 48-pin TSOP, 12mm x 20mm
	NB = 56-pin TSOP, 14mm x 20mm (available upon request)
	ZA = 48-ball TFBGA, 6mm x 8mm, 0.8mm pitch
	ZS = 64-ball FBGA, 11mm x 13mm, 1mm pitch
	ZF = 64-ball TBGA, 10mm x 13mm, 1mm pitch (available upon request)
Temperature Range	6 = –40°C to 85°C
	3 = –40°C to 125°C (Automotive)
Shipping Options	E = RoHS-compliant package, standard packing
	F = RoHS-compliant package, tape and reel packing

Micron Technology, Inc. reserves the right to change products or specifications without notice.
© 2013 Micron Technology, Inc. All rights reserved.

Contents

Important Notes and Warnings 7
General Description 8
Signal Assignments 11
Signal Descriptions 15
Memory Organization 18
  Memory Configuration 18
  Uniform Block Memory Map, x16 – 64Mb Density 18
  Uniform Block Memory Map, x8 – 64Mb Density 18
Bus Operations 19
  Read 19
  Write 19
  Standby and Automatic Standby 19
  Output Disable 20
Status Register 20
  Data Polling Bit (DQ7) 20
  Toggle Bit (DQ6) 20
  Error Bit (DQ5) 20
  Erase Timer Bit (DQ3) 21
  Alternative Toggle Bit (DQ2) 21
  Write to Buffer and Program Abort Bit (DQ1) 21
READ Operations 24
  READ/RESET Command 24
  READ CFI Command 25
AUTO SELECT Operations 26
  AUTO SELECT Command 26
Command Interface 29
  READ/RESET Command 29
  AUTO SELECT Command 29
  READ CFI QUERY Command 29
  PROGRAM Command 30
  PROGRAM SUSPEND Command 30
  PROGRAM RESUME Command 31
  Fast Program Commands 31
  DOUBLE BYTE PROGRAM Command 31
  QUADRUPLE BYTE PROGRAM Command 31
  OCTUPLE BYTE PROGRAM Command 31
  DOUBLE WORD PROGRAM Command 32
  QUADRUPLE WORD PROGRAM Command 32
  WRITE TO BUFFER AND PROGRAM Command 33
  WRITE TO BUFFER AND PROGRAM CONFIRM Command 34
  WRITE TO BUFFER AND PROGRAM ABORT AND RESET Command 34
  UNLOCK BYPASS Command 34
  UNLOCK BYPASS PROGRAM Command 34
  UNLOCK BYPASS RESET Command 35
  CHIP ERASE Command 35
  BLOCK ERASE Command 35
  ERASE SUSPEND Command 36
  ERASE RESUME Command 36
  ENTER EXTENDED BLOCK Command 36
  EXIT EXTENDED BLOCK Command 36

Micron Technology, Inc. reserves the right to change products or specifications without notice.
© 2013 Micron Technology, Inc. All rights reserved.

BLOCK PROTECT and CHIP UNPROTECT Commands 37
BLOCK PROTECT Command 37
Programmer Technique 37
In-System Technique 40
Common Flash Interface 47
Absolute Ratings and Operating Conditions 52
DC Characteristics 54
Read AC Characteristics 55
Write AC Characteristics 58
Toggle and Alternative Toggle AC Characteristics 62
Program/Erase Characteristics 64
Reset Characteristics 68
Package Dimensions 69
Revision History 74
Rev. E – 2/18 74
Rev. D – 03/15 74
Rev. C – 07/13 74
Rev. B – 06/13 74
Rev. A – 11/12 74

Micron Technology, Inc. reserves the right to change products or specifications without notice.
© 2013 Micron Technology, Inc. All rights reserved.

List of Figures

Figure 1: Logic Diagram 9
Figure 2: 48-Pin TSOP 11
Figure 3: 56-Pin TSOP 12
Figure 4: 48-Ball TFBGA 13
Figure 5: 64-Ball TFBGA 14
Figure 6: Data Polling Flowchart 23
Figure 7: Data Toggle Flowchart 24
Figure 8: Programmer Equipment Block Protect Flowchart 38
Figure 9: Programmer Equipment Chip Unprotect Flowchart 39
Figure 10: In-System Equipment Block Protect Flowchart 41
Figure 11: In-System Equipment Chip Protect Flowchart 42
Figure 12: AC Measurement Load Circuit 53
Figure 13: AC Measurement I/O Waveform 53
Figure 14: Random AC Timing 56
Figure 15: Page Read AC Timing 57
Figure 16: WE#-Controlled AC Timing 59
Figure 17: CE#-Controlled AC Timing 61
Figure 18: Toggle/Alternative Toggle, CE# Controlled 62
Figure 19: Toggle/Alternative Toggle, OE# Controlled 63
Figure 20: WE# Controlled Program Waveform 65
Figure 21: CE# Controlled Program Waveform 66
Figure 22: Chip/Block Erase Waveform 67
Figure 23: Reset/Block Temporary Unprotect AC Waveforms 68
Figure 24: Accelerated Programming Timing Waveform 68
Figure 25: 48-Pin TSOP – 12mm x 20mm 69
Figure 26: 56-Pin TSOP – 14mm x 20mm 70
Figure 27: 48-Ball TFBGA – 6mm x 8mm 71
Figure 28: 64-Ball TBGA – 10mm x 13mm 72
Figure 29: 64-Ball FBGA – 11mm x 13mm 73

Micron Technology, Inc. reserves the right to change products or specifications without notice.
© 2013 Micron Technology, Inc. All rights reserved.

List of Tables

Table 1: Part Number Information 1
Table 2: Signal Names 9
Table 3: Protection Granularity on the M29W640GH and M29W640GL 9
Table 4: Protection Granularity on the M29W640GT 10
Table 5: Protection Granularity on the M29W640GB 10
Table 6: Signal Descriptions 15
Table 7: Hardware Protection 17
Table 8: x16 Uniform Blocks [127:0] 18
Table 9: x8 Uniform Blocks [127:0] 18
Table 10: Bus Operations 19
Table 11: Status Register Bits 21
Table 12: Read Electronic Signature 26
Table 13: Block Protection 27
Table 14: Programmer Technique Bus Operations 40
Table 15: Commands – 16-Bit Mode (BYTE# = V_{IH}) 43
Table 16: Commands – 8-Bit Mode (BYTE# = V_{IL}) 45
Table 17: Query Structure Overview 47
Table 18: CFI Query Identification String 47
Table 19: CFI Query System Interface Information 48
Table 20: Device Geometry Definition 48
Table 21: Primary Algorithm-Specific Extended Query Table 49
Table 22: Security Code Area 51
Table 23: Absolute Maximum/Minimum Ratings 52
Table 24: Operating Conditions 52
Table 25: Input/Output Capacitance 53
Table 26: DC Current Characteristics 54
Table 27: DC Voltage Characteristics 54
Table 28: Read AC Characteristics 55
Table 29: WE#-Controlled Write AC Characteristics 58
Table 30: CE#-Controlled Write AC Characteristics 60
Table 31: Toggle and Alternative Toggle AC Characteristics 62
Table 32: Program/Erase Times and Endurance Cycles 64
Table 33: Reset/Block Temporary Unprotect AC Characteristics 68

Micron Technology, Inc. reserves the right to change products or specifications without notice.
© 2013 Micron Technology, Inc. All rights reserved.

Important Notes and Warnings

Micron Technology, Inc. ("Micron") reserves the right to make changes to information published in this document, including without limitation specifications and product descriptions. This document supersedes and replaces all information supplied prior to the publication hereof. You may not rely on any information set forth in this document if you obtain the product described herein from any unauthorized distributor or other source not authorized by Micron.

Automotive Applications. Products are not designed or intended for use in automotive applications unless specifically designated by Micron as automotive-grade by their respective data sheets. Distributor and customer/distributor shall assume the sole risk and liability for and shall indemnify and hold Micron harmless against all claims, costs, damages, and expenses and reasonable attorneys' fees arising out of, directly or indirectly, any claim of product liability, personal injury, death, or property damage resulting directly or indirectly from any use of non-automotive-grade products in automotive applications. Customer/distributor shall ensure that the terms and conditions of sale between customer/distributor and any customer of distributor/customer (1) state that Micron products are not designed or intended for use in automotive applications unless specifically designated by Micron as automotive-grade by their respective data sheets and (2) require such customer of distributor/customer to indemnify and hold Micron harmless against all claims, costs, damages, and expenses and reasonable attorneys' fees arising out of, directly or indirectly, any claim of product liability, personal injury, death, or property damage resulting from any use of non-automotive-grade products in automotive applications.

Critical Applications. Products are not authorized for use in applications in which failure of the Micron component could result, directly or indirectly in death, personal injury, or severe property or environmental damage ("Critical Applications"). Customer must protect against death, personal injury, and severe property and environmental damage by incorporating safety design measures into customer's applications to ensure that failure of the Micron component will not result in such harms. Should customer or distributor purchase, use, or sell any Micron component for any critical application, customer and distributor shall indemnify and hold harmless Micron and its subsidiaries, subcontractors, and affiliates and the directors, officers, and employees of each against all claims, costs, damages, and expenses and reasonable attorneys' fees arising out of, directly or indirectly, any claim of product liability, personal injury, or death arising in any way out of such critical application, whether or not Micron or its subsidiaries, subcontractors, or affiliates were negligent in the design, manufacture, or warning of the Micron product.

Customer Responsibility. Customers are responsible for the design, manufacture, and operation of their systems, applications, and products using Micron products. ALL SEMICONDUCTOR PRODUCTS HAVE INHERENT FAILURE RATES AND LIMITED USEFUL LIVES. IT IS THE CUSTOMER'S SOLE RESPONSIBILITY TO DETERMINE WHETHER THE MICRON PRODUCT IS SUITABLE AND FIT FOR THE CUSTOMER'S SYSTEM, APPLICATION, OR PRODUCT. Customers must ensure that adequate design, manufacturing, and operating safeguards are included in customer's applications and products to eliminate the risk that personal injury, death, or severe property or environmental damages will result from failure of any semiconductor component.

Limited Warranty. In no event shall Micron be liable for any indirect, incidental, punitive, special or consequential damages (including without limitation lost profits, lost savings, business interruption, costs related to the removal or replacement of any products or rework charges) whether or not such damages are based on tort, warranty, breach of contract or other legal theory, unless explicitly stated in a written agreement executed by Micron's duly authorized representative.

Micron Technology, Inc. reserves the right to change products or specifications without notice.
© 2013 Micron Technology, Inc. All rights reserved.

General Description

The M29W640G is a 64Mb (8Mb x8 or 4Mb x16) nonvolatile memory that can be read, erased, and reprogrammed. These operations can be performed using a single low voltage (2.7–3.6V) supply. Upon power-up, the device defaults to read mode.

The memory is divided into blocks that can be erased independently so that valid data can be preserved while old data is erased. PROGRAM and ERASE commands are written to the command interface of the memory. An on-chip program/erase controller simplifies the process of programming or erasing the memory by taking care of all special operations required to update the memory contents. The end of a PROGRAM or ERASE operation can be detected and any error condition can be identified. The command set required to control the device is consistent with JEDEC standards.

The M29W640GH and M29W640GL memory array is organized into 128 uniform blocks of 64KB each (or 32Kwords each).

The M29W640GT and M29W640GB feature an asymmetric memory block, each having an array of 135 blocks divided into 8 parameter blocks of 8KB each (or 4 Kwords each), and 127 main blocks of 64KB each (or 32Kwords each). The M29W640GT has the parameter blocks at the top of the memory array whereas the M29W640GB locates the parameter blocks starting from the bottom.

Blocks are protected by groups to prevent accidental PROGRAM or ERASE commands from modifying the memory.

The M29W640G supports asynchronous random read and page read from all blocks of the array. Chip enable, output enable, and write enable signals control the bus operation. They enable simple connection to most microprocessors, often without additional logic.

The V_{PP}/WP# signal is used to enable faster programming of the device. Protection from PROGRAM/ERASE commands can be obtained by holding V_{PP}/WP# to V_{SS}:

- On the M29W640GH and M29W640GL, the last and first blocks are protected.
- On the M29W640GT and M29W640GB, the last two and first two boot blocks are protected.

The M29W640G devices feature a full set of fast program commands to improve programming throughput:

- 2-byte PROGRAM (it is not necessary to raise V_{PP}/WP# to 12V before issuing this command)
- 2 words/4-byte PROGRAM (it is not necessary to raise V_{PP}/WP# to 12V before issuing this command)
- 4 word/8-byte PROGRAM (V_{PP}/WP# must be raised to 12V before issuing this command)
- WRITE TO BUFFER and PROGRAM (enables program in one shot a buffer of 16 words/32 bytes)

The M29W640G has an extra block, the extended block, of 128 words in x16 mode or 256 bytes in x8 mode that can be accessed using a dedicated command. The extended block can be protected, and therefore, is useful for storing security information. However, protection is not reversible; once protected, the protection cannot be undone.

The memory is delivered with all bits erased (set to 1).

Micron Technology, Inc. reserves the right to change products or specifications without notice.
© 2013 Micron Technology, Inc. All rights reserved.

Figure 1: Logic Diagram

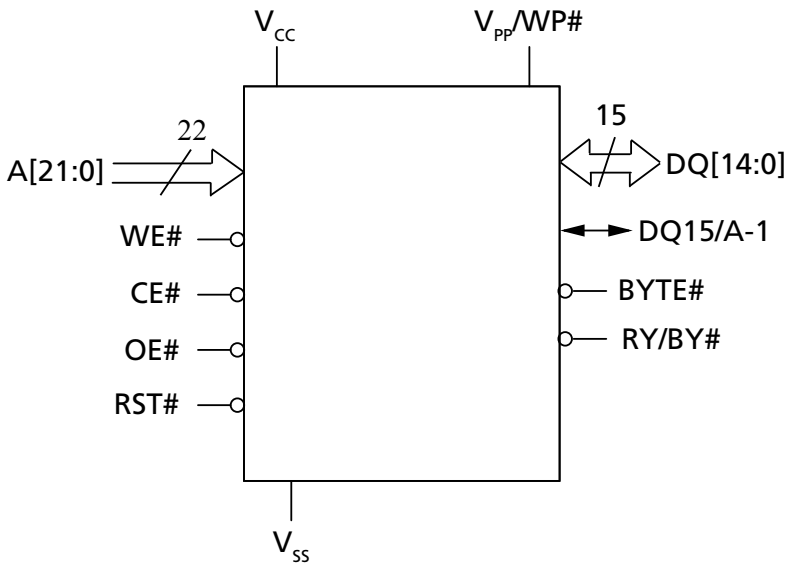

Table 2: Signal Names

Name	Description	Direction
A0-A21	Address inputs	Inputs
CE#	Chip enable	Input
OE#	Output enable	Input
WE#	Write enable	Input
RP#	Reset/Block temporary unprotect	Input
RY/BY#	Ready/Busy	Input
BYTE#	Byte/Word organization select	Input
DQ0–DQ7	Data input/outputs	I/O
DQ8–DQ14	Data input/outputs	I/O
DQ15A-1 (or DQ15)	Data input/output or address input (or data I/O)	I/O
V_{CC}	Supply voltage	Supply voltage
V_{PP}/WP#	Supply voltage for FAST PROGRAM (optional) or WRITE PROTECT command	Supply voltage
V_{SS}	Ground	–
NC	Not connected internally	–

Note: 1. V_{PP}/WP# may be left floating because it is internally connected to a pull-up resistor to enable PROGRAM/ERASE commands.

Table 3: Protection Granularity on the M29W640GH and M29W640GL

Block	KB/Kwords	Protection Block Group	(x8)	(x16)
0 to 3	4 x 64/32	Block level	000000h-03FFFFh[1]	000000h-01FFFFh[1]

Micron Technology, Inc. reserves the right to change products or specifications without notice.
© 2013 Micron Technology, Inc. All rights reserved.

Table 3: Protection Granularity on the M29W640GH and M29W640GL (Continued)

Block	KB/Kwords	Protection Block Group	(x8)	(x16)
4 to 7	4 x 64/32	Protection group	040000h-07FFFFh	020000h-03FFFFh
–	–	–	–	–
120 to 123	4 x 64/32	Protection group	780000h-7BFFFFh	3C0000h-3DFFFFh
124 to 127	4 x 64/32	Block level	7C0000h-7FFFFFh	3E0000h-3FFFFFh

Note: 1. Used as the extended block addresses in extended block mode.

Table 4: Protection Granularity on the M29W640GT

Block	KB/Kwords	Protection Block Group	(x8)	(x16)
0 to 3	4 x 64/32	Protection group	000000h-03FFFFh[1]	000000h-01FFFFh[1]
4 to 7	4 x 64/32	Protection group	040000h-07FFFFh	020000h-03FFFFh
–	–	–	–	–
120 to 123	4 x 64/32	Protection group	780000h-7BFFFFh	3C0000h-3DFFFFh
124 to 126	3 x 64/32	Protection group	7C0000h-7EFFFFh	3E0000h-3F7FFFh
127 to 134	8 x 8/4[2]	Block level	7F0000h-7FFFFFh	3F8000h-3FFFFFh

Notes: 1. Used as the extended block addresses in extended block mode.
2. Boot blocks.

Table 5: Protection Granularity on the M29W640GB

Block	KB/Kwords	Protection Block Group	(x8)	(x16)
0 to 7	8x 8/4[1]	Block level	000000h-00FFFFh[2]	000000h-007FFFh[2]
8 to 10	3 x 64/32	Protection group	010000h-03FFFFh	008000h-01FFFFh
11 to 14	4 x 64/32	Protection group	040000h-07FFFFh	020000h-03FFFFh
–	–	–	–	–
127 to 130	4 x 64/32	Protection group	780000h-7BFFFFh	3C0000h-3DFFFFh
131 to 134	4 x 64/32	Protection group	7C0000h-7FFFFFh	3E0000h-3FFFFFh

Notes: 1. Boot blocks.
2. Used as the extended block addresses in extended block mode.

Micron Technology, Inc. reserves the right to change products or specifications without notice.
© 2013 Micron Technology, Inc. All rights reserved.

Signal Assignments

Figure 2: 48-Pin TSOP

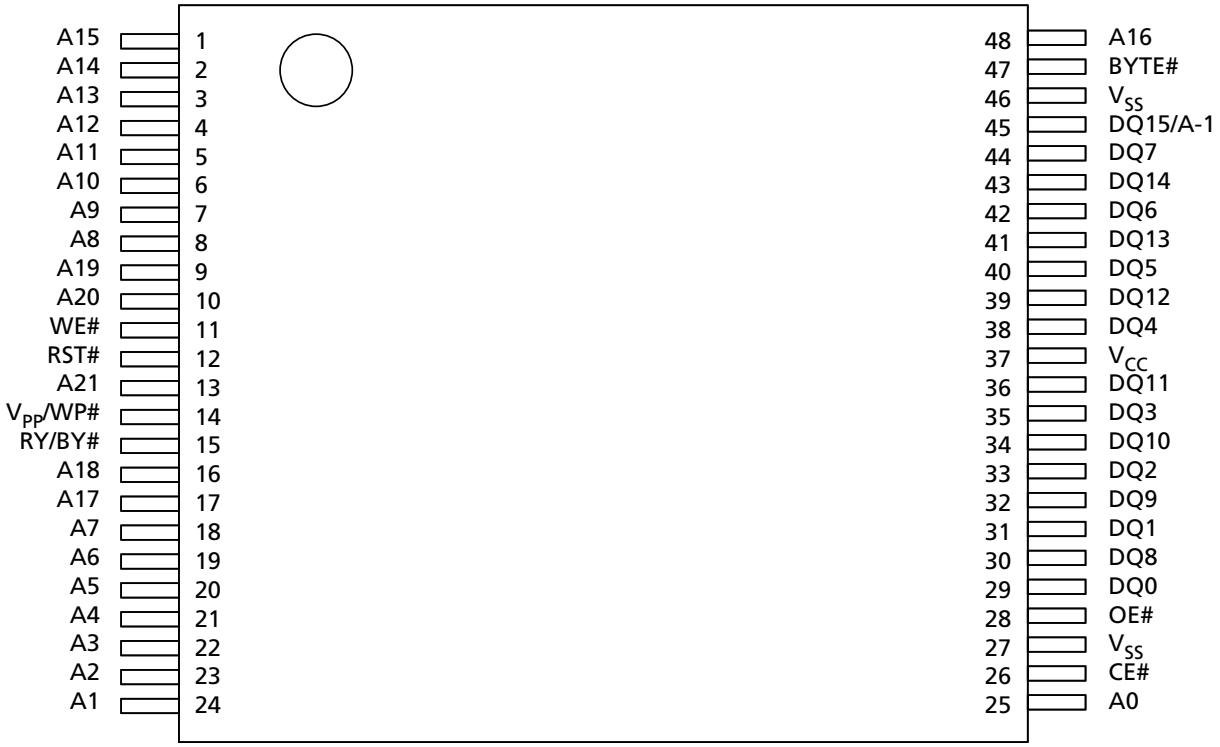

Note: 1. RFU = reserved for future use.

Micron Technology, Inc. reserves the right to change products or specifications without notice.
© 2013 Micron Technology, Inc. All rights reserved.

Figure 3: 56-Pin TSOP

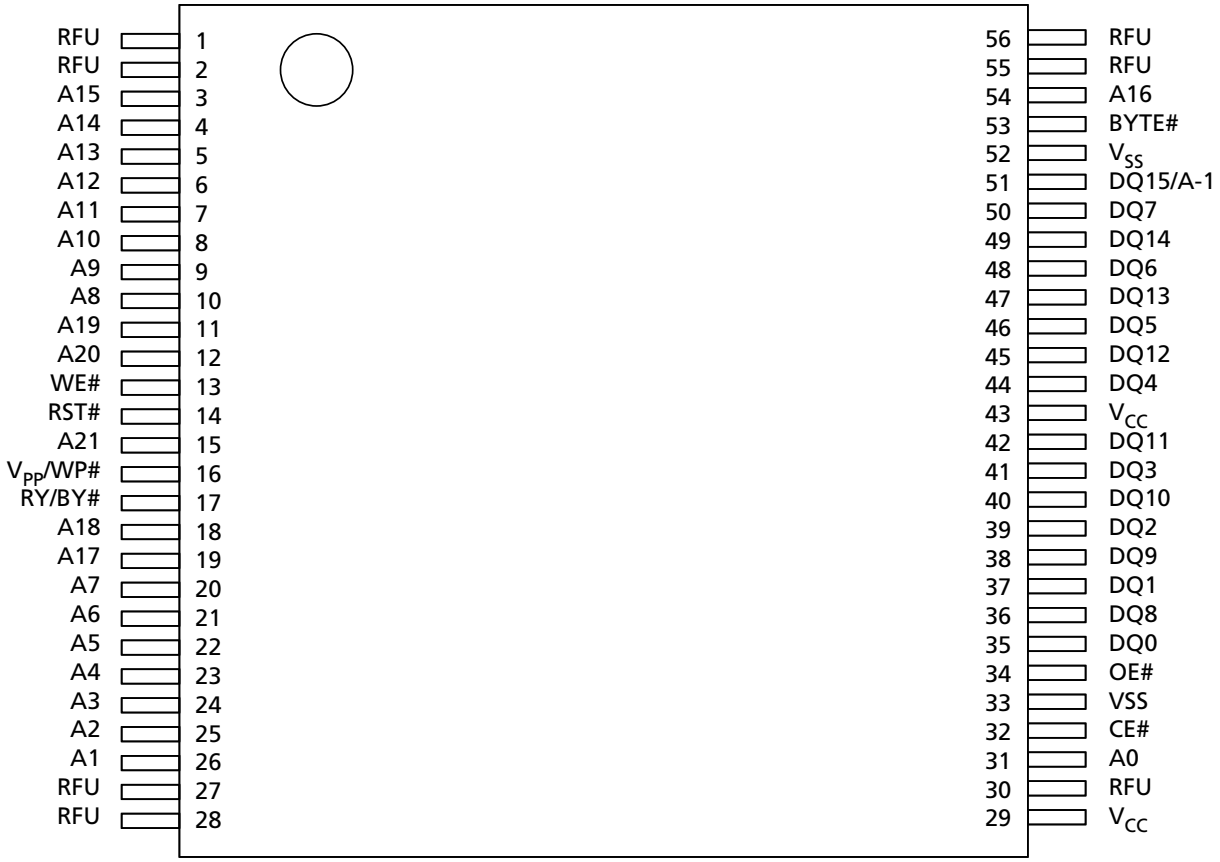

Note: 1. RFU = reserved for future use.

Micron Technology, Inc. reserves the right to change products or specifications without notice.
© 2013 Micron Technology, Inc. All rights reserved.

Figure 4: 48-Ball TFBGA

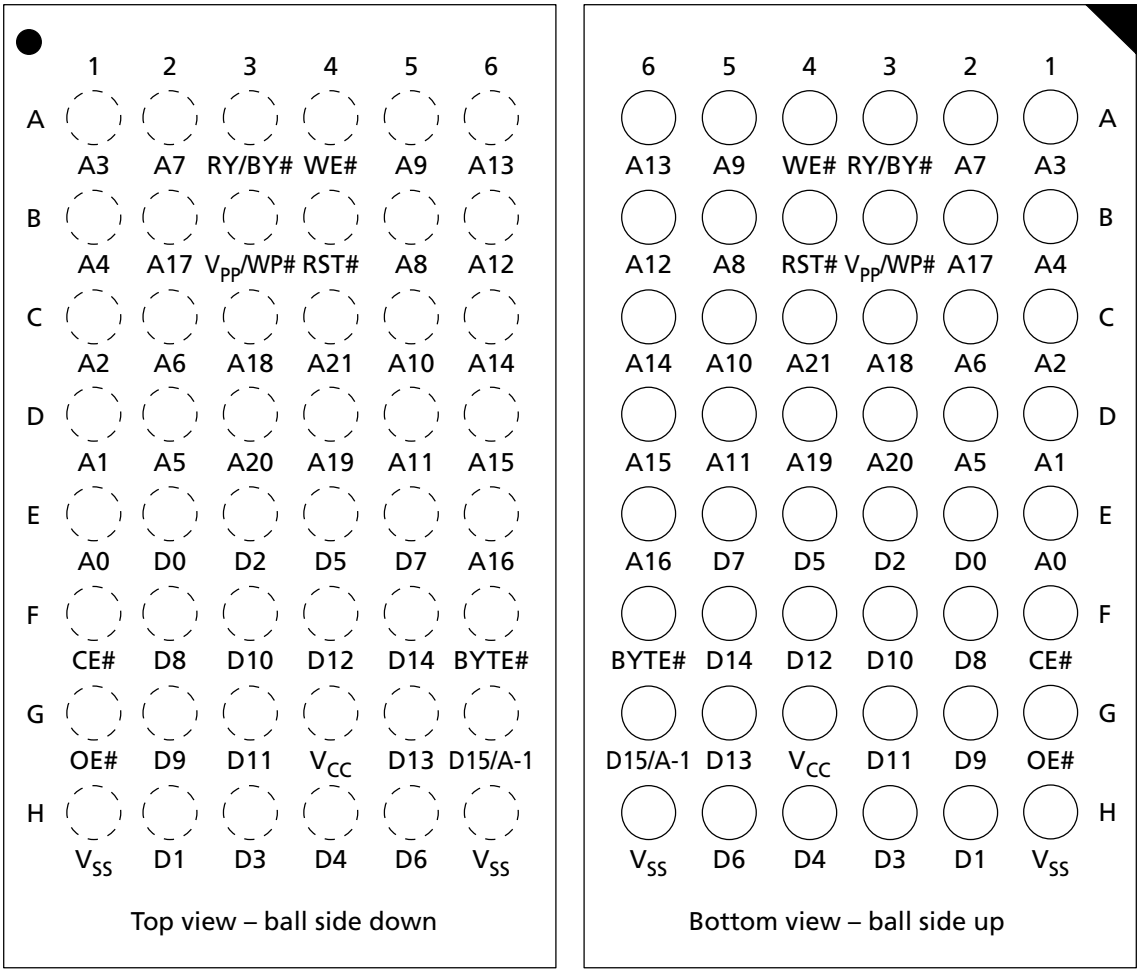

Note: 1. RFU = reserved for future use.

Micron Technology, Inc. reserves the right to change products or specifications without notice.
© 2013 Micron Technology, Inc. All rights reserved.

Figure 5: 64-Ball TFBGA

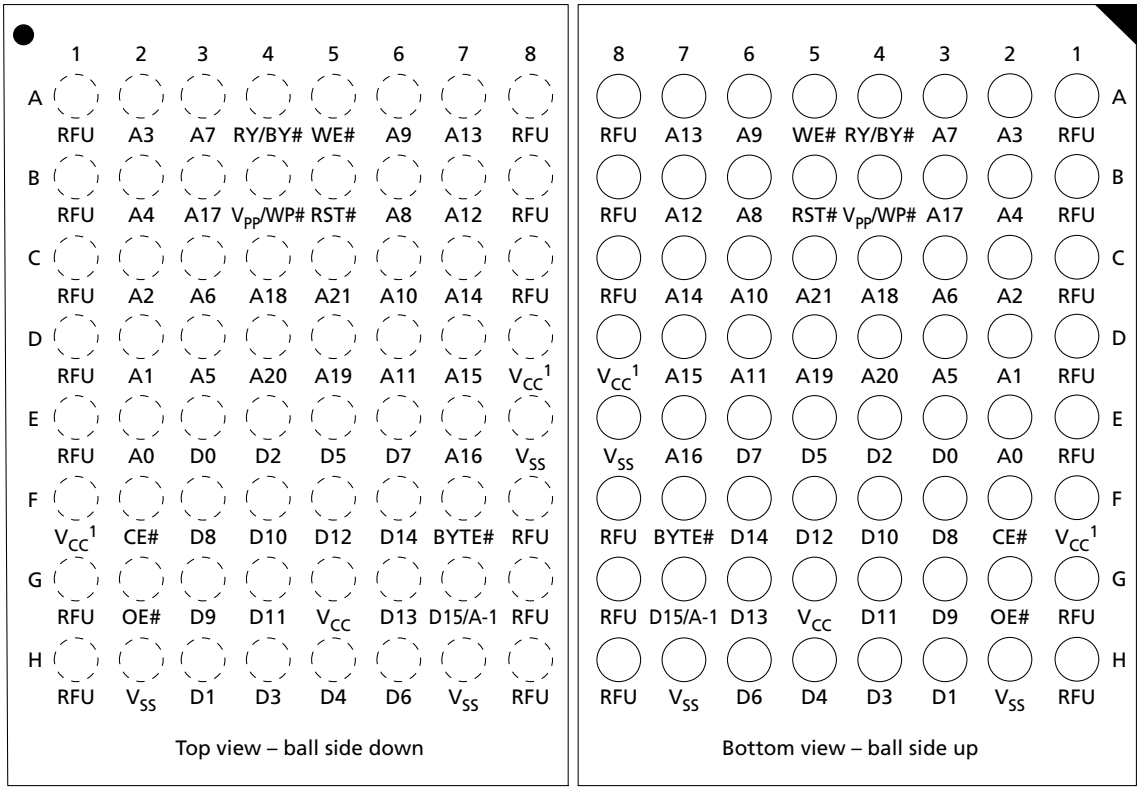

Notes: 1. RFU = reserved for future use.
2. Pads D8 and F1 are connected on the M29W640GT and M29W640GB devices.

Micron Technology, Inc. reserves the right to change products or specifications without notice.
© 2013 Micron Technology, Inc. All rights reserved.

Signal Descriptions

The following table is a comprehensive list of signals for this device family. All signals listed may not be supported on this device. See Signal Assignments for information specific to this device.

Table 6: Signal Descriptions

Name	Type	Description
A[MAX:0]	Input	**Address:** Select the cells in the memory array to access during bus READ operations. During bus WRITE operations they control the commands sent to the command interface of the program/erase controller.
CE#	Input	**Chip enable:** Activates the memory, allowing bus READ and bus WRTE operations to be performed. When CE# is HIGH, all other pins are ignored.
OE#	Input	**Output enable:** Controls the bus READ operation of the memory.
WE#	Input	**Write enable:** Controls the bus WRITE operation of the memory's command interface.
V_{PP}/WP#	Input	**V_{PP}/WP#:** Provides two functions: V_{PP} enables the memory to use an external high-voltage power supply to reduce the time required for UNLOCK BYPASS PROGRAM operations. WP# performs hardware protection by protection the last block at the end of the addressable area (M29W640GH) or the first block at the beginning of the addressable area (M29W640GL). It protects the last two blocks at the end of the addressable area (M29W640GT) and the first two boot blocks at the beginning of the addressable area (M29W640GB). V_{PP}/WP# may be left floating or unconnected (see DC Characteristics). When V_{PP}/WP# is LOW, the last or first block in the M29W640GH and M29W640GL, respectively, and the last or first two blocks in the M29W640GT and M29W640GB, respectively, are protected. PROGRAM and ERASE operations in this block are ignored while V_{PP}/WP# is LOW, even when RST# is at V_{ID}. When V_{PP}/WP# is HIGH, V_{IH}, the device reverts to the previous protection status of the outermost blocks. PROGRAM and ERASE operations can now modify the data in the outermost blocks unless the block is protected using block protection. Applying 12V to V_{PP}/WP# will temporarily unprotect any block previously protected (including the outermost blocks) using a high-voltage block protection technique (in-system or programmer technique). (See Hardware Protection for details. When V_{PP}/WP# is raised to V_{PP}, the device automatically enters the unlock bypass mode. When V_{PP}/WP# returns to V_{IH} or V_{IL}, normal operation resumes. During UNLOCK BYPASS PROGRAM operations, the device draws I_{PP} from the pin to supply the programming circuits. (See UNLOCK BYPASS Command.) The transitions from V_{IH} to V_{PP} and from V_{PP} to V_{IH} must be slower than ^{t}VHVPP (See the Accelerated Program Timing waveforms). Never raise V_{PP}/WP# to V_{PP} from any mode except read mode; otherwise, the device may be left in an indeterminate state. A 0.1µF capacitor should be connected between V_{PP}/WP# and the V_{SS} ground pin to decouple the current surges from the power supply. The PCB track widths must be sufficient to carry the currents required during an UNLOCK BYPASS PROGRAM operation, I_{PP}.

Micron Technology, Inc. reserves the right to change products or specifications without notice.
© 2013 Micron Technology, Inc. All rights reserved.

Table 6: Signal Descriptions (Continued)

Name	Type	Description
DQ15/A-1	I/O	**Data I/O or address input:** When HIGH, behaves as a data I/O pin (as DQ8–DQ14). When LOW, behaves as an address pin; DQ15A–1 LOW will select the LSB of the addressed word; DQ15A–1 HIGH will select the MSB. Throughout the text, consider references to the data I/O to include this pin when BYTE# is HIGH and references to the address inputs to include this pin when BYTE# is LOW, except when stated explicitly otherwise.
RST#	Input	**Reset/Block temporary unprotect:** Applies a hardware reset to the memory or temporarily unprotect all blocks that have been protected. Note that if V_{PP}/WP is at V_{IL}, then the last and the first block in the M29W640GH and M29W640GL, respectively, and the last two and first two blocks in the M29W640GT and M29W640GB, respectively, will remain protected, even if RST# is at V_{ID}. A hardware reset is achieved by holding RST# LOW for at least ^{t}PLPX. After RST# goes HIGH, the memory will be ready for bus READ and bus WRITE operations after ^{t}PHEL or ^{t}RHEL, whichever occurs last. (See Reset Characteristics for more details.) Holding RST# at V_{ID} will temporarily unprotect the protected blocks in the memory. PROGRAM and ERASE operations on all blocks will be possible. The transition from V_{IH} to V_{ID} must be slower than ^{t}PHPHH.
DQ[14:8]	I/O	**Data I/O:** Outputs the data stored at the selected address during a bus READ operation when BYTE# is HIGH. When BYTE# is LOW, these pins are not used and are High-Z. During bus WRITE operations, the command register does not use these bits. When reading the status register these bits should be ignored.
DQ[7:0]	I/O	**Data I/O:** Outputs the data stored at the selected address during a bus READ operation. During bus WRITE operations, they represent the commands sent to the command interface of the program/erase controller.
RY/BY#	Output	**Ready busy:** Open-drain output that identifies when the device is performing a PROGRAM or ERASE operation. During PROGRAM or ERASE operations, RY/BY# is LOW, and is High-Z during read mode, auto select mode, and erase suspend mode. After a hardware reset, bus READ and WRITE operations cannot begin until RY/BY# becomes High-Z. (See Reset Characteristics for more details.) The use of an open-drain output enables RY/BY# pins from several devices to be connected to a single pull-up resistor. A LOW will then indicate that one, or more, of the devices is busy.
BYTE#	Input	**BYTE#/Word organization select:** Switches between the x8 and x16 bus modes of the device. When LOW, the device is in x8 mode; when HIGH, it is in x16 mode.

Micron Technology, Inc. reserves the right to change products or specifications without notice.
© 2013 Micron Technology, Inc. All rights reserved.

Table 6: Signal Descriptions (Continued)

Name	Type	Description
V_{CC}	Supply	**Supply voltage:** Provides the power supply for all operations (READ, PROGRAM, and ERASE). The command interface is disabled when the V_{CC} supply voltage is less than the lockout voltage, V_{LKO}. This prevents bus WRITE operations from accidentally damaging the data during power-up, power-down, and power surges. If the program/erase controller is programming or erasing during this time, then the operation aborts and the memory contents being altered will be invalid. A 0.1 µF capacitor should be connected between the V_{CC} supply voltage pin and the V_{SS} ground pin to decouple the current surges from the power supply. The PCB track widths must be sufficient to carry the currents required during PROGRAM and ERASE operations, I_{CC3}.
V_{SS}	Supply	**Ground:** Reference for all voltage measurements. The device features two V_{SS} pins which must be both connected to the system ground.
RFU	–	**Reserved for future use:** RFUs should be not connected.

Table 7: Hardware Protection

V_{PP}/WP#	RST#		Function
V_{IL}	V_{IH}	M29W640GT and M29W640GB	Last 2 blocks at the end of the addressable area (M29W640GT) and first 2 blocks at the beginning of the addressable area (M29W640GB) protected from program/erase operations
		M29W640GH and M29W640GL	Last block at the end of the addressable area (M29W640GH) and first block at the beginning of the addressable area (M29W640GL) protected from program/erase operations
	V_{ID}	M29W640GT and M29W640GB	All blocks temporarily unprotected except the last 2 blocks at the end of the addressable area (M29W640GT) and first 2 blocks at the beginning of the addressable area (M29W640GB)
		M29W640GH and M29W640GL	All blocks temporarily unprotected except the last block at the end of the addressable area (M29W640GH) and first block at the beginning of the addressable area (M29W640GL)
V_{IH} or V_{ID}	V_{ID}		All blocks temporarily unprotected
V_{PP}	V_{IH} or V_{ID}		All blocks temporarily unprotected

Micron Technology, Inc. reserves the right to change products or specifications without notice.
© 2013 Micron Technology, Inc. All rights reserved.

Memory Organization

Memory Configuration

The memory array for M29W640GH and M29W640GL devices is organized into 128 uniform blocks of 64KB each for x8 and 32KW each for x16.

Uniform Block Memory Map, x16 – 64Mb Density

Table 8: x16 Uniform Blocks [127:0]

Block	Block Size	Address Range		Notes
		Start	End	
127	32KW	003F 8000	003F FFFF	
126	32KW	003F 0000	003F 7FFF	
125	32KW	003E 8000	003E FFFF	
124	32KW	003E 0000	003E 7FFF	
⋮	⋮	⋮	⋮	
3	32KW	0001 8000	0001 FFFF	1
2	32KW	0001 0000	0001 7FFF	
1	32KW	0000 8000	0000 FFFF	
0	32KW	0000 0000	0000 7FFF	

Note: 1. Used as the extended block addresses when the device is in extended block mode.

Uniform Block Memory Map, x8 – 64Mb Density

Table 9: x8 Uniform Blocks [127:0]

Block	Block Size	Address Range		Notes
		Start	End	
127	64KB	007F 0000	007F FFFF	
126	64KB	007E 0000	007E FFFF	
125	64KB	007D 0000	007D FFFF	
124	64KB	007C 0000	007C FFFF	
⋮	⋮	⋮	⋮	
3	64KB	0003 0000	0003 FFFF	1
2	64KB	0002 0000	0002 FFFF	
1	64KB	0001 0000	0001 FFFF	
0	64KB	0000 0000	0000 FFFF	

Note: 1. Used as the extended block addresses when the device is in extended block mode.

Micron Technology, Inc. reserves the right to change products or specifications without notice.
© 2013 Micron Technology, Inc. All rights reserved.

Bus Operations

Table 10: Bus Operations

Notes 1 and 2 apply to entire table

Operation	CE#	OE#	WE#	8-Bit Mode			16-Bit Mode	
				A[MAX:0], DQ15/A-1	DQ[14:8]	DQ[7:0]	A[MAX:0]	DQ15/A-1, DQ[14:0]
READ	L	L	H	Cell address	High-Z	Data output	Cell address	Data output
WRITE	L	H	L	Command address	High-Z	Data input[4]	Command address	Data input[4]
STANDBY	H	X	X	X	High-Z	High-Z	X	High-Z
OUTPUT DISABLE	X	H	H	X	High-Z	High-Z	X	High-Z

Notes:
1. Typical glitches of less than 5ns on CE# and WE# are ignored by the device and do not affect bus operations.
2. H = Logic level HIGH (V_{IH}); L = Logic level LOW (V_{IL}); X = HIGH or LOW.
3. If WP# = LOW, the highest/lowest block remains protected, depending on the line item.
4. Data input is required when issuing a command sequence or performing data polling or block protection.

Read

Bus READ operations read from the memory cells, registers, or CFI space. A valid READ operation requires setting the appropriate address on the address inputs, taking CE# and OE# LOW and holding WE# HIGH. Data I/O signals output the value.

Write

Bus WRITE operations write to the command interface. A valid WRITE operation requires setting the appropriate address on the address inputs. These are latched by the command interface on the falling edge of CE# or WE#, whichever occurs last. Values on data I/O signals are latched by the command interface on the rising edge of CE# or WE#, whichever occurs first. OE# must remain HIGH during the entire operation.

Standby and Automatic Standby

When the device is in read mode, driving CE# HIGH places the device in standby mode and drives data I/Os to High-Z. Supply current is reduced to standby (I_{CC2}), by holding CE# within V_{CC} ±0.2V.

During PROGRAM or ERASE operations, the device continues to use the program/erase supply current (I_{CC3}) until the operation completes.

Automatic standby enables low power consumption during read mode. When CMOS levels (V_{CC} ± 0.2 V) drive the bus, and following a READ operation and a period of inactivity specified in DC Characteristics, the memory enters automatic standby as internal supply current is reduced to I_{CC2}. Data I/O signals still output data if a READ operation is in progress.

Micron Technology, Inc. reserves the right to change products or specifications without notice.
© 2013 Micron Technology, Inc. All rights reserved.

Output Disable

Data I/Os are High-Z when OE# is HIGH.

Status Register

Bus READ operations from any address, always read the status register during PROGRAM and ERASE operations. It is also read during erase suspend when an address within a block being erased is accessed.

Data Polling Bit (DQ7)

The data polling bit can be used to identify whether the program/erase controller has successfully completed its operation or if it has responded to an erase suspend. The data polling bit is output on DQ7 when the status register is read.

During PROGRAM operations, DQ7 outputs the complement of the bit being programmed to DQ7. After successful completion of the PROGRAM operation, the memory returns to read mode and bus READ operations from the address just programmed output DQ7, not its complement.

During ERASE operations DQ7 outputs 0, the complement of the erased state of DQ7. After successful completion of the ERASE operation the memory returns to read mode.

In erase suspend mode, DQ7 will output a 1 during a bus READ operation within a block being erased. DQ7 will change from a 0 to a 1 when the program/erase controller has suspended the ERASE operation. The Data Polling Flowchart gives an example of how to use DQ7. A valid address is the address being programmed or an address within the block being erased.

Toggle Bit (DQ6)

The toggle bit can be used to identify whether the program/erase controller has successfully completed its operation or if it has responded to an erase suspend. The toggle bit is output on DQ6 when the status register is read.

During PROGRAM and ERASE operations, DQ6 changes from 0 to 1 to 0, and so forth, with successive bus READ operations at any address. After successful completion of the operation, the memory returns to read mode.

During erase suspend mode, DQ6 will output when addressing a cell within a block being erased. DQ6 will stop toggling when the program/erase controller has suspended the ERASE operation.

The Data Toggle Flowchart gives an example of how to use DQ6 and the toggle and alternative toggle waveforms describe toggle bit timing.

Error Bit (DQ5)

The error bit can be used to identify errors detected by the program/erase controller. DQ5 is set to 1 when a PROGRAM, BLOCK ERASE, or CHIP ERASE operation fails to write the correct data to the memory. If DQ5 is set, a READ/RESET command must be issued before other commands are issued. The error bit is output on DQ5 when the status register is read.

Micron Technology, Inc. reserves the right to change products or specifications without notice.
© 2013 Micron Technology, Inc. All rights reserved.

Note that the PROGRAM command cannot change a bit set to 0 back to 1 and attempting to do so will set DQ5 to 1. A bus READ operation to that address will show the bit remains 0. One of the ERASE commands must be used to set all the bits in a block or in the whole memory from 0 to 1.

Erase Timer Bit (DQ3)

The erase timer bit can be used to identify the start of program/erase controller operation during a BLOCK ERASE command. After the program/erase controller starts erasing, DQ3 is set to 1. Before the program/erase controller starts, DQ3 is set to 0 and additional blocks to be erased may be written to the command interface. The erase timer bit is output on DQ3 when the status register is read.

Alternative Toggle Bit (DQ2)

The alternative toggle bit can be used to monitor the program/erase controller during ERASE operations. It is output on DQ2 when the status register is read.

During CHIP ERASE and BLOCK ERASE operations, DQ2 changes from 0 to 1 to 0, and so forth, with successive bus READ operations from addresses within the blocks being erased. A protected block is treated the same as a block not being erased. After the operation completes, the memory returns to read mode.

During erase suspend, DQ2 changes from 0 to 1 to 0, and so forth, with successive bus READ operations from addresses within the blocks being erased. Bus READ operations to addresses within blocks not being erased will output the memory cell data as if in read mode.

After an ERASE operation that causes DQ5 to be set, DQ2 can be used to identify which block or blocks have caused the error. DQ2 changes from 0 to 1 to 0, and so forth, with successive bus READ operations from addresses within blocks that have not erased correctly. DQ2 does not change if the addressed block has erased correctly.

Write to Buffer and Program Abort Bit (DQ1)

DQ1 is set to 1 when a WRITE TO BUFFER AND PROGRAM operation aborts. Otherwise, DQ1 is set to 0. The WRITE TO BUFFER AND PROGRAM ABORT AND RESET command must be issued to return the device to read mode (see Command Interface for more information).

Table 11: Status Register Bits

Operation	Address	DQ7	DQ6	DQ5	DQ3	DQ2	DQ1	RY/BY#
PROGRAM	Any address	DQ7#	Toggle	0	–	–	0	0
PROGRAM DURING ERASE SUSPEND	Any address	DQ7#	Toggle	0	–	–	–	0
WRITE TO BUFFER AND PROGRAM ABORT	Any address	DQ7#	Toggle	0	–	–	1	0
WRITE TO BUFFER AND PROGRAM	Any address	DQ7#	Toggle	0	–	–	0	0
PROGRAM ERROR	Any address	DQ7#	Toggle	1	–	–	–	High-Z

Micron Technology, Inc. reserves the right to change products or specifications without notice.
© 2013 Micron Technology, Inc. All rights reserved.

Table 11: Status Register Bits (Continued)

Operation	Address	DQ7	DQ6	DQ5	DQ3	DQ2	DQ1	RY/BY#
CHIP ERASE	Any address	0	Toggle	0	1	Toggle	–	0
BLOCK ERASE BEFORE TIMEOUT	Erasing block	0	Toggle	0	0	Toggle	–	0
	Non-erasing block	0	Toggle	0	0	No Toggle	–	0
BLOCK ERASE	Erasing block	0	Toggle	0	1	Toggle	–	0
	Non-erasing block	0	Toggle	0	1	No Toggle	–	0
ERASE SUSPEND	Erasing block	1	No Toggle	0	–	Toggle	–	High-Z
	Non-erasing block	Data read as normal					–	High-Z
ERASE ERROR	Good block address	0	Toggle	1	1	No Toggle	–	High-Z
	Faulty block address	0	Toggle	1	1	Toggle	–	High-Z

Note: 1. Unspecified data bits should be ignored.

Micron Technology, Inc. reserves the right to change products or specifications without notice.
© 2013 Micron Technology, Inc. All rights reserved.

Figure 6: Data Polling Flowchart

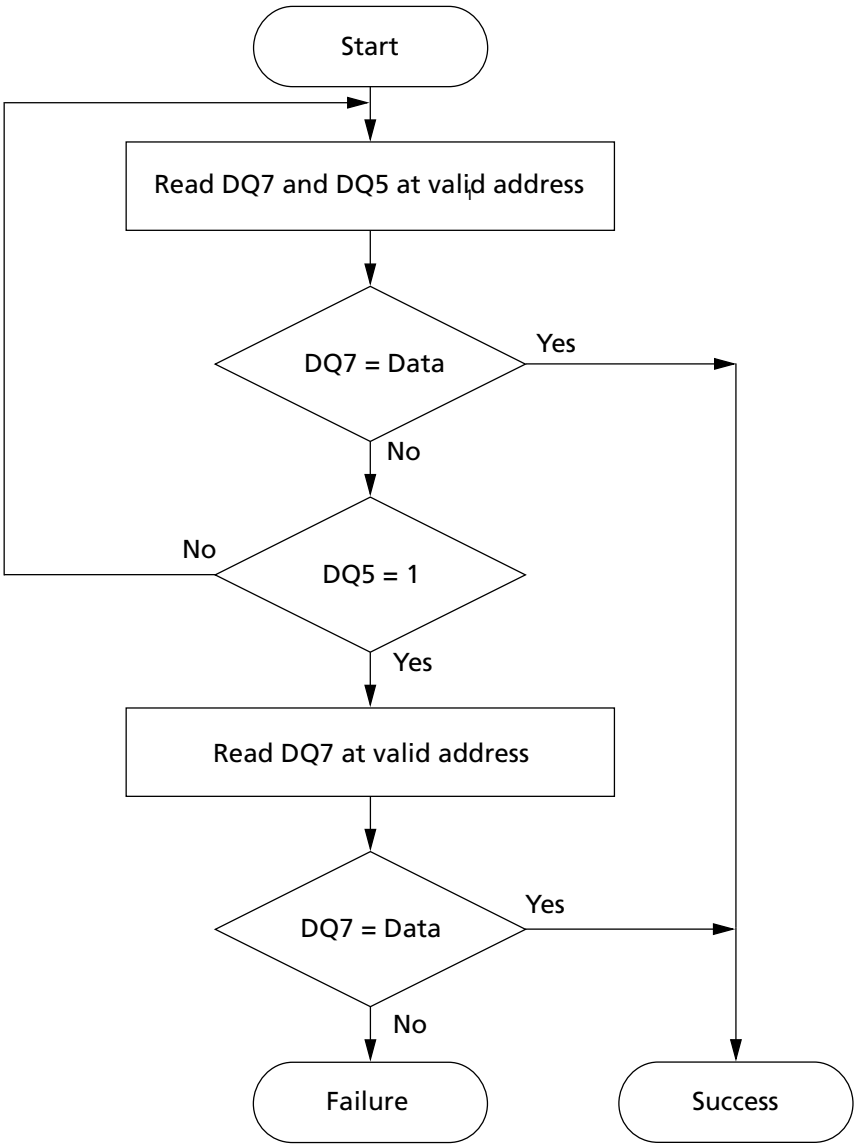

Micron Technology, Inc. reserves the right to change products or specifications without notice.
© 2013 Micron Technology, Inc. All rights reserved.

Figure 7: Data Toggle Flowchart

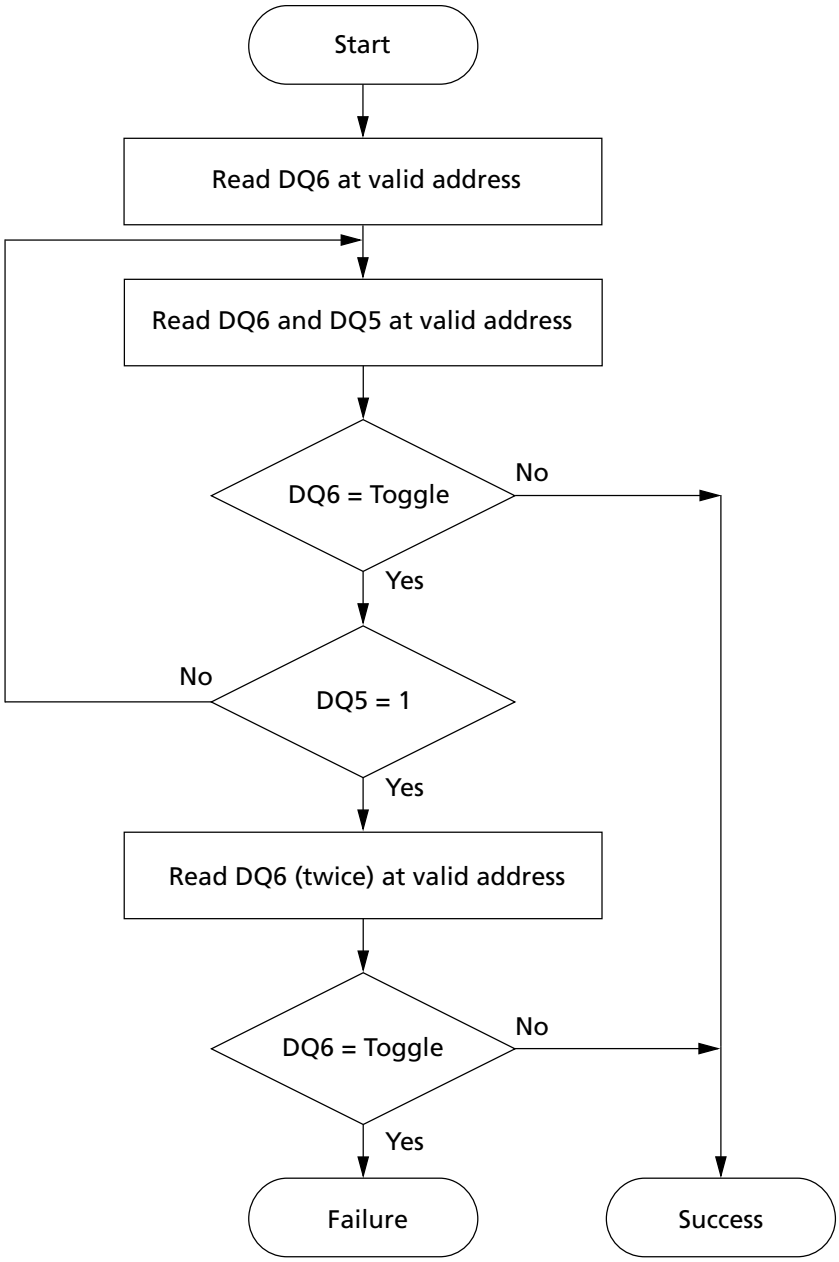

READ Operations

READ/RESET Command

The READ/RESET (F0h) command returns the device to read mode and resets the errors in the status register. One or three bus WRITE operations can be used to issue the READ/RESET command.

Micron Technology, Inc. reserves the right to change products or specifications without notice.
© 2013 Micron Technology, Inc. All rights reserved.

To return the device to read mode, this command can be issued between bus WRITE cycles before the start of a PROGRAM or ERASE operation. If the READ/RESET command is issued during the timeout of a BLOCK ERASE operation, the device requires up to 10µs to abort, during which time no valid data can be read.

READ CFI Command

The READ CFI (98h) command puts the device in read CFI mode and is valid only when the device is in read array or auto select mode. One bus WRITE cycle is required to issue the command.

Once in read CFI mode, bus READ operations will output data from the CFI memory area. A READ/RESET command must be issued to return the device to the previous mode (read array or auto select). A second READ/RESET command is required to put the device in read array mode from auto select mode.

Micron Technology, Inc. reserves the right to change products or specifications without notice.
© 2013 Micron Technology, Inc. All rights reserved.

AUTO SELECT Operations

AUTO SELECT Command

At power-up or after a hardware reset, the device is in read mode. It can then be put in auto select mode by issuing an AUTO SELECT (90h) command or by applying V_{ID} to A9. Auto select mode enables the following device information to be read:

- Electronic signature, which includes manufacturer and device code information.
- Block protection, which includes the block protection status and extended memory block protection indicator.

Electronic signature or block protection information is read by executing a READ operation with control signals and addresses set.

Auto select mode can be used by the programming equipment to automatically match a device with the application code to be programmed.

Three consecutive bus WRITE operations are required to issue an AUTO SELECT command. The device remains in auto select mode until a READ/RESET or READ CFI command is issued.

The device cannot enter auto select mode when a PROGRAM or ERASE operation is in progress (RY/BY# LOW). However, auto select mode can be entered if the PROGRAM or ERASE operation has been suspended by issuing a PROGRAM SUSPEND or ERASE SUSPEND command.

To enter auto select mode by applying V_{ID} to A9 (see the following tables).

Auto select mode is exited by performing a reset. The device returns to read mode unless it entered auto select mode after an ERASE SUSPEND or PROGRAM SUSPEND command, in which case it returns to erase or program suspend mode.

Table 12: Read Electronic Signature

Note 1 applies to entire table

Signal	READ Cycle						Notes
	Manufacturer Code	Device Code 1	Device Code 2		Device Code 3		
			GH/GL	GT/GB	GH/GT	GL/GB	
CE#	L	L	L	L	L	L	
OE#	L	L	L	L	L	L	
WE#	H	H	H	H	H	H	
Address Input, 8-Bit and 16-Bit							
A[MAX:10]	X	X	X	X	X	X	
A9	V_{ID}	V_{ID}	V_{ID}	V_{ID}	V_{ID}	V_{ID}	2
A8	X	X		X		X	
A[7:5]	L	L		L		L	
A4	X	X		X		X	
A[3:1]	L	L		H		H	
A0	L	H		L		H	
Address Input, 8-Bit Only							

Micron Technology, Inc. reserves the right to change products or specifications without notice.
© 2013 Micron Technology, Inc. All rights reserved.

Table 12: Read Electronic Signature (Continued)

Note 1 applies to entire table

Signal	READ Cycle						Notes
	Manufacturer Code	Device Code 1	Device Code 2		Device Code 3		
			GH/GL	GT/GB	GH/GT	GL/GB	
DQ[15]/A-1	X	X		X		X	
Data I/O, 8-Bit Only							
DQ[14:8]	X	X		X		X	
DQ[7:0]	20h	7Eh	0Ch	10h	01h	00h	
Data I/O, 16-Bit Only							
DQ[15]/A-1, and DQ[14:0]	0020h	227Eh	220Ch	2210h	2201h	2200h	

Notes: 1. H = Logic level HIGH (V_{IH}); L = Logic level LOW (V_{IL}); X = HIGH or LOW.
2. When using the AUTO SELECT command to enter auto select mode, applying V_{ID} to A9 is not required. A9 can be either V_{IL} or V_{IH}.

Table 13: Block Protection

Note 1 applies to entire table

Operation	CE#	OE#	WE#	Address Input												Data I/O
				A[MAX]	A15	A[14:13]	A12	A[11:10]	A9	A[8:7]	A6	A[5:4]	A[3:2]	A1	A0	DQ[15]/A-1, DQ[14:0]
BLOCK PROTECT (Group)	L	V_{ID}	LP	Block address				X	V_{ID}	X						X
CHIP UNPROTECT	V_{ID}	V_{ID}	LP	X	H	X	H	X	V_{ID}	X						X
VERIFY BLOCK PROTECTION	L	L	H	Block address				X	V_{ID}	X	L	X	L	H	L	Pass = xx01h Retry = xx00h
VERIFY BLOCK UNPROTECT	L	L	H	Block address				X	V_{ID}	X	H	X	L	H	L	Retry = xx01h Pass = xx00h
READ BLOCK PROTECTION STATUS	L	L	H	Block address				X	V_{ID}	X	L	X	L	H	L	Protected (x8) = 01h Unprotected (x8) = 00h Protected (x16) = 0001h Unprotected (x16) = 0000h

Micron Technology, Inc. reserves the right to change products or specifications without notice.
© 2013 Micron Technology, Inc. All rights reserved.

Table 13: Block Protection (Continued)

Note 1 applies to entire table

Operation	CE#	OE#	WE#	Address Input A[MAX]	A15	A[14:13]	A12	A[11:10]	A9	A[8:7]	A6	A[5:4]	A[3:2]	A1	A0	Data I/O DQ[15]/A-1, DQ[14:0]
GL, GT, GB																
READ EXTENDED MEMORY BLOCK verify CODE	L	L	H	Block address				X	V_{ID}	X	L	X	L	H	H	Factory-locked = 98h Customer-lockable = 18h
GH																
READ EXTENDED memory BLOCK verify CODE	L	L	H	Block address				X	V_{ID}	X	L	X	L	H	H	Factory-locked = 81h Customer-lockable = 01h

Note: 1. H = Logic level HIGH (V_{IH}); L = Logic level LOW (V_{IL}); X = HIGH or LOW.

Micron Technology, Inc. reserves the right to change products or specifications without notice.
© 2013 Micron Technology, Inc. All rights reserved.

Command Interface

All bus WRITE operations to the memory are interpreted by the command interface. Commands consist of one or more sequential bus WRITE operations. Failure to observe a valid sequence of bus WRITE operations will result in the memory returning to read mode. The long command sequences are imposed to maximize data security.

The address used for the commands changes depending on whether the memory is in 16-bit or 8-bit mode. See the x8 and x16 command tables, depending on the configuration that is being used, for a summary of the commands.

READ/RESET Command

The READ/RESET command returns the memory to its read mode. It also resets the errors in the status register. Either one or three bus WRITE operations can be used to issue the READ/RESET command.

The READ/RESET command can be issued, between bus WRITE cycles before the start of a PROGRAM or ERASE operation, to return the device to read mode. If the READ/RESET command is issued during the timeout of a BLOCK ERASE operation, then the device will take up to 10µs to abort. During the abort period, no valid data can be read from the device. The READ/RESET command will not abort an ERASE operation when issued while in erase suspend.

AUTO SELECT Command

The AUTO SELECT command is used to read the manufacturer code, the device code, the block protection status, and the extended memory block verify code. Three consecutive bus WRITE operations are required to issue the AUTO SELECT command. After the AUTO SELECT command is issued, the memory remains in auto select mode until a READ/RESET command is issued. READ CFI QUERY and READ/RESET commands are accepted in auto select mode, all other commands are ignored.

In auto select mode, the manufacturer code and the device code can be read by using a bus READ operation with addresses and control signals set, as shown Bus Operations, except for A9 (which is "Don’t Care").

The block protection status of each block can be read using a bus READ operation with addresses and control signals set, as shown in Bus Operations, except for A9 (which is "Don’t Care"). If the addressed block is protected, then 01h is output on DQ0–DQ7; otherwise, 00h is output (in 8-bit mode).

The protection status of the extended memory block, or extended memory block verify code, can be read using a bus READ operation with addresses and control signals, except for A9 (which is "Don’t Care"). If the extended block is "factory-locked." then 80h is output on DQ0–DQ7; otherwise, 00h is output (8-bit mode).

READ CFI QUERY Command

The READ CFI QUERY command is used to read data from the CFI. This command is valid when the device is in the read array mode, or when the device is in auto select mode.

One bus WRITE cycle is required to issue the READ CFI QUERY command. After the command is issued, subsequent bus READ operations read from the CFI.

Micron Technology, Inc. reserves the right to change products or specifications without notice.
© 2013 Micron Technology, Inc. All rights reserved.

The READ/RESET command must be issued to return the device to the previous mode (the read array mode or auto select mode). A second READ/RESET command would be needed if the device is to be put in the read array mode from auto selected mode.

PROGRAM Command

The PROGRAM command can be used to program a value to one address in the memory array at a time. The command requires four bus WRITE operations; the final WRITE operation latches the address and data, and starts the program/erase controller.

Programming can be suspended and then resumed by issuing a PROGRAM SUSPEND command and a PROGRAM RESUME command, respectively.

If the address falls in a protected block, then the PROGRAM command is ignored, the data remains unchanged. The status register is never read and no error condition is given.

During a PROGRAM operation, the memory will ignore all commands. It is not possible to issue any command to abort or pause the operation. Bus READ operations during the PROGRAM operation will output the status register on the data I/Os. (See Status Register for more details.)

After the PROGRAM operation has completed, the memory will return to the read mode, unless an error has occurred. When an error occurs, the memory will continue to output the status register. A READ/RESET command must be issued to reset the error condition and return to read mode.

Note that the PROGRAM command cannot change a bit set to 0 back to 1. One of the ERASE commands must be used to set all the bits in a block or in the whole memory from 0 to 1. (Refer to Program/Erase Characteristics.)

PROGRAM SUSPEND Command

The PROGRAM SUSPEND command allows the system to interrupt a PROGRAM operation so that data can be read from any block. When the PROGRAM SUSPEND command is issued during a PROGRAM operation, the device suspends the PROGRAM operation within the program suspend latency time and updates the status register bits (see Program/Erase Characteristics).

After the PROGRAM operation has been suspended, the system can read array data from any address. However, data read from program-suspended addresses is not valid.

The PROGRAM SUSPEND command may also be issued during a PROGRAM operation while an erase is suspended. In this case, data may be read from any addresses not in ERASE SUSPEND or PROGRAM SUSPEND. If a read is needed from the extended block area (one-time program area), the user must use the proper command sequences to enter and exit this region.

The system may also issue the AUTO SELECT command sequence when the device is in the program suspend mode. The system can read as many auto select codes as required. When the device exits the auto select mode, the device reverts to the program suspend mode, and is ready for another valid operation.

Micron Technology, Inc. reserves the right to change products or specifications without notice.
© 2013 Micron Technology, Inc. All rights reserved.

PROGRAM RESUME Command

After the PROGRAM RESUME command is issued, the device reverts to programming. The controller can determine the status of the PROGRAM operation using the DQ7 or DQ6 status bits, just as in the standard PROGRAM operation.

The system must write the PROGRAM RESUME command, to exit the program suspend mode and to continue the programming operation.

Further issuing of the RESUME command is ignored. Another PROGRAM SUSPEND command can be written after the device has resumed programming.

Fast Program Commands

There are five fast program commands available to improve the programming throughput, by writing several adjacent words or bytes in parallel:

- QUADRUPLE and OCTUPLE BYE PROGRAM, available for x8 operations
- DOUBLE and QUADRUPLE WORD PROGRAM, available for x16 operations
- WRITE TO BUFFER AND PROGRAM

Fast program commands can be suspended and then resumed by issuing a PROGRAM SUSPEND command and a PROGRAM RESUME command, respectively.

DOUBLE BYTE PROGRAM Command

The DOUBLE BYTE PROGRAM command is used to write a page of two adjacent bytes in parallel. The two bytes must differ only in DQ15A-1. Three bus WRITE cycles are necessary to issue the DOUBLE BYTE PROGRAM command:

The first bus cycle sets up the DOUBLE BYTE PROGRAM command; the second bus cycle latches the address and the data of the first byte to be written; and the third bus cycle latches the address and the data of the second byte to be written.

It is not necessary to raise V_{PP}/WP# to 12V before issuing this command.

QUADRUPLE BYTE PROGRAM Command

The QUADRUPLE BYTE PROGRAM command is used to write a page of four adjacent bytes in parallel. The four bytes must differ only for addresses A0, DQ15A-1. Five bus write cycles are necessary to issue the QUADRUPLE BYTE PROGRAM command:

The first bus cycle sets up the QUADRUPLE BYTE PROGRAM command; the second bus cycle latches the address and the data of the first byte to be written; the third bus cycle latches the address and the data of the second byte to be written; the fourth bus cycle latches the address and the data of the third byte to be written; and the fifth bus cycle latches the address and the data of the fourth byte to be written and starts the program/erase controller.

It is not necessary to raise V_{PP}/WP# to 12V before issuing this command.

OCTUPLE BYTE PROGRAM Command

This is used to write eight adjacent bytes, in x8 mode, simultaneously. The addresses of the eight bytes must differ only in A1, A0 and DQ15A-1.

Micron Technology, Inc. reserves the right to change products or specifications without notice.
© 2013 Micron Technology, Inc. All rights reserved.

12V must be applied to V_{PP}/Wp# prior to issuing an OCTUPLE BYTE PROGRAM command. Care must be taken because applying a 12V voltage to V_{PP}/WP#, because it will temporarily unprotect any protected block.

Nine bus WRITE cycles are necessary to issue the command:

The first bus cycle sets up the command; the second bus cycle latches the address and the data of the first byte to be written; the third bus cycle latches the address and the data of the second byte to be written; the fourth bus cycle latches the address and the data of the third byte to be written, the fifth bus cycle latches the address and the data of the fourth byte to be written; the sixth bus cycle latches the address and the data of the fifth byte to be written; the seventh bus cycle latches the address and the data of the sixth byte to be written; the eighth bus cycle latches the address and the data of the seventh byte to be written; and the ninth bus cycle latches the address and the data of the eighth byte to be written and starts the program/erase controller.

DOUBLE WORD PROGRAM Command

The DOUBLE WORD PROGRAM command is used to write a page of two adjacent words in parallel. The two words must differ only for the address A0.

Three bus WRITE cycles are necessary to issue the DOUBLE WORD PROGRAM command:

The first bus cycle sets up the DOUBLE WORD PROGRAM command; the second bus cycle latches the address and the data of the first word to be written; and the third bus cycle latches the address and the data of the second word to be written and starts the program/erase controller.

After the PROGRAM operation has completed, the memory will return to the read mode, unless an error has occurred. When an error occurs, bus READ operations will continue to output the status register. A READ/RESET command must be issued to reset the error condition and return to read mode.

Note that the fast program commands cannot change a bit set to 0 back to 1. One of the ERASE commands must be used to set all the bits in a block or in the whole memory from 0 to 1.

Typical program times are given in Program/Erase Characteristics.

Note:

It is not necessary to raise V_{PP}/WP# to 12V before issuing this command.

QUADRUPLE WORD PROGRAM Command

This is used to write a page of four adjacent words (or 8 adjacent bytes), in x16 mode, simultaneously. The addresses of the four words must differ only in A1 and A0.

12V must be applied to V_{PP}/WP# prior to issuing a QUADRUPLE BYTE PROGRAM command. Care must be taken because applying a 12V voltage to V_{PP}/WP#, because it will temporarily unprotect any protected block.

Five bus WRITE cycles are necessary to issue the command:

The first bus cycle sets up the command; the second bus cycle latches the address and the data of the first word to be written; the third bus cycle latches the address and the data of the second word to be written; the fourth bus cycle latches the address and the

Micron Technology, Inc. reserves the right to change products or specifications without notice.
© 2013 Micron Technology, Inc. All rights reserved.

data of the third word to be written; and the fifth bus cycle latches the address and the data of the fourth word to be written and starts the program/erase controller.

WRITE TO BUFFER AND PROGRAM Command

The WRITE TO BUFFER AND PROGRAM command makes use of the device's 32-byte write buffer to speed up programming. 16 words/32 bytes can be loaded into the write buffer. Each write buffer has the same A4–A22 addresses. The WRITE TO BUFFER AND PROGRAM command dramatically reduces system programming time compared to the standard nonbuffered PROGRAM command.

When issuing a WRITE TO BUFFER AND PROGRAM command, V_{PP}/WP# can be either held HIGH or raised to V_{PPH}.

Five successive steps are required to issue the WRITE TO BUFFER AND PROGRAM command: The WRITE TO BUFFER AND PROGRAM command starts with two UNLOCK cycles. The third bus WRITE cycle sets up the WRITE TO BUFFER AND PROGRAM command. The setup code can be addressed to any location within the targeted block. The fourth bus WRITE cycle sets up the number of words to be programmed. Value n is written to the same block address, where $n + 1$ is the number of words to be programmed. The value of $n + 1$ must not exceed the size of the write buffer or the operation will abort. The fifth cycle loads the first address and data to be programmed. The value of n bus WRITE cycles is used to load the address and data for each word into the write buffer. Addresses must lie within the range from the start address+1 to the start address + n - 1. Optimum performance is obtained when the start address corresponds to a 64-byte boundary. If the start address is not aligned to a 64-byte boundary, the total programming time is doubled.

All the addresses used in the WRITE TO BUFFER AND PROGRAM operation must lie within the same page. If an address is written several times during a WRITE TO BUFFER AND PROGRAM operation, the address/data counter will be decremented at each data load operation, and the data will be programmed to the last word loaded into the buffer. Invalid address combinations or failing to follow the correct sequence of bus WRITE cycles will abort the WRITE TO BUFFER AND PROGRAM operation.

DQ1, DQ5, DQ6, DQ7 can be used to monitor the device status during a WRITE TO BUFFER AND PROGRAM operation. It is possible to detect PROGRAM operation fails when changing programmed data from 0 to 1; that is, when reprogramming data in a portion of memory already programmed. The resulting data will be the logical OR between the previous value and the current value.

To program the content of the write buffer, this command must be followed by a WRITE TO BUFFER AND PROGRAM CONFIRM command.

A WRITE TO BUFFER AND PROGRAM ABORT AND RESET command must be issued to abort the WRITE TO BUFFER AND PROGRAM operation and reset the device in read mode.

The write buffer programming sequence can be aborted in the following ways:

- Load a value that is greater than the page buffer size during the number of locations to program step
- Write to an address in a block different than the one specified during the WRITE-BUFFER-LOAD command
- Write an address/data pair to a different write-buffer-page than the one selected by the starting address during the write buffer data loading stage of the operation

Micron Technology, Inc. reserves the right to change products or specifications without notice.
© 2013 Micron Technology, Inc. All rights reserved.

- Write data other than the CONFIRM command after the specified number of data load cycles.

The abort condition is indicated by DQ1 = 1, DQ7 = DATA# (for the last address location loaded), DQ6 = toggle, and DQ5 = 0. A WRITE TO BUFFER ABORT AND RESET command sequence must be written to reset the device for the next operation. Note that the full three-cycle WRITE TO BUFFER ABORT AND RESET command sequence is required when using write-buffer-programming features in unlock bypass mode.

WRITE TO BUFFER AND PROGRAM CONFIRM Command

The WRITE TO BUFFER AND PROGRAM CONFIRM command is used to confirm a WRITE TO BUFFER AND PROGRAM command and to program the $n + 1$ words loaded in the write buffer by this command.

WRITE TO BUFFER AND PROGRAM ABORT AND RESET Command

The WRITE TO BUFFER AND PROGRAM ABORT AND RESET command is used to reset the device after a WRITE TO BUFFER AND PROGRAM command has been aborted.

UNLOCK BYPASS Command

The UNLOCK BYPASS command is used in conjunction with the UNLOCK BYPASS PROGRAM command to program the memory faster than with the standard PROGRAM commands. When the cycle time to the device is long, considerable time saving can be made by using these commands. Three bus WRITE operations are required to issue the UNLOCK BYPASS command.

After the UNLOCK BYPASS command has been issued, the memory will only accept the UNLOCK BYPASS PROGRAM command and the UNLOCK BYPASS RESET command. The memory can be read as if in read mode.

When V_{PP} is applied to V_{PP}/WP#, the memory automatically enters the unlock bypass mode and the UNLOCK BYPASS PROGRAM command can be issued immediately.

UNLOCK BYPASS PROGRAM Command

The UNLOCK BYPASS command is used in conjunction with the UNLOCK BYPASS PROGRAM command to program the memory. When the cycle time to the device is long, considerable time saving can be made by using these commands. Three bus WRITE operations are required to issue the UNLOCK BYPASS command.

After the UNLOCK BYPASS command has been issued, the memory will only accept the UNLOCK BYPASS PROGRAM command and the UNLOCK BYPASS RESET command. The memory can be read as if in read mode.

The memory offers accelerated PROGRAM operations through V_{PP}/WP#. When the system asserts V_{PP} on V_{PP}/WP#, the memory automatically enters the unlock bypass mode. The system may then write the two-cycle UNLOCK BYPASS PROGRAM command sequence. The memory uses the higher voltage on V_{PP}/WP# to accelerate the UNLOCK BYPASS PROGRAM operation.

Never raise V_{PP}/WP# to V_{PP} from any mode except read mode; otherwise, the memory may be left in an indeterminate state.

Micron Technology, Inc. reserves the right to change products or specifications without notice.
© 2013 Micron Technology, Inc. All rights reserved.

UNLOCK BYPASS RESET Command

The UNLOCK BYPASS RESET command can be used to return to read/reset mode from unlock bypass mode. Two bus WRITE operations are required to issue the UNLOCK BYPASS RESET command. A READ/RESET command does not exit from unlock bypass mode.

CHIP ERASE Command

The CHIP ERASE command can be used to erase the entire chip. Six bus WRITE operations are required to issue the CHIP ERASE command and start the program/erase controller.

If any blocks are protected, then these are ignored and all the other blocks are erased. If all of the blocks are protected the CHIP ERASE operation appears to start but will terminate within about 100µs, leaving the data unchanged. No error condition is given when protected blocks are ignored.

During the ERASE operation the memory will ignore all commands, including the ERASE SUSPEND command. It is not possible to issue any command to abort the operation. All bus READ operations during the CHIP ERASE operation will output the status register on the data I/Os.

After the CHIP ERASE operation has completed, the memory will return to the read mode, unless an error has occurred. When an error occurs the memory will continue to output the status register. A READ/RESET command must be issued to reset the error condition and return to read mode.

The CHIP ERASE command sets all of the bits in unprotected blocks of the memory to 1. All previous data is lost.

BLOCK ERASE Command

The BLOCK ERASE command can be used to erase a list of one or more blocks. Six bus WRITE operations are required to select the first block in the list. Each additional block in the list can be selected by repeating the sixth bus WRITE operation using the address of the additional block. The BLOCK ERASE operation starts the program/erase controller about 50µs after the last bus WRITE operation. After the program/erase controller starts, it is not possible to select any more blocks. Each additional block must therefore be selected within 50µs of the last block. The 50µs timer restarts when an additional block is selected. The status register can be read after the sixth bus WRITE operation. (See the status register section for details on how to identify whether the program/erase controller has started the BLOCK ERASE operation.)

If any selected blocks are protected, then these are ignored and all the other selected blocks are erased. If all of the selected blocks are protected, the BLOCK ERASE operation appears to start but will terminate within about 100µs, leaving the data unchanged. No error condition is given when protected blocks are ignored.

During the BLOCK ERASE operation, the memory will ignore all commands except the ERASE SUSPEND command. (Typical block erase times are given in the Program/Erase Characteristics.) All bus READ operations during the BLOCK ERASE operation will output the status register on the data I/Os.

After the BLOCK ERASE operation has completed, the memory will return to the read mode, unless an error has occurred. When an error occurs, the memory will continue to

Micron Technology, Inc. reserves the right to change products or specifications without notice.
© 2013 Micron Technology, Inc. All rights reserved.

output the status register. A READ/RESET command must be issued to reset the error condition and return to read mode.

The BLOCK ERASE command sets all of the bits in the unprotected selected blocks to 1. All previous data in the selected blocks is lost.

ERASE SUSPEND Command

The ERASE SUSPEND command may be used to temporarily suspend a BLOCK ERASE operation and return the memory to read mode. The command requires one bus WRITE operation.

The program/erase controller will suspend within the erase suspend latency time of the ERASE SUSPEND command being issued. After the program/erase controller has stopped, the memory will be set to read mode and the erase will be suspended. If the ERASE SUSPEND command is issued during the period when the memory is waiting for an additional block (before the program/erase controller starts), then the erase is suspended immediately and will start immediately when the ERASE RESUME command is issued. It is not possible to select any further blocks to erase after the ERASE RESUME.

During ERASE SUSPEND, it is possible to read and program cells in blocks that are not being erased; both READ and PROGRAM operations behave as normal on these blocks. If any attempt is made to program in a protected block or in the suspended block, then the PROGRAM command is ignored and the data remains unchanged. The status register is not read and no error condition is given. Reading from blocks that are being erased will output the status register.

It is also possible to issue the AUTO SELECT, READ CFI QUERY, and UNLOCK BYPASS commands during an ERASE SUSPEND. The READ/RESET command must be issued to return the device to read array mode before the RESUME command will be accepted.

ERASE RESUME Command

The ERASE RESUME command must be used to restart the program/erase controller after an erase suspend. The device must be in read array mode before the RESUME command will be accepted. An erase can be suspended and resumed more than once.

ENTER EXTENDED BLOCK Command

The device has an extra 256-byte block (extended block) that can only be accessed using the ENTER EXTENDED BLOCK command. Three bus WRITE cycles are required to issue the ENTER EXTENDED BLOCK command. After the command has been issued, the device enters extended block mode where all bus READ or WRITE operations to the boot block addresses access the extended block. The extended block (with the same address as the boot blocks) cannot be erased, and can be treated as OTP memory. In extended block mode, the boot blocks are not accessible.

The extended block can be protected; however, once protected, the protection cannot be undone.

EXIT EXTENDED BLOCK Command

The EXIT EXTENDED BLOCK command is used to exit from the extended block mode and return the device to read mode. Four bus WRITE operations are required to issue the command.

Micron Technology, Inc. reserves the right to change products or specifications without notice.
© 2013 Micron Technology, Inc. All rights reserved.

BLOCK PROTECT and CHIP UNPROTECT Commands

Groups of blocks can be protected against accidental program or erase. (See Memory Organization for the protection groups.) The whole chip can be unprotected to allow the data inside the blocks to be changed.

BLOCK PROTECT Command

Block protection can be used to prevent any operation from modifying the data stored in the Flash. Each block can be protected individually. Once protected, PROGRAM and ERASE operations on the block fail to change the data.

There are three techniques that can be used to control block protection. These are programmer technique, in-system technique, and temporary unprotect. Temporary unprotect is controlled by RST#.

Unlike the command interface of the program/erase controller, the techniques for protecting and unprotecting blocks change between different Flash memory suppliers. Care should be taken when changing drivers for one part to work on another.

Programmer Technique

The programmer technique uses high voltage levels (V^{ID}) on some of the bus pins. These cannot be achieved using a standard microprocessor bus; therefore, the technique is recommended only for use in programming equipment.

To protect a block, follow the steps in the following figure. To unprotect the whole chip, it is necessary to protect all of the blocks first, then all blocks can be unprotected at the same time. (See the Programmer Equipment Chip Protect Flowchart.)

The timing on these flowcharts is critical. Care should be taken to ensure that, where a pause is specified, it is followed as closely as possible. Do not abort the procedure before reaching the end. Chip unprotect can take several seconds and a user message should be provided to show that the operation is progressing.

Micron Technology, Inc. reserves the right to change products or specifications without notice.
© 2013 Micron Technology, Inc. All rights reserved.

Figure 8: Programmer Equipment Block Protect Flowchart

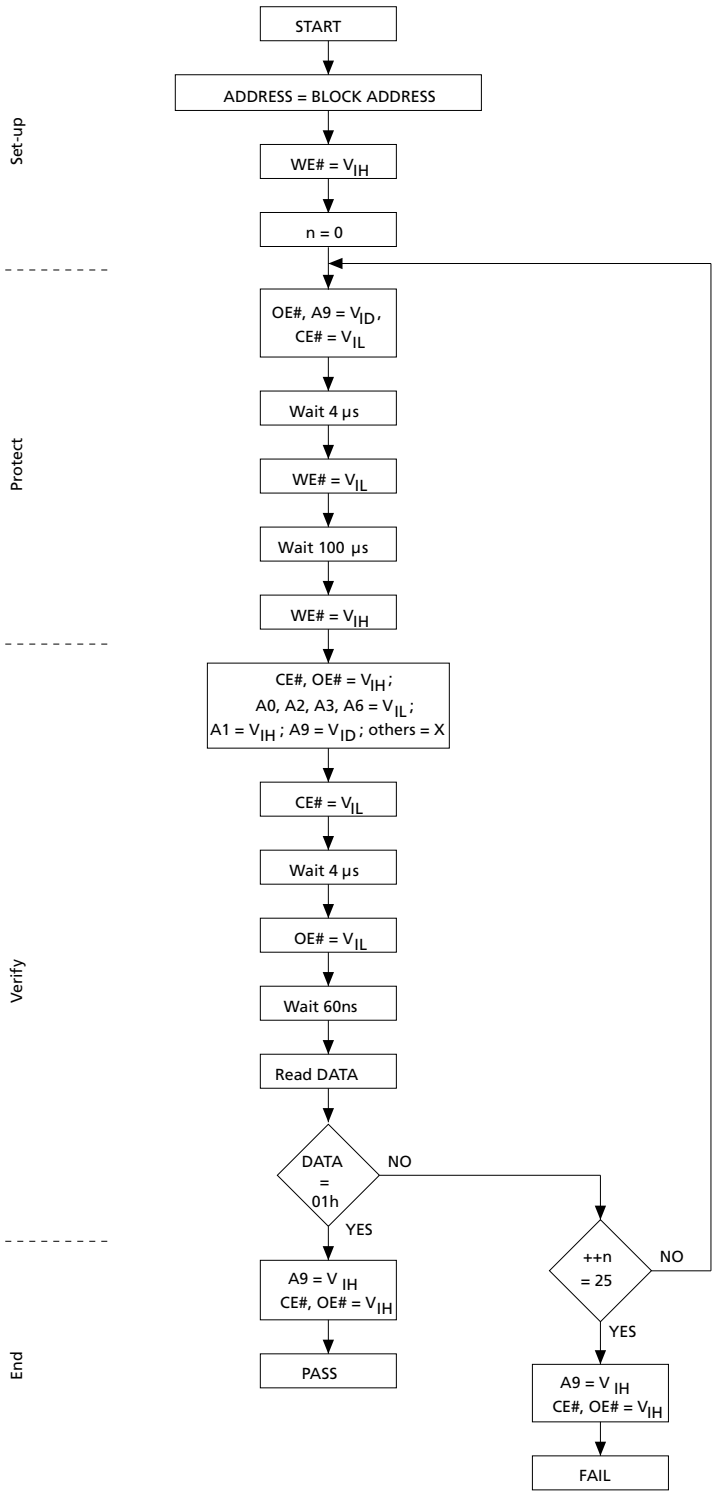

Micron Technology, Inc. reserves the right to change products or specifications without notice.
© 2013 Micron Technology, Inc. All rights reserved.

Figure 9: Programmer Equipment Chip Unprotect Flowchart

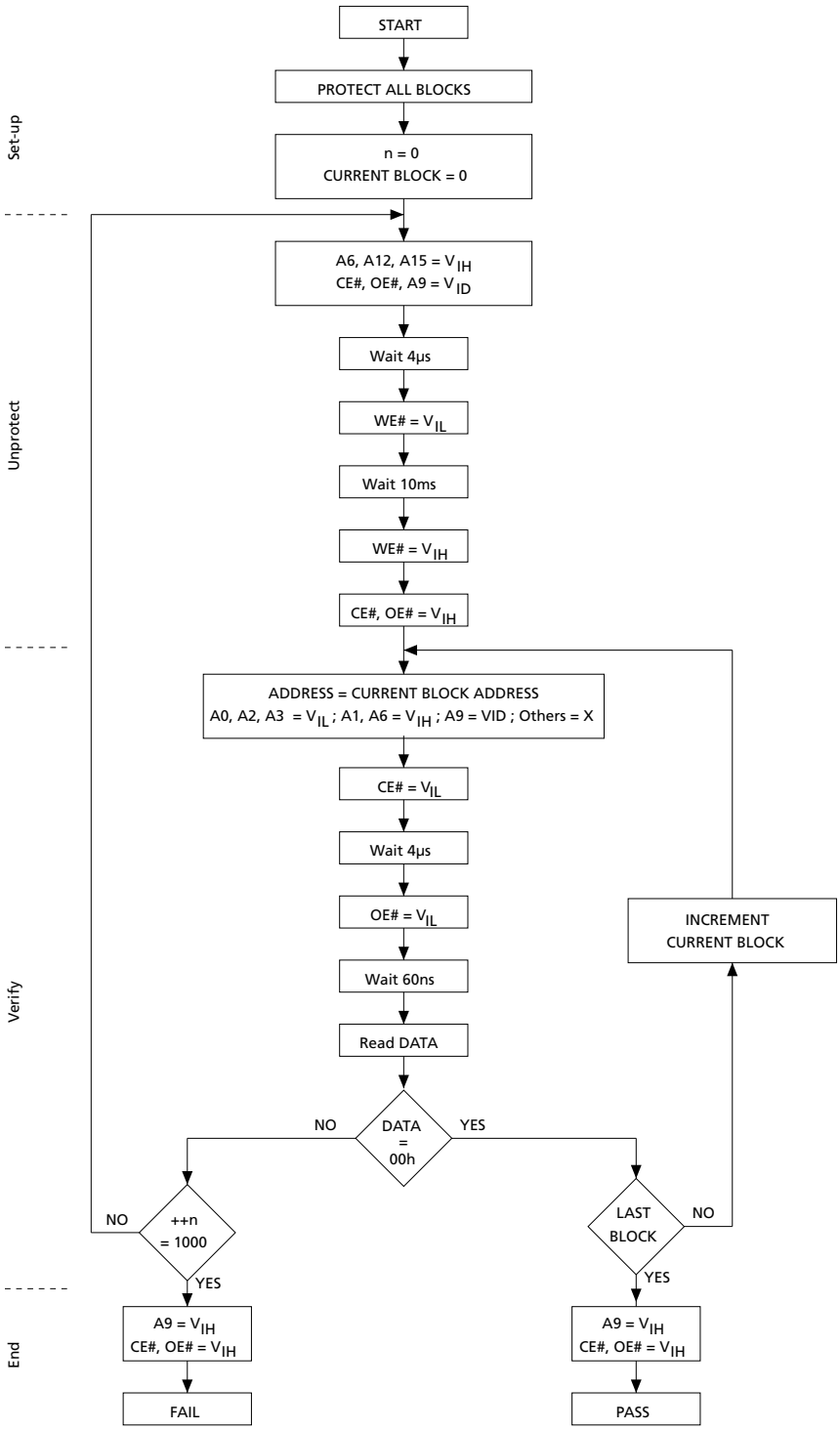

Micron Technology, Inc. reserves the right to change products or specifications without notice.
© 2013 Micron Technology, Inc. All rights reserved.

Table 14: Programmer Technique Bus Operations

Notes 1 and 2 apply to entire table

Operation	CE#	OE#	WE#	Address Inputs A[MAX:0]	Data I/Os DQ15/A-1, DQ[14:0]
BLOCK PROTECT	L	V_{ID}	L pulse	A9 = V_{ID} A[21:12] block addresses others = X	X
CHIP UNPROTECT	V_{ID}	V_{ID}	L pulse	A9 = V_{ID} A12 = V_{IH} A15 = V_{IH} others = X	X
BLOCK PROTECTION VERIFY	L	L	V_{IH}	A0, A2, A3 = V_{IL} A1 = V_{IH} A6 = V_{IL} A9 = V_{ID} A[21:12] block addresses others = X	Pass = XX01h Retry = XX00h
BLOCK UNPROTECT VERIFY	L	L	V_{IH}	A0, A2, A3 = V_{IL} A1 = V_{IH} A6 = V_{IH} A9 = V_{ID} A[21:12] block addresses others = X	Retry = XX01h Pass = XX00h

Notes:
1. Typical glitches of less than 5ns on CE# and WE# are ignored by the device and do not affect bus operations.
2. H = Logic level HIGH (V_{IH}); L = Logic level LOW (V_{IL}); X = HIGH or LOW.

In-System Technique

The in-system technique requires a high-voltage level on RST#. This can be achieved without violating the maximum ratings of the components on the microprocessor bus; therefore, this technique is suitable for use after the Flash has been fitted to the system.

To protect a block, follow the steps in the following figure. To unprotect the whole chip, it is necessary to protect all of the blocks first, then all the blocks can be unprotected at the same time. (See the In-System Equipment Chip Unprotect Flowchart.)

The timing on these flowcharts is critical. Care should be taken to ensure that, where a pause is specified, it is followed as closely as possible. Do not allow the microprocessor to service interrupts that will upset the timing and do not abort the procedure before reaching the end. Chip unprotect can take several seconds and a user message should be provided to show that the operation is progressing.

Micron Technology, Inc. reserves the right to change products or specifications without notice.
© 2013 Micron Technology, Inc. All rights reserved.

Figure 10: In-System Equipment Block Protect Flowchart

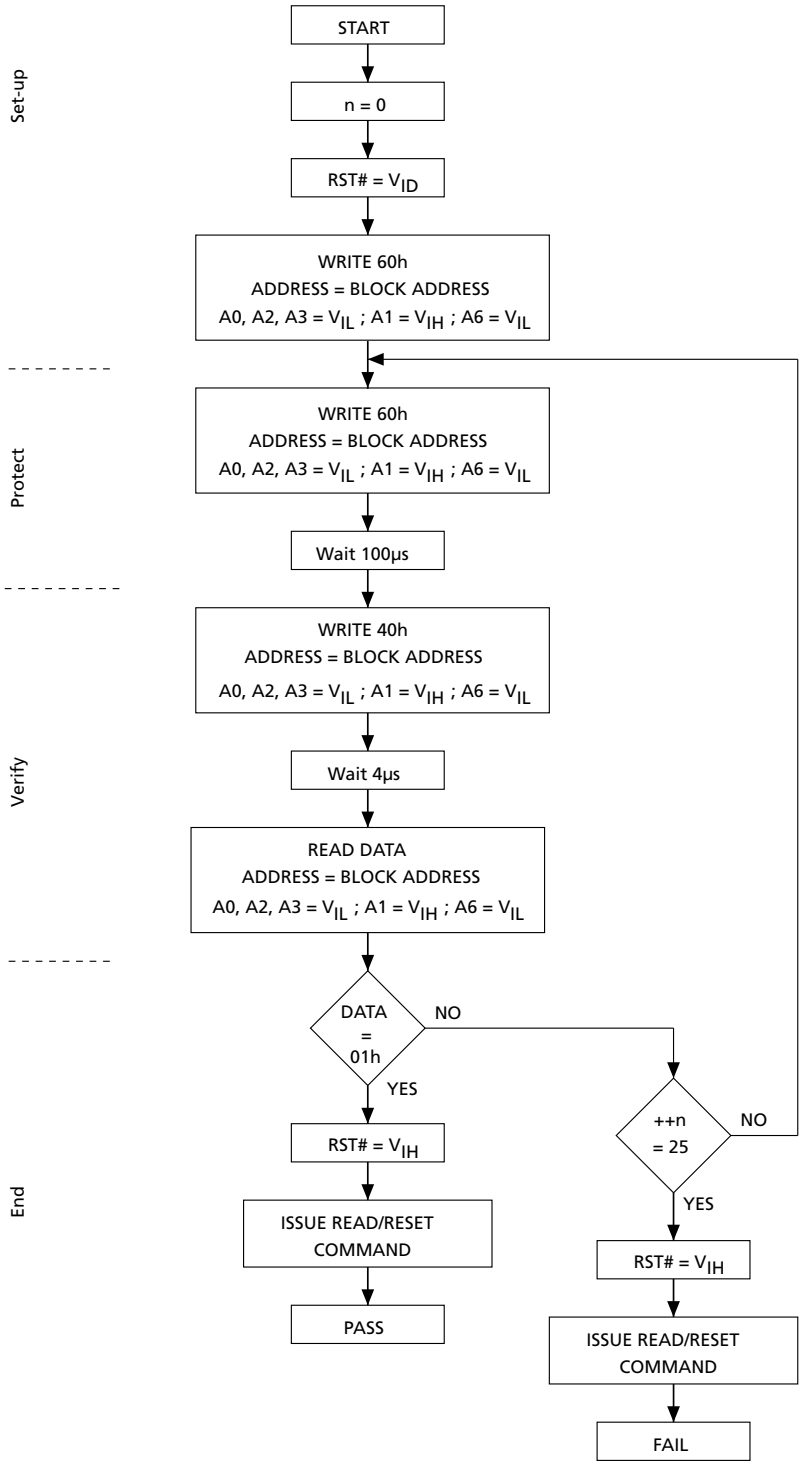

Micron Technology, Inc. reserves the right to change products or specifications without notice.
© 2013 Micron Technology, Inc. All rights reserved.

Figure 11: In-System Equipment Chip Protect Flowchart

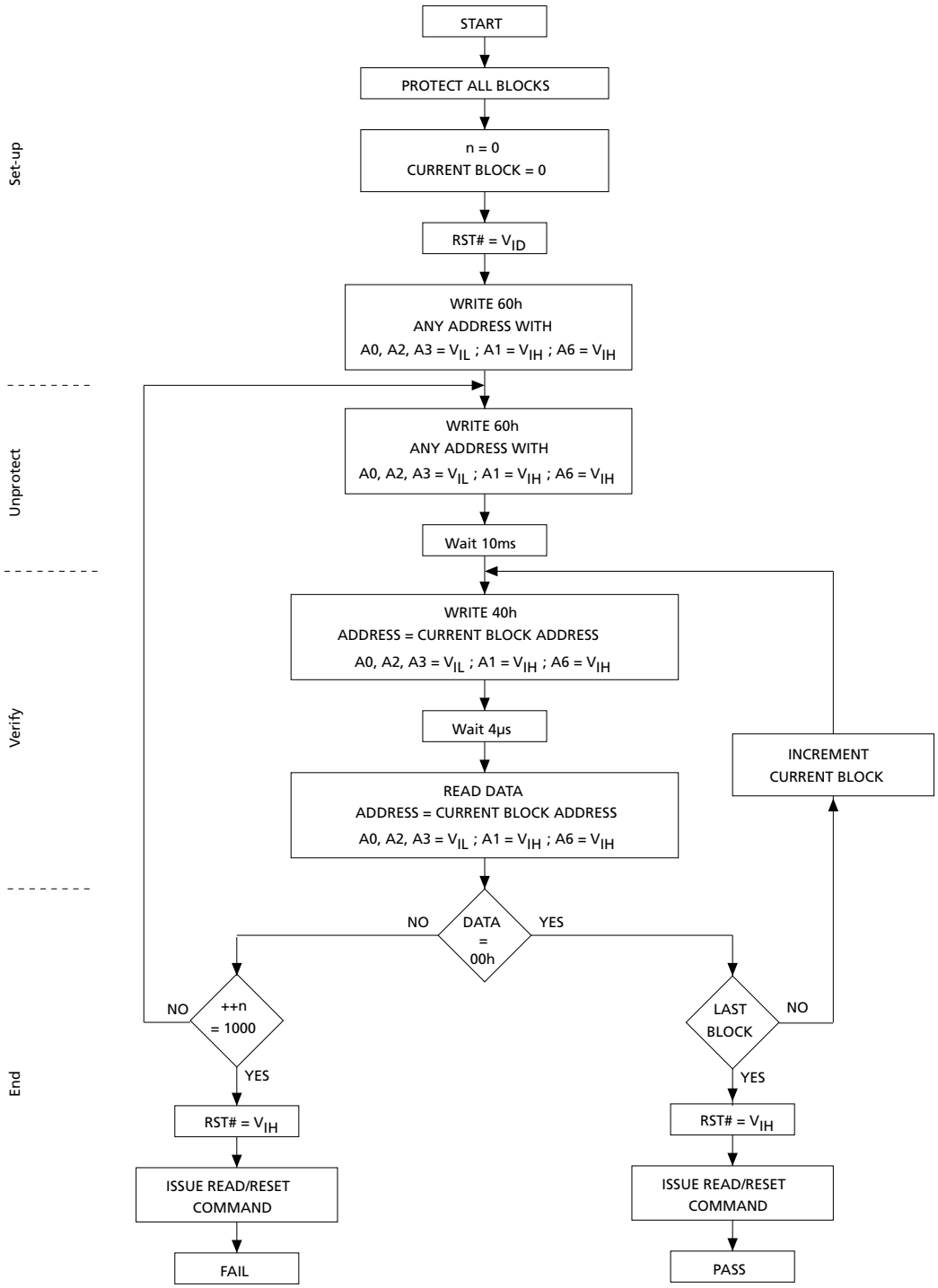

Micron Technology, Inc. reserves the right to change products or specifications without notice.
© 2013 Micron Technology, Inc. All rights reserved.

Table 15: Commands – 16-Bit Mode (BYTE# = V_{IH})

Command	Length	Bus WRITE Operations											
		1st		2nd		3rd		4th		5th		6th	
		Addr	Data	Addr	Data	Addr	Data	Addr	Data	Addr	Data	Addr	Data
READ/RESET	1	X	F0										
	3	555	AA	2AA	55	X	F0						
AUTO SELECT	3	555	AA	2AA	55	555	90						
READ CFI QUERY	1	55	98										
PROGRAM	4	555	AA	2AA	55	555	A0	PA	PD				
DOUBLE WORD PROGRAM	3	555	50	PA0	PD0	PA1	PD1						
QUADRUPLE WORD PROGRAM	5	555	56	PA0	PD0	PA1	PD1	PA2	PD2	PA3	PD3		
UNLOCK BYPASS	3	555	AA	2AA	55	555	20						
UNLOCK BYPASS PROGRAM	2	X	A0	PA	PD								
UNLOCK BYPASS RESET	2	X	90	X	00								
WRITE TO BUFFER AND PROGRAM	N + 5	555	AA	2AA	55	BA	25	BA	N #ID1-389 / note_98 C39A774 A2647E7 A884636 F7461B6 DA	PA #ID1-389 / note_0B 6F5BDF5 13B4BD5 B3607A8 8ABAC28 BF	PD	WBL #ID1-389 / note_0E4 1314B3A C04D50A C51D0FA 1046037 2	PD
WRITE TO BUFFER AND PROGRAM ABORT AND RESET	3	555	AA	2AA	55	555	F0						
WRITE TO BUFFER AND PROGRAM CONFIRM	1	BA #ID1-389 / note_565 5C246AF 734A209 3427626 3BD0616 3	29										
CHIP ERASE	6	555	AA	2AA	55	555	80	555	AA	2AA	55	555	10

Micron Technology, Inc. reserves the right to change products or specifications without notice.
© 2013 Micron Technology, Inc. All rights reserved.

Table 15: Commands – 16-Bit Mode (BYTE# = V_{IH}) (Continued)

Command	Length	Bus WRITE Operations											
		1st		2nd		3rd		4th		5th		6th	
		Addr	Data	Addr	Data	Addr	Data	Addr	Data	Addr	Data	Addr	Data
BLOCK ERASE	6+	555	AA	2AA	55	555	80	555	AA	2AA	55	BA	30
PROGRAM/ ERASE SUS-PEND	1	X	B0										
PROGRAM/ ERASE RESUME	1	X	30										
ENTER EXTEN-DED BLOCK	3	555	AA	2AA	55	555	88						
EXIT EXTEN-DED BLOCK	4	555	AA	2AA	55	555	90	X	00				

Notes:
1. X = " Don’t Care;" PA = Program address; PD = Program data; BA = Any address in the block. All values in the table are in hexadecimal. The command interface only uses A-1; A0–A10 and DQ0–DQ7 to verify the commands; A11–A20, DQ8–DQ14 and DQ15 are "Don't Care." DQ15A-1 is A-1 when BYTE# is V_{IL} or DQ15 when BYTE# is V_{IH}.
2. The maximum number of cycles in the command sequence is 36. N + 1 is the number of words to be programmed during the WRITE TO BUFFER AND PROGRAM operation.
3. Each buffer has the same A4–A22 addresses. A0–A3 are used to select a word within the N + 1 word page.
4. The 6th cycle has to be issued N time. WBL scans the word inside the page.
5. BA must be identical to the address loaded during the WRITE TO BUFFER AND PROGRAM 3rd and 4th cycles.

Micron Technology, Inc. reserves the right to change products or specifications without notice.
© 2013 Micron Technology, Inc. All rights reserved.

Table 16: Commands – 8-Bit Mode (BYTE# = V_{IL})

Command	Length	Bus WRITE Operations											
		1st		2nd		3rd		4th		5th		6th	
		Addr	Data	Addr	Data	Addr	Data	Addr	Data	Addr	Data	Addr	Data
READ/RESET	1	X	F0										
	3	AAA	AA	555	55	X	F0						
AUTO SELECT	3	AAA	AA	555	55	AAA	90						
READ CFI QUERY	1	AA	98										
PROGRAM	4	AAA	AA	555	55	AAA	A0	PA	PD				
DOUBLE BYTE PROGRAM	3	AAA	50	PA0	PD0	PA1	PD1						
QUADRUPLE BYTE PROGRAM	5	AAA	56	PA0	PD0	PA1	PD1	PA2	PD2	PA3	PD3		
OCTUPLE BYTE PROGRAM	9	AAA	8B	PA0	PD0	PA1	PD1	PA2	PD2	PA3	PD3	PA4	PD4 [2]
WRITE TO BUFFER AND PROGRAM	N + 5	AAA	AA	555	55	BA	25	BA	N [2]	PA [4]	PD	WBL [5]	PD
WRITE TO BUFFER AND PROGRAM ABORT AND RESET	3	AAA	AA	555	55	AAA	F0						
WRITE TO BUFFER AND PROGRAM CONFIRM	1	BA [6]	29										
UNLOCK BYPASS	3	AAA	AA	555	55	AAA	20						
UNLOCK BYPASS PROGRAM	2	X	A0	PA	PD								
UNLOCK BYPASS RESET	2	X	90	X	00								
CHIP ERASE	6	AAA	AA	555	55	AAA	80	AAA	AA	555	55	AAA	10
BLOCK ERASE	6+	AAA	AA	555	55	AAA	80	AAA	AA	555	55	BA	30
PROGRAM/ERASE SUSPEND	1	X	B0										
PROGRAM/ERASE RESUME	1	X	30										

Micron Technology, Inc. reserves the right to change products or specifications without notice.
© 2013 Micron Technology, Inc. All rights reserved.

Table 16: Commands – 8-Bit Mode (BYTE# = V_{IL}) (Continued)

Command	Length	Bus WRITE Operations											
		1st		2nd		3rd		4th		5th		6th	
		Addr	Data	Addr	Data	Addr	Data	Addr	Data	Addr	Data	Addr	Data
ENTER EXTENDED BLOCK	3	AAA	AA	555	55	AAA	88						
EXIT EXTENDED BLOCK	4	AAA	AA	555	55	AAA	90	X	00				

Notes:
1. X = " Don't Care;" PA = Program address; PD = Program data; BA = Any address in the block. All values in the table are in hexadecimal. The command interface only uses A-1, A0–A10, and DQ0–DQ7 to verify the commands; A11–A20, DQ8–DQ14, and DQ15 are "Don't Care." DQ15A-1 is A-1 when BYTE# is V_{IL} or DQ15 when BYTE# is V_{IH}.
2. The following is content for address: Data cycles 7 through 10: PA5–PD5, PA6–PD6, PA7–PD7, PA8–PD8.
3. The maximum number of cycles in the command sequence is 68. N + 1 is the number of words to be programmed during the WRITE TO BUFFER AND PROGRAM operation.
4. Each buffer has the same A4–A22 addresses. A0–A3 and DQ15A-1 are used to select a word within the N + 1 word page.
5. The 6th cycle has to be issued N time. WBL scans the word inside the page.
6. BA must be identical to the address loaded during the WRITE TO BUFFER AND PROGRAM 3rd and 4th cycles.

Micron Technology, Inc. reserves the right to change products or specifications without notice.
© 2013 Micron Technology, Inc. All rights reserved.

Common Flash Interface

The common Flash interface (CFI) is a JEDEC-approved, standardized data structure that can be read from the Flash memory device. It allows a system's software to query the device to determine various electrical and timing parameters, density information, and functions supported by the memory. The system can interface easily with the device, enabling the software to upgrade itself when necessary.

When the READ CFI command is issued, the device enters CFI query mode and the data structure is read from memory. The following tables show the addresses (A-1, A[7:0]) used to retrieve the data. The query data is always presented on the lowest order data outputs (DQ[7:0]), and the other data outputs (DQ[15:8]) are set to 0.

Table 17: Query Structure Overview

Note 1 applies to the entire table

Address			
x16	x8	Subsection Name	Description
10h	20h	CFI query identification string	Command set ID and algorithm data offset
1Bh	36h	System interface information	Device timing and voltage information
27h	4Eh	Device geometry definition	Flash device layout
40h	80h	Primary algorithm-specific extended query table	Additional information specific to the primary algorithm (optional)
61h	C2h	Security code area	64-bit unique device number

Note: 1. Query data are always presented on the lowest order data outputs (DQ[7:0]). DQ[15:8] are set to 0.

Table 18: CFI Query Identification String

Note 1 applies to the entire table

Address				
x16	x8	Data	Description	Value
10h	20h	0051h	Query unique ASCII string "QRY"	"Q"
11h	22h	0052h		"R"
12h	24h	0059h		"Y"
13h 14h	26h 28h	0002h 0000h	Primary algorithm command set and control interface ID code 16-bit ID code defining a specific algorithm	AMD compatible
15h 16h	2Ah 2Ch	0040h 0000h	Address for primary algorithm extended query table (see the Primary Algorithm-Specific Extended Query Table)	P = 40h
17h 18h	2Eh 30h	0000h 0000h	Alternate vendor command set and control interface ID code second vendor-specified algorithm supported	–
19h 1Ah	32h 34h	0000h 0000h	Address for alternate algorithm extended query table	–

Note: 1. Query data are always presented on the lowest order data outputs (DQ[7:0]). DQ[15:8] are set to 0.

Micron Technology, Inc. reserves the right to change products or specifications without notice.
© 2013 Micron Technology, Inc. All rights reserved.

Table 19: CFI Query System Interface Information

Note 1 applies to the entire table

Address		Data	Description	Value
x16	x8			
1Bh	36h	0027h	V_{CC} logic supply minimum program/erase voltage Bits[7:4] BCD value in volts Bits[3:0] BCD value in 100mV	2.7V
1Ch	38h	0036h	V_{CC} logic supply maximum program/erase voltage Bits[7:4] BCD value in volts Bits[3:0] BCD value in 100mV	3.6V
1Dh	3Ah	00B5h	V_{PPH} (programming) supply minimum program/erase voltage Bits[7:4] hex value in volts Bits[3:0] BCD value in 100mV	11.5V
1Eh	3Ch	00C5h	V_{PPH} (programming) supply maximum program/erase voltage Bits[7:4] hex value in volts Bits[3:0] BCD value in 100mV	12.5V
1Fh	3Eh	0004h	Typical timeout for single byte/word program = 2^nµs	16µs
20h	40h	0004h	Typical timeout for maximum size buffer program = 2^nµs	16µs
21h	42h	000Ah	Typical timeout per individual block erase = 2^nms	1s
22h	44h	0000h	Typical timeout for full chip erase = 2^nms	–
23h	46h	0004h	Maximum timeout for byte/word program = 2^n times typical	256µs
24h	48h	0004h	Maximum timeout for buffer program = 2^n times typical	200µs
25h	4Ah	0003h	Maximum timeout per individual block erase = 2^n times typical	8s
26h	4Ch	0000h	Maximum timeout for chip erase = 2^n times typical	–

Note: 1. The values in this table are valid for both packages.

Table 20: Device Geometry Definition

Address		Data	Description	Value
x16	x8			
27h	4Eh	0017h	Device size = 2^n in number of bytes	8MB
28h 29h	50h 52h	0002h 0000h	Flash device interface code description	x8, x16 asynchronous
2Ah 2Bh	54h 56h	0005h 0000h	Maximum number of bytes in multi-byte program or page = 2^n	32
2Ch	58h	0001h	Number of erase block regions. It specifies the number of regions containing contiguous erase blocks of the same size. M29W640GH and M29W640GL devices only	1
		0002h	Number of erase block regions. It specifies the number of regions containing contiguous erase blocks of the same size. M29W640GT and M29W640GB devices only	2
2Dh 2Eh	5Ah 5Ch	0007h 0000h	Region 1 information Number of identical-size erase blocks = 007Fh + 1 M29W640GH and M29W640GL devices only	128

Micron Technology, Inc. reserves the right to change products or specifications without notice.
© 2013 Micron Technology, Inc. All rights reserved.

Table 20: Device Geometry Definition (Continued)

Address		Data	Description	Value
x16	x8			
2Fh 30h	5Eh 60h	0000h 0000h	Region 1 information Block size in region 1 = 0100h × 256 bytes M29W640GH and M29W640GL devices only	64KB
2Dh 2Eh	5Ah 5Ch	0007h 0000h	Region 1 information Number of identical-size erase blocks = 0007h + 1 M29W640GT and M29W640GB devices only	8
2Fh 30h	5Eh 60h	0020h 0000h	Region 1 information Block size in region 1 = 0200h × 256 bytes M29W640GT and M29W640GB devices only	8KB
31h 32h	62h 64h	007Eh 0000h	Region 2 information Number of identical-size erase blocks = 007Eh + 1 M29W640GT and M29W640GB devices only	127
33h 34h	66h 68h	0000h 0001h	Region 2 information Block size in region 2 = 0100h × 256 bytes M29W640GT and M29W640GB devices only	64KB
35h 36h 37h 38h	6Ah 6Ch 6Eh 70h	0000h 0000h 0000h 0000h	Region 3 information Number of identical-size erase blocks = 0000h + 1 Region 3 information Block size in region 3 = 0000h × 256 bytes M29W640GT and M29W640GB devices only	0
39h 3Ah 3Bh 3Ch	72h 74h 76h 78h	0000h 0000h 0000h 0000h	Region 4 information Number of identical-size erase blocks = 0000h + 1 Region 4 information Block size in region 4 = 0000h × 256 bytes M29W640GT and M29W640GB devices only	0

Note: 1. For bottom boot devices, erase block region 1 is located from address 000000h to 007FFFh and erase block region 2 from address 008000h to 3FFFFFh. For top boot devices, erase block region 1 is located from address 000000h to 3F7FFFh and erase block region 2 from address 3F8000h to 3FFFFFh.

Table 21: Primary Algorithm-Specific Extended Query Table

Note 1 applies to the entire table

Address		Data	Description	Value
x16	x8			
40h	80h	0050h	Primary algorithm extended query table unique ASCII string “PRI”	"P"
41h	82h	0052h		"R"
42h	84h	0049h		"I"
43h	86h	0031h	Major version number, ASCII	"1"
44h	88h	0033h	Minor version number, ASCII	"3"

Micron Technology, Inc. reserves the right to change products or specifications without notice.
© 2013 Micron Technology, Inc. All rights reserved.

Table 21: Primary Algorithm-Specific Extended Query Table (Continued)

Note 1 applies to the entire table

Address		Data	Description	Value
x16	x8			
45h	8Ah	0000h	Address sensitive unlock (bits[1:0]): 00 = Required 01 = Not required Silicon revision number (bits[7:2])	00
46h	8Ch	0002h	Erase suspend: 00 = Not supported 01 = Read only 02 = Read and write	2
47h	8Eh	0004h	Block protection: 00 = Not supported x = Number of blocks per group	4
48h	90h	0001h	Temporary block unprotect: 00 = Not supported 01 = Supported	01
49h	92h	0004h	Block protect/unprotect	04
4Ah	94h	0000h	Simultaneous operations: Not supported	–
4Bh	96h	0000h	Burst mode: 00 = Not supported 01 = Supported	00
4Ch	98h	0001h	Page mode: 00 = Not supported 01 = 4-word page; 02 = 8-word page	01
4Dh	9Ah	00B5h	V_{PPH} supply minimum program/erase voltage: Bits[7:4] hex value in volts Bits[3:0] BCD value in 100mV	11.5V
4Eh	9Ch	00C5h	V_{PPH} supply maximum program/erase voltage: Bits[7:4] hex value in volts Bits[3:0] BCD value in 100mV	12.5V
4Fh	9Eh	00xxh	Top/bottom boot block flag: xx = 02h: M29W640GB bottom boot device xx = 03h M29W640GT top boot device xx = 04h M29W640GL first block protected by V_{PP}/WP# xx = 05h: M29W640GH, last block protected by V_{PP}/WP#	Uniform + V_{PP}/WP# protecting highest or lowest block
50h	A0h	0001h	Program suspend: 00 = Not supported 01 = Supported	01

Note: 1. The values in this table are valid for both packages.

Micron Technology, Inc. reserves the right to change products or specifications without notice.
© 2013 Micron Technology, Inc. All rights reserved.

Table 22: Security Code Area

Address		Data	Description
x16	x8		
61h	C3h, C2h	XXXX	64-bit unique device number
62h	C5h, C4h	XXXX	
63h	C7h, C6h	XXXX	
64h	C9h, C8h	XXXX	

Micron Technology, Inc. reserves the right to change products or specifications without notice.
© 2013 Micron Technology, Inc. All rights reserved.

Absolute Ratings and Operating Conditions

Stresses greater than those listed may cause permanent damage to the device. This is a stress rating only, and functional operation of the device at these or any other conditions outside those indicated in the operational sections of this specification is not implied. Exposure to absolute maximum rating conditions for extended periods may adversely affect reliability.

Table 23: Absolute Maximum/Minimum Ratings

Parameter	Symbol	Min	Max	Unit	Notes
Temperature under bias	T_{BIAS}	–50	125	°C	
Storage temperature	T_{STG}	–65	150	°C	
Input/output voltage	V_{IO}	–0.6	V_{CC} + 0.6	V	1, 2
Supply voltage	V_{CC}	–0.6	4	V	
Program voltage	V_{PP}	–0.6	13.5	V	3
Identification voltage	V_{ID}	–0.6	13.5	V	

Notes:
1. During signal transitions, minimum voltage may undershoot to –2V for periods less than 20ns.
2. During signal transitions, maximum voltage may overshoot to V_{CC} + 2V for periods less than 20ns.
3. V_{PP} must not remain at 12V for more than a total of 80 hours.

Table 24: Operating Conditions

Parameter	Symbol	M29W640GT/B and M29W640GH/L		Unit	Notes
		Min	Max		
Supply voltage	V_{CC}	2.7	3.6	V	
Ambient operating temperature	T_A	-40	85/125	°C	1
Load capacitance	C_L	30		pF	
Input rise and fall times	–	–	10	ns	
Input pulse voltages	–	0 to V_{CC}		V	
Input and output timing reference voltages	–	$V_{CC}/2$		V	

Note: 1. 85°C = industrial part; 125°C = autograde part.

Micron Technology, Inc. reserves the right to change products or specifications without notice.
© 2013 Micron Technology, Inc. All rights reserved.

Figure 12: AC Measurement Load Circuit

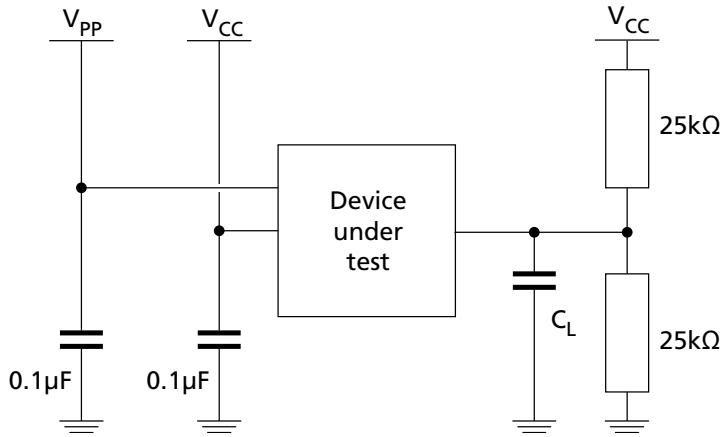

Note: 1. C_L includes jig capacitance.

Figure 13: AC Measurement I/O Waveform

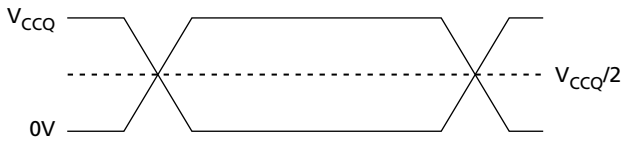

Table 25: Input/Output Capacitance

Parameter	Symbol	Test Condition	Min	Max	Unit
Input capacitance	C_{IN}	V_{IN} = 0V	–	6	pF
Output capacitance	C_{OUT}	V_{OUT} = 0V	–	12	pF

Note: 1. Sampled only, not 100% tested.

Micron Technology, Inc. reserves the right to change products or specifications without notice.
© 2013 Micron Technology, Inc. All rights reserved.

DC Characteristics

Table 26: DC Current Characteristics

Parameter	Symbol	Conditions	Typ	Max	Unit	Notes
Input leakage current	I_{LI}	$0V \le V_{IN} \le V_{CC}$	–	±1	µA	1
Output leakage current	I_{LO}	$0V \le V_{OUT} \le V_{CC}$	–	±1	µA	
Read current	I_{CC1}	CE# = V_{IL}, OE# = V_{IH}, *f* = 6 MHz		10	mA	
Standby current	I_{CC2}	CE# = V_{CC} ±0.2V RST# = V_{CC} ±0.2V		100	µA	2
Program/Erase current	I_{CC3}	Program/Erase controller active: V_{PP}/WP# = V_{IL} or V_{IH}; V_{PP}/WP# = V_{PP}	–	20	mA	3
Current for V_{PP}/WP# program acceleration	I_{PP}	V_{CC} = 2.7V ±10%	–	15	mA	

Notes:
1. The maximum input leakage current is ±5uA on V_{PP}/WP#.
2. When the bus is inactive for 300ns or more, the memory enters automatic standby.
3. Sampled only; not 100% tested.

Table 27: DC Voltage Characteristics

Parameter	Symbol	Conditions	Min	Max	Unit	Notes
Input LOW voltage	V_{IL}	–	–0.5	0.8	V	
Input HIGH voltage	V_{IH}	–	0.7 V_{CC}	V_{CC} + 0.3	V	
Voltage for V_{PP}/WP# program acceleration	V_{PP}	V_{CC} = 2.7V ±10%	11.5	12.5	V	
Output LOW voltage	V_{OL}	I_{OL} = 1.8mA	–	0.45	V	
Output HIGH voltage	V_{OH}	I_{OH} = –100µA	V_{CC} – 0.4	–	V	
Identification voltage	V_{ID}	–	11.5	12.5	V	
Program/erase lockout supply voltage	V_{LKO}	–	1.8	2.3	V	1

Note:
1. Sampled only; not 100% tested.

Micron Technology, Inc. reserves the right to change products or specifications without notice.
© 2013 Micron Technology, Inc. All rights reserved.

Read AC Characteristics

Table 28: Read AC Characteristics

Parameter	Symbol		Condition	Min/Max	60ns	70ns	90ns	Unit	Notes
	Legacy	JEDEC							
Address valid to next address valid	^{t}RC	^{t}AVAV	CE# = V_{IL}, OE# = V_{IL}	Min	60	70	90	ns	
Address valid to output valid	^{t}ACC	^{t}AVQV	CE# = V_{IL}, OE# = V_{IL}	Max	60	70	90	ns	
Address valid to output valid (page)	^{t}PAGE	^{t}AVQV1	CE# = V_{IL}, OE# = V_{IL}	Max	25	30	30	ns	
CE# LOW to output transition	^{t}LZ	^{t}ELQX	OE# = V_{IL}	Min	0	0	0	ns	1
CE# LOW to output valid	^{t}CE	^{t}ELQV	OE# = V_{IL}	Max	60	70	90	ns	
OE# LOW to output transition	^{t}OLZ	^{t}GLQX	CE# = V_{IL}	Min	0	0	0	ns	1
OE# LOW to output valid	^{t}OE	^{t}GLQV	CE# = V_{IL}	Max	25	30	30	ns	
CE# HIGH to output High-Z	^{t}HZ	^{t}EHQZ	OE# = V_{IL}	Max	25	30	30	ns	1
OE# HIGH to output High-Z	^{t}DF	^{t}GHQZ	CE# = V_{IL}	Max	25	30	30	ns	1
CE#, OE#, or address transition to output transition	^{t}OH	^{t}EHQX, ^{t}GHQX, ^{t}AXQX	–	Min	0	0	0	ns	
CE# to BYTE# LOW	^{t}ELFL	^{t}ELBL	–	Max	5	5	5	ns	
CE# to BYTE# HIGH	^{t}ELFH	^{t}ELBH	–	Max	5	5	5	ns	
BYTE# LOW to output High-Z	^{t}FLQZ	^{t}BLQZ	–	Max	25	25	25	ns	
BYTE# HIGH to output valid	^{t}FHQV	^{t}BHQV	–	Max	25	30	30	ns	

Note: 1. Sampled only; not 100% tested.

Micron Technology, Inc. reserves the right to change products or specifications without notice.
© 2013 Micron Technology, Inc. All rights reserved.

Figure 14: Random AC Timing

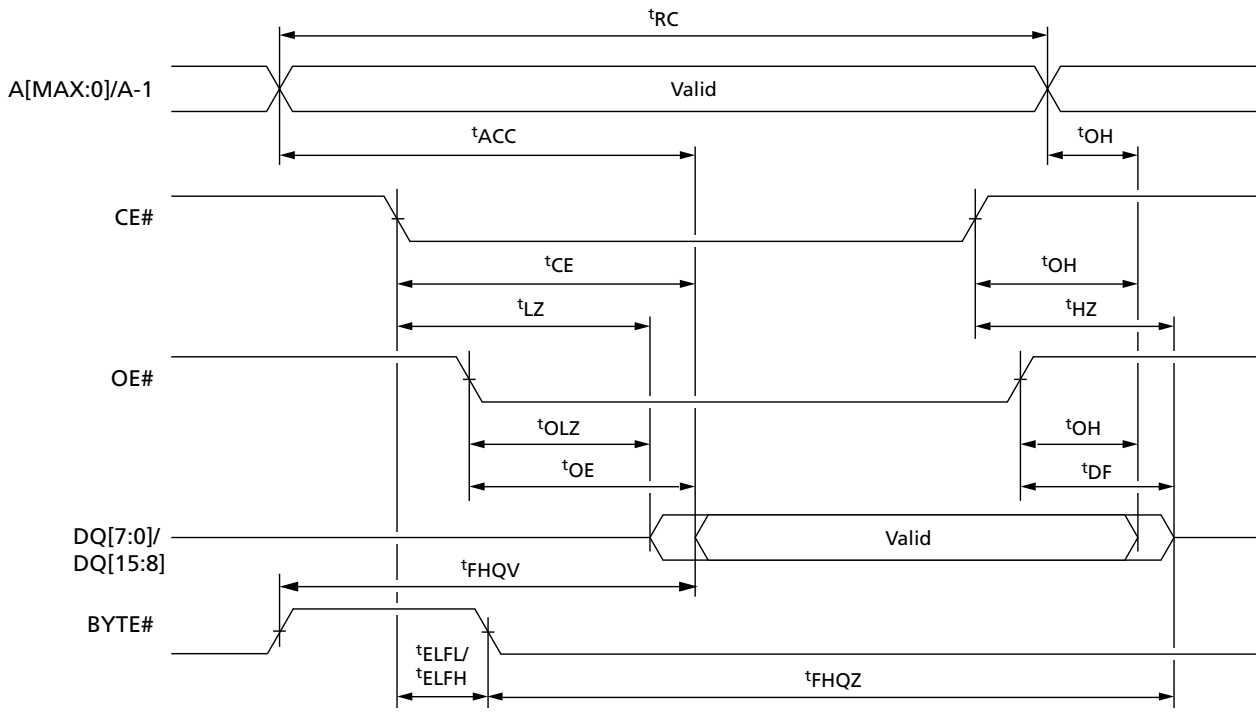

Notes:
1. Data are output on DQ0-DQ15. DQ8-DQ14 are High-Z in 8-bit mode.
2. Addresses differ in x8 mode.
3. BYTE# = V_{IL} in x8 mode.

Micron Technology, Inc. reserves the right to change products or specifications without notice.
© 2013 Micron Technology, Inc. All rights reserved.

Figure 15: Page Read AC Timing

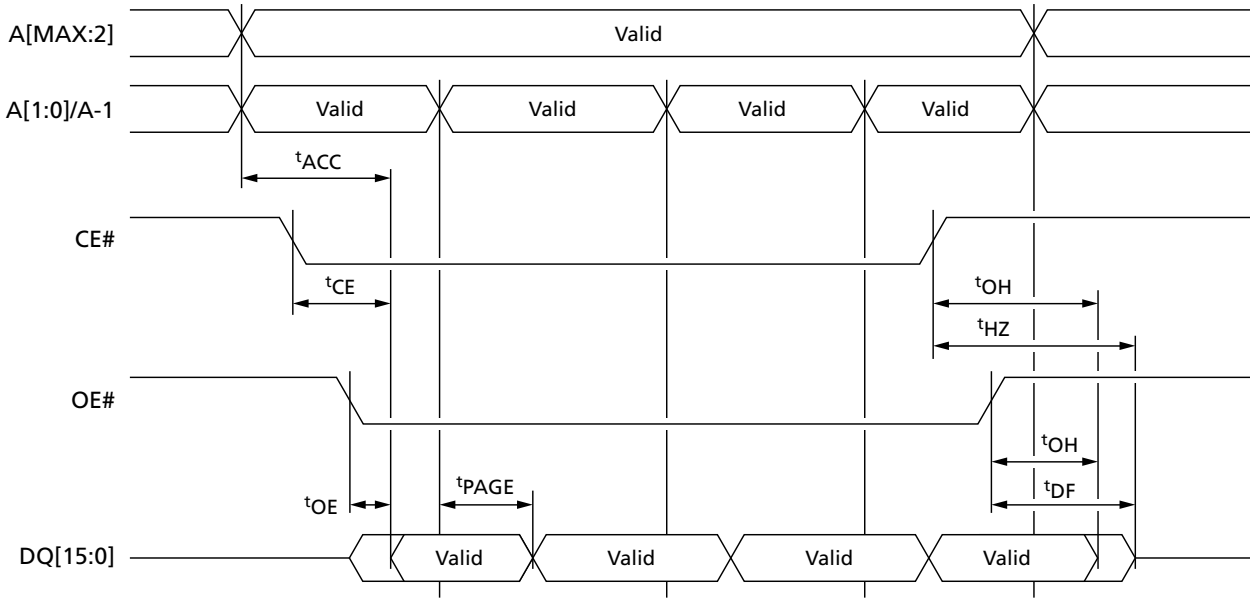

Notes: 1. Data are output on DQ0-DQ15. DQ8-DQ14 are High-Z in 8-bit mode.
2. Addresses differ in x8 mode.

Micron Technology, Inc. reserves the right to change products or specifications without notice.
© 2013 Micron Technology, Inc. All rights reserved.

Write AC Characteristics

Table 29: WE#-Controlled Write AC Characteristics

Parameter	Symbol		Min/Max	60ns	70ns	90ns	Unit	Notes
	Legacy	JEDEC						
Address valid to next address valid	^{t}WC	^{t}AVAV	Min	60	70	90	ns	
CE# LOW to WE# LOW	^{t}CS	^{t}ELWL	Min	0	0	0	ns	
WE# LOW to WE# HIGH	^{t}WP	^{t}WLWH	Min	35	35	35	ns	
Input valid to WE# HIGH	^{t}DS	^{t}DVWH	Min	30	30	30	ns	
WE# HIGH to input transition	^{t}DH	^{t}WHDX	Min	0	0	0	ns	
WE# HIGH to CE# HIGH	^{t}CH	^{t}WHEH	Min	0	0	0	ns	
WE# HIGH to WE# LOW	^{t}WPH	^{t}WHWL	Min	25	25	25	ns	
Address valid to WE# LOW	^{t}AS	^{t}AVWL	Min	0	0	0	ns	
WE# LOW to address transition	^{t}AH	^{t}WLAX	Min	45	45	45	ns	
OE# HIGH to WE# LOW	–	^{t}GHWL	Min	0	0	0	ns	
WE# HIGH to OE# LOW	^{t}OEH	^{t}WHGL1	Min	0	0	0	ns	
Program/erase valid to RY/BY# LOW	^{t}BUSY	^{t}WHRL1	Max	0	0	0	ns	1
V_{CC} HIGH to CE# LOW	^{t}VCS	^{t}VCHEL	Min	50	50	50	µs	

Note: 1. Sampled only; not 100% tested.

Micron Technology, Inc. reserves the right to change products or specifications without notice.
© 2013 Micron Technology, Inc. All rights reserved.

Figure 16: WE#-Controlled AC Timing

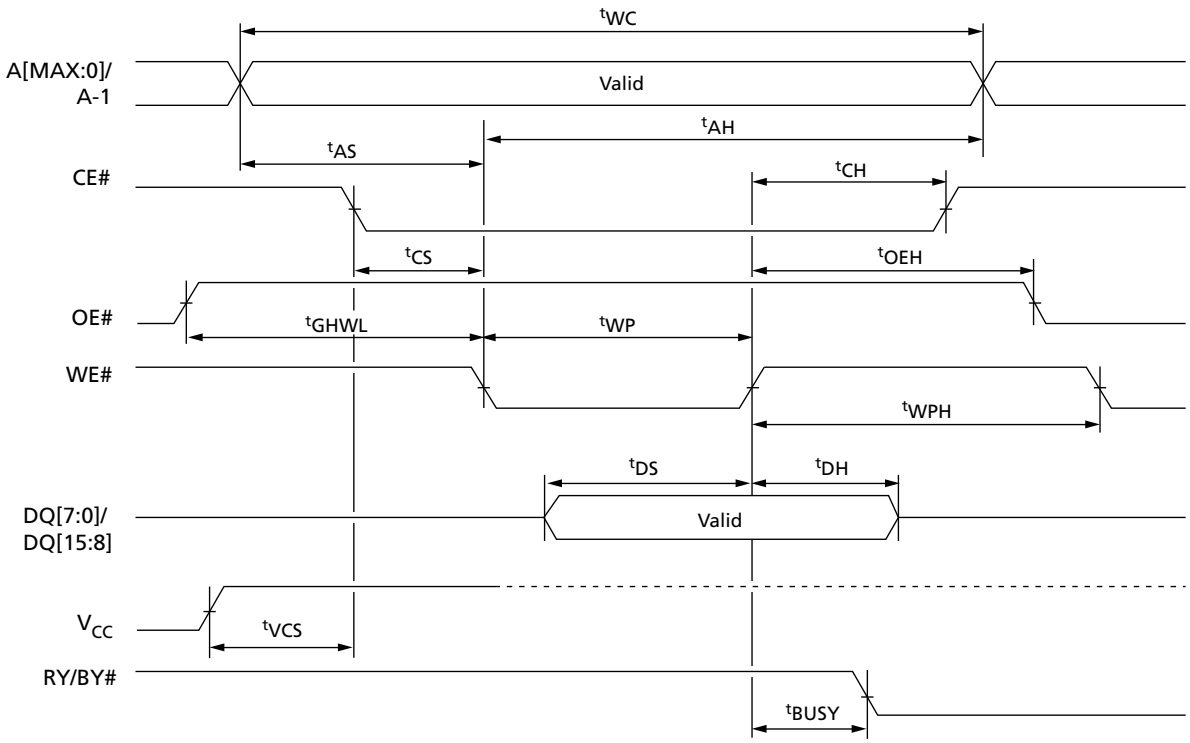

Note: 1. Addresses differ in x8 mode.

Micron Technology, Inc. reserves the right to change products or specifications without notice.
© 2013 Micron Technology, Inc. All rights reserved.

Table 30: CE#-Controlled Write AC Characteristics

Parameter	Symbol		Min/Max	60ns	70ns	90ns	Unit	Notes
	Legacy	JEDEC						
Address valid to next address valid	^{t}WC	^{t}AVAV	Min	60	70	90	ns	
WE# LOW to CE# LOW	^{t}WS	^{t}WLEL	Min	0	0	0	ns	
CE# LOW to CE# HIGH	^{t}CP	^{t}ELEH	Min	35	35	35	ns	
Input valid to CE# HIGH	^{t}DS	^{t}DVEH	Min	30	30	30	ns	
CE# HIGH to input transition	^{t}DH	^{t}EHDX	Min	0	0	0	ns	
CE# HIGH to WE# HIGH	^{t}WH	^{t}EHWH	Min	0	0	0	ns	
CE# HIGH to CE# LOW	^{t}CPH	^{t}EHEL1	Min	25	25	25	ns	
Address valid to CE# LOW	^{t}AS	^{t}AVEL	Min	0	0	0	ns	
CE# LOW to address transition	^{t}AH	^{t}ELAX	Min	45	45	45	ns	
OE# HIGH to CE# LOW	–	^{t}GHEL	Min	0	0	0	ns	
CE# HIGH to OE# LOW	^{t}OEH	^{t}EHGL1	Min	0	0	0	ns	
Program/Erase valid to RY/BY# LOW	^{t}BUSY	^{t}EHRL	Max	0	0	0	ns	1
V_{CC} HIGH to WE# LOW	^{t}VCS	^{t}VCHWL	Min	50	50	50	ns	

Note: 1. Sampled only; not 100% tested.

Micron Technology, Inc. reserves the right to change products or specifications without notice.
© 2013 Micron Technology, Inc. All rights reserved.

Figure 17: CE#-Controlled AC Timing

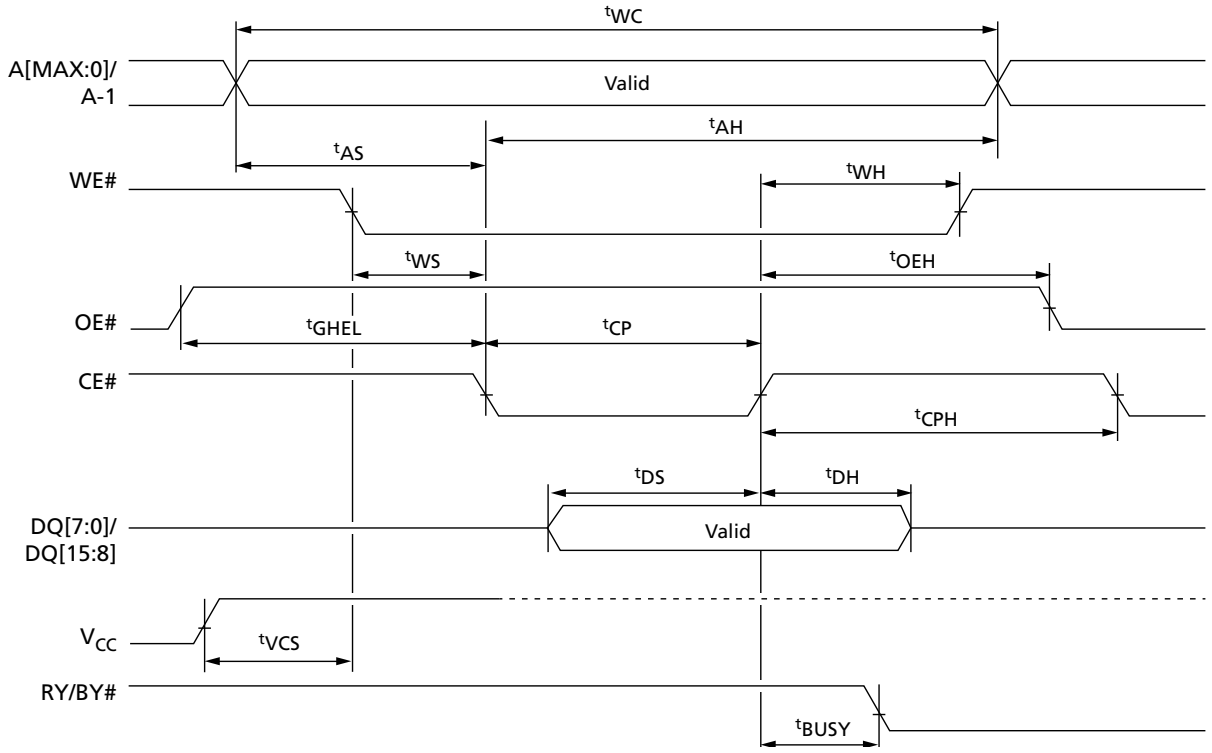

Note: 1. Addresses differ in x8 mode.

Micron Technology, Inc. reserves the right to change products or specifications without notice.
© 2013 Micron Technology, Inc. All rights reserved.

Toggle and Alternative Toggle AC Characteristics

Table 31: Toggle and Alternative Toggle AC Characteristics

Parameter	Symbol		Min/Max	60ns	70ns	90ns	Unit
	Legacy	JEDEC					
Address setup time to OE# LOW during toggle bit polling	^{t}ASO	^{t}AXGL	Min	10	10	10	ns
Address hold time from OE# during toggle bit polling	^{t}AHT	^{t}GHAX	Min	10	10	10	ns
		^{t}EHAX	Min	10	10	10	ns
CE# HIGH during toggle bit polling	^{t}CEPH	^{t}EHEL2	Min	10	10	10	ns
Output hold time during data and toggle bit polling	^{t}OEH	^{t}WHGL2	Min	20	20	20	ns
		^{t}GHGL2	Min	20	20	20	ns

Note: 1. Data for ^{t}ELQV and ^{t}GLQV are in the Read AC Characteristics table.

Figure 18: Toggle/Alternative Toggle, CE# Controlled

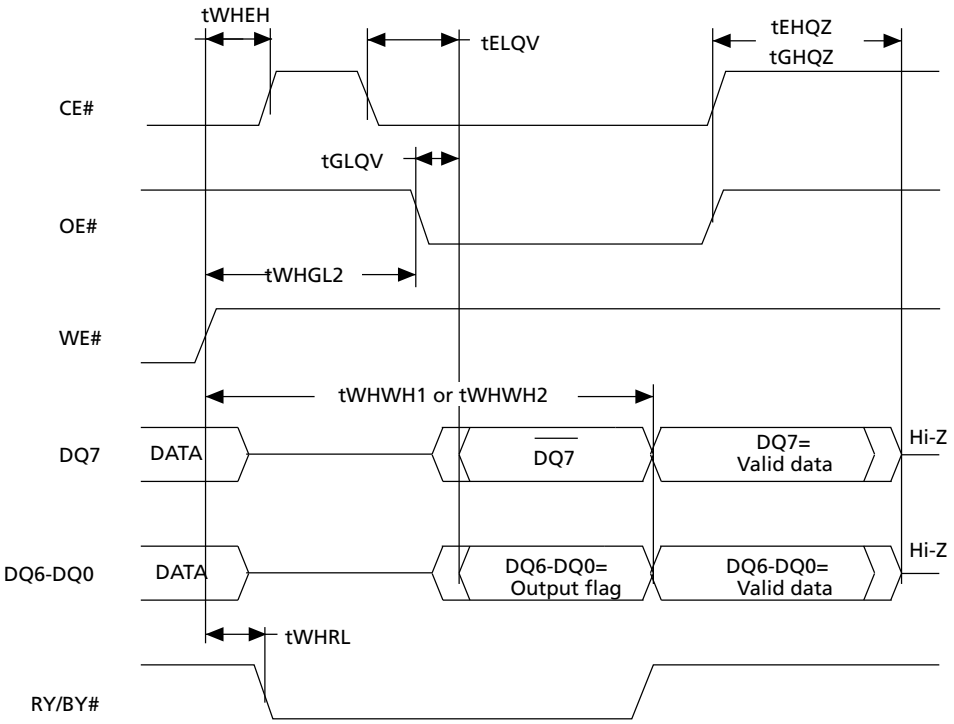

Notes: 1. DQ7 returns valid data bit when the ongoing PROGRAM or ERASE command is completed.
2. See the AC Characteristics for specifications.

Micron Technology, Inc. reserves the right to change products or specifications without notice.
© 2013 Micron Technology, Inc. All rights reserved.

Figure 19: Toggle/Alternative Toggle, OE# Controlled

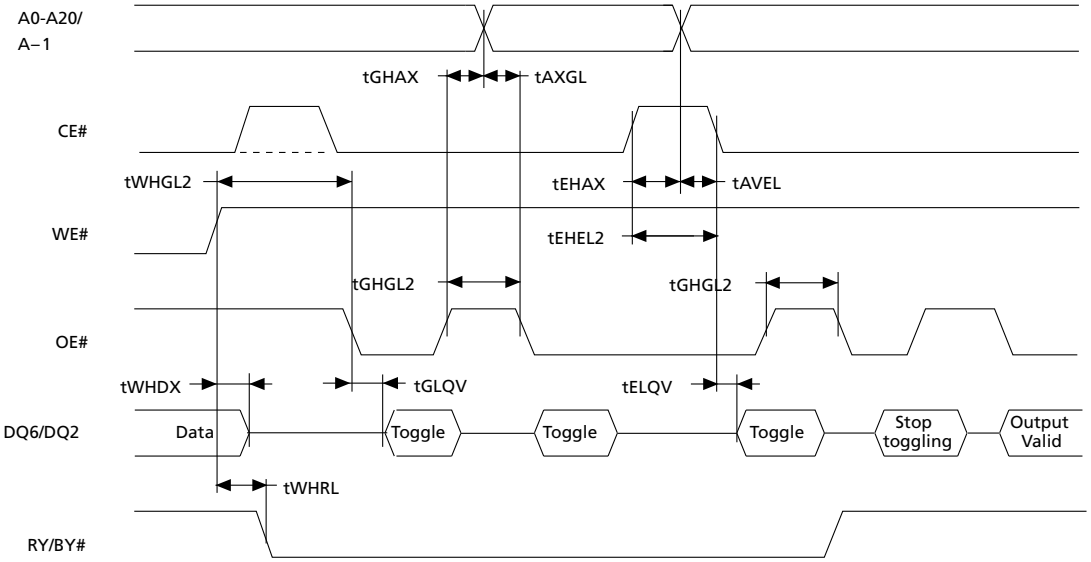

Notes:
1. DQ6 stops toggling when the ongoing PROGRAM or ERASE command is completed. DQ2 stops toggling when the ongoing CHIP ERASE or BLOCK ERASE command is completed.
2. Addresses differ in x8 mode.
3. See the AC Characteristics for specifications.

Micron Technology, Inc. reserves the right to change products or specifications without notice.
© 2013 Micron Technology, Inc. All rights reserved.

Program/Erase Characteristics

Table 32: Program/Erase Times and Endurance Cycles

Notes 1 and 2 apply to the entire table

Parameter	Symbol	Min	Typ	Max	Unit	Notes
Chip erase		–	80	400	s	3
Block erase (64KB)	^{t}WHWH2	–	0.5	–	s	4, 5
Erase suspend latency time		–	–	50	µs	6
Program (byte or word)		–	10	200	µs	3
Program (double byte)			10	200	µs	3
Program (double word/quadruple byte)			10	200	µs	3
Program (quadruple word/octuple byte)			10	200	µs	3
Program (single byte and word)	^{t}WHWH1	–	10		µs	3, 7
Program (32-byte 16-word using Write to Buffer and Program)			180		µs	
Program (32-byte 16-word using Write to Buffer and Program, V_{PP}/WP# = 12V)			45		µs	
Chip program (byte by byte)		–	80	400	s	3
Chip program (word by word)			40	200	s	3
Chip program (double word/quadruple byte)			20	100	s	3
Chip program (quadruple word/octuple byte)		–	10	50	s	3
Program suspend latency time		–	–	4	µs	
PROGRAM/ERASE cycles (per block)		100,000	–	–	cycles	
Data retention		20	–	–	years	

Notes:
1. Typical values measured at room temperature and nominal voltages and for not cycled devices.
2. Sampled, but not 100% tested.
3. Maximum value measured at worst case conditions for both temperature and V_{CC} after 100,000 PROGRAM/ERASE cycles.
4. Time does not include pre-programming time.
5. Block erase polling cycle time.
6. Maximum value measured at worst case conditions for both temperature and V_{CC}.
7. Programming polling cycle time.

Micron Technology, Inc. reserves the right to change products or specifications without notice.
© 2013 Micron Technology, Inc. All rights reserved.

Figure 20: WE# Controlled Program Waveform

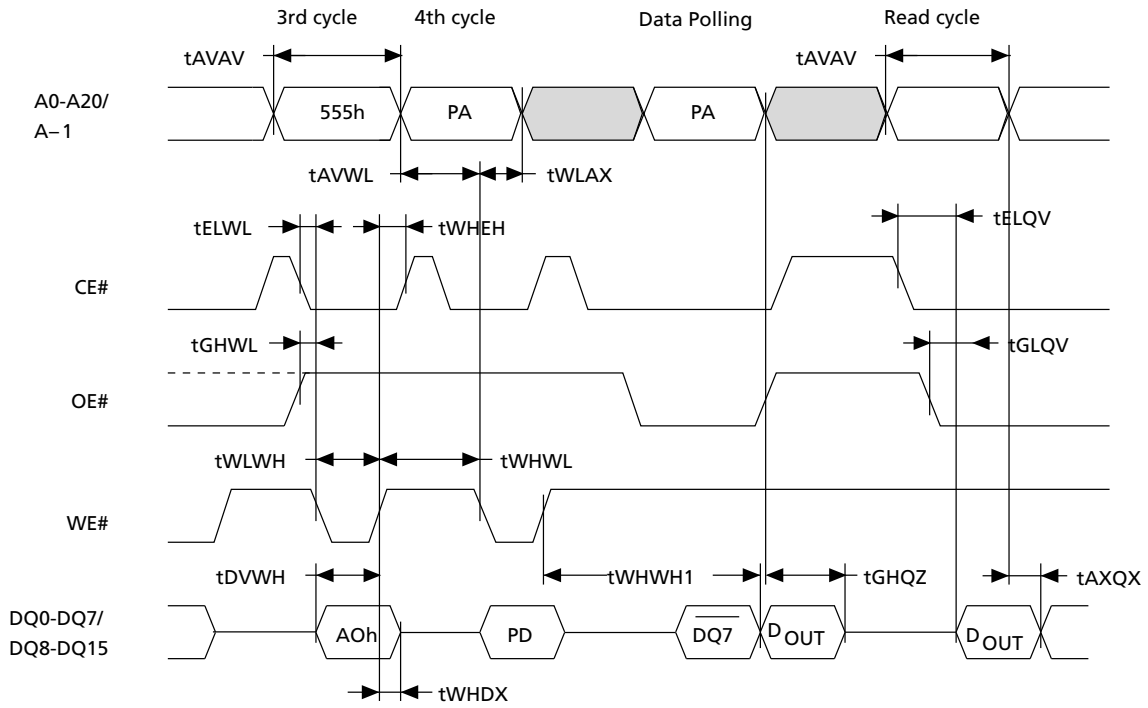

Notes:
1. Only the third and fourth cycles of the Program command are represented. The Program command is followed by the check of status register data polling bit and by a read operation that outputs the data, DOUT, programmed by the previous Program command.
2. PA is address of the memory location to be programmed. PD is the data to be programmed.
3. DQ7# is the complement of the data bit being programmed to DQ7.
4. Addresses differ in x8 mode.

Micron Technology, Inc. reserves the right to change products or specifications without notice.
© 2013 Micron Technology, Inc. All rights reserved.

Figure 21: CE# Controlled Program Waveform

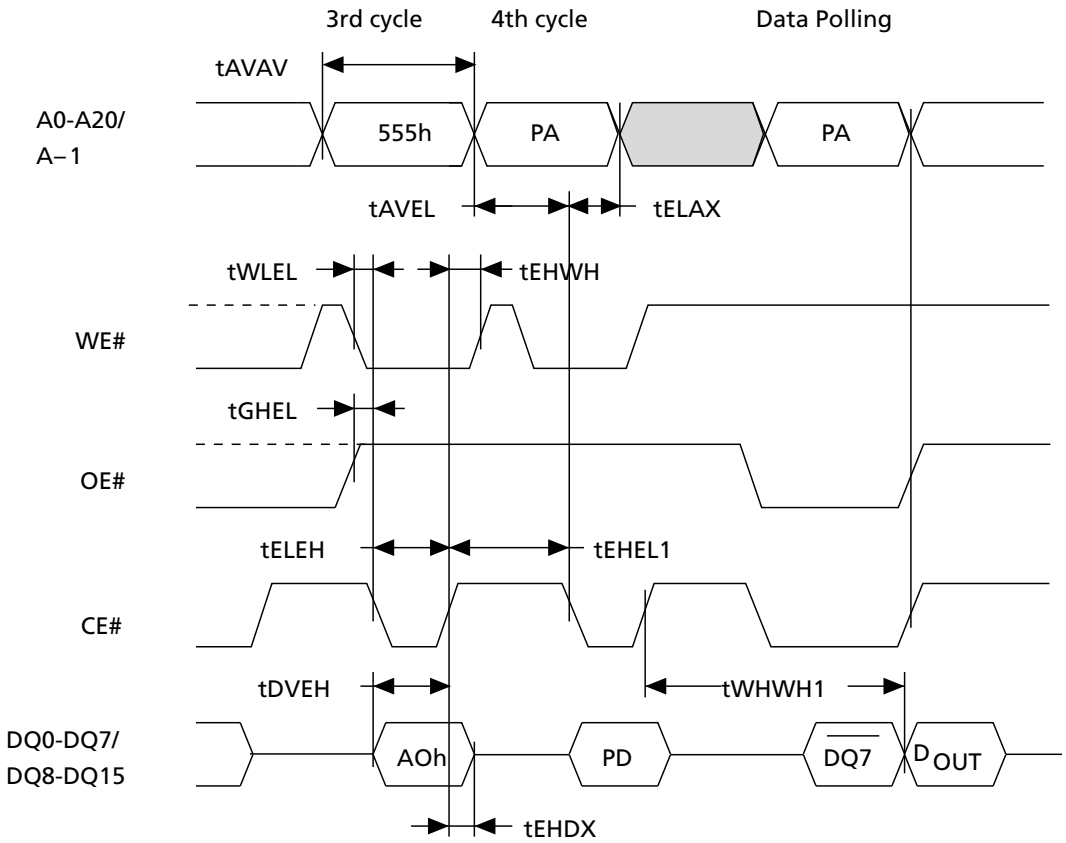

Notes:
1. Only the third and fourth cycles of the Program command are represented. The Program command is followed by the check of status register data polling bit.
2. PA is address of the memory location to be programmed. PD is the data to be programmed.
3. DQ7# is the complement of the data bit being programmed to DQ7.
4. Addresses differ in x8 mode.

Micron Technology, Inc. reserves the right to change products or specifications without notice.
© 2013 Micron Technology, Inc. All rights reserved.

Figure 22: Chip/Block Erase Waveform

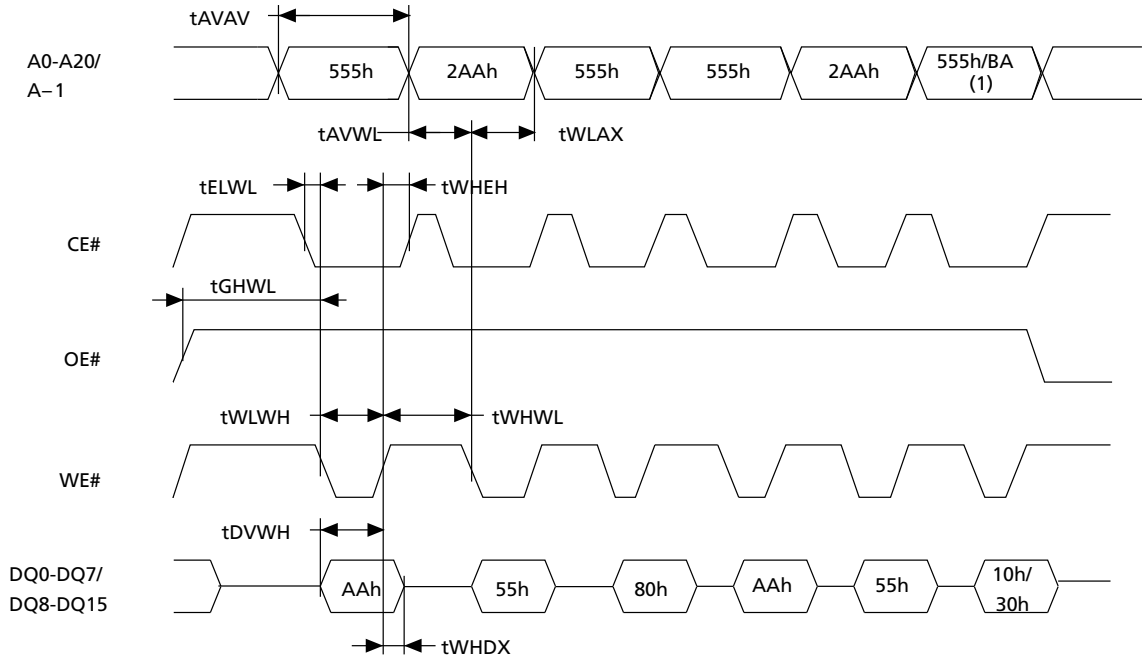

Notes:
1. For a Chip Erase command, addresses and data are 555h and 10h, respectively, while they are BA and 30h for a Block Erase command.
2. BA is the block address.
3. Addresses differ in x8 mode.

Micron Technology, Inc. reserves the right to change products or specifications without notice.
© 2013 Micron Technology, Inc. All rights reserved.

Reset Characteristics

Table 33: Reset/Block Temporary Unprotect AC Characteristics

Condition/Parameter	Symbol		Min/Max	60, 70, 90ns	Unit	Notes
	Legacy	JEDEC				
RST# HIGH to WE# LOW, CE# LOW, OE# LOW	^{t}RH	^{t}PHWL ^{t}PHEL ^{t}PHGL	Min	50	ns	1
RY/BY# HIGH to WE# LOW, CE# LOW, OE# LOW	^{t}RB	^{t}RHWL ^{t}RHEL ^{t}RHGL	Min	0	ns	1
RST# pulse width	^{t}RP	^{t}PLPX	Min	500	ns	
RST# LOW to read mode	^{t}READY	^{t}PLYH	Max	50	µs	1
RST# rise time to V_{ID}	^{t}VIDR	^{t}PHPHH	Min	500	ns	1, 2
V_{PP} rise and fall time	–	^{t}VHVPP	Min	500	ns	1

Notes:
1. Sampled only; not 100% tested.
2. For fast program operations using V_{PP}/WP# at 12V.

Figure 23: Reset/Block Temporary Unprotect AC Waveforms

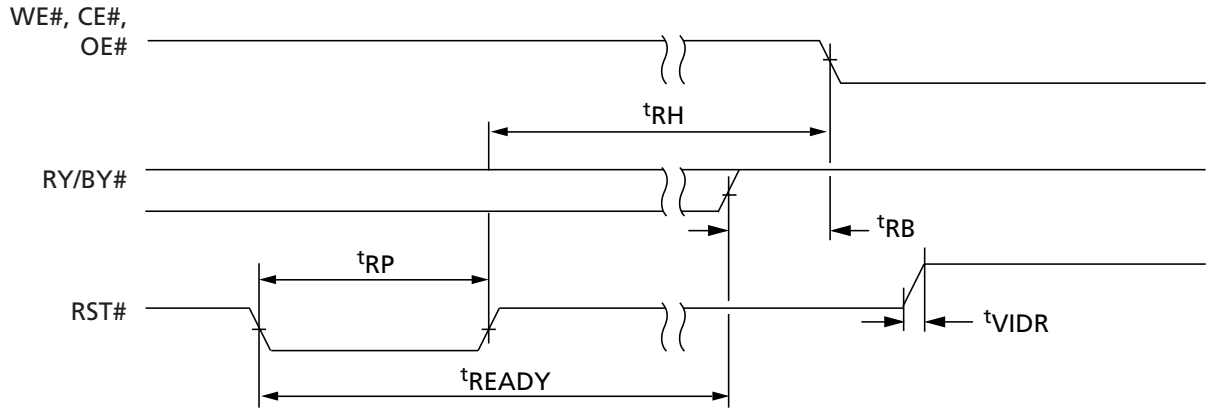

Figure 24: Accelerated Programming Timing Waveform

Micron Technology, Inc. reserves the right to change products or specifications without notice.
© 2013 Micron Technology, Inc. All rights reserved.

Package Dimensions

Figure 25: 48-Pin TSOP – 12mm x 20mm

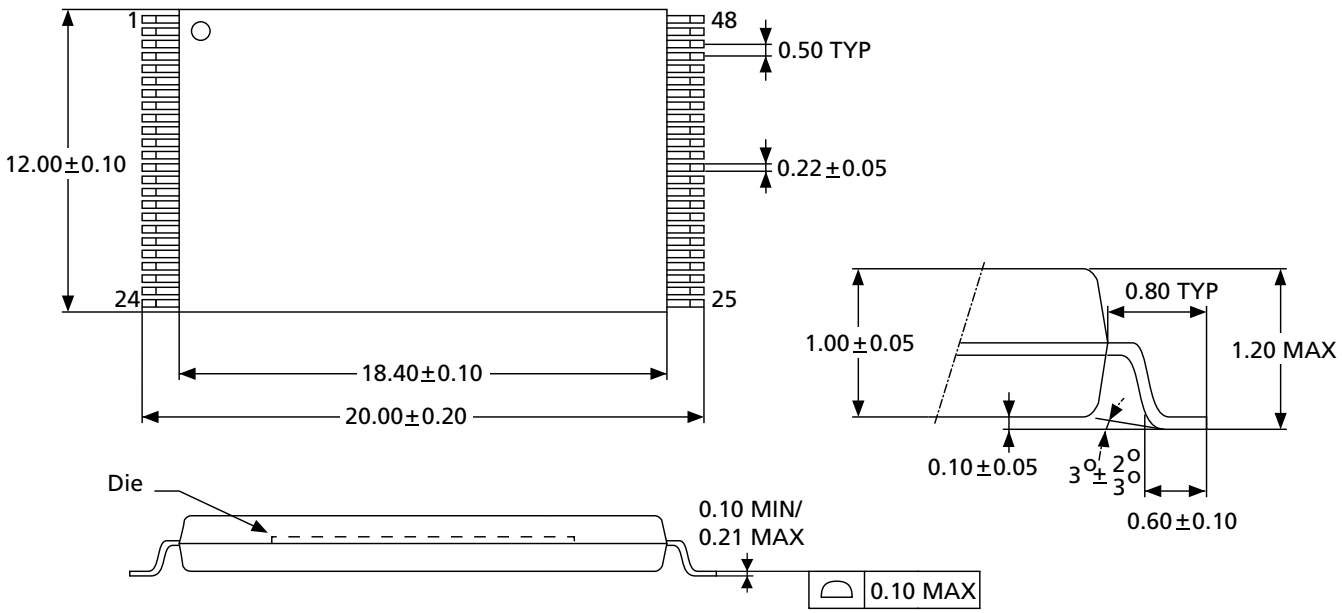

Note: 1. All dimensions are in millimeters.

Micron Technology, Inc. reserves the right to change products or specifications without notice.
© 2013 Micron Technology, Inc. All rights reserved.

Figure 26: 56-Pin TSOP – 14mm x 20mm

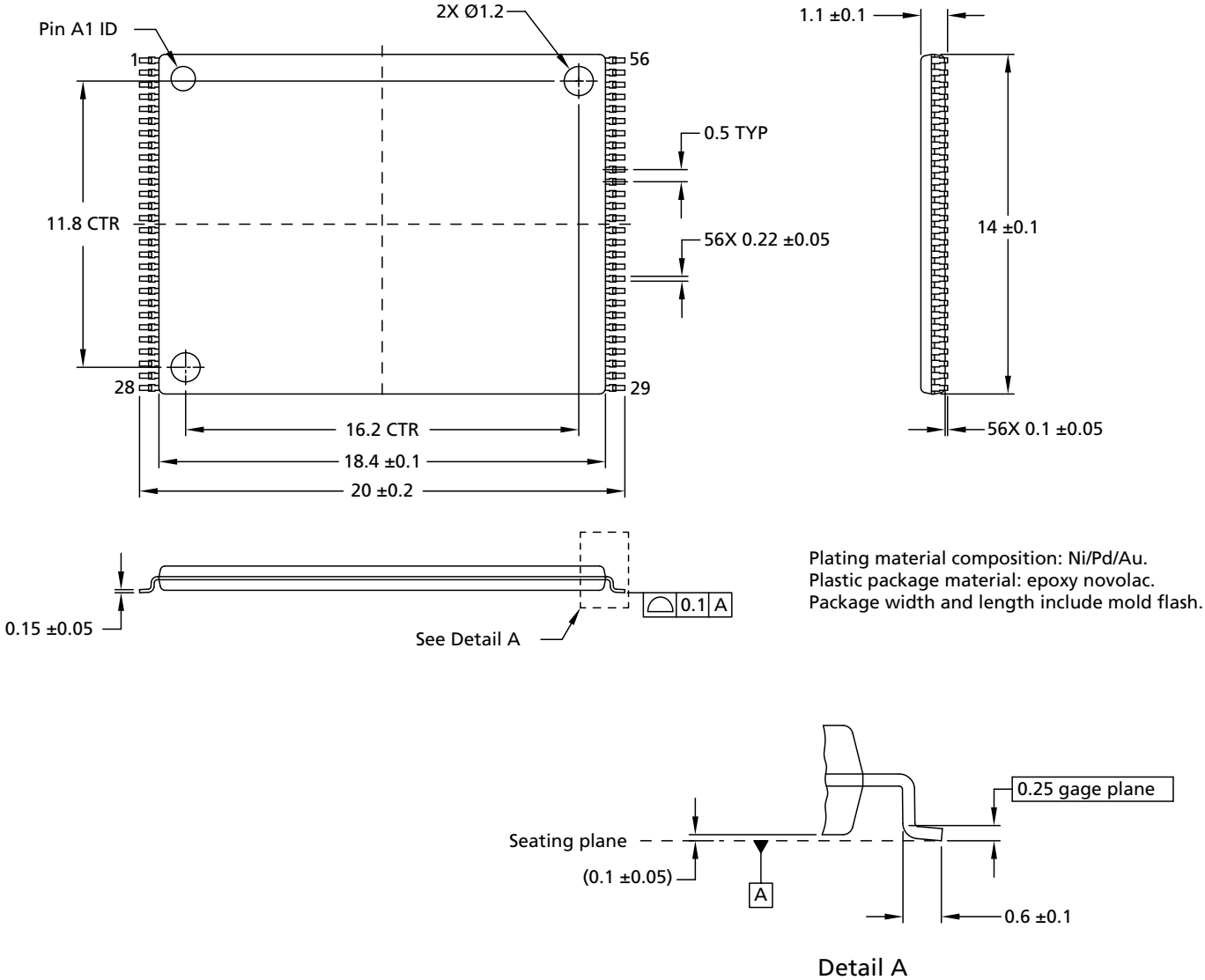

Notes:
1. All dimensions are in millimeters.
2. For the lead width value of 0.22 ±0.05, there is also a legacy value of 0.15 ±0.05.

Micron Technology, Inc. reserves the right to change products or specifications without notice.
© 2013 Micron Technology, Inc. All rights reserved.

Figure 27: 48-Ball TFBGA – 6mm x 8mm

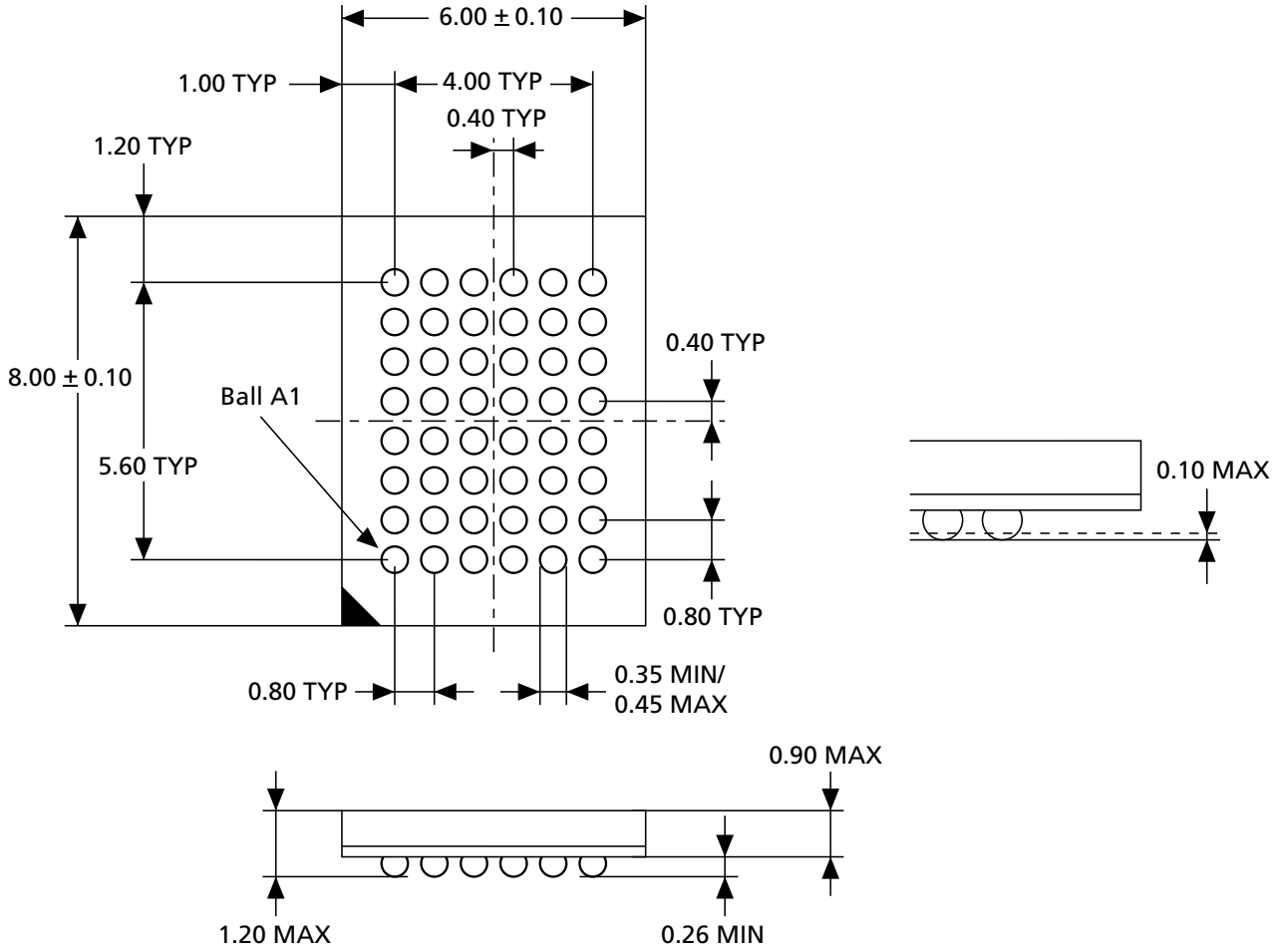

Note: 1. All dimensions are in millimeters.

Micron Technology, Inc. reserves the right to change products or specifications without notice.
© 2013 Micron Technology, Inc. All rights reserved.

Figure 28: 64-Ball TBGA – 10mm x 13mm

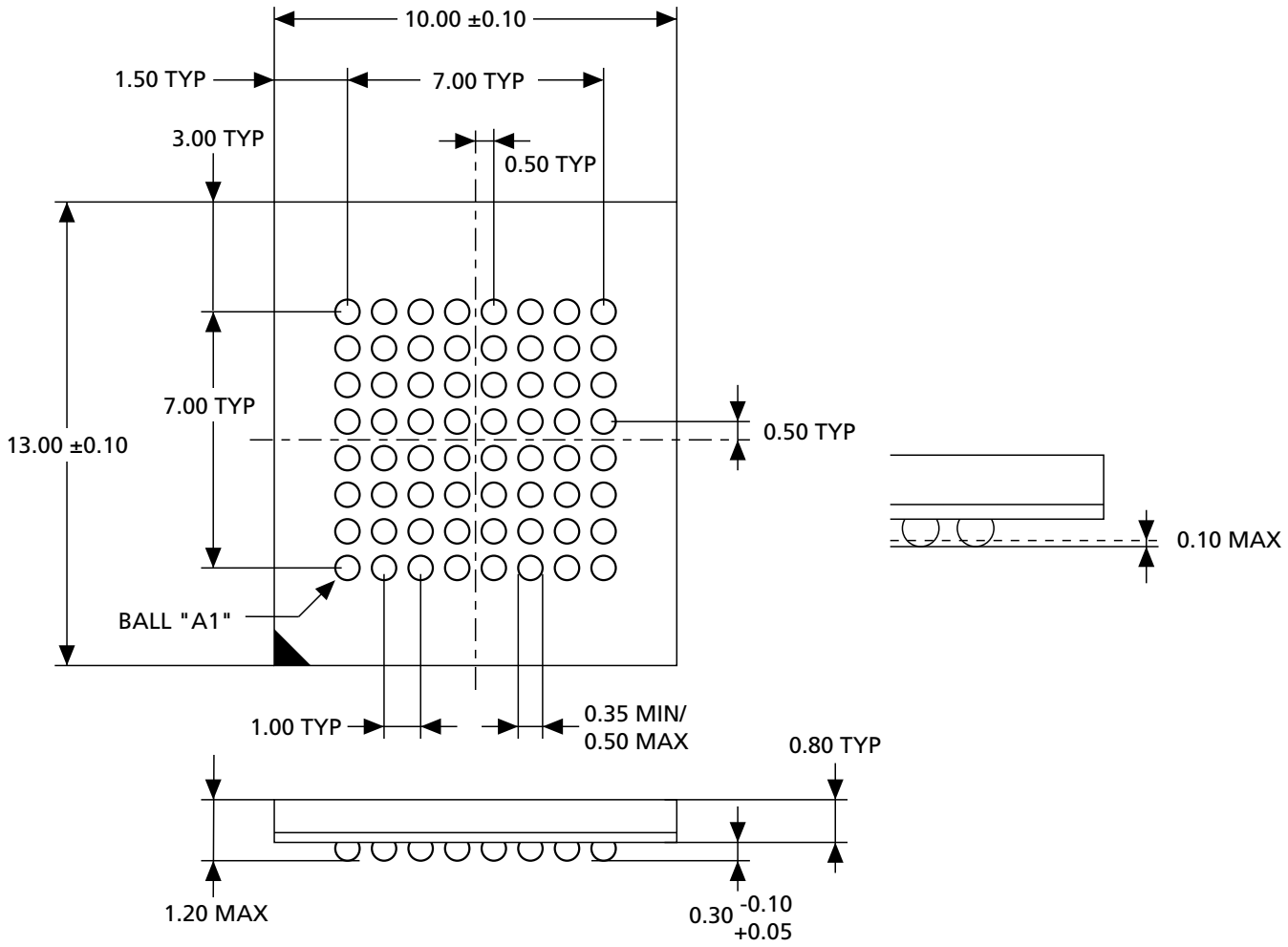

Note: 1. All dimensions are in millimeters.

Micron Technology, Inc. reserves the right to change products or specifications without notice.
© 2013 Micron Technology, Inc. All rights reserved.

Figure 29: 64-Ball FBGA – 11mm x 13mm

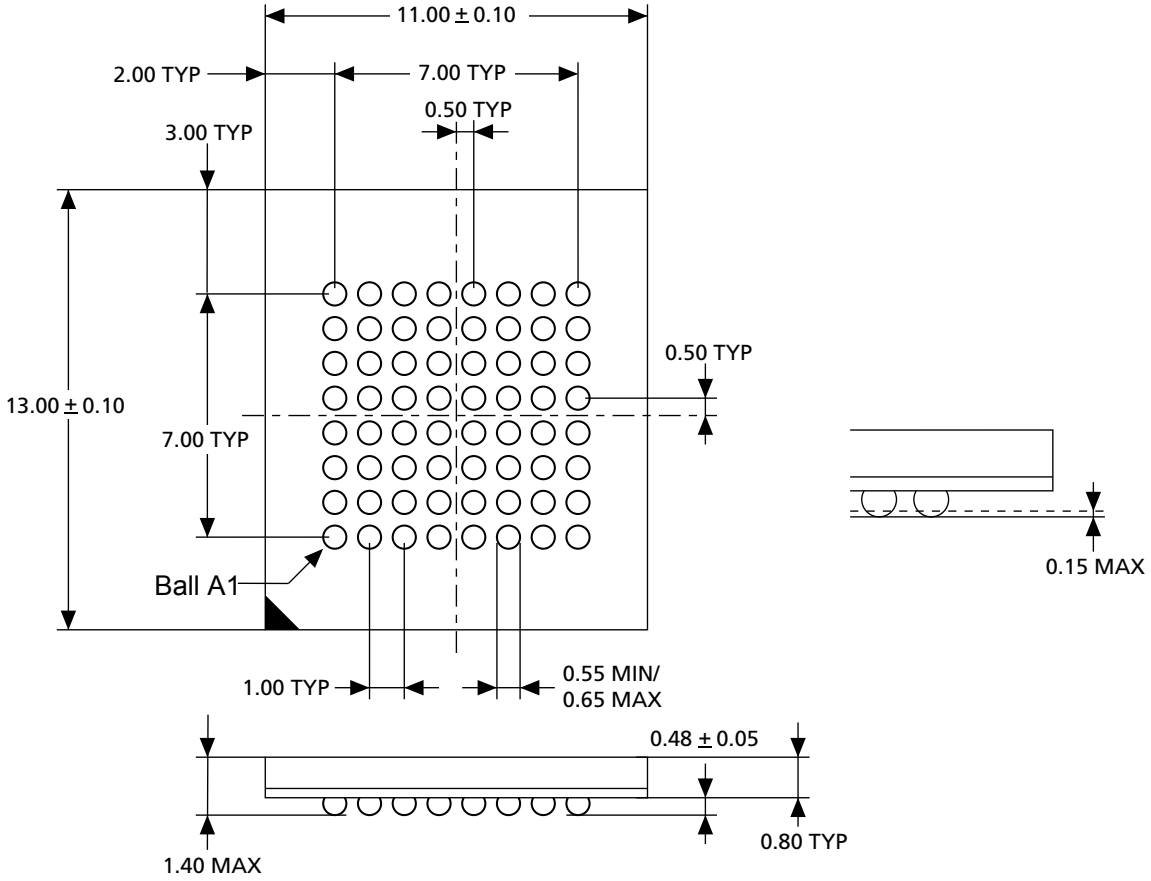

Note: 1. All dimensions are in millimeters.

Micron Technology, Inc. reserves the right to change products or specifications without notice.
© 2013 Micron Technology, Inc. All rights reserved.

Revision History

Rev. E – 2/18

- Added Important Notes and Warnings section for further clarification aligning to industry standards

Rev. D – 03/15

- Updated MPN decoder
- Updated 56-pin TSOP 14mm x 20mm package

Rev. C – 07/13

- Updated Command Interface and Command tables

Rev. B – 06/13

- Removed Part Numbers by Array Matrix table in Features

Rev. A – 11/12

- Initial Micron brand release

8000 S. Federal Way, P.O. Box 6, Boise, ID 83707-0006, Tel: 208-368-4000
www.micron.com/products/support Sales inquiries: 800-932-4992
Micron and the Micron logo are trademarks of Micron Technology, Inc.
All other trademarks are the property of their respective owners.
This data sheet contains minimum and maximum limits specified over the power supply and temperature range set forth herein. Although considered final, these specifications are subject to change, as further product development and data characterization sometimes occur.

Micron Technology, Inc. reserves the right to change products or specifications without notice.
© 2013 Micron Technology, Inc. All rights reserved.

Looking for pricing, stock, or lifecycle information?

Click below to explore more details on WIN SOURCE:

- View M29W640GT60ZA6E on WIN SOURCE
- Micron Technology Inc. Information

Optimize Your Supply Chain with WIN SOURCE Solutions

- Global Sourcing Solution
- Obsolete Management
- Cost Control Management
- Shortage Management
- Alternative Solution
- Excess Inventory Management