THE DATASHEET OF

LTC1555LEGN-1.8#TRPBF

www.win-source.net 0086-755-83957316

SIM Power Supply and Level Translator

FEATURES

- **Buck/Boost Charge Pump Generates 1.8V, 3V or 5V**
- **Input Voltage Range: 2.6V to 6V**
- **Controller V_{CC} Range: 1.425V to 4.4V**
- **>10kV ESD on All SIM Contact Pins**
- **Short-Circuit and Overtemperature Protected**
- **Meets all ETSI and IMT-2000 SIM Interface Requirements**
- 1.8V to 5V Signal Level Translators
- Very Low Operating Current: 32µA
- Very Low Shutdown Current: <1µA
- Soft-Start Limits Inrush Current at Turn-On
- 1MHz Switching Frequency
- Available in 16-Pin Narrow SSOP Package

APPLICATIONS

- SIM Interface in GSM Cellular Telephones
- WCDMA SIM Interface
- Smart Card Readers

DESCRIPTION

The LTC®1555L-1.8 provides power conversion and level shifting needed for low voltage GSM and WCDMA cellular telephones to interface with either 1.8V, 3V or 5V subscriber identity modules (SIMs). The part contains a patented buck/boost charge pump DC/DC converter* that delivers a regulated V_{CC} supply voltage to the SIM card. Input voltage may range from 2.6V to 6V allowing direct connection to the battery. The output voltage may be programmed to 1.8V, 3V, 5V or direct connection to the V_{IN} pin.

Internal level translators allow controllers operating with supplies as low as 1.425V to interface with 1.8V, 3V and 5V SIMs. A soft-start feature limits inrush current at turn-on, mitigating start-up problems that may result when the input is supplied by another low-power DC/DC converter. Battery life is maximized by 32µA operating current, and 1µA shutdown current. Board area is minimized by the miniature 16-pin narrow SSOP packages and the need for only three small external capacitors.

LT, LTC and LT are registered trademarks of Linear Technology Corporation.
*U.S. Patent No.: 5,973,944

TYPICAL APPLICATION

GSM Cellular Telephone SIM Interface

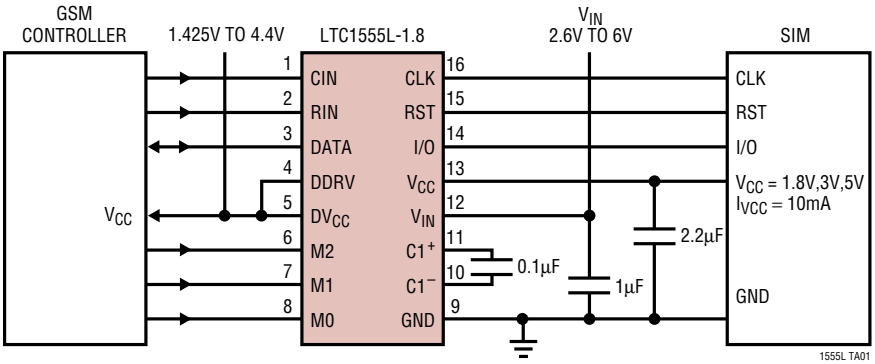

ABSOLUTE MAXIMUM RATINGS

(Note 1)

V_{IN}, DV_{CC} to GND ..... –0.3V to 6.5V
V_{CC} to GND ..... –0.3V to 6.5V
Digital Inputs to GND ..... –0.3V to 6.5V
CLK, RST, I/O to GND ..... –0.3V to V_{CC} + 0.3V
V_{CC} Short-Circuit Duration ..... Indefinite
Operating Temperature Range (Note 2) .. –40°C to 85°C
Storage Temperature Range ..... –65°C to 150°C
Lead Temperature (Soldering,10 sec) ..... 300°C

PACKAGE/ORDER INFORMATION

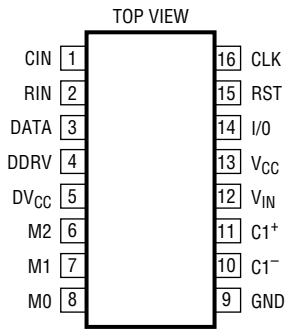

GN PACKAGE
16-LEAD PLASTIC SSOP

T_{JMAX} = 125°C, θ_{JA} = 150°C/W

ORDER PART NUMBER
LTC1555LEGN-1.8
GN PART MARKING
555L18

Consult factory for parts specified with wider operating temperature ranges.

ELECTRICAL CHARACTERISTICS

The ● denotes the specifications which apply over the full operating temperature range, otherwise specifications are at T_A = 25°C. (V_{IN} = 2.6V to 6V, DV_{CC} = 1.425V to 4.4V, controller digital pins tied to DV_{CC}, SIM digital pins floating, C1 = 0.1μF, C_{OUT} = 2.2μF unless otherwise noted)

PARAMETER	CONDITIONS		MIN	TYP	MAX	UNITS
V_{IN} Operating Voltage		●	2.6		6	V
DV_{CC} Operating Voltage		●	1.425		4.4	V
DV_{CC} Undervoltage Lockout				1.2		V
V_{IN} Operating Current	V_{CC} = 3V, I_{VCC} = 0V	●		27	65	μA
V_{IN} Shutdown Current	M0, M1 = 0V	●			1	μA
DV_{CC} Operating Current	M0, M1, DATA = DV_{CC}, C_{IN} = 1MHz	●		5	30	μA
DV_{CC} Shutdown Current	M0, M1 = 0V, DATA, C_{IN} = DV_{CC}	●			1	μA
V_{CC} Output Voltage	$0 \le I_{VCC} \le 10mA$					
	M0, M1 = DV_{CC}, $2.6V \le V_{IN} \le 6V$	●	4.55	5	5.25	V
	M0, M1 = DV_{CC}, $2.7V \le V_{IN} \le 6V$	●	4.75	5	5.25	V
	M0 = DV_{CC}, M1 = 0	●	2.8	3	3.2	V
	M0 = 0, M1 = DV_{CC}	●	V_{IN} – 0.2		V_{IN}	V
	M0 = DV_{CC}, M1 = 0, M2 = DV_{CC}, $0 \le I_{VCC} \le 6mA$	●	1.71	1.8	1.89	V
	M0 = DV_{CC}, M1 = 0, M2 = DV_{CC}, $V_{IN} \ge 3V$, $I_{VCC} \le 10mA$	●	1.71	1.8	1.89	V
V_{CC} Short-Circuit Current	V_{CC} Shorted to GND	●		50	150	mA
Charge Pump f_{OSC}				1		MHz

ELECTRICAL CHARACTERISTICS

The ● denotes the specifications which apply over the full operating temperature range, otherwise specifications are at T_A = 25°C. (V_{IN} = 2.6V to 6V, DV_{CC} = 1.425V to 4.4V, controller digital pins tied to DV_{CC}, SIM digital pins floating, C1 = 0.1µF, C_{OUT} = 2.2µF unless otherwise noted)

PARAMETER	CONDITIONS		MIN	TYP	MAX	UNITS
Controller Inputs/Outputs (DV_{CC} = 1.8V)						
Input Current (I_{IH} /I_{IL})	M0, M1, M2, RIN, CIN	●	–100		100	nA
Input Current (I_{IH} /I_{IL})	DDRV	●	–5		5	µA
High Level Input Current (I_{IH})	DATA	●	–20		20	µA
Low Level Input Current (I_{IL})	DATA	●			1	mA
High Input Voltage Threshold (V_{IH})	M0, M1, M2, RIN, CIN, DDRV DATA	● ●			$0.7 \times DV_{CC}$ DV_{CC} – 0.6	V V
Low Input Voltage Threshold (V_{IL})	M0, M1, M2, RIN, CIN, DDRV DATA	● ●	$0.2 \times DV_{CC}$ 0.4			V V
High Level Output Voltage (V_{OH})	DATA Source Current = 20µA I/O = V_{CC}	●	$0.7 \times DV_{CC}$			V
Low Level Output Voltage (V_{OL})	DATA Sink Current = –200µA I/O = 0V (Note 3)	●			0.4	V
DATA Pull-Up Resistance	Between DATA and DV_{CC}	●	13	20	30	kΩ
DATA Output Rise/Fall Time	DATA Loaded with 30pF	●		1.3	2	µs
SIM Inputs/Outputs (V_{CC} = 3V or 5V)						
I/O High Input Voltage Threshold (V_{IH})	$I_{IH(MAX)}$ = ±20µA	●			$0.7 \times V_{CC}$	V
I/O Low Input Voltage Threshold (V_{IL})	$I_{IL(MAX)}$ = 1mA	●	0.4			V
High Level Output Voltage (V_{OH})	I/O, Source Current = 20µA DATA or DDRV = DV_{CC}	●	$0.8 \times V_{CC}$			V
Low Level Output Voltage (V_{OL})	I/O, Sink Current = –1mA DATA or DDRV = 0V (Note 3)	●			0.4	V
High Level Output Voltage (V_{OH})	RST, CLK Source Current = 20µA	●	$0.9 \times V_{CC}$			V
Low Level Output Voltage (V_{OL})	RST, CLK Sink Current = –200µA	●			0.4	V
I/O Pull-Up Resistance	Between I/O and V_{CC}	●	6.5	10	14	kΩ
SIM Inputs/Outputs (V_{CC} = 1.8V)						
I/O High Input Voltage Threshold (V_{IH})	$I_{IH(MAX)}$ = ±20µA	●			$0.7 \times V_{CC}$	V
I/O Low Input Voltage Threshold (V_{IL})	$I_{IL(MAX)}$ = 1mA	●	$0.2 \times V_{CC}$			V
High Level Output Voltage (V_{OH})	I/O, Source Current = 20µA DATA or DDRV = DV_{CC}	●	$0.8 \times V_{CC}$			V
Low Level Output Voltage (V_{OL})	I/O, Sink Current = –200µA DATA or DDRV = 0V (Note 3)	●			0.4	V
High Level Output Voltage (V_{OH})	RST, CLK Source Current = 20µA	●	$0.9 \times V_{CC}$			V
Low Level Output Voltage (V_{OL})	RST, CLK Sink Current = –200µA	●			$0.2 \times V_{CC}$	V
SIM Timing Parameters (DV_{CC} = 1.8V, V_{CC} = 5V)						
CLK Rise/Fall Time	CLK Loaded with 30pF, V_{CC} = 3V or 5V V_{CC} = 1.8V	● ●			18 50	ns ns
RST, I/O Rise/Fall Time	RST, I/O Loaded with 30pF	●			1	µs
CLK Frequency	CLK Loaded with 30pF	●			5	MHz
V_{CC} Turn-On Time	C_{OUT} = 2.2µF, I_{VCC} = 0			0.5		ms
V_{CC} Discharge Time to 1V	I_{VCC} = 0, V_{CC} = 5V, C_{OUT} = 2.2µF			0.5		ms

Note 1: Absolute Maximum Ratings are those values beyond which the life of a device may be impaired.

Note 2: The LTC1555LEGN-1.8 is guaranteed to meet performance specifications from 0°C to 70°C. Specifications over the –40°C to 85°C operating temperature range are assured by design, characterization and correlation with statistical process controls.

Note 3: The DATA and I/O pull-down drivers must also sink current sourced by the internal pull-up resistor.

TYPICAL PERFORMANCE CHARACTERISTICS

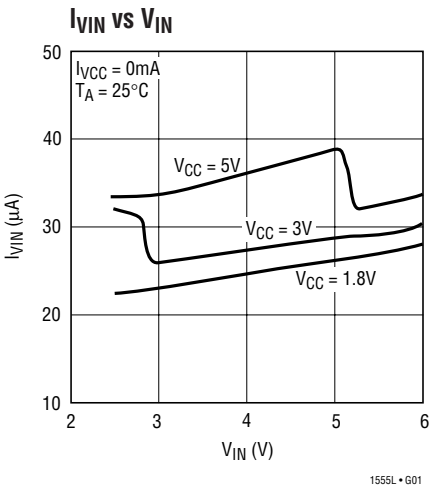

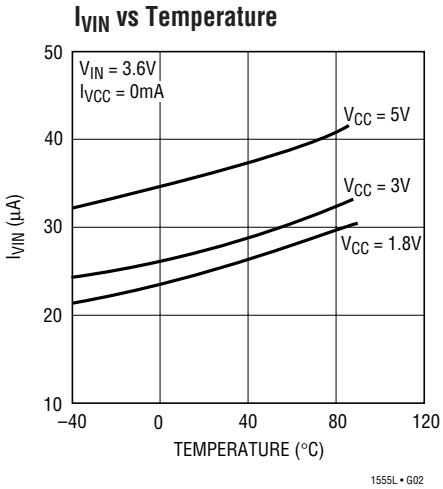

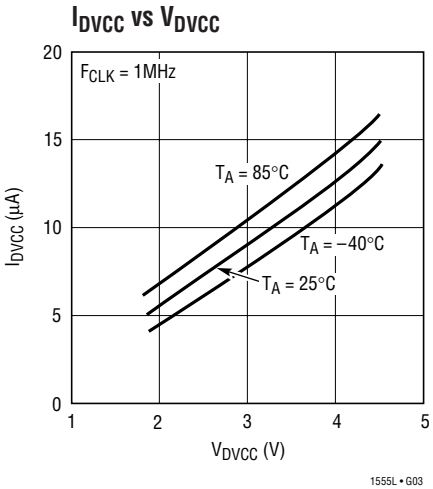

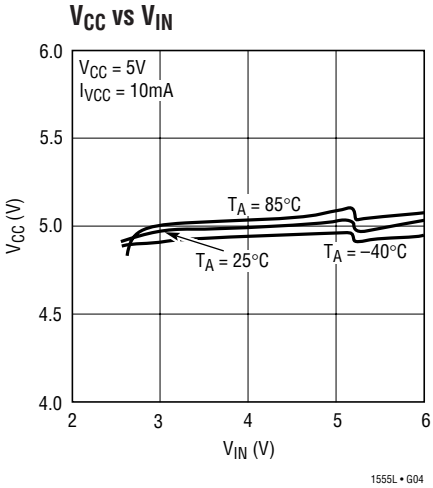

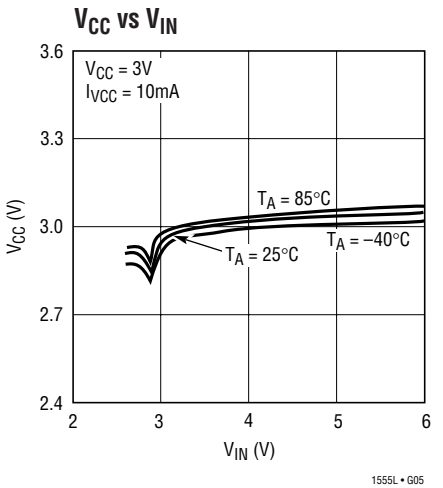

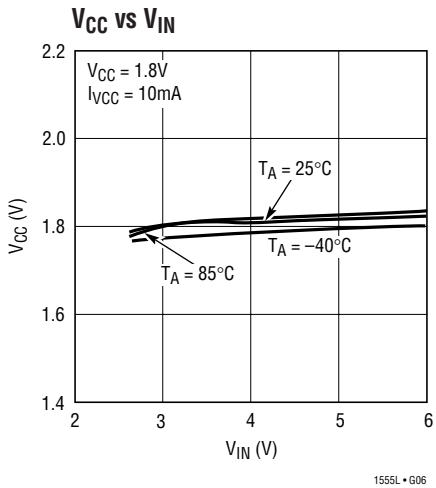

PIN FUNCTIONS

CIN (Pin 1): Clock Input Pin from Controller.

RIN (Pin 2): Reset Input Pin from Controller.

DATA (Pin 3): Controller Side Data Input/Output Pin. Can be used for single pin bidirectional data transfer between the controller and the SIM card as long as the controller data pin is open drain. The controller output must be able to sink 1mA max when driving the DATA pin low due to the internal pull-up resistors on the DATA and I/O pins. If the controller data output is not open drain, then the DDRV pin should be used for sending data to the SIM card and the DATA pin used for receiving data from the SIM card.

DDRV (Pin 4): Optional Data Input Pin for Sending Data to the SIM Card. When not needed, the DDRV pin should either be left floating or tied to DV_{CC} (an internal 1µA current source will pull the DDRV pin up to DV_{CC} if left floating).

DV_{CC} (Pin 5): Supply Voltage for Controller Side Digital Input/Output Pins (typically 3V). May be between 1.425V and 4.4V. The DV_{CC} supply may be powered-down in shutdown for further reduction in battery current. When DV_{CC} drops below 1.2V, the charge pump is disabled and the LTC1555L-1.8 goes into shutdown mode regardless of the signals on the M0-M2 pins.

PIN FUNCTIONS

M2 (Pin 6): Mode Control Bit 2 (see Table 1). (Pin 6 was previously used for soft-start control on the LTC1555.)

M1 (Pin 7): Mode Control Bit 1 (see Table 1).

M0 (Pin 8): Mode Control Bit 0 (see Table 1).

GND (Pin 9): Ground for Both the SIM and the Controller. Should be connected to the SIM GND contact as well as to the V_{IN}/controller GND. Proper grounding and supply bypassing is required to meet 10kV ESD specifications.

C1⁻ (Pin 10): Charge Pump Flying Capacitor Negative Input.

C1⁺ (Pin 11): Charge Pump Flying Capacitor Positive Input.

Table 1. Truth Table

M0	M1	M2	OPERATING MODE
0V	0V	0V or DV_{CC}	Shutdown (V_{CC} = 0V)
0V	DV_{CC}	0V or DV_{CC}	$V_{CC} = V_{IN}$
DV_{CC}	0V	0V	V_{CC} = 3V
DV_{CC}	0V	DV_{CC}	V_{CC} = 1.8V
DV_{CC}	DV_{CC}	0V or DV_{CC}	V_{CC} = 5V

V_{IN} (Pin 12): Charge Pump Input Pin. May be between 2.6V and 6V. There is no power-up sequencing requirement for V_{IN} with respect to DV_{CC}.

V_{CC} (Pin 13): SIM Card V_{CC} Output. Should be connected to the SIM V_{CC} contact. The V_{CC} output voltage is determined by the M0-M2 pins (see Table 1). V_{CC} is discharged to GND during shutdown (M0, M1 = 0V). A 2.2µF low ESR ouptut capacitor should connect close to the V_{CC} pin.

I/O (Pin 14): SIM Side I/O Pin. The pin is an open drain output with a nominal pull-up resistance of 10kΩ and should be connected to the SIM I/O contact. The SIM card must sink up to 1mA max when driving the I/O pin low due to the internal pull-up resistors on the I/O and DATA pins. The I/O pin is held active low during shutdown.

RST (Pin 15): Level Shifted Reset Output Pin. Should be connected to the SIM RST contact.

CLK (Pin 16): Level Shifted Clock Output Pin. Should be connected to the SIM CLK contact. Careful trace routing is recommended due to fast rise and fall edge speeds.

BLOCK DIAGRAM

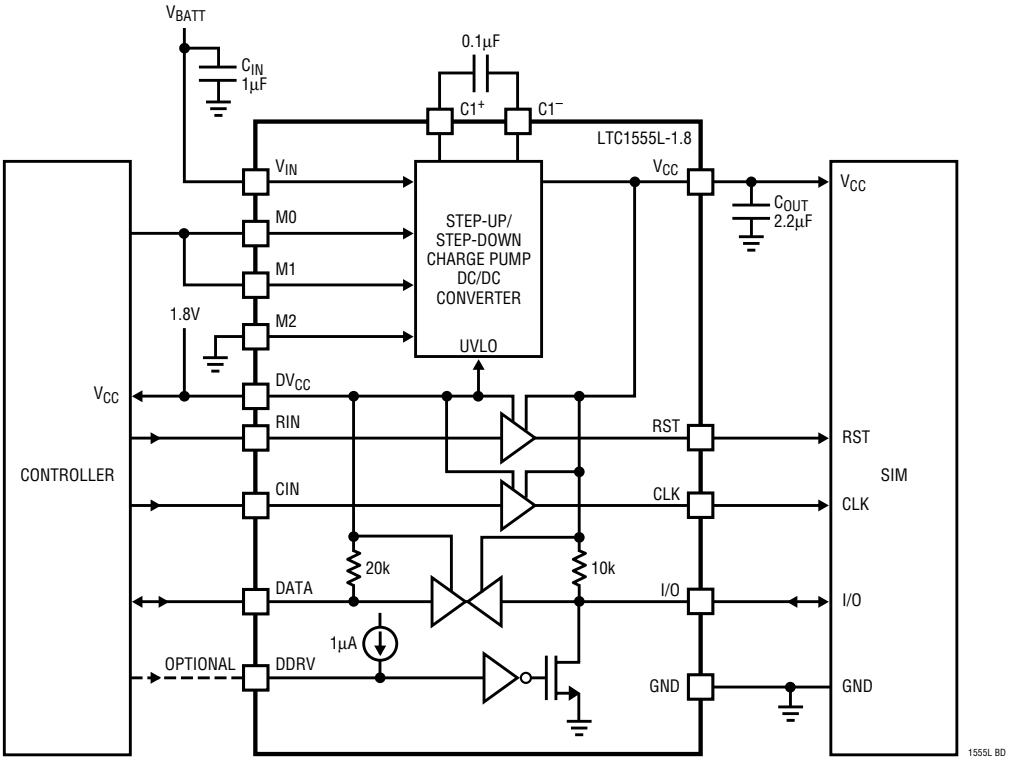

APPLICATIONS INFORMATION

The LTC1555L-1.8 performs the two primary functions necessary for low voltage controllers (e.g., GSM cellular telephone controllers, smart card readers, etc.) to communicate with 5V SIMs or smart cards. The part produces a regulated 1.8V, 3V or 5V V_{CC} supply for the SIM, and also provides level translators for communication between the SIM and the controller.

V_{CC} Voltage Regulator

The regulator section of the LTC1555L-1.8 (refer to Block Diagram) consists of a buck/boost charge pump DC/DC converter. The charge pump can operate over a wide input voltage range (2.6V to 6V) while maintaining a regulated V_{CC} output. The wide V_{IN} range enables the part to be powered directly from a battery (if desired) rather than from a DC/DC converter output. When V_{IN} is less than the selected V_{CC} voltage, the part operates as a switched capacitor voltage doubler. When V_{IN} is greater than V_{CC}, the part operates as gated switch step-down converter. In either case, voltage conversion requires only one small flying capacitor and output capacitor.

The V_{CC} output can be programmed via the M0-M2 pins to either 1.8V, 3V, 5V or direct connection to V_{IN}. This flexibility is useful in applications where multiple voltage SIMs may be used. When the charge pump is put into shutdown (M0, M1 = 0), V_{CC} is pulled to GND via an internal switch to aid in proper system supply sequencing.

An internal soft-start feature helps to limit inrush currents upon start-up or when coming out of shutdown mode. Inrush current limiting is especially useful when powering the LTC1555L-1.8 from a DC/DC output since the unlimited inrush current may approach 300mA and cause voltage transients on the 3V supply. The part is fully short-circuit and over temperature protected, and can survive an indefinite short from V_{CC} to GND.

Capacitor Selection

For best performance, it is recommended that low ESR (< 0.5Ω) capacitors be used for both C_{IN} and C_{OUT} to reduce noise and ripple. The C_{IN} and C_{OUT} capacitors should be either ceramic or tantalum and should be 1µF or greater (ceramic capacitors will produce the smallest output ripple). If the input source impedance is very low (< 0.5Ω), C_{IN} may not be needed. Increasing the size of C_{OUT} to 2.2µF or greater will reduce output voltage ripple—particularly with high V_{IN} voltages (4V or greater). A ceramic capacitor is recommended for the flying capacitor C1 with a value of 0.1µF or 0.22µF.

Output Ripple

Normal LTC1555L-1.8 operation produces voltage ripple on the V_{CC} pin. Output voltage ripple is required for the parts to regulate. Low frequency ripple exists due to the hysteresis in the sense comparator and propagation delays in the charge pump enable/disable circuits. High frequency ripple is also present mainly from the ESR (equivalent series resistance) in the output capacitor. Typical output ripple (V_{IN} < 4V) under maximum load is 75mV peak-to-peak with a low ESR, 2.2µF output capacitor (V_{CC} = 5V).

The magnitude of the ripple voltage depends on several factors. High input voltages increase the output ripple since more charge is delivered to C_{OUT} per charging cycle. A large C1 flying capacitor (> 0.22µF) also increases ripple in step-up mode for the same reason. Large output current load and/or a small output capacitor (< 1µF) results in higher ripple due to higher output voltage dV/dt. High ESR capacitors (ESR > 0.5Ω) on the output pin cause high frequency voltage spikes on V_{OUT} with every clock cycle.

A 2.2µF ceramic capacitor on the V_{CC} pin should produce acceptable levels of output voltage ripple in nearly all applications. Also, in order to keep noise down all capacitors should be placed close to LTC1555L-1.8.

Level Translators

All SIMs and smart cards contain a clock input, a reset input, and a bidirectional data input/output. The LTC1555L-1.8 provides level translators to allow controllers to communicate with the SIM. (See Figure 1a and 1b). The CLK and RST inputs to the SIM are level shifted from the controller supply rails (DV_{CC} and GND) to the SIM supply rails (V_{CC} and GND). The data input to the SIM may be provided two different ways. The first method is to use the DATA pin as a bidirectional level translator.

APPLICATIONS INFORMATION

This configuration is only allowed if the controller data output pin is open drain (all SIM I/O pins are open drain). Internal pull-up resistors are provided for both the DATA pin and the I/O pin on the SIM side. The second method is to use the DDRV pin to send data to the SIM and use the DATA pin to receive data from the SIM. When the DDRV pin is not used, it should either be left floating or tied to DV_{CC}.

Shutting Down the DV_{CC} Supply

To conserve power, the DV_{CC} supply may be shut down while the V_{IN} supply is still active. When the DV_{CC} supply is forced below 1.2V, an undervoltage lockout circuit forces the LTC1555L-1.8 into shutdown mode regardless of the status of the M0-M2 pins.

10kV ESD Protection

All pins that connect to the SIM (CLK, RST, I/O, V_{CC}, GND) withstand over 10kV of human body model ESD. In order to ensure proper ESD protection, careful board layout is required. The GND pin should be tied directly to a GND plane. The V_{CC} capacitor should be located very close to the V_{CC} pin and tied immediately to the GND plane.

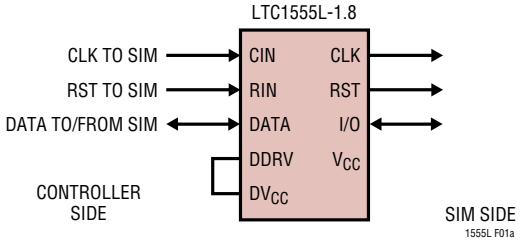

Figure 1a. Level Translator Connections for Bidirectional Controller DATA Pin

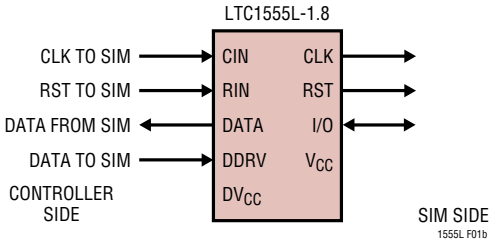

Figure 1b. Level Translator Connections for One-Directional Controller Side DATA Flow

TYPICAL APPLICATION

WCDMA Cellular Telephone SIM Interface

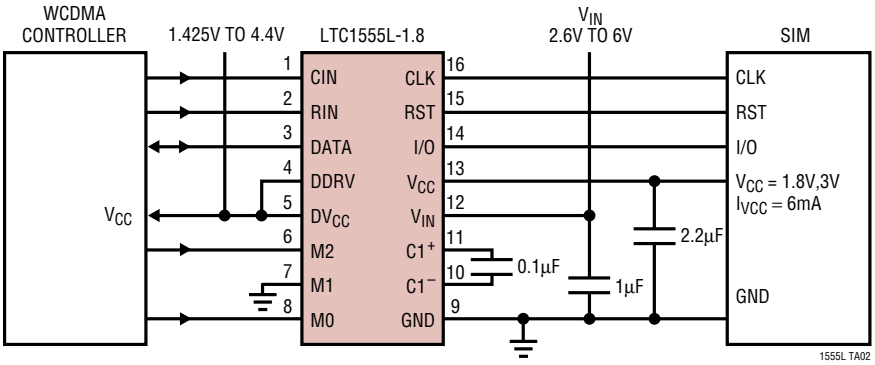

PACKAGE DESCRIPTION

Dimensions in inches (millimeters) unless otherwise noted.

GN Package
16-Lead Plastic SSOP (Narrow 0.150)
(LTC DWG # 05-08-1641)

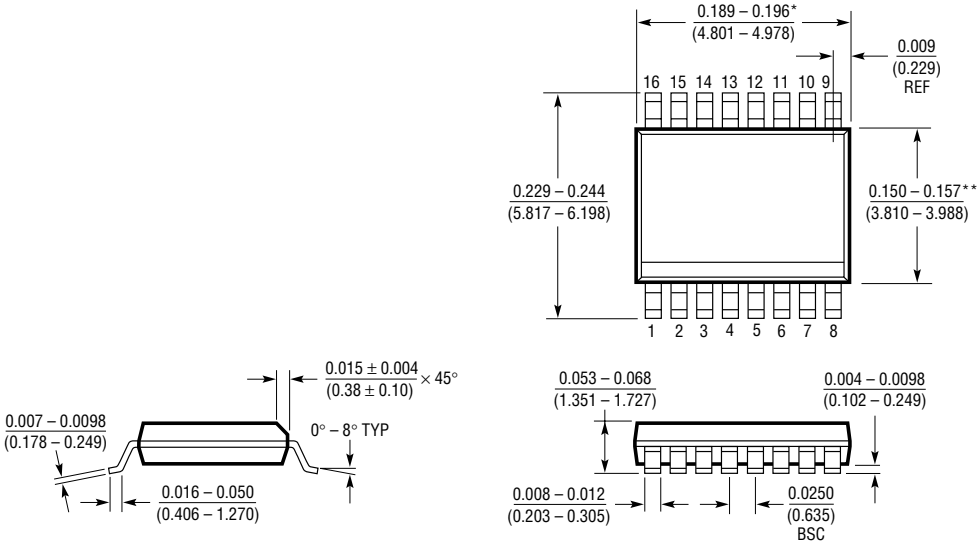

* DIMENSION DOES NOT INCLUDE MOLD FLASH. MOLD FLASH SHALL NOT EXCEED 0.006" (0.152mm) PER SIDE

** DIMENSION DOES NOT INCLUDE INTERLEAD FLASH. INTERLEAD FLASH SHALL NOT EXCEED 0.010" (0.254mm) PER SIDE

RELATED PARTS

PART NUMBER	DESCRIPTION	COMMENTS
LTC1555/LTC1556	SIM Power Supply and Level Translator	V_{IN} = 2.7V to 10V; Step-Up/-Down Charge Pump
LTC1555L	SIM Power Supply and Level Translator	V_{IN} = 2.6V to 6V; Step-Up/-Down Charge Pump; DV_{CC} as low as 1.425V
LTC1755	Smart Card Interface	V_{IN} = 2.7V to 6V; 24-Pin SSOP Package; I_Q = 60µA
LTC1756	Smart Card Interface	V_{IN} = 2.7V to 6V; 16-Pin SSOP Package; I_Q = 75µA
LTC1986	3V/5V SIM Power Supply in SOT-23	V_{IN} = 2.6V to 4.4V; I_Q = 14µA

Linear Technology Corporation
1630 McCarthy Blvd., Milpitas, CA 95035-7417
(408)432-1900 • FAX: (408) 434-0507 • www.linear-tech.com
1555l18f LT/TP 0601 2K • PRINTED IN USA
© LINEAR TECHNOLOGY CORPORATION 2000

Looking for pricing, stock, or lifecycle information?

Click below to explore more details on WIN SOURCE:

- View LTC1555LEGN-1.8#TRPBF on WIN SOURCE
- Linear Technology Information

Optimize Your Supply Chain with WIN SOURCE Solutions

- Global Sourcing Solution
- Obsolete Management
- Cost Control Management
- Shortage Management
- Alternative Solution
- Excess Inventory Management