THE DATASHEET OF

LQG18HNR10J00D

www.win-source.net 0086-755-83957316

CHIP COILS (CHIP INDUCTORS) LQG18HN□□□□00□ REFERENCE SPECIFICATION

1. Scope

This reference specification applies to chip coils (chip inductors) LQG18HN_00 series for general electronic equipment.

2. Part Numbering

(Ex.)

LQ	G	18	H	N	1N2	S	0	0	D
Product ID	Structure	Dimension (L × W)	Application and characteristic	Category	Inductance	Tolerance	Performance	Electrode specification	Packaging D: taping *B: bulk

*B: Bulk packing is also available.

3. Part Number and Rating

Operating temperature range	-40°C to +85°C
Storage temperature range	-55°C to +125°C

Customer Part number	Murata Part number	Inductance		Q (Min.)	DC resistance (Ω max.)	Self-resonant frequency (MHz min.)	Rated current (mA)
		Nominal value (nH)	Tolerance				
	LQG18HN1N2S00D	1.2	±0.3 nH	12	0.10	6000	1100
	LQG18HN1N5S00D	1.5	±0.3 nH	12	0.10	6000	1100
	LQG18HN1N8S00D	1.8	±0.3 nH	12	0.10	6000	1100
	LQG18HN2N2S00D	2.2	±0.3 nH	12	0.10	6000	1100
	LQG18HN2N7S00D	2.7	±0.3 nH	12	0.12	6000	1000
	LQG18HN3N3S00D	3.3	±0.3 nH	12	0.12	6000	1000
	LQG18HN3N9S00D	3.9	±0.3 nH	12	0.15	6000	900
	LQG18HN4N7S00D	4.7	±0.3 nH	12	0.15	6000	900
	LQG18HN5N6S00D	5.6	±0.3 nH	12	0.20	5000	800
	LQG18HN6N8J00D	6.8	±5%	12	0.20	5000	800
	LQG18HN8N2J00D	8.2	±5%	12	0.20	4000	800
	LQG18HN10NJ00D	10	±5%	12	0.30	3500	650
	LQG18HN12NJ00D	12	±5%	12	0.35	3000	600
	LQG18HN15NJ00D	15	±5%	12	0.35	2800	600
	LQG18HN18NJ00D	18	±5%	12	0.37	2600	600
	LQG18HN22NJ00D	22	±5%	12	0.50	2300	500
	LQG18HN27NJ00D	27	±5%	12	0.54	2000	500
	LQG18HN33NJ00D	33	±5%	12	0.54	1700	500
	LQG18HN39NJ00D	39	±5%	12	0.60	1500	450
	LQG18HN47NJ00D	47	±5%	12	0.70	1200	400
	LQG18HN56NJ00D	56	±5%	12	0.75	1100	400
	LQG18HN68NJ00D	68	±5%	12	0.80	1000	400
	LQG18HN82NJ00D	82	±5%	12	0.85	900	350
	LQG18HNR10J00D	100	±5%	12	0.90	800	350

4. Testing Conditions

Unless otherwise specified	Temperature: ordinary temperature (15°C to 35°C) Humidity: ordinary humidity [25% to 85% (RH)]
In case of doubt	Temperature: 20°C±2°C Humidity: 60% to 70% (RH) Atmospheric pressure: 86 kPa to 106 kPa

5. Appearance and Dimensions

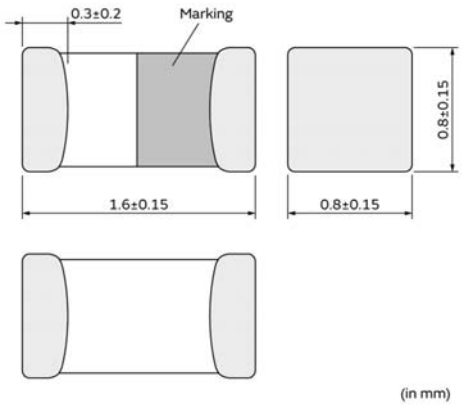

Unit mass (typical value): 0.003 g

6. Marking

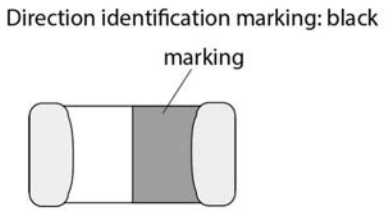

7. Electrical Performance

No.	Item	Specification	Test method
7.1	Inductance	Meet chapter 3 ratings.	Measuring equipment: Keysight E4991A or the equivalent Measuring frequency: 100 MHz Measuring conditions: Measurement signal level: Approx. 0 dBm Measurement terminal distance: 1.0 mm Electrical length: 10 mm Weight: Approx. 1 N to 5 N Position the chip coil under test as shown in the measuring example below and connect it to the electrode by applying weight. Measurement example: 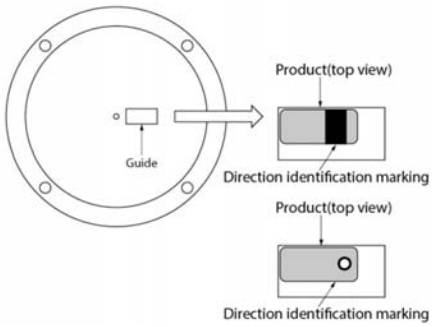 Measuring method: see "Electrical performance: Measuring method for inductance/Q" in the Appendix.
7.2	Q	Meet chapter 3 ratings.	
7.3	DC resistance	Meet chapter 3 ratings.	Measuring equipment: digital multimeter
7.4	Self-resonant frequency	Meet chapter 3 ratings.	Measuring equipment: Keysight 8753C or the equivalent
7.5	Rated current	Product temperature rise: 25°C max.	Apply the rated current specified in chapter 3.

8. Mechanical Performance

No.	Item	Specification	Test method
8.1	Shear test	No significant mechanical damage or no sign of electrode peeling off shall be observed.	Test substrate: glass-epoxy substrate Applying force: 10 N Holding time: 5 s±1 s Force application direction: 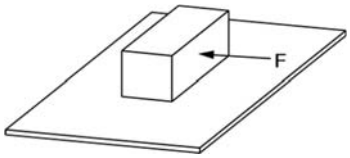
8.2	Bending test	No significant mechanical damage or no sign of electrode peeling off shall be observed.	Test substrate: glass-epoxy substrate (100 mm × 40 mm × 1.0 mm) Pressurizing speed: 1 mm/s Pressure jig: R340 Deflection: 2 mm Holding time: 30 s 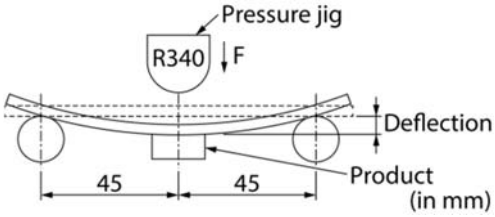
8.3	Vibration	Appearance shall have no significant mechanical damage. Inductance change rate: within ±10%	Oscillation frequency: 10 Hz to 55 Hz to 10 Hz, for approx. 1 min Total amplitude: 1.5 mm Test time: 3 directions perpendicular to each other, 2 h for each direction (6 h in total)
8.4	Solderability	90% or more of the outer electrode shall be covered with new solder seamlessly.	Flux: immersed in ethanol solution with a rosin content of 25(wt)% for 5 s to 10 s Solder: Sn-3.0Ag-0.5Cu solder Pre-heating: 150°C±10°C/60 s to 90 s Solder temperature: 240°C±5°C Immersion time: 3 s±1 s
8.5	Resistance to soldering heat	Appearance: No significant mechanical damage shall be observed. Inductance change rate: within ±10%	Flux: immersed in ethanol solution with a rosin content of 25(wt)% for 5 s to 10 s Solder: Sn-3.0Ag-0.5Cu solder Pre-heating: 150°C±10°C/1 min to 2 min Solder temperature: 270°C±5°C Immersion time: 10 s±1 s Post-treatment: left at a room condition for 24 h±2 h

9. Environmental Performance

The product is soldered on a glass-epoxy substrate for test.

No.	Item	Specification	Test method
9.1	Humidity	Appearance: No significant mechanical damage shall be observed. Inductance change rate: within ±10%	Temperature: 40°C±2°C Humidity: 90% (RH) to 95% (RH) Test time: 1000 h (+48 h, -0 h) Post-treatment: left at a room condition for 24 h±2 h
9.2	Heat life	Appearance: No significant mechanical damage shall be observed. Inductance change rate: within ±10%	Temperature: 85°C±2°C Applied current: Rated current specified in chapter 3 Test time: 1000 h (+48 h, -0 h) Post-treatment: left at a room condition for 24 h±2 h
9.3	Humidity load	Appearance: No significant mechanical damage shall be observed. Inductance change rate: within ±10%	Temperature: 40°C±2°C Humidity: 90% (RH) to 95% (RH) Applied current: Rated current specified in chapter 3 Test time: 1000 h (+48 h, -0 h) Post-treatment: left at a room condition for 24 h±2 h

No.	Item	Specification	Test method
9.4	Temperature cycle	Appearance: No significant mechanical damage shall be observed. Inductance change rate: within ±10%	Single cycle conditions: Step 1: -40°C (+0°C, -3°C)/30 min±3 min Step 2: ordinary temperature/2 min to 3 min Step 3: +85°C (+3°C, -0°C)/30 min±3 min Step 4: ordinary temperature/2 min to 3 min Number of testing: 10 cycles Post-treatment: left at a room condition for 24 h±2 h

10. Specification of Packaging

10.1 Appearance and dimensions of tape (8 mm width/paper tape)

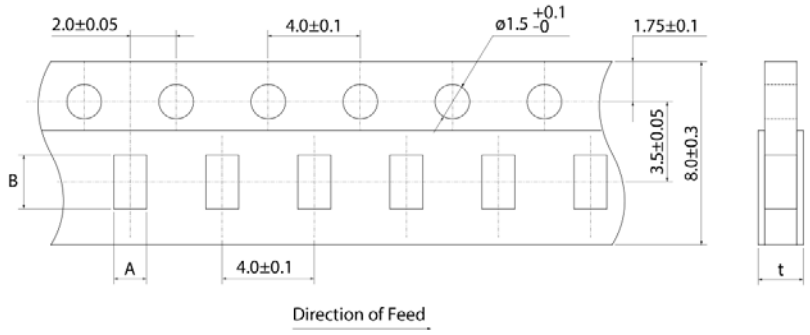

A	1.05±0.1
B	1.85±0.1
t	1.1 max.

(in mm)

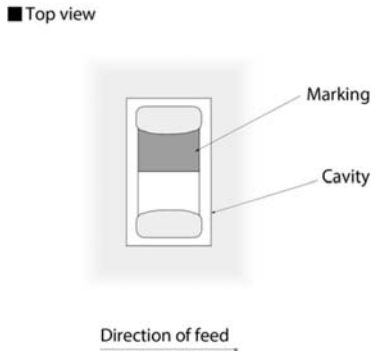

10.2 Taping specifications

Packing quantity (Standard quantity)	4000 pcs/reel
Packing method	The products are placed in cavities of a carrier tape and sealed by a cover tape (top tape and bottom tape when the cavities of the carrier tape are punched type).
Feed hole position	The feed holes on the carrier tape are on the right side when the cover tape (top tape when the cavities of the carrier tape are punched type) is pulled toward the user.
Joint	The carrier tape and cover tape (top tape when the cavities of the carrier tape are punched type) are seamless.
Number of missing products	Number of missing products within 0.025% of the number per reel or 1 pc., whichever is greater, and are not continuous. The specified quantity per reel is kept.

10.3 Break down force of tape

Cover tape (or top tape)	5 N min.
Bottom tape (only when the cavities of the carrier tape are punched type)	5 N min.

10.4 Peeling off force of tape

Speed of peeling off	300 mm/min
Peeling off force	0.1 N to 0.6 N (The lower limit is for typical value.)

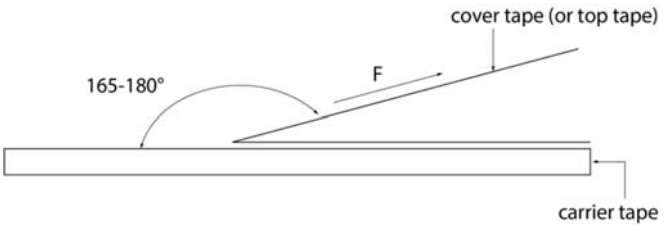

10.5 Dimensions of leader section, trailer section and reel

A vacant section is provided in the leader (start) section and trailer (end) section of the tape for the product. The leader section is further provided with an area consisting only of the cover tape (or top tape). (See the diagram below.)

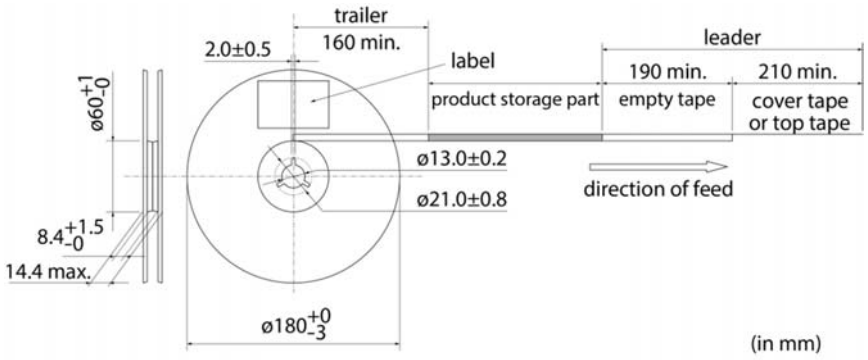

10.6 Marking for reel

Customer part number, Murata part number, inspection number (*1), RoHS marking (*2), quantity, etc.

*1 Expression of inspection No.: □□ ○○○○ ◇◇◇ (1) (2) (3)	(1) Factory code (2) Date First digit: year/last digit of year Second digit: month/Jan. to Sep.→1 to 9, Oct. to Dec.→O, N, D Third, Fourth digit: day (3) Serial No.
*2 Expression of RoHS marking: ROHS- Y (△) (1) (2)	(1) RoHS regulation conformity (2) Murata classification number

10.7 Marking on outer box (corrugated box)

Customer name, purchasing order number, customer part number, Murata part number, RoHS marking (*2), quantity, etc.

10.8 Specification of outer box

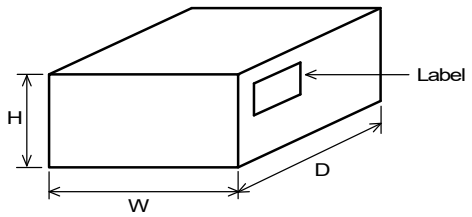

Dimensions of outer box (mm)			Standard reel quantity in outer box (reel)
W	D	H	
186	186	93	5
* Above outer box size is typical. It depends on a quantity of an order.			

11. ⚠Caution

11.1 Restricted applications

Please contact us before using our products for the applications listed below which require especially high reliability for the prevention of defects which might directly cause damage to the third party's life, body or property.

(1) Aircraft equipment
(2) Aerospace equipment
(3) Undersea equipment
(4) Power plant control equipment
(5) Medical equipment
(6) Transportation equipment (vehicles, trains, ships, etc.)
(7) Traffic signal equipment
(8) Disaster/crime prevention equipment
(9) Data-processing equipment
(10) Applications of similar complexity and/or reliability requirements to the applications listed in the above

11.2 Precautions on rating

Avoid using in exceeded the rated temperature range, rated voltage, or rated current.
Usage when the ratings are exceeded could lead to wire breakage, burning, or other serious fault.

11.3 Inrush current

If an inrush current (or pulse current or rush current) that significantly exceeds the rated current is applied to the product, overheating could occur, resulting in wire breakage, burning, or other serious fault.

12. Precautions for Use

This product is for use only with reflow soldering. It is designed to be mounted by soldering. If you want to use other mounting method, for example, using a conductive adhesive, please consult us beforehand.
Also, if repeatedly subjected to temperature cycles or other thermal stress, due to the difference in the coefficient of thermal expansion with the mounting substrate, the solder (solder fillet part) in the mounting part may crack.
The occurrence of cracks due to thermal stress is affected by the size of the land where mounted, the solder volume, and the heat dissipation of the mounting substrate. Carefully design it when a large change in ambient temperature is assumed.

12.1. Land dimensions

The following diagram shows the recommended land dimensions for reflow soldering:

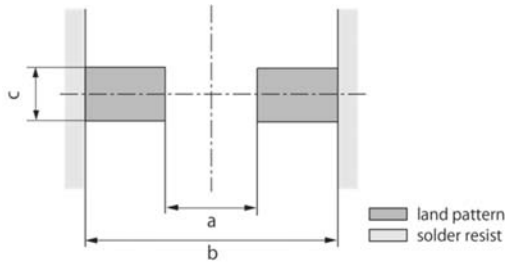

a	0.7
b	2.0
c	0.7

(in mm)

12.2 Flux and solder used

Flux	• Use a rosin-based flux. • Do not use a highly acidic flux with a halide content exceeding 0.2(wt)% (chlorine conversion value). • Do not use a water-soluble flux.
Solder	• Use Sn-3.0Ag-0.5Cu solder. • Standard thickness of solder paste: 100 μm to 150 μm

If you want to use a flux other than the above, please consult our technical department.

12.3 Soldering conditions (reflow)

- Pre-heating should be in such a way that the temperature difference between solder and product surface is limited to 150°C max.
  Cooling into solvent after soldering also should be in such a way that the temperature difference is limited to 100°C max.
  Insufficient pre-heating may cause cracks on the product, resulting in the deterioration of product quality.
- Standard soldering profile and the limit soldering profile is as follows.
  The excessive limit soldering conditions may cause leaching of the electrode and/or resulting in the deterioration of product quality.

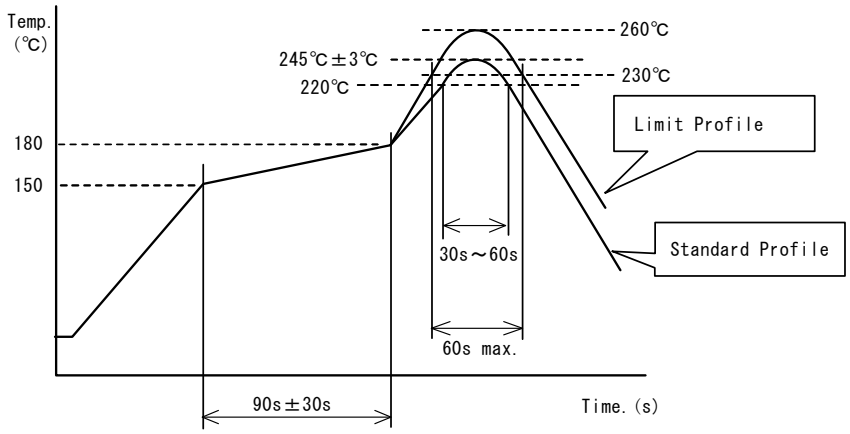

	Standard profile	Limit profile
Pre-heating	150°C to 180°C/90 s±30 s	150°C to 180°C/90 s±30 s
Heating	Above 220°C/30 s to 60 s	Above 230°C/60 s max.
Peak temperature	245°C±3°C	260°C/10 s
Number of reflow cycles	2 times	2 times

12.4 Reworking with soldering iron

The following requirements must be met to rework a soldered product using a soldering iron.

Item	Requirement
Pre-heating	150°C/approx. 1 min
Tip temperature of soldering iron	350°C max.
Power consumption of soldering iron	80 W max.
Tip diameter of soldering iron	ø3 mm max.
Soldering time	3 s (+1 s, -0 s)
Number of reworking operations	2 times max.
* Avoid a direct contact of the tip of the soldering iron with the product. Such a direction contact may cause cracks in the ceramic body due to thermal shock.	

12.5 Solder volume

Solder shall be used not to be exceeded the upper limits as shown below.

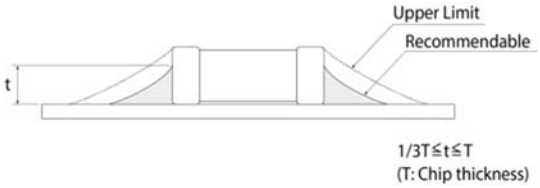

An increased solder volume increases mechanical stress on the product. Exceeding solder volume may cause the failure of mechanical or electrical performance.

12.6 Product's location

The following shall be considered when designing and laying out PCBs.

(1) PCB shall be designed so that products are not subject to mechanical stress due to warping the board.
[Products direction]
Products shall be located in the sideways direction (length: a < b) to the mechanical stress.

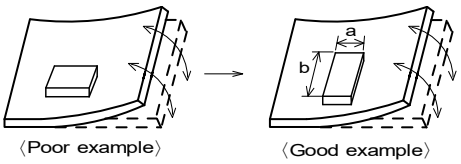

(2) Components location on PCB separation
It is effective to implement the following measures, to reduce stress in separating the board.
It is best to implement all of the following three measures; however, implement as many measures as possible to reduce stress.

Contents of measures	Stress level
(1) Turn the mounting direction of the component parallel to the board separation surface.	A > D*1
(2) Add slits in the board separation part.	A > B
(3) Keep the mounting position of the component away from the board separation surface.	A > C
*1 A > D is valid when stress is added vertically to the perforation as with hand separation. If a cutting disc is used, stress will be diagonal to the PCB, therefore A > D is invalid.	

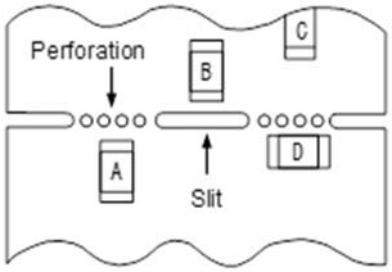

(3) Mounting components near screw holes
When a component is mounted near a screw hole, it may be affected by the board deflection that occurs during the tightening of the screw.
Mount the component in a position as far away from the screw holes as possible.

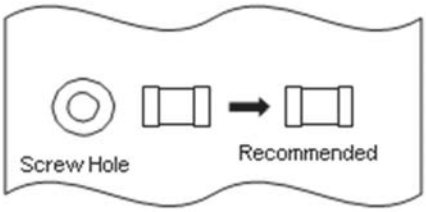

12.7 Handling of substrate

After mounting products on a substrate, do not apply any stress to the product caused by bending or twisting to the substrate when cropping the substrate, inserting and removing a connector from the substrate or tightening screw to the substrate. Excessive mechanical stress may cause cracking in the product.

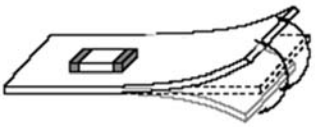

Bending

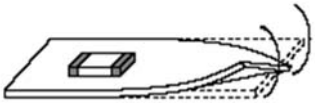

Twisting

12.8 Cleaning

The product shall be cleaned under the following conditions.

(1) The cleaning temperature shall be 60°C max. If isopropyl alcohol (IPA) is used, the cleaning temperature shall be 40°C max.

(2) Perform ultrasonic cleaning under the following conditions. Exercise caution to prevent resonance phenomenon in mounted products and the PCB.

Item	Requirement
Power	20 W/L max.
Time	5 min max.
Frequency	28 kHz to 40 kHz

(3) Cleaner
Alcohol-based cleaner: IPA
Aqueous agent: PINE ALPHA ST-100S

(4) There shall be no residual flux or residual cleaner. When using aqueous agent, rinse the product with deionized water adequately and completely dry it so that no cleaner is left.

* For other cleaning, consult our technical department.

12.9 Storage and transportation

Storage period	Use the product within 6 months after delivery. If you do not use the product for more than 6 months, check solderability before using it.
Storage conditions	• The products shall be stored in a room not subject to rapid changes in temperature and humidity. The recommended temperature range is -10°C to +40°C. The recommended relative humidity range is 15% to 85%. Keeping the product in corrosive gases, such as sulfur, chlorine gas or acid may cause the poor solderability. • Do not place the products directly on the floor; they should be placed on a palette so that they are not affected by humidity or dust. • Avoid keeping the products in a place exposed to direct sunlight, heat or vibration. • Do not keep products in bulk packaging. Bulk storage could result in collisions between the products or between the products and other parts, resulting in chipping or wire breakage. • Avoid storing the product by itself bare (i.e. exposed directly to air).
Transportation	Excessive vibration and impact reduces the reliability of the products. Exercise caution when handling the products.

12.10 Resin coating (including moisture-proof coating)

When the product is coated/molded with resin, its electrical characteristics may change.
A wire breakage issue may occur by mechanical stress caused by the resin, amount/cured shape of resin, or operating condition etc.
Some resins contain impurities or hydrolyzable chlorine, which could result in corrosion of the conducting materials, leading to wire breakage.
So, please pay your careful attention when you select resin in case of coating/molding the products with the resin.
Prior to use the coating resin, please make sure no reliability issue is observed by evaluating products mounted on your board.

12.11 Mounting conditions

Check the mounting condition before using.
Using mounting conditions (nozzles, equipment conditions, etc.) that are not suitable for products may lead to pick up errors, misalignment, or damage to the product.

12.12 Operating environment

Do not use this product under the following environmental conditions as it may cause deterioration of product quality.

(1) In the corrodible atmosphere such as acidic gases, alkaline gases, chlorine, sulfur gases, organic gases and etc. (the sea breeze, Cl_2, H_2S, NH_3, SO_2, NO_2, etc)

(2) In the atmosphere where liquid such as organic solvent, may splash on the products.

(3) In the atmosphere where the temperature/humidity changes rapidly and it is easy to dew.

12.13 Mounting density

If this product is placed near heat-generating products, be sure to implement sufficient heat-dissipating measures.
If this product is subjected to a significant amount of heat from other products, this could adversely affect product quality, resulting in a circuit malfunction or failure of the mounted section. Also, be sure that the product is used in a manner so that the heat that the product is subjected to from other products does not exceed the upper limit of the rated operating temperature for the product.

13. ⚠Note

(1) Please make sure that your product has been evaluated in view of your specifications with our product being mounted to your product.
(2) You are requested not to use our product deviating from the reference specifications.
(3) The contents of this reference specification are subject to change without advance notice.
Please approve our product specifications or transact the approval sheet for product specifications before ordering.

Appendix

Electrical performance: Measuring method for inductance/Q (Q measurement is applicable only when the Q value is included in the rating table.)
Perform measurement using the method described below. (Perform correction for the error deriving from the measuring terminal.)
(1) Residual elements and stray elements of the measuring terminal can be expressed by the F parameter for the 2-pole terminal as shown in the figure below.

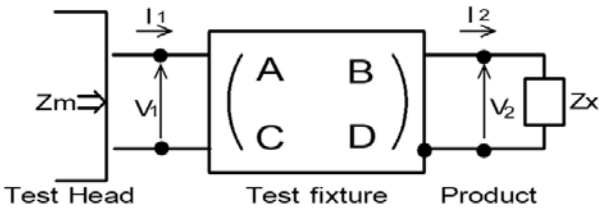

$$\begin{pmatrix} V_1 \\ I_1 \end{pmatrix} = \begin{pmatrix} A & B \\ C & D \end{pmatrix} \begin{pmatrix} V_2 \\ I_2 \end{pmatrix}$$

(2) The product's impedance value (Zx) and measured impedance value (Zm) can be expressed as shown below, by using the respective current and voltage for input/output.

$$Zm=\frac{V_1}{I_1} \qquad Zx=\frac{V_2}{I_2}$$

(3) Thus, the relationship between the product's impedance value (Zx) and measured impedance value (Zm) is as follows.

$Zx=\alpha\frac{Zm-\beta}{1-Zm\Gamma}$	Here, $\alpha = D/A = 1$ $\beta = B/D = Zsm - (1 - Yom\ Zsm)\ Zss$ $\Gamma = C/A = Yom$ Zsm: measured impedance of short chip Zss: residual impedance of short chip (0.771 nH) Yom: measured admittance when measuring terminal is open

(4) Calculate inductance Lx and Qx using the equations shown below.

$Lx=\frac{Im(Zx)}{2\pi f}$	Lx: inductance of chip coil Qx: Q of chip coil f: measuring frequency
$Qx=\frac{Im(Zx)}{Re(Zx)}$	

Looking for pricing, stock, or lifecycle information?

Click below to explore more details on WIN SOURCE:

- View LQG18HNR10J00D on WIN SOURCE
- Murata Electronics North America Information

Optimize Your Supply Chain with WIN SOURCE Solutions

- Global Sourcing Solution
- Obsolete Management
- Cost Control Management
- Shortage Management
- Alternative Solution
- Excess Inventory Management