THE DATASHEET OF

LIS352AXTR

www.win-source.net 0086-755-83957316

LIS352AX

MEMS inertial sensor: 3-axis ±2 *g* absolute analog-output "piccolo" accelerometer

Features

- Absolute 0-*g* level and sensitivity
- Excellent stability over temperature
- 3 acceleration channels plus multiplexed analog output
- Factory-trimmed device sensitivity and 0-*g* level
- Power-down mode
- Embedded self-test
- 10000 *g* high shock survivability
- ECOPACK® RoHS and “Green” compliant (see *Section 6*)

Applications

- Free-fall detection for data protection
- Tilting applications
- Mobile and battery-operated terminals
- Gaming and virtual reality input devices
- Anti-theft systems and Inertial navigation

Description

The LIS352AX is a new small size, low-power 3-axis linear accelerometer that includes a sensing element and an IC interface capable of providing an absolute analog signal to the external world.

The IC interface is manufactured using a CMOS process that allows a high level of integration to design a dedicated circuit trimmed to better match the sensing element characteristics.

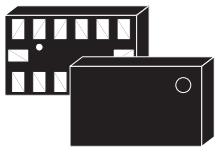

LGA-14 (3x5x0.9mm)

The LIS352AX has a full-scale of ±2 *g* and is capable of measuring accelerations over a maximum bandwidth of 2.0 kHz. The device bandwidth may be reduced by using external capacitors.

The self-test capability allows the user to check the functioning of the system.

An embedded multiplexer allows the redirection of the analog outputs onto a single pin for operation with a single-channel A/D converter.

ST is already in the field with several hundred million sensors which have received excellent acceptance from the market in terms of quality, reliability and performance.

The LIS352AX is provided in a plastic land grid array (LGA) package.

Several years ago ST successfully pioneered the use of this package for accelerometers. Today, ST has the widest manufacturing capability and strongest expertise in the world for production of sensors in plastic LGA packages.

Table 1. Device summary

Order code	Temperature range, °C	Package	Packing
LIS352AX	-40°C to +85°C	LGA-14	Tray
LIS352AXTR	-40°C to +85°C	LGA-14	Tape and reel

Contents

1 Block diagram and pin description 3

1.1 Pin connections and description 3

2 Mechanical and electrical specifications 5

2.1 Mechanical characteristics 5

2.2 Electrical characteristics 6

3 Absolute maximum ratings 7

3.1 Terminology 8

3.2 Sensitivity 8

3.3 Zero-g level 8

3.4 Self-test 8

3.5 Output impedance 8

4 Functionality 9

4.1 Sensing element 9

4.2 IC interface 9

4.3 Factory calibration 9

5 Application hints 10

5.1 Soldering information 11

5.2 Output response vs. orientation 12

6 Package information 13

7 Revision history 14

1 Block diagram and pin description

Figure 1. Block diagram

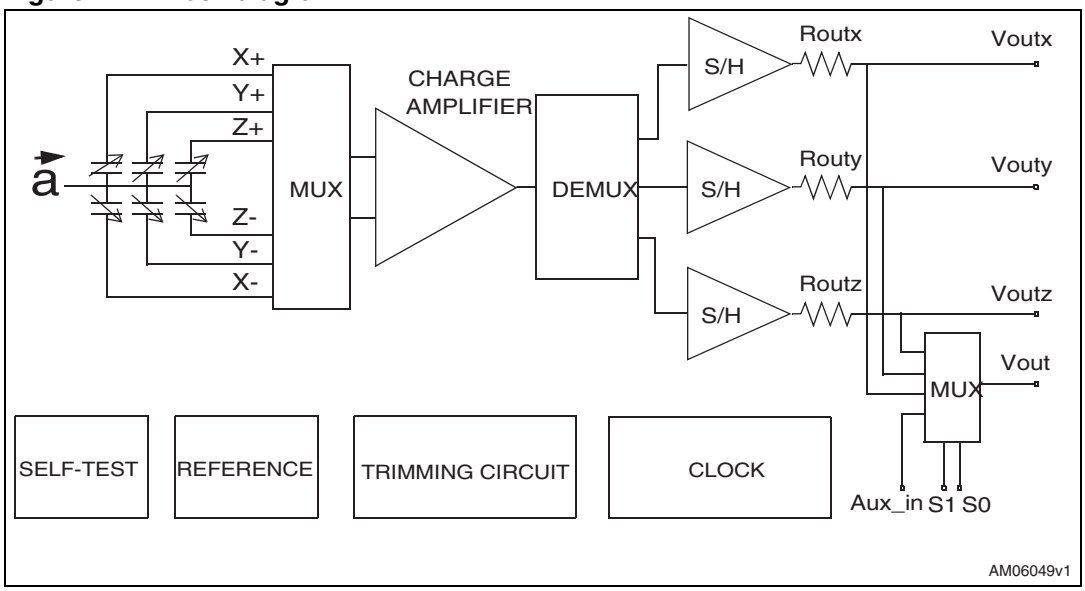

1.1 Pin connections and description

Figure 2. Pin connection

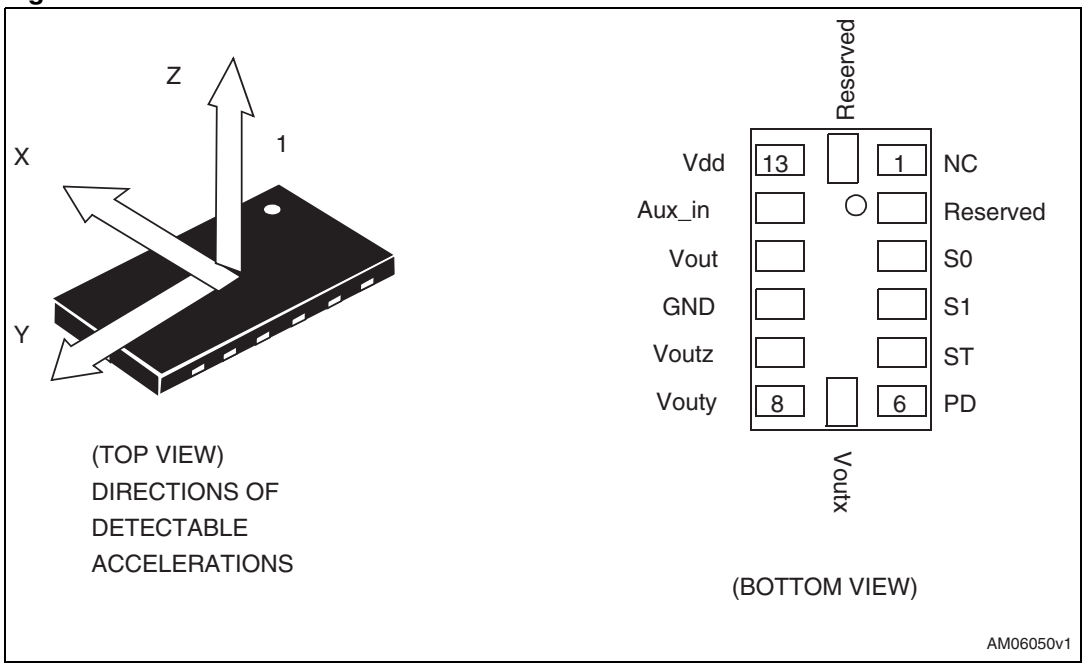

Table 2. Pin description

Pin #	Pin Name	Function
1	NC	Internally not connected
2	Reserved	Connect to Vdd
3	S0	Mux selector 0 (connect to Vdd or to GND)
4	S1	Mux selector 1 (connect to Vdd or to GND)
5	ST	Self-test (logic 0: normal mode; logic 1: self-test)
6	PD	Power-down (logic 0: normal mode; logic 1: power-down mode)
7	Voutx	Output voltage X channel
8	Vouty	Output voltage Y channel
9	Voutz	Output voltage Z channel
10	GND	0 V supply
11	Vout	Multiplexer output
12	Aux_in	Auxiliary input
13	Vdd	Power supply
14	Reserved	Connect to Vdd

2 Mechanical and electrical specifications

2.1 Mechanical characteristics

@ Vdd=3.3 V, T=25 °C unless otherwise noted[a]

Table 3. Mechanical characteristics

Symbol	Parameter	Test condition	Min.	Typ.[1]	Max.	Unit
Ar	Acceleration range[2]			±2.0		g
So	Sensitivity[3]		0.363 - 5%	0.363	0.363 + 5%	V/g
SoDr	Sensitivity change vs. temperature	Delta from +25 °C		±0.01		%/°C
Voff	Zero-*g* level[4]	T = 25°C	1.25- 3.5%	1.25	1.25+ 3.5%	V
OffDr	Zero-*g* level change vs temperature	Delta from +25 °C		±0.3		mg/°C
NL	Non linearity[4]	Best fit straight line		±0.5		% FS
CrossAx	Cross-axis[5]			±2		%
An	Acceleration noise density	Vdd=3.3 V		100		µg/√Hz
Vt	Self-test output voltage change[6]	T = 25 °C X axis	40		550	mV
		T = 25 °C Y axis	40		550	mV
		T = 25 °C Z axis	40		550	mV
Fres	Sensing element resonant frequency[7]	X, Y, Z axis	2.0			kHz
Top	Operating temperature range		-40		+85	°C
Wh	Product weight			30		mgram

1. Typical specifications are not guaranteed
2. Guaranteed by wafer level test and measurement of initial offset and sensitivity
3. Zero-*g* level and sensitivity are absolute to supply voltage
4. Guaranteed by design
5. Contribution to the measuring output of an inclination/acceleration along any perpendicular axis
6. Self-test output voltage change" is defined as $Vout_{(Vst=Logic1)}$-$Vout_{(Vst=Logic0)}$
7. Minimum resonance frequency F_{RES}=2.0 kHz. Sensor bandwidth=1/(2*π*32kΩ*C_{LOAD}), with C_{LOAD}>2.5nF

a. The product is factory calibrated at 3.3 V. The operational power supply range is specified in *Table 4*.

2.2 Electrical characteristics

@ Vdd=3.3 V, T=25 °C unless otherwise noted[b]

Table 4. Electrical characteristics

Symbol	Parameter	Test condition	Min.	Typ.[1]	Max.	Unit
Vdd	Supply voltage		2.16	3.3	3.6	V
Idd	Supply current	Mean value PD pin connected to GND		0.3		mA
IddPdn	Supply current in power-down mode	PD pin connected to Vdd		1		µA
Vst Vpd	Self-test input Power-down input	Logic 0 level	0		0.2*Vdd	V
		Logic 1 level	0.8*Vdd		Vdd	
Vs0	S0 Input	Logic 0 level	0		0.2*Vdd	
		Logic 1 level	0.8*Vdd		Vdd	
Vs1	S1 input	Logic 0 level	0		0.2*Vdd	
		Logic 1 level	0.8*Vdd		Vdd	
Rout	Output impedance of Voutx, Vouty, Voutz			32		kΩ
Cload	Capacitive load drive for Voutx, Vouty, Voutz[2]		2.5			nF
Rmux	Series resistance of multiplexer input vs. Vout			1		kΩ
Cloadmux	Capacitive load drive for multiplexed output Vout			10		pF
Ton	Turn-on time at exit from power-down mode	C_{LOAD} in µF		$160*C_{LOAD}+0.3$		ms

1. Typical specifications are not guaranteed
2. Minimum resonance frequency F_{RES}=2.0 kHz. Device bandwidth=1/(2*π*32kΩ*C_{LOAD}), with C_{LOAD}>2.5nF

b. The product is factory calibrated at 3.3 V. The operational power supply range is specified in *Table 3*.

3 Absolute maximum ratings

Stresses above those listed as “Absolute maximum ratings” may cause permanent damage to the device. This is a stress rating only and functional operation of the device under these conditions is not implied. Exposure to maximum rating conditions for extended periods may affect device reliability.

Table 5. Absolute maximum ratings

Symbol	Ratings	Maximum Value	Unit
Vdd	Supply voltage	-0.3 to 6	V
Vin	Input voltage on any control pin (PD, ST, S0, S1)	-0.3 to Vdd +0.3	V
V_{Aux_in}	Aux_in input voltage	-0.3 to Vdd +0.3	V
A_{POW}	Acceleration (any axis, powered, Vdd=3.3V)	3000 *g* for 0.5 ms	
		10000 *g* for 0.1 ms	
A_{UNP}	Acceleration (any axis, not powered)	3000 *g* for 0.5 ms	
		10000 *g* for 0.1 ms	
T_{STG}	Storage temperature range	-40 to +125	°C
ESD	Electrostatic discharge protection	4 (HBM)	kV
		1.5 (CDM)	kV
		200 (MM)	V

Note: Supply voltage on any pin should never exceed 6.0 V.

This is a mechanical shock sensitive device, improper handling can cause permanent damages to the part

This is an ESD sensitive device, improper handling can cause permanent damages to the part

3.1 Terminology

3.2 Sensitivity

Sensitivity describes the gain of the sensor and can be determined by applying 1 *g* acceleration to it. Because the sensor can measure DC accelerations, this can be done easily by pointing the selected axis towards the ground, noting the output value, rotating the sensor 180 degrees (pointing towards the sky) and noting the output value again. By doing so, a ±1 *g* acceleration is applied to the sensor. Subtracting the larger output value from the smaller one, and dividing the result by 2, produces the actual sensitivity of the sensor. This value changes very little over temperature (see sensitivity change vs. temperature) and over time. The sensitivity tolerance describes the range of sensitivities of a large number of sensors.

3.3 Zero-*g* level

Zero-*g* level describes the actual output signal if there is no acceleration present. A sensor in a steady state on a horizontal surface will measure 0 *g* on both the X and Y axes, whereas the Z axis will measure 1 *g*. A deviation from the ideal 0-*g* level (1250 mV, in this case) is called Zero-*g* offset. Offset is to some extent a result of stress to the MEMS sensor and therefore the offset can slightly change after mounting the sensor onto a printed circuit board or exposing it to extensive mechanical stress. Offset changes little over temperature (see “Zero-*g* level change vs. temperature” in *Table 3: Mechanical characteristics*). The Zero-*g* level of an individual sensor is also very stable over its lifetime. The Zero-*g* level tolerance describes the range of Zero-*g* levels of a group of sensors.

3.4 Self-test

Self-test (ST) provides a means of testing of the mechanical and electrical parts of the sensor, allowing the seismic mass to be moved by through an electrostatic test-force. The self-test function is off when the ST pin is connected to GND. When the ST pin is tied at Vdd, an actuation force is applied to the sensor, simulating a definite input acceleration. In this case the sensor outputs exhibits a voltage change in its DC levels. When ST is activated, the device output level is given by the algebraic sum of the signals produced by the acceleration acting on the sensor and by the electrostatic test-force. If the output signals change within the amplitude specified in *Table 3*, then the sensor is working properly and the parameters of the interface chip are within the defined specifications.

3.5 Output impedance

Output impedance describes the resistor inside the output stage of each channel. This resistor is part of a filter consisting of an external capacitor of at least 2.5 nF and the internal resistor. Due to the resistor level, only small inexpensive external capacitors are needed to generate low corner frequencies. When interfacing with an ADC, it is important to use high input impedance input circuitries to avoid measurement errors. Note that the minimum load capacitance forms a corner frequency close to the resonant frequency of the sensor. In general, the smallest possible bandwidth for a particular application should be chosen to obtain the best results.

4 Functionality

The LIS352AX is a 3-axis ultracompact low-power, analog output linear accelerometer packaged in a LGA package. The complete device includes a sensing element and an IC interface capable of taking information from the sensing element providing an analog signal to the external world.

4.1 Sensing element

A proprietary process is used to create a surface micro-machined accelerometer. The technology allows the creation of suspended silicon structures which are attached to the substrate at several points called “anchors” and are free to move in the direction of the sensed acceleration. To be compatible with traditional packaging techniques, a cap is placed on top of the sensing element to prevent blocking of the moving parts during the moulding phase of plastic encapsulation.

When an acceleration is applied to the sensor, the proof mass shifts from its nominal position, causing an imbalance in the capacitive half-bridge. This imbalance is measured using charge integration in response to a voltage pulse applied to the sense capacitor.

At steady state, the nominal value of the capacitors are a few pF, and when an acceleration is applied the maximum variation of the capacitive load is in the fF range.

4.2 IC interface

The complete signal processing utilizes a fully differential structure, while the final stage converts the differential signal into a single-ended signal to be compatible with external applications.

The first stage is a low-noise capacitive amplifier that implements a correlated double sampling (CDS) at its output to cancel the offset and the 1/f noise. The signal produced is then sent to three different S&Hs, one for each channel, and made available to the outside.

The device provides an embedded multiplexer to allow the redirection of either the analog output signals Voutx, Vouty, and Voutz, or of an auxiliary input signal onto a single pin for operation with a single-channel A/D converter.

All the analog parameters (output offset voltage and sensitivity) are absolute with respect to the voltage supply. Increasing or decreasing the voltage supply will not cause a change in the sensitivity and the offset. The feature allows the coupling of the sensor with an ADC, having a fixed voltage reference independent from Vdd.

4.3 Factory calibration

The IC interface is factory calibrated for sensitivity (So) and zero-g level (Voff).
The trimming values are stored inside the device in a non volatile structure. Any time the device is turned on, the trimming parameters are downloaded into the registers to be employed during the normal operation. This allows the user to employ the device without further calibration.

5 Application hints

Figure 3. LIS352AX electrical connection

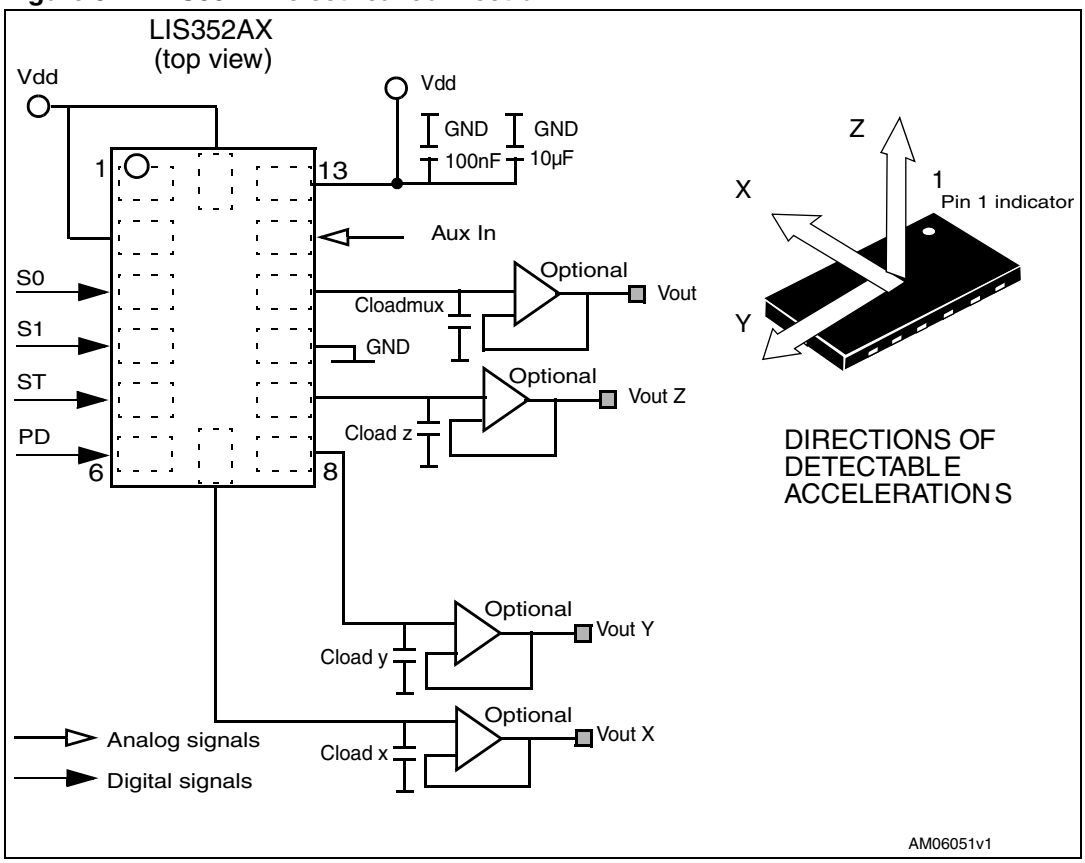

Power supply decoupling capacitors (100 nF ceramic or polyester + 10 µF aluminum) should be placed as near as possible to the device (common design practice).

The LIS352AX allows band limiting of Voutx, Vouty and Voutz through the use of external capacitors. The recommended frequency range spans from DC up to 2.0 kHz. Capacitors must be added at the output pins to implement low-pass filtering for anti-aliasing and noise reduction, even if only the multiplexed output (Vout) is used. The equation for the cut-off frequency (f_t) of the external filters is:

$$f_t = \frac{1}{2\pi \cdot R_{out} \cdot C_{load}(x, y, z)}$$

Taking into account that the internal filtering resistor (R_{out}) has a nominal value of 32 kΩ, the equation for the external filter cut-off frequency may be simplified as follows:

$$f_t = \frac{5\mu F}{C_{load}(x, y, z)} [Hz]$$

The tolerance of the internal resistor can vary ±20% (typ) from its nominal value of 32 kΩ; thus the cut-off frequency will vary accordingly. A minimum capacitance of 2.5 nF for C_{LOAD} (x, y, z) is required.

An external capacitor can be added to the Vout pin. Values below 10 pF are recommended.

Table 6. Filter capacitor selection, C_{LOAD} (x,y,z)

Cut-off frequency	Capacitor value
1 Hz	5 µF
10 Hz	0.5µF
20 Hz	250nF
50 Hz	100nF
100 Hz	50nF
200 Hz	25nF
500 Hz	10nF

Table 7. MUX I/O table

S1 pin	S0 pin	MUX status
0	0	Vout=Voutx
0	1	Vout=Vouty
1	0	Vout=Voutz
1	1	Vout=Aux_in

5.1 Soldering information

The LGA package is compliant with the ECOPACK®, RoHs and “Green” standard.
It is qualified for soldering heat resistance according to JEDEC J-STD-020C.

Leave “pin 1 Indicator” unconnected during soldering.

Land pattern and soldering recommendations are available at www.st.com.

5.2 Output response vs. orientation

Figure 4. Output response vs. orientation

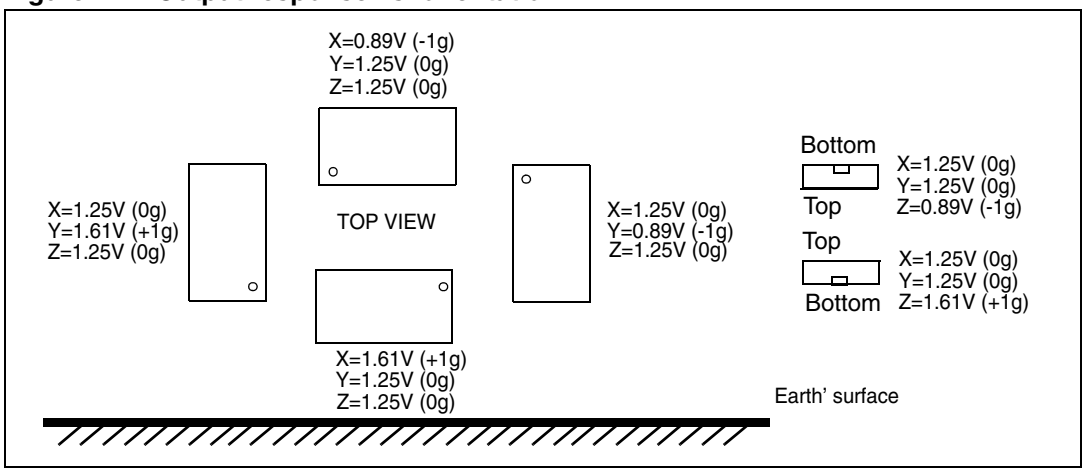

6 Package information

In order to meet environmental requirements, ST offers these devices in different grades of ECOPACK® packages, depending on their level of environmental compliance. ECOPACK® specifications, grade definitions and product status are available at: www.st.com. ECOPACK® is an ST trademark.

Figure 5. LGA-14: mechanical data and package dimensions

Dimensions						
Ref.	mm			inch		
	Min.	Typ.	Max.	Min.	Typ.	Max.
A1		0.90	1	0.033	0.035	0.037
A2			0.7			0.027
A3	0.16	0.2	0.24	0.006	0.007	0.009
D1	2.85	3	3.15	0.116	0.118	0.120
E1	4.85	5	5.15	0.194	0.196	0.198
N1		0.8			0.031	
L1		4			0.157	
P1		1.34			0.052	
P2		1.2			0.047	0.048
T1		0.8			0.031	
T2		0.5			0.019	
d		0.15			0.005	
M		0.1			0.003	
k		0.05			0.002	

Outline and mechanical data

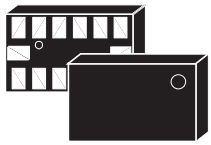

LGA-14 (3x5x0.9mm)
pitch 0.8mm
Land Grid Array Package

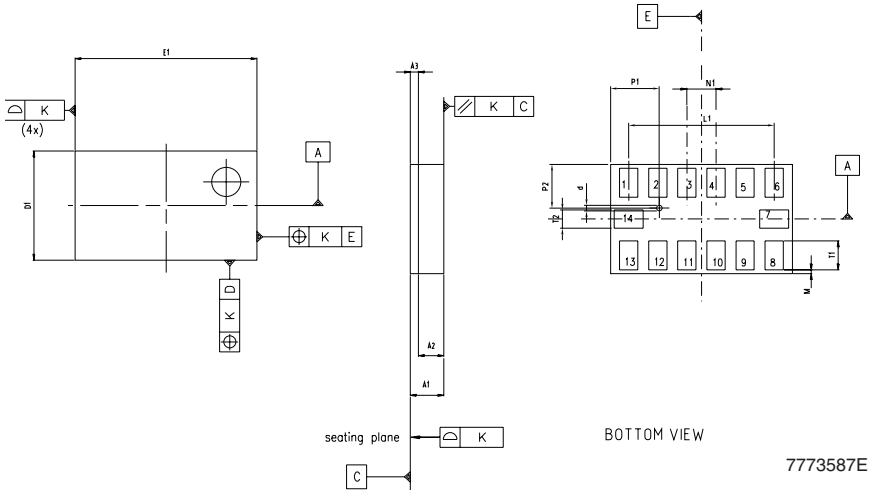

7 Revision history

Table 8. Document revision history

Date	Revision	Changes
26-Mar-2009	1	Initial datasheet
02-Feb-2009	2	Updated *Section 2.1: Mechanical characteristics* and *Section 2.2: Electrical characteristics*. Minor text changes

Please Read Carefully:

Information in this document is provided solely in connection with ST products. STMicroelectronics NV and its subsidiaries (“ST”) reserve the right to make changes, corrections, modifications or improvements, to this document, and the products and services described herein at any time, without notice.

All ST products are sold pursuant to ST’s terms and conditions of sale.

Purchasers are solely responsible for the choice, selection and use of the ST products and services described herein, and ST assumes no liability whatsoever relating to the choice, selection or use of the ST products and services described herein.

No license, express or implied, by estoppel or otherwise, to any intellectual property rights is granted under this document. If any part of this document refers to any third party products or services it shall not be deemed a license grant by ST for the use of such third party products or services, or any intellectual property contained therein or considered as a warranty covering the use in any manner whatsoever of such third party products or services or any intellectual property contained therein.

UNLESS OTHERWISE SET FORTH IN ST’S TERMS AND CONDITIONS OF SALE ST DISCLAIMS ANY EXPRESS OR IMPLIED WARRANTY WITH RESPECT TO THE USE AND/OR SALE OF ST PRODUCTS INCLUDING WITHOUT LIMITATION IMPLIED WARRANTIES OF MERCHANTABILITY, FITNESS FOR A PARTICULAR PURPOSE (AND THEIR EQUIVALENTS UNDER THE LAWS OF ANY JURISDICTION), OR INFRINGEMENT OF ANY PATENT, COPYRIGHT OR OTHER INTELLECTUAL PROPERTY RIGHT.

UNLESS EXPRESSLY APPROVED IN WRITING BY AN AUTHORIZED ST REPRESENTATIVE, ST PRODUCTS ARE NOT RECOMMENDED, AUTHORIZED OR WARRANTED FOR USE IN MILITARY, AIR CRAFT, SPACE, LIFE SAVING, OR LIFE SUSTAINING APPLICATIONS, NOR IN PRODUCTS OR SYSTEMS WHERE FAILURE OR MALFUNCTION MAY RESULT IN PERSONAL INJURY, DEATH, OR SEVERE PROPERTY OR ENVIRONMENTAL DAMAGE. ST PRODUCTS WHICH ARE NOT SPECIFIED AS "AUTOMOTIVE GRADE" MAY ONLY BE USED IN AUTOMOTIVE APPLICATIONS AT USER’S OWN RISK.

Resale of ST products with provisions different from the statements and/or technical features set forth in this document shall immediately void any warranty granted by ST for the ST product or service described herein and shall not create or extend in any manner whatsoever, any liability of ST.

ST and the ST logo are trademarks or registered trademarks of ST in various countries.

Information in this document supersedes and replaces all information previously supplied.

The ST logo is a registered trademark of STMicroelectronics. All other names are the property of their respective owners.

© 2010 STMicroelectronics - All rights reserved

STMicroelectronics group of companies

Australia - Belgium - Brazil - Canada - China - Czech Republic - Finland - France - Germany - Hong Kong - India - Israel - Italy - Japan - Malaysia - Malta - Morocco - Philippines - Singapore - Spain - Sweden - Switzerland - United Kingdom - United States of America

www.st.com

Looking for pricing, stock, or lifecycle information?

Click below to explore more details on WIN SOURCE:

- View LIS352AXTR on WIN SOURCE
- STMicroelectronics Information

Optimize Your Supply Chain with WIN SOURCE Solutions

- Global Sourcing Solution
- Obsolete Management
- Cost Control Management
- Shortage Management
- Alternative Solution
- Excess Inventory Management