PCA9460

13-channel power management integrated circuit (PMIC) for ultra-low power applications

Rev. 3.6 — 14 October 2025 Product data sheet

1 General description

The PCA9460 is a single chip PMIC designed to support ultra-low-power applications where standby power and overall power consumption of power management IC is critical. The PCA9460 is designed to be paired with i.MX 8ULP processor which enables such key applications. It provides power supply solutions for low power wearable application where size and efficiency are critical.

The PCA9460 comes equipped with four buck regulators, five LDOs and additional load switches. This design offers the most flexible configuration for i.MX 8ULP or other processors to enable the ultra-low-power system design. Each buck regulator has been designed with ultra-low Iq current to reduce standby current. Two buck regulators support smart Dynamic voltage scaling (DVS), which allows the system designed to set the right voltage on the processors the PCA9460 is powering. This process minimize power consumption that is controlled through the PMIC_STBY_REQ pin or MODE[2:0] pins. Five LDOs have 300 nA low quiescent current. One LDO is available for SNVS core power supply, one 250 mA LDO is to regulate to low output voltage from buck regulator output. Three 250 mA LDOs supply power to the processor and peripheral devices. Four 150 mΩ load switches switch power for peripheral devices. These switches can be configured as an LED driver with two different blink modes.

The PCA9460 is offered in a 42-bump wafer-level CSP package, 2.86 mm x 2.46 mm, 0.4 mm pitch.

2 Features and benefits

Ultra-low-power system design for long battery life or green offline performance using:

- Four buck regulators
  - Two 1 A buck regulators
  - Two 1 A buck regulator with DVS
  - Low Iq (1.5 µA at low power mode, 5.5 µA at normal mode)
- Five linear regulators
  - One 250 mA NMOS LDO
  - Three 250 mA PMOS LDO
  - 10 mA SNVS LDO
  - Built-in active discharge resistor
- Four load switches with active discharge resistor to allow easy connect/disconnect of multiple system rails
  - 150 mΩ Rdson
  - ON/OFF control in different modes
  - Configurable to LED driver with two blink patterns
- Power control IO for intelligent system design
  - Power ON/OFF control
  - Standby/Run mode control
  - Smart DVS control
- Flexible power ON/OFF sequence

- Fm+ 1 MHz I^2C Interface allows continuous communication with the host
- ESD protection
  - Human body model (HBM) : ± 2000 V
  - Charged device model (CDM) : ± 500 V
- 7 x 6 bump array, 0.4 mm pitch, WL-CSP, 2.86 mm x 2.46 mm enables a small solution size

3 Applications

- Ultra-low-power portable devices
  - eReader
  - Tablet
  - Watch
  - Portable headset
  - Handheld printer/scanner
  - Bike computer

4 Ordering information

Table 1. Ordering Information

Part number	Orderable part number	Topside marking	Temperature range (T_{amb})	Processor and DDR memory platform	Package		
					Name	Description	Version
PCA9460AUK	PCA9460AUKZ [1]	N9460A	–40 °C to +85 °C	Ideal for i.MX 8ULP + LPDDR4	WLCSP42	Wafer level chip scale package, 42 terminals, 0.4 mm pitch, 2.86 mm x 2.46 mm x 0.525 mm body (backside coating included), A1 silicon	SOT1459-7
PCA9460BUK	PCA9460BUKZ [1]	N9460B	–40 °C to +85 °C	Ideal for i.MX 8ULP + LPDDR4X	WLCSP42	Wafer level chip scale package, 42 terminals, 0.4 mm pitch, 2.86 mm x 2.46 mm x 0.525 mm body (backside coating included), A1 silicon	SOT1459-7
PCA9460CUK	PCA9460CUKZ [1]	N9460C	–40 °C to +85 °C	Ideal for i.MX 8ULP + LPDDR3	WLCSP42	Wafer level chip scale package, 42 terminals, 0.4 mm pitch, 2.86 mm x 2.46 mm x 0.525 mm body (backside coating included), A1 silicon	SOT1459-7
PCA9460AAUK	PCA9460AAUKZ	N9460AA	–40 °C to +85 °C	Ideal for i.MX 8ULP + LPDDR4	WLCSP42	Wafer level chip scale package, 42 terminals, 0.4 mm pitch, 2.86 mm x 2.46 mm x 0.525 mm body (backside coating included), A2 silicon	SOT1459-7
PCA9460BAUK	PCA9460BAUKZ	N9460BA	–40 °C to +85 °C	Ideal for i.MX 8ULP + LPDDR4X	WLCSP42	Wafer level chip scale package, 42 terminals, 0.4 mm pitch, 2.86 mm x 2.46 mm x 0.525 mm body (backside coating included), A2 silicon	SOT1459-7
PCA9460CAUK	PCA9460CAUKZ	N9460CA	–40 °C to +85 °C	Ideal for i.MX 8ULP + LPDDR3	WLCSP42	Wafer level chip scale package, 42 terminals, 0.4 mm pitch, 2.86 mm x 2.46 mm x 0.525 mm body (backside coating included), A2 silicon	SOT1459-7

[1] This device is subject to the PCA9460 Errata (ES_PCA9460 Rev. 1.0), which documents a known behavior related to improper power-up when residual voltage is present on the VSYS rail. Consult the errata document for a detailed description of the behavior and applicable workarounds.

All information provided in this document is subject to legal disclaimers.

© 2025 NXP B.V. All rights reserved.

5 Internal block diagram

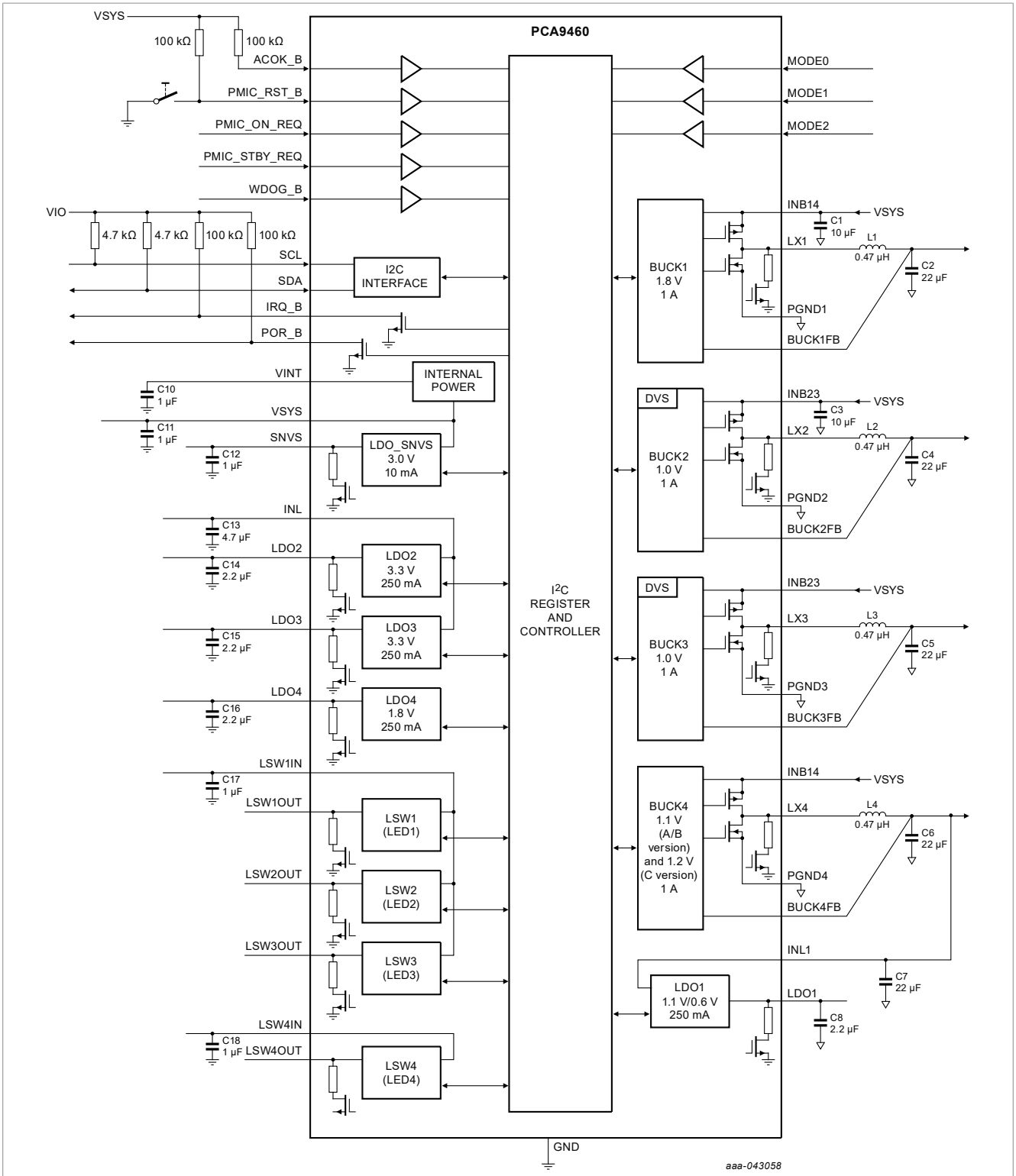

Figure 1. Block diagram

All information provided in this document is subject to legal disclaimers.

© 2025 NXP B.V. All rights reserved.

6 Pinning information

6.1 Pinning

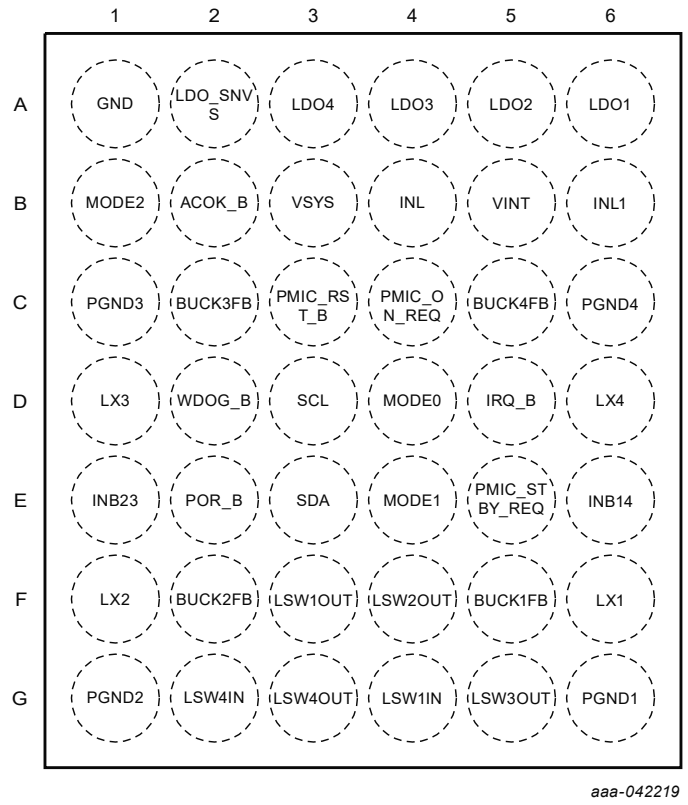

Figure 2. PCA9460 pin map – top view (bump-side down)

6.2 Pin description

Table 2. Pin description

Symbol	Pin	Type	Description
MODE0	D4	DI	Digital MODE0 input pin
MODE1	E4	DI	Digital MODE1 input pin
MODE2	B1	DI	Digital MODE2 input pin
ACOK_B	B2	DI	PMIC ON signal
PMIC_RST_B	C3	DI	PMIC reset input pin. Once it is asserted low, PMIC performs cold reset.
POR_B	E2	DO	Power On reset output pin. Open drain output requiring external pull up resistor.
PMIC_ON_REQ	C4	DI	PMIC ON input from Application processor. When it is asserted high, the device starts power on sequence.
PMIC_STBY_REQ	E5	DI	Standby mode input from Application processor. When it is asserted high, device enters STANDBY mode.
SCL	D3	DI	I^2C serial clock pin
SDA	E3	DIO	I^2C serial data pin
WDOG_B	D2	DI	Watchdog reset input from application processor

All information provided in this document is subject to legal disclaimers.

© 2025 NXP B.V. All rights reserved.

Table 2. Pin description...*continued*

Symbol	Pin	Type	Description
IRQ_B	D5	DO	PMIC interrupt pin, Open drain output requiring external pull up resistor
INB14	E6	P	Buck 1 / Buck 4 input pin, bypass with 10 µF
LX1	F6	P	Buck 1 switching node
PGND1	G6	P	Buck 1 Power ground
BUCK1FB	F5	AI	Buck 1 feedback pin
INB23	E1	P	Buck 2 / Buck 3 input pin, bypass with 10 µF
LX2	F1	P	Buck 2 switching node
PGND2	G1	P	Buck 2 Power ground
BUCK2FB	F2	AI	Buck 2 feedback pin
LX3	D1	P	Buck 3 switching node
PGND3	C1	P	Buck 3 Power ground
BUCK3FB	C2	AI	Buck 3 feedback pin
LX4	D6	P	Buck 4 switching node
PGND4	C6	P	Buck 4 Power ground
BUCK4FB	C5	AI	Buck 4 feedback pin
VSYS	B3	P	Internal power input. Bypass with a 1 µF to Ground
LDO_SNVS	A2	P	LDO_SNVS output pin, bypass with 1 µF to Ground
INL	B4	P	LDO2/LDO3/LDO4 power input pins, bypass with a 4.7 µF to Ground
LDO2	A5	P	LDO2 output. Bypass with a 2.2 µF to Ground
LDO3	A4	P	LDO3 output. Bypass with a 2.2 µF to Ground
LDO4	A3	P	LDO4 output. Bypass with a 2.2 µF to Ground
INL1	B6	P	LDO1 input pins, bypass with a .2.2 µF to Ground
LDO1	A6	P	LDO1 output. Bypass with a 2.2 µF to Ground
LSW1IN	G4	P	Load switch input pin. Bypass with 1 µF to Ground
LSW1OUT	F3	P	Load switch output pin, if LSW1 is configured to LED driver, LSW1OUT is current source for LED
LSW2OUT	F4	P	Load switch output pin. if LSW2 is configured to LED driver, LSW2OUT is current source for LED
LSW3OUT	G5	P	Load switch output pin. if LSW3 is configured to LED driver, LSW3OUT is current source for LED driver
LSW4IN	G2	P	Load switch input pin. Bypass with 1 µF to Ground
LSW4OUT	G3	P	Load switch output pin. if LSW4 is configured to LED driver, LSW4OUT is current source for LED
VINT	B5	P	Internal power supply output, bypass with 1 µF to GND
GND	A1	P	Analog ground pin

All information provided in this document is subject to legal disclaimers.

© 2025 NXP B.V. All rights reserved.

7 Functional description

7.1 Features

The PCA9460 is a PMIC designed to be the primary power management for NXP processors, 8ULP.

- Four buck regulators
  - Two 1A buck regulators
  - Two 1A buck regulator with DVS
  - Built-in active discharge resistor
  - Low Iq (1.5 µA at low power mode, 5.5 µA at normal mode)
- Five linear regulators
  - One 250 mA NMOS LDO
  - Three 250 mA PMOS LDO
  - Built-in active discharge resistor
  - 10 mA SNVS LDO
- Four load switches with active discharge resistor
  - 150 mΩ Rdson
  - ON/OFF control in different modes
  - Configurable to LED driver with two blink patterns
- Power control IO
  - Power ON/OFF control
  - Standby/Run mode control
  - Smart DVS control
- Flexible power ON/OFF sequence
- Fm+ 1 MHz I^2C Interface
- ESD protection
  - Human body model (HBM) : +/- 2000 V
  - Charged device model (CDM) : +/-500 V
- 6 x 7 bump array, 0.4 mm pitch, WL-CSP, 2.86 mm x 2.46 mm

All information provided in this document is subject to legal disclaimers.

© 2025 NXP B.V. All rights reserved.

7.2 Functional diagram

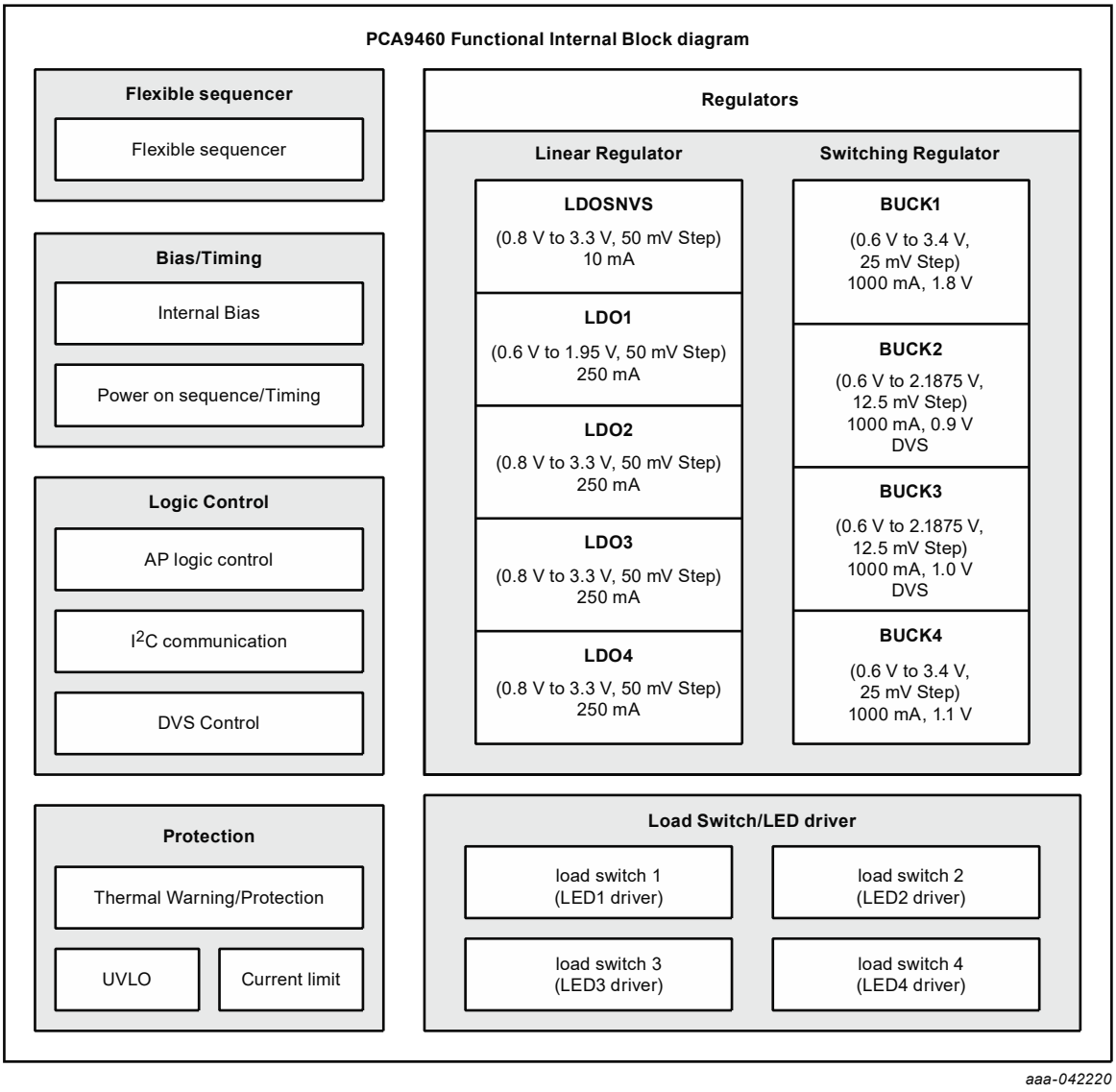

Figure 3. PCA9460 functional block diagram

© 2025 NXP B.V. All rights reserved.

7.3 PCA9460 version

The PCA9460 can be configured to each regulator default voltage and start-up sequence from the internal OTP configuration. Table 3 shows each OTP configuration for all devices.

Table 3. OTP configuration

PCA9460A = i.MX 8ULP + LPDDR4; PCA9460B = i.MX 8ULP + LPDDR4X; PCA9460C = i.MX 8ULP + LPDDR3

Address	Register	PCA9460A	PCA9460B	PCA9460C	Description
0x01	OTP_VER	0x02	0x11	0x21	PCA9460A - Rev. 2 ; PCA9460B - Rev. 1 ; PCA9460C - Rev. 1
0x0A	PWR_SEQ_CTRL	0x06			2 ms TON_STEP & 8 ms TOFF_STEP
0x0C	SYS_CFG2	0x71			2 sec ONKEY timer; Normal Power Mode; 2.85 V VSYS UVLO
0x10	BUCK1CTRL	0x39			Normal mode; Enable Active Discharge Resistor ; Buck 1 ON at RUN state
0x11	BUCK1OUT	0x30			1.8 V
0x14	BUCK2CTRL	0x79			25 mV/2 µs DVS speed; Normal mode; Enable Active Discharge Resistor; Buck 2 ON at RUN state
0x15	BUCK2OUT_DVS0	0x20			1.0 V
0x1F	BUCK2OUT_MAX_LIMIT	0x38			1.3 V
0x21	BUCK3CTRL	0x79			25 mV/2 µs DVS speed; Normal mode; Enable Active Discharge Resistor; Buck 3 ON at RUN state
0x22	BUCK3OUT_DVS0	0x20			1.0 V
0x2C	BUCK3OUT_MAX_LIMIT	0x38			1.3 V
0x2E	BUCK4CTRL	0x39			Normal mode; Enable Active Discharge Resistor ; Buck 4 ON at RUN state
0x2F	BUCK4OUT	0x14		0x18	PCA9460A & PCA9460B = 1.1 V ; PCA9460C = 1.2 V
0x30	LDO1_CFG	0x9D			LDO1 Auto Cout; 15 mΩ out trace compensation; Normal mode; LDO1 ON at RUN state
0x31	LDO1_OUT	0x8A	0x80	0x8C	PCA9460A = 1.1 V ; PCA9460B = 0.6 V ; PCA9460C = 1.2 V
0x32	LDO2_CFG	0x11			Enable Active Discharge Resistor ; LDO2 ON at RUN state
0x33	LDO2_OUT_L	0x32			3.3 V on LDO2 when LDO2_VSEL = Low
0x35	LDO3_CFG	0x11			Enable Active Discharge Resistor ; LDO3 ON at RUN state
0x36	LDO3_OUT	0x32			3.3 V
0x37	LDO4_CFG	0x11			Enable Active Discharge Resistor ; LDO4 ON at RUN state
0x38	LDO4_OUT	0x14			1.8 V
0x39	LDOSNVS_CGF	0xEC			Enable Active Discharge Resistor ; Always ON mode ; 3.0 V output
0x40	LSW1_CTRL	0x11			Load Switch mode; Enable Active Discharge; Load SW1 ON at RUN State
0x41	LSW2_CTRL	0x11			Load Switch mode; Enable Active Discharge; Load SW2 ON at RUN State
0x42	LSW3_CTRL	0x11			Load Switch mode; Enable Active Discharge; Load SW3 ON at RUN State
0x43	LSW4_CTRL	0x11			Load Switch mode; Enable Active Discharge; Load SW4 ON at RUN State

All information provided in this document is subject to legal disclaimers.

© 2025 NXP B.V. All rights reserved.

7.4 Power states

PCA9460 has six power states: OFF, SNVS, RUN, PWRDN, PWRUP and FAULT_SD. Figure 4 shows the state transition diagram showing the conditions to enter and exit each state.

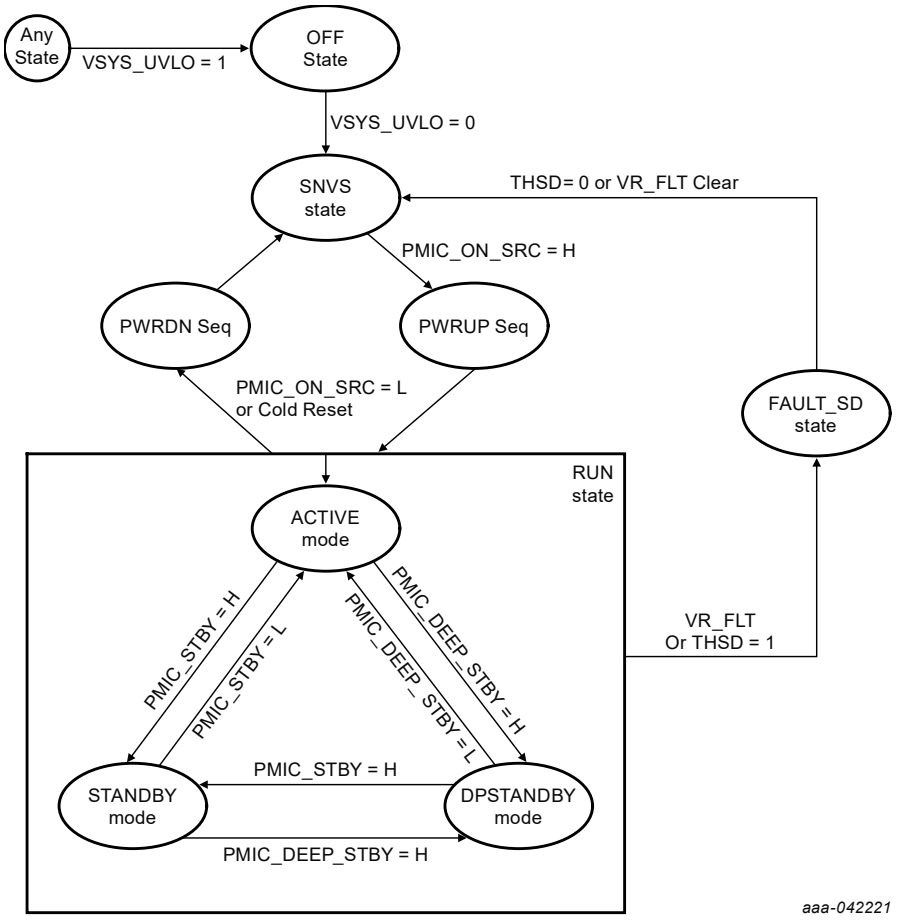

Figure 4. Power states diagram

7.4.1 Off state

PCA9460 enters OFF state from any state when VSYS falls below V_{SYS_UVLO} threshold. All regulators including LDO_SNVS are off, and all registers get reset in the state.

7.4.2 SNVS state

PCA9460 enters SNVS (Secure non-volatile storage mode) when VSYS exceeds VSYS_UVLO rising threshold. LDO_SNVS is turned on within t_{SNVS}. After turning LDO_SNVS on, it monitors power on source signals to move to PWRUP state.

All information provided in this document is subject to legal disclaimers.

© 2025 NXP B.V. All rights reserved.

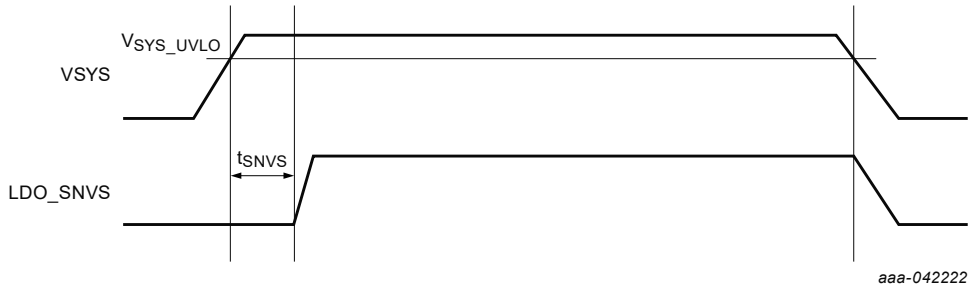

Figure 5. SNVS state ON/OFF sequence

Table 4. SNVS state

Time	Description	Value	Comment
t_{SNVS}	Maximum time to enable LDO_SNVS from VSYS UVLO detected	20 ms	

7.4.3 PWRUP state

7.4.3.1 Power ON sources

When internal signal, PMIC_ON_SRC, is asserted high in SNVS state, it starts powering up regulators with pre-defined power ON sequence. PMIC_ON_SRC signal is generated by below three signals.

- PMIC_ON_REQ after its debounce time
- PMIC_RST_B after its ONKEY debounce time. (It can be masked in PWR_SEQ_CTRL register)
- ACOK_B after its debounce time → OTP option to be disabled. (It can be masked in PWR_SEQ_CTRL register)

Figure 6 show the block diagram how PMIC_ON_SRC is generated.

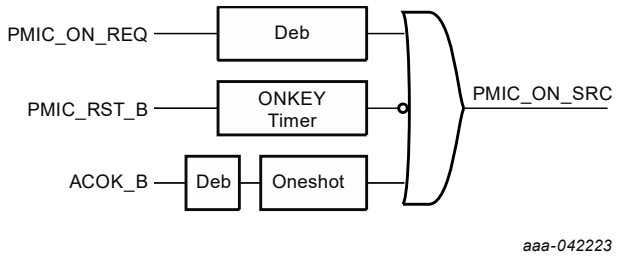

Figure 6. PCA9460 power on source

When ACOK_B signal is configured as Power on source in PWR_SEQ_CTRL register, One shot signal is generated from the falling edge of ACOK_B and the signal is maintained high for $t_{ACOK_B_Oneshot}$. If PMIC_ON_REQ pin is asserted high before one shot timer is expired, PMIC is kept powered on. If not, PCA9460 takes power-off sequence after one shot timer.

ACOKB_S status bit in INT1_STATUS register is updated after its debounce timer, $t_{ACOK_B_DEB}$.

All information provided in this document is subject to legal disclaimers.

© 2025 NXP B.V. All rights reserved.

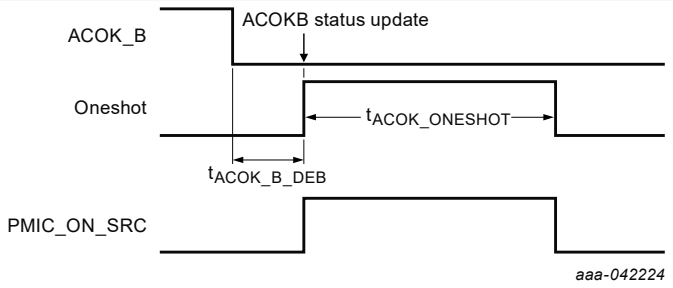

Figure 7. ACOK_B timing

PMIC_RST_B pin is used to turn on PCA9460 at SNVS state or to make PMIC reset at RUN state after detecting PMIC_RST_B falling edge. PMIC_RSTB_S status bit in INT1 STATUS register is updated in debounce time, $t_{DEB_PMIC_RST_B}$, after falling edge detection.

When PMIC_RST_B falls low at SNVS state, then it starts counting timer. After ONKEY timer expired, ONKEY_S status bit is updated and PMIC_ON_SRC signal is generated if PMIC_RST_B pin is configured to power on source in PWR_SEQ_CTRL register. PMIC_ON_SRC is generated by PMIC_RST_B pin only when PCA9460 is in SNVS state. If ONKEY timer is expired at RUN state, only ONKEY_S bit is updated.

When PMIC_RST_B pin falls low at RUN state and RESETKEY timer is expired, RESETKEY_S status bit is updated and perform reset function configured in RESET_CTRL register after t_{RESET_WAIT}, which is for AP to determine to proceed reset or not. For detail reset behavior, refer to Section 7.5.

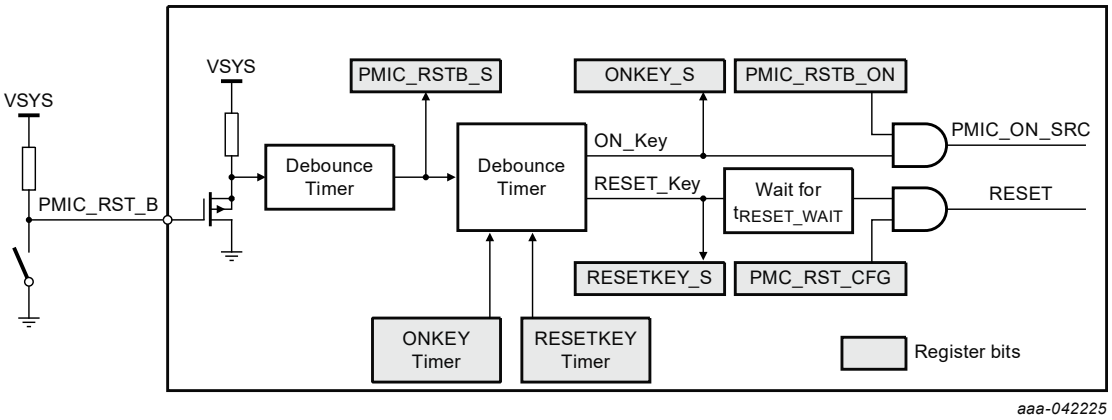

Figure 8. PMIC_RST_B block diagram

7.4.3.2 Power ON sequence

PCA9460 supports flexible power sequencer which power-on sequence can be pre-programmed in OTP.

When PMIC_ON_SRC is asserted high, PUD_T1 group is turned on at first in t_{ON_STEP} after PMIC_ON_SRC is high. The next group, PUD_T2 is turned on in t_{ON_STEP} after POK of PUD_T1 group regulator(s) is high. If the POK doesn't come up within t_{POK_EXP}, then the POK is ignored and the next group is turned ON in t_{ON_STEP}. This power on sequence ended up releasing POR_B pin high impedance in t_{RSTB} after the last group, PUD_T16 regulator is turned ON. PUD group which any regulator is not assigned, the next PUD group is turned on in t_{ON_STEP}.

All information provided in this document is subject to legal disclaimers.

© 2025 NXP B.V. All rights reserved.

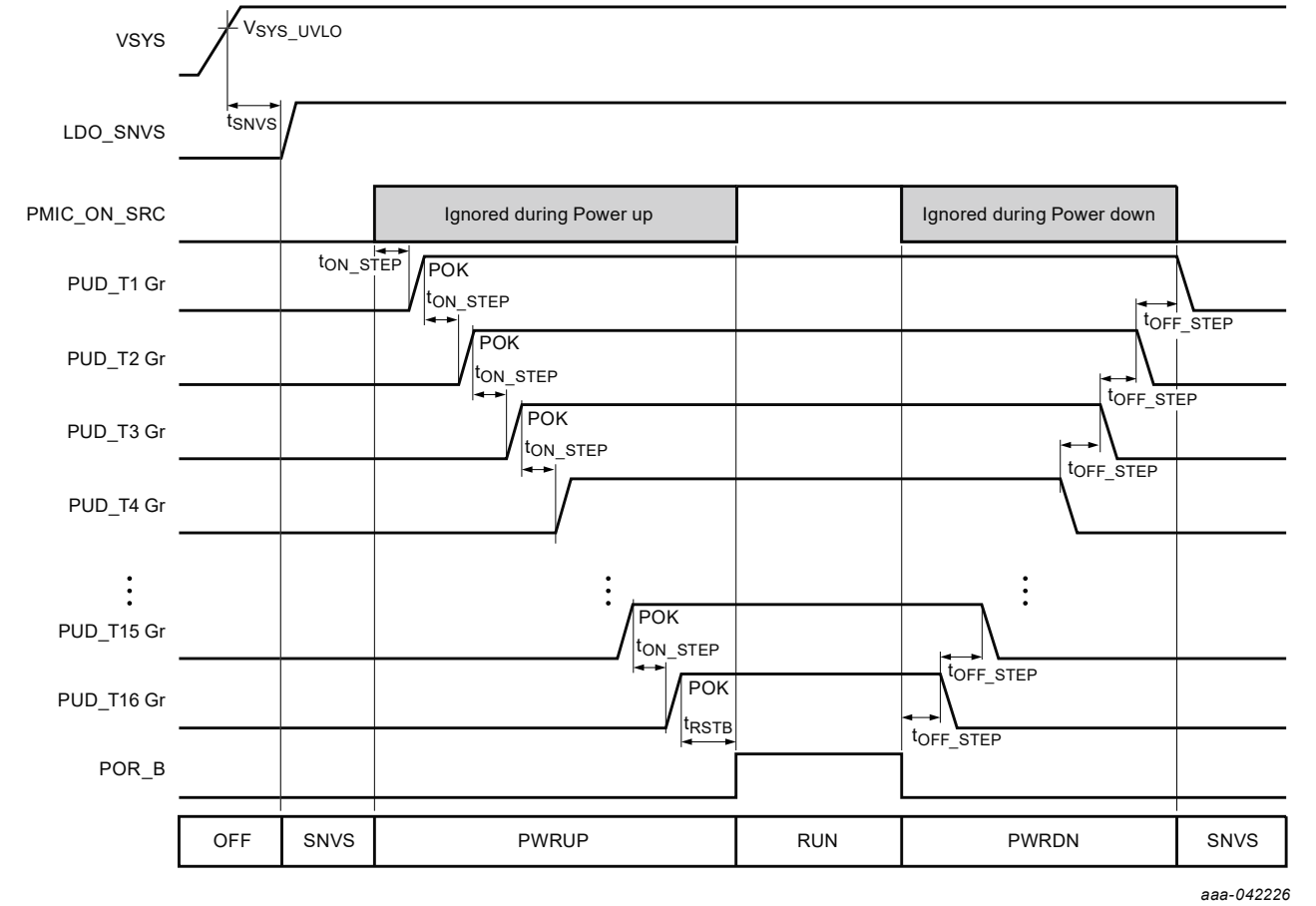

Figure 9. PCA9460 power ON/OFF sequence

Table 5. Power up sequence

Regulator	PCA9460A	PCA9460B	PCA9460C
BUCK1	T8, 1.8 V	T8, 1.8 V	T8, 1.8 V
BUCK2	T10, 1.0 V	T10, 1.0 V	T10, 1.0 V
BUCK3	T11, 1.0 V	T11, 1.0 V	T11, 1.0 V
BUCK4	T11, 1.1V	T11, 1.1V	T11, 1.2V
LDO1	T14, 1.1V	T14, 0.6V	T14, 1.2V
LDO2	T9, 3.3 V	T9, 3.3 V	T9, 3.3 V
LDO3	T12, 3.3 V	T12, 3.3 V	T12, 3.3 V
LDO4	T12, 1.8 V	T12, 1.8 V	T12, 1.8 V
LSW1	T13	T13	T13
LSW2	T10	T10	T10
LSW3	T15	T15	T15
LSW4	T9	T9	T9

All information provided in this document is subject to legal disclaimers.

© 2025 NXP B.V. All rights reserved.

7.4.4 PWRDN state

When PMIC_ON_SRC is asserted low in RUN state, PCA9460 enters PWRDN state, where it starts with pulling down POR_B, and then turning off each power rail in t_{OFF_STEP} and is transitioned to SNVS state.

7.4.5 RUN state

PCA9460 enters RUN state after PWRUP state. If PMIC_ON_SRC is asserted low, PCA9460 is transitioned to PWRDN state. When Cold reset event is triggered in RUN state, it is transitioned to PWRDN state. Regulator fault or Thermal shutdown happens in this state, it is transitioned to FAULT_SD state.

There are three kinds of modes in RUN state, ACTIVE, STANDBY and DPSTANDBY modes, depending on PMIC_STBY_REQ pin and STANDBY_CFG bit in SYS_CFG1 register.

Internal signals to change modes are generated as below.

1. PMIC_STBY = PMIC_STBY_REQ pin when STANDBY_CFG = 0b
   PMIC_STBY is set high only when PMIC_STBY_REQ pin is high and STANDBY_CFG bit is 0b.
2. PMIC_DEEP_STBY = PMIC_STBY_REQ pin when STANDBY_CFG = 1b
   PMIC_DEEP_STBY is set high only when PMIC_STBY_REQ pin is high and STANDBY_CFG bit is 1b.

Each regulator and load switch have enable configuration bits to turn on each mode.

00b = OFF

01b = ON at RUN State

10b = ON at ACTIVE mode or STANDBY mode, OFF at DPSTANDBY

11b = ON at ACTIVE mode, OFF at STANDBY or DPSTANDBY

7.4.5.1 ACTIVE mode

When PCA9460 enters RUN state from PWRUP state, it enter ACTIVE mode at first. And then it transitions to STANDBY mode or DPSTANDBY mode depending on PMIC_STBY or PMIC_DEEP_STBY signal.

7.4.5.2 STANDBY mode

PCA9460 is transitioned to STANDBY mode when PMIC_STBY is high. PMIC_STBY is determined by PMIC_STBY_REQ pin when STANDBY_CFG bit in SYS_CFG1 register is set to 0b. PCA9460 move to ACTIVE mode when PMIC_STBY_REQ pin is low. It transitioned to DPSTANDBY mode when STANDBY_CFG bit is changed to 1b.

7.4.5.3 DPSTANDBY mode

PCA9460 is transitioned to DPSTANDBY (Deep Standby) mode when PMIC_DEEP_STBY is high. PMIC_DEEP_STBY is determined by PMIC_STBY_REQ pin when STANDBY_CFG bit in SYS_CFG2 register is set to 1b. PCA9460 move to ACTIVE mode when PMIC_STBY_REQ pin is low. It transitioned to STANDBY mode when STANDBY_CFG bit is changed to 0b.

Table 6. States summary

State	Mode	VSYS	PMIC_ON_SRC	STANDBY_CFG bit	PMIC_STBY_REQ
OFF	—	VSYS < V_{SYS_UVLO}	X	X	X
SNVS	—	VSYS > V_{SYS_UVLO}	Low	X	X
RUN	ACTIVE	VSYS > V_{SYS_UVLO}	High	X	Low

All information provided in this document is subject to legal disclaimers.

© 2025 NXP B.V. All rights reserved.

Table 6. States summary...*continued*

State	Mode	VSYS	PMIC_ON_SRC	STANDBY_CFG bit	PMIC_STBY_REQ
RUN	STANDBY	VSYS > V_{SYS_UVLO}	High	0b	High
RUN	DPSTANDBY	VSYS > V_{SYS_UVLO}	High	1b	High

X : Don't care

7.4.6 FAULT_SD state

PCA9460 has two fault shutdown sources.

1. **Thermal shutdown**: Transition to SNVS state after FAULT_SD state
   When junction temperature reaches T_{JSHDN}, it enters FAULT_SD state after t_{FLT_THSD}, where all regulators are turned off immediately after pulling down POR_B. It stays at FAULT_SD until junction temperature falls below T_{JSHDN}. When the temperature drops below T_{JSHDN}, then it transitions to SNVS state.

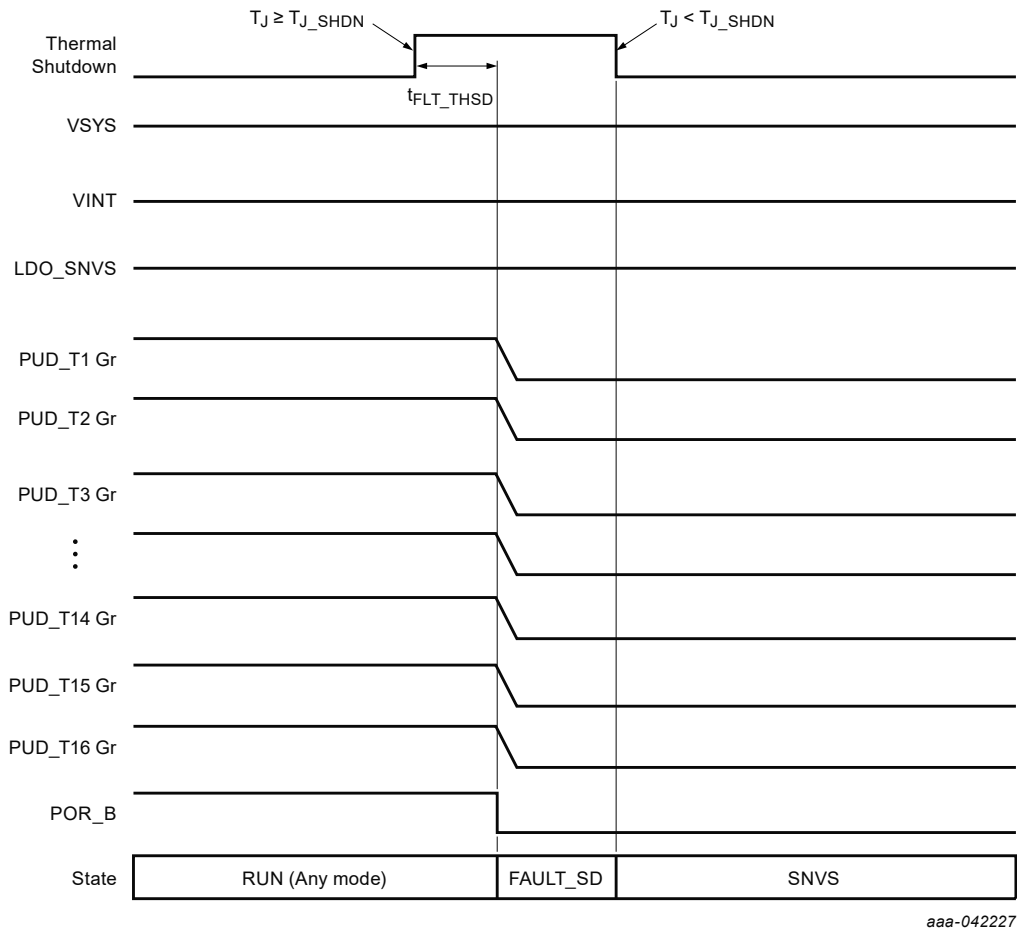

Figure 10. PCA9460 FAULT_SD from thermal shutdown

Table 7. FAULT_SD from Thermal shutdown description

Time	Description	Value	Comment
t_{FLT_THSD}	Time to reset released from Fault event	20 µs	

All information provided in this document is subject to legal disclaimers.

© 2025 NXP B.V. All rights reserved.

2. **Voltage regulator fault in RUN state**: Transition to FAULT_SD state in $t_{FLT_SD_WAIT}$ after Fault is detected and then transition to SNVS state in $t_{FLT_SD_STAY}$

VR Fault status bit in INT1_STATUS register is latched to "1" when corresponding regulator voltage falls below POK threshold for t_{DEB_POKB}.

If the fault status bit is masked in VRFLT1_MASK register, PCA9460 doesn't enter FAULT_SD state, instead, PCA9460 stays at RUN state. If the fault register bit is unmasked, it starts $t_{FLT_SD_WAIT}$ timer. Application processor can determine to enter FAULT_SD state by masking the VR Fault status bit in VRFLT1_MASK registers before the timer expires. PCA9460 enter FAULT_SD state when the timer is expired. PCA9460 stays at FAULT_SD state for $t_{FLT_SD_STAY}$ and moves to SNVS state from FAULT_SD mode after $t_{FLT_SD_STAY}$.

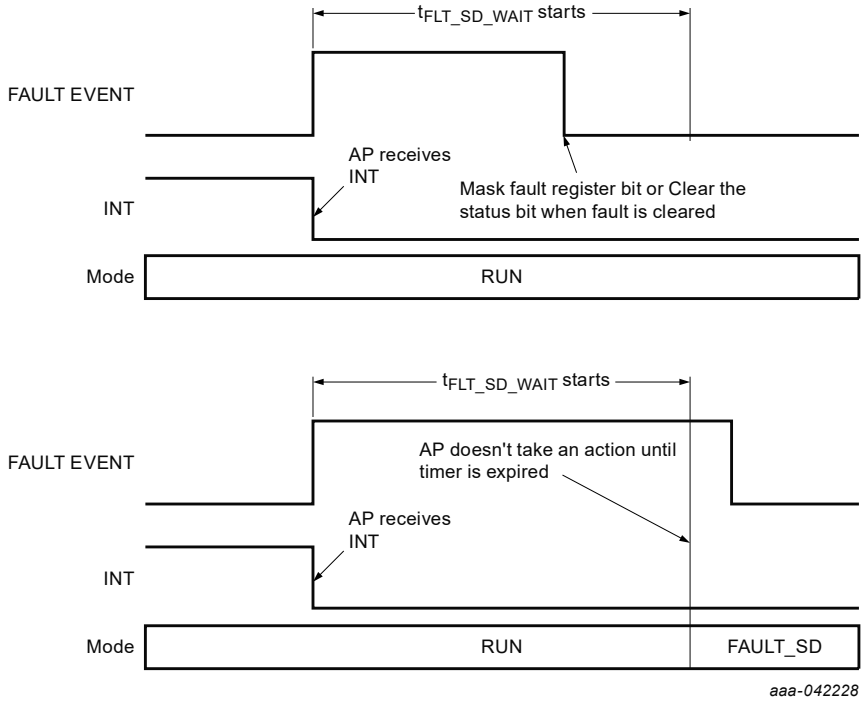

Figure 11. FAULT_SD from VR Fault in RUN state

All information provided in this document is subject to legal disclaimers.

© 2025 NXP B.V. All rights reserved.

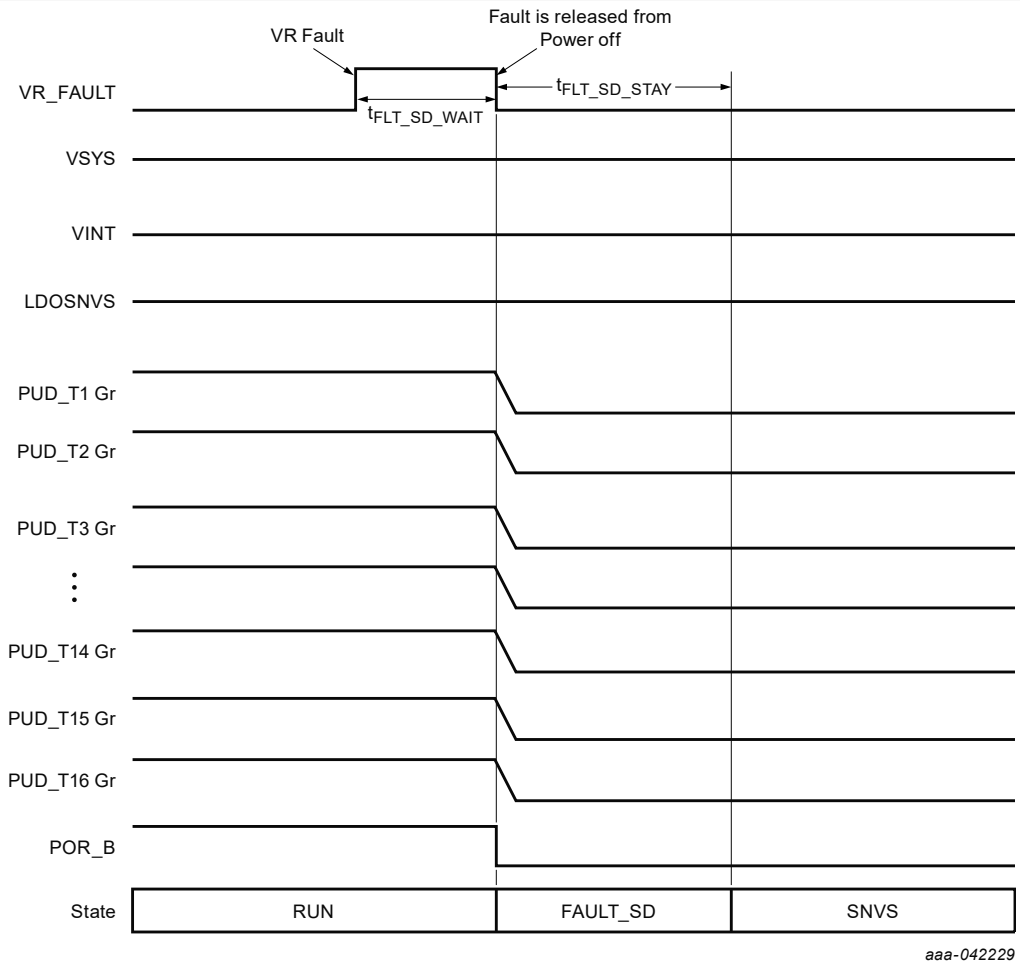

Figure 12. PCA9460 FAULT_SD from VR Fault in RUN/STANDBY

Table 8. FAULT_SD description

Time	Description	Value	Comment
$t_{FLT_SD_WAIT}$	VR Fault wait time to enter fault shutdown	100 ms	20 µs, 100 ms option
$t_{FLT_SD_STAY}$	Time to stay at Fault_SD state	100 ms	

7.5 PMIC reset

The PCA9460 PMIC has three reset inputs, WDOG_B pin, PMIC_RST_B pin and I^2C reset bit, The reset is executed only at RUN state.

The reset behavior is configured in 0x08 RESET_CTRL register for WDOG_B pin and PMIC_RST_B pin. I^2C reset behavior is configured in 0x09 SW_RST register.

All information provided in this document is subject to legal disclaimers.

© 2025 NXP B.V. All rights reserved.

Table 9. PMIC Reset description

0x08 – RESET_CTRL				Reset Type	S
Bit	**Name**	**Type**	**Reset**	**Description**	
7 to 6	WDOG_B_CFG	R/W	00	When WDOG_B is asserted to L, PMIC behavior **00b = WDOG_B reset is disabled** 01b = Warm Reset, POR_B pin is asserted low for t_{RSTB} 10b,11b = Cold Reset, All voltage regulators are recycled	
5 to 4	PMIC_RST_CFG	R/W	10	When PMIC_RST_B is asserted to L, PMIC behavior 00b = PMIC_RST_B reset is disabled 01b = Warm Reset, POR_B pin is asserted low for t_{RSTB} **10b**, 11b **= Cold Reset, All voltage regulators are recycled**	
0x09 – SW_RST				**Reset Type**	**O**
Bit	**Name**	**Type**	**Reset**	**Description**	
7 to 0	SW_RST_KEY	R/W	0x00	Software reset register. This register is read back to "0x00" right after writing the value. **0x00 = No action** 0x05 = Reset O-type registers to default value 0x09 = Reset O-type registers and S-type registers 0x14 = Cold reset (Power recycle all regulators) 0x35 = Warm Reset (Toggle POR_B for t_{RSTB}) 0xEE = PMIC digital reset (Debug purpose only) Others = Forbidden	

WDOG_B is asserted low, PCA9460 gets reset depending on WDOG_B_CFG bit configuration. When the bits are set to 2b00, the reset by WDOG_B pin is disabled. If the bits are set to 2b01, warm reset is preformed, where pulling POR_B low for t_{RESET} and reset I^2C O type registers to default value keeping power rails remaining ON. After reset, WDOG_B pin must be released high to get another reset from WDOG_B falling edge.

When PMIC_RST_B is asserted low and it stays low for RESETKEY timer configured in SYS_CFG1 register, PCA9460 waits for t_{RESET_WAIT} after issuing RESETKEY interrupt. If application processor doesn't disable reset by writing 00b in PMIC_RST_CFG bits, then PCA9460 gets reset depending on PMIC_RST_CFG bits configuration. When the bits are set to 2b00, any reset by PMIC_RST_B pin is disabled. If the bits are set to 2b01, warm reset is preformed, in which pulling POR_B low for t_{RESET} and reset I^2C O type registers to default value keeping power rails remaining ON. After reset, PMIC_RST_B pin must be released high to get another reset from PMIC_RST_B falling edge.

Cold reset event is generated by either of I^2C reset, WDOG_B falling edge or PMIC_RST_B falling edge after debounce time. Once it is detected, POR_B is pulled low and takes power down sequence. PCA9460 stays at RESET for $t_{RESTART}$ and then start power on sequence even though WDOG_B pin is still low.

Figure 13 shows cold reset behavior. From any cold reset signal from either of PMIC_RST_B, WDOG_B or I^2C, it starts with power down sequence and stays off for $t_{RESETART}$. It automatically proceed power ON sequence and then enters RUN state. PMIC_ON_SRC is ignored for $t_{PWR_HOLD_RST}$ after entering RUN state. If PMIC_ON_SRC doesn't come up until $t_{PWR_HOLD_RST}$ is expired, then PCA9460 is turned off.

All information provided in this document is subject to legal disclaimers.

© 2025 NXP B.V. All rights reserved.

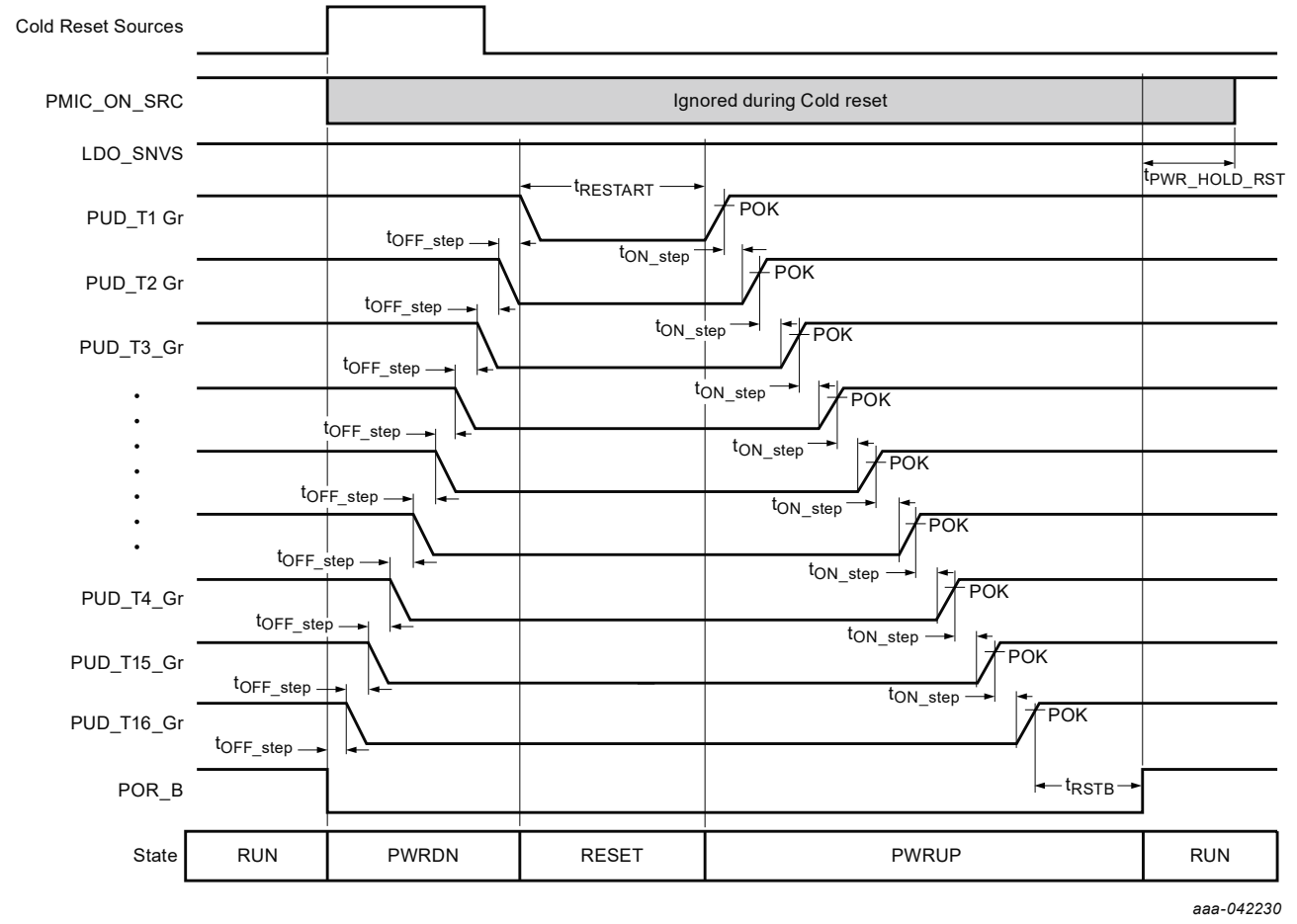

Figure 13. PCA9460 Cold reset

Table 10. PCA9460 Cold reset description

Time	Description	Value	Comment
$t_{RESTART}$	Time to power ON seq from end of power OFF seq during cold reset	250 ms	
$t_{PWR_HOLD_RST}$	Time to hold power-on after reset	100 ms	

Figure 14 shows warm reset behavior. From any warm reset signal from either of PMIC_RST_B, WDOG_B or I^2C, it makes POR_B toggled for t_{RESET} and all O type registers get reset. PMIC_ON_SRC is ignored for $t_{PWR_HOLD_RST}$ after entering RUN state as like cold reset behavior.

All information provided in this document is subject to legal disclaimers.

© 2025 NXP B.V. All rights reserved.

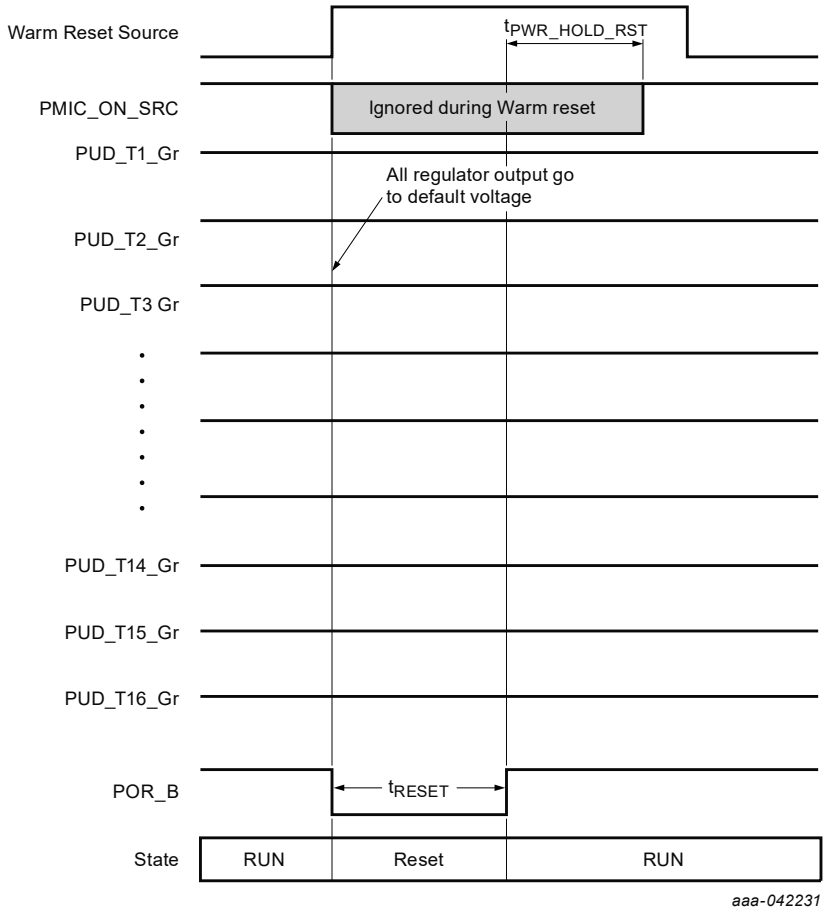

Figure 14. Warm reset

Table 11. Warm reset description

Time	Description	Value	Comment
t_{RESET}	POR_B low time at Warm reset	20 ms	

7.6 Regulator summary

The PCA9460 PMIC features four high efficiency low quiescent current buck regulators, four LDO regulators and low iq SNVS LDO to supply voltages for the application processor and peripheral devices.

7.6.1 BUCK regulator

The PCA9460 has four high-efficiency low Iq buck regulators. Each buck regulator features soft start and over-current protection. Buck regulator operates in two modes, PFM and PWM mode. Each buck regulator operates in PFM(Pulse Frequency Modulation) mode at light load that generates a single switching pulse to ramp up the inductor current and recharge the output capacitor, followed by a sleep period where most of the internal circuits are shutdown to achieve lowest operating quiescent current. During this time, the load current is supported by the output capacitor. The duration of the sleep period depends on the load current and the inductor peak current.

In PFM Mode, the switching frequency varies linearly with the load current. At medium and high load conditions, the device enters automatically PWM (Pulse Width Modulation) mode operating in continuous conduction and using an adaptive ON time control technique for which the typical switching frequency (fsw) is ≈2 MHz.

All information provided in this document is subject to legal disclaimers.

© 2025 NXP B.V. All rights reserved.

However the switching frequency could vary depending on Vin, Vout, load current and operating temperature. The boundary between PWM and PFM mode is when the inductor current becomes discontinuous.

When the Bx_FPWM bits (Bit 2) on the BUCKxCTRL registers are set to 1, the buck regulator operates in only PWM mode, regardless of load current.

Internal active discharge resistor is installed in each buck regulator output to discharge voltage on output capacitors when regulator is off. It is configurable through the I^2C register using Bx_AD bit (Bit 3) on BUCKxCTRL registers.

Table 12 shows buck regulator summary.

Table 12. PCA9460 Buck Summary

Buck#	Input pin	Default VOUT [V]	VOUT range [V]	Step size [mV]	Default ON/ OFF	Current rating [mA]
BUCK1	INB14	1.8	0.6 to 3.4	25	ON	1000
BUCK2	INB23	1.0	0.6 to 2.1875	12.5	ON	1000
BUCK3	INB23	1.0	0.6 to 2.1875	12.5	ON	1000
BUCK4	INB14	[1]	0.6 to 3.4	25	ON	1000

[1] PCA9460A and PCA9450B: 1.1 V, PCA9460C: 1.2 V

BUCK1 and BUCK4 output voltages are programmable from 0.60 V to 3.40 V in 25 mV steps. This is done by setting the B1_OUT[6:0], and B4_OUT[6:0] bits on registers BUCK1OUT and BUCK4OUT respectively. Table 110 shows the output voltage coding for these regulators.

BUCK2 and BUCK3 output voltages are programmable from 0.60 V to 2.1875 V in 12.5 mV steps. Setting Bx_DVS_CTRL bits to 00b, DVS is controlled by Bx_DVS0[6:0] bits on BUCKxOUT_DVS0 register through I^2C. Table 109 shows the output voltage coding for these regulators.

7.6.1.1 ON/OFF control

Each buck regulator can be turned ON/OFF through I^2C or PMIC_STBY_REQ pin, which can be configured in each Bx_ENMODE bits in BUCKxCTRL register.

- BxENMODE = 00b : the buck regulator is forcedly OFF
- BxENMODE = 01b : the buck regulator is ON in RUN state (ACTIVE / STANDBY / DPSTANDBY mode)
- BxENMODE = 10b : the buck regulator is ON in ACTIVE or STANDBY mode and it is OFF in DPSTANDBY mode
- BxENMODE = 11b : the buck regulator is ON in ACTIVE mode and it is OFF in STANDBY or DPSTANDBY mode

7.6.1.2 Dynamic voltage scaling

BUCK2 and BUCK3 support dynamic voltage scaling (DVS) through MODE[2:0] pins or PMIC_STBY_REQ pin depending on Bx_DVS_CTRL bits in BUCK23_DVS_CFG2 register.

Table 13. 0x13 – BUCK23_DVS_CFG2

Reset Type: 0

Bit	Name	Type	Reset	Description
7 to 6	B2_DVS_CTRL	R/W	00	BUCK2 DVS Control **00b = DVS control BUCK2OUT_DVS0 Reg through I^2C** 01b = DVS control through PMIC_STBY_REQ pin

All information provided in this document is subject to legal disclaimers.

© 2025 NXP B.V. All rights reserved.

Table 13. 0x13 – BUCK23_DVS_CFG2*...continued*

Reset Type: 0

Bit	Name	Type	Reset	Description
				10b = DVS control through MODE[2:0] pins in ACTIVE mode and the voltage set to BUCK2OUT_STBY when PMIC_STBY_REQ = H 11b = DVS control through MODE[2:0] pins in RUN state
5 to 4	B3_DVS_CTRL	R/W	00	BUCK3 DVS Control **00b = DVS control BUCK3OUT_DVS0 Reg through I^2C** 01b = DVS control through PMIC_STBY_REQ pin 10b = DVS control through MODE[2:0] pins in ACTIVE mode and the voltage set to BUCK3OUT_STBY when PMIC_STBY_REQ = H 11b = DVS control through MODE[2:0] pins in RUN state
3 to 0	RSVD	R/W	0000	Reserved

When Bx_DVS_CTRL bits are set to 00b, DVS is controlled by Bx_DVS0 bits on the BUCKxOUT_DVS0 register through I^2C. If BUCKxOUT_DVS0 register is overwritten with different voltage through I^2C, the output voltage is changed accordingly without ramping up/down.

When the Bx_DVS_CTRL bits are set to 01b, the buck regulator output voltage is determined by BUCKxOUT_DVS0 and BUCKxOUT_STBY registers through PMIC_STBY_REQ pin.

When the bits are set to 10b, the output voltage is controlled by MODE[2:0] pins in ACTIVE mode (PMIC_STBY_REQ pin = L) and the voltage is set to BUCKxOUT_STBY register in STANDBY mode or DPSTANDBY mode (PMIC_STBY_REQ pin = H), where MODE[2:0] pins should not be changed.

When the bits are set to 11b, the buck voltage is always controlled by MODE[2:0] pins.

Figure 15 shows DVS function block diagram and Table 14 show how buck voltage is determined by MODE[2:0] pins.

All information provided in this document is subject to legal disclaimers.

© 2025 NXP B.V. All rights reserved.

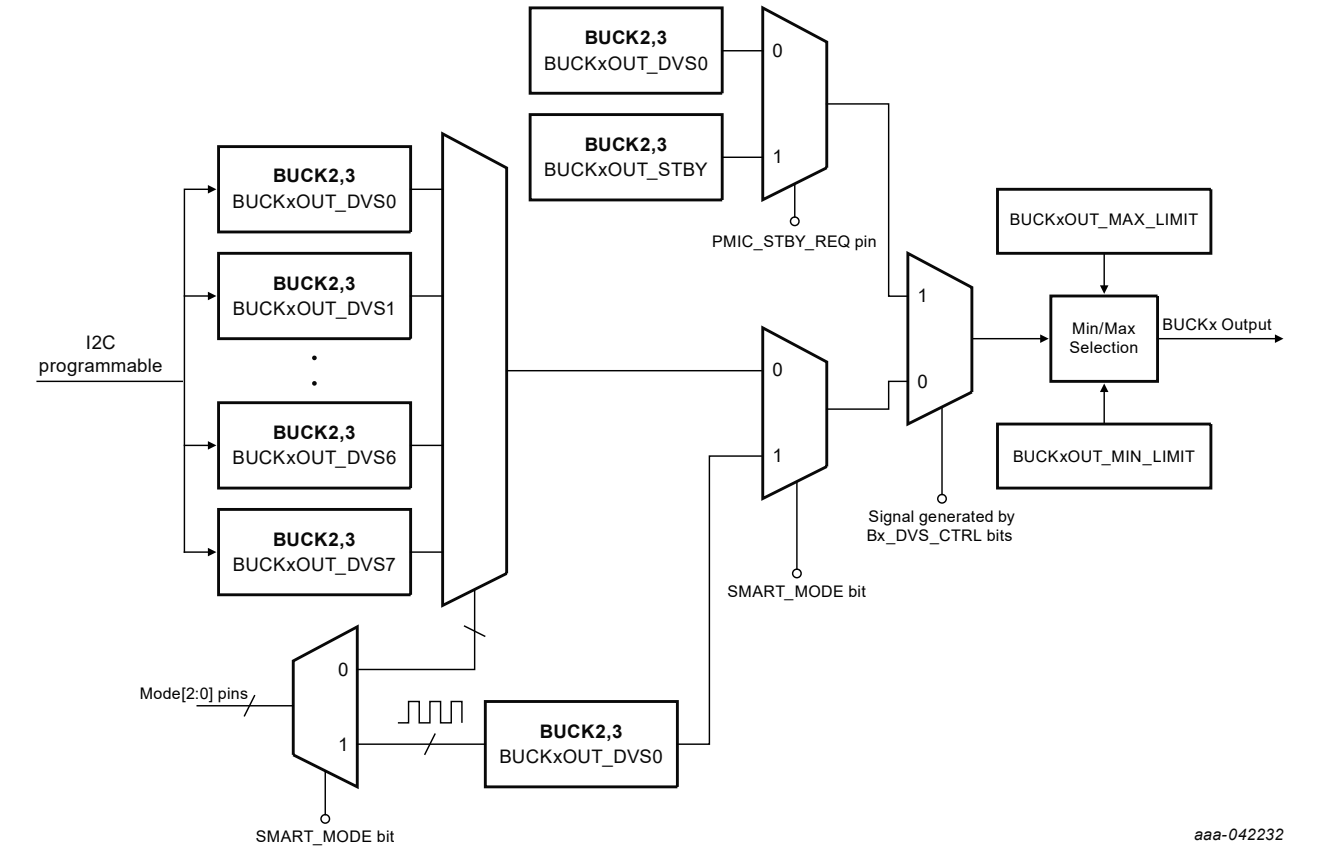

Figure 15. DVS functional diagram

Table 14. MODE[2:0] pins configuration

I²C bits		PMIC MODE pins			Buck output voltage
SMART_MODE	MODE2_EN	MODE2	MODE1	MODE0	
0	X	0	0	0	BUCKxOUT_DVS0
0	X	0	0	1	BUCKxOUT_DVS1
0	X	0	1	0	BUCKxOUT_DVS2
0	X	0	1	1	BUCKxOUT_DVS3
0	X	1	0	0	BUCKxOUT_DVS4
0	X	1	0	1	BUCKxOUT_DVS5
0	X	1	1	0	BUCKxOUT_DVS6
0	X	1	1	1	BUCKxOUT_DVS7
1	0	X	0	0	No voltage Change
1	0	X	0	1	Decrement by Bx_DVS_DN mV, select BUCK through BUCK_SEL bit
1	0	X	1	0	Increment by Bx_DVS_UP mV, select BUCK through BUCK_SEL bit
1	0	X	1	1	No voltage Change
1	1	0	0	0	No voltage Change

All information provided in this document is subject to legal disclaimers.

© 2025 NXP B.V. All rights reserved.

Table 14. MODE[2:0] pins configuration...*continued*

I²C bits		PMIC MODE pins			Buck output voltage
SMART_MODE	MODE2_EN	MODE2	MODE1	MODE0	
1	1	0	0	1	Decrement BUCK2 by Bx_DVS_DN mV
1	1	0	1	0	Increment BUCK2 by Bx_DVS_UP mV
1	1	0	1	1	No voltage Change
1	1	1	0	0	No voltage Change
1	1	1	0	1	Decrement BUCK3 by Bx_DVS_DN mV
1	1	1	1	0	Increment BUCK3 by Bx_DVS_UP mV
1	1	1	1	1	No voltage Change

When SMART_MODE bit in BUCK23_DVS_CFG1 register is set to 0b, MODE[2:0] pins are used to select buck DVS output voltage configuration, BUCKxOUT_DVSx registers, which should be pre-configured by application processor. PCA9460 detects the first level change among MODE[2:0] pins, 3 internal clock later, the output voltage is updated. The maximum latency of these MODE pins is specified to t_{MAX_DIFF}.

Figure 16 shows DVS operation through MODE[2:0] pins when SMART_MODE bit is set to 0b.

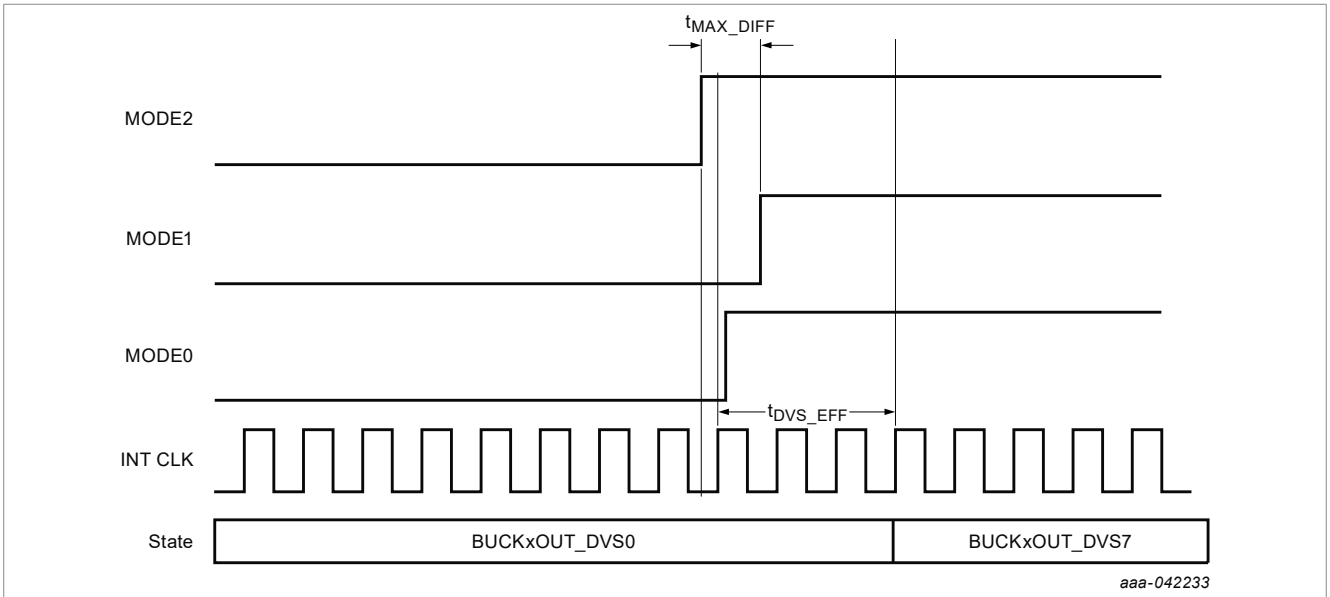

Figure 16. MODE[2:0] pins operation at SMART_MODE = 0

When SMART_MODE is set to 1b and MODE2_EN bit is set to "0", MODE2 pin is ignored in DVS function, MODE1 pin is used to increase buck regulator as much as Bx_DVS_UP bit by issuing one pulse. And MODE0 pin is used to decrease buck regulator as much as Bx_DVS_DN bit by issuing one pulse. The pulse width is controlled trough MODE_PULSE bit (bit 3) of the BUCK23_DVS_CFG1 register. Buck regulator should be selected through BUCK_SEL bit in this mode. Whenever the voltage is updated through MODE pin, the voltage is updated in BUCKxOUT_DVS0 register so as application processor can check the current output voltage setting. When both pin has same logic level, then the buck voltage is not changed.

When SMART_MODE is set to 1b and MODE2_EN bit is set to 1b, MODE2 pin is used to select BUCK regulator to be increased or decreased through MODE1 and MODE0 pins.

Figure 17 shows DVS operation through MODE[2:0] pins when SMART_MODE bit is set to 1b.

All information provided in this document is subject to legal disclaimers.

© 2025 NXP B.V. All rights reserved.

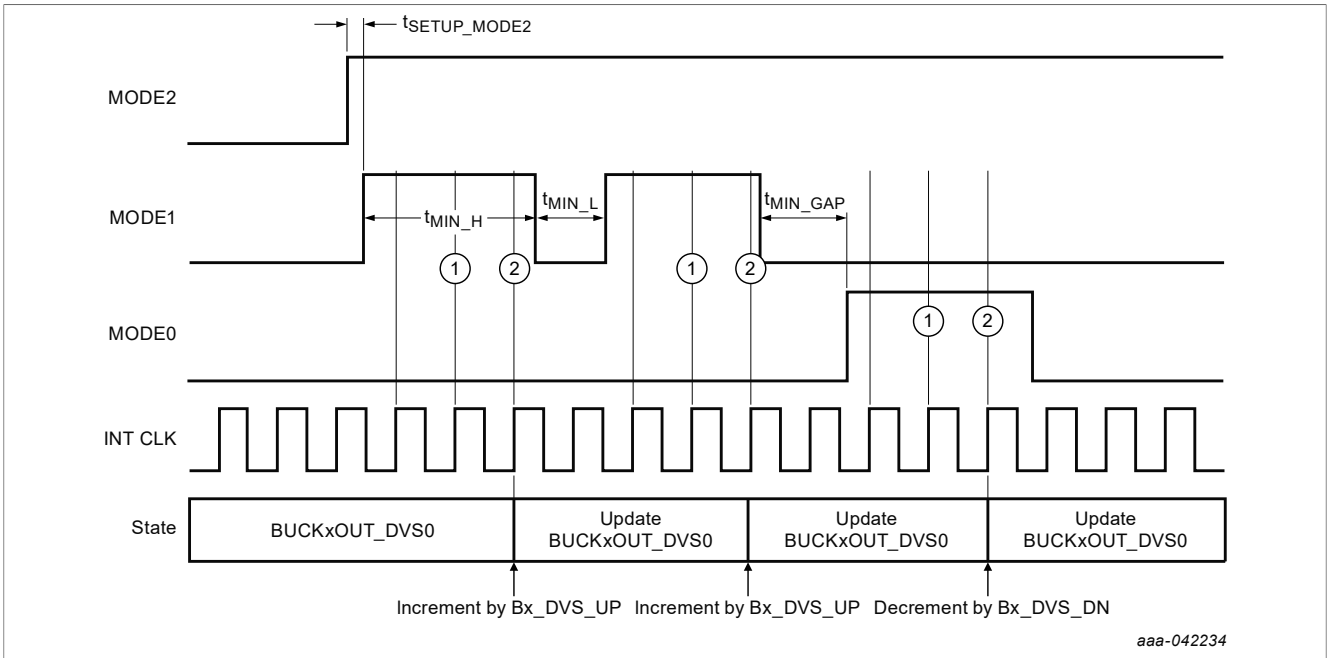

Figure 17. MODE[2:0] pins operation at SMART_MODE = 1b, MODE2_EN = 1b

MODE pins control requirements in SMART_MODE = 1b are:

1. MODE2 pin should be set within t_{SETUP_MODE2} before MODE1 or MODE0 pin is toggled
2. High Pulse hold time should be longer than t_{MIN_H}
3. Low pulse hold time should be longer than t_{MIN_L}
4. When MODE1 pin is toggled after MODE0 pin toggled and vice versa, it should be longer than t_{MIN_GAP}.
5. Once detecting high pulse, the voltage is updated in BUCKxOUT_DVS0 register after two internal clocks.
6. Either MODE1 or MODE0 pin stay high, the buck regulator voltage is updated only once after two clocks.

The programmable voltage ramp-up and ramp-down are applied during the DVS voltage transition. The ramp rate is configured by Bx_RAMP[7:6] bits in each BUCKxCTRL registers.

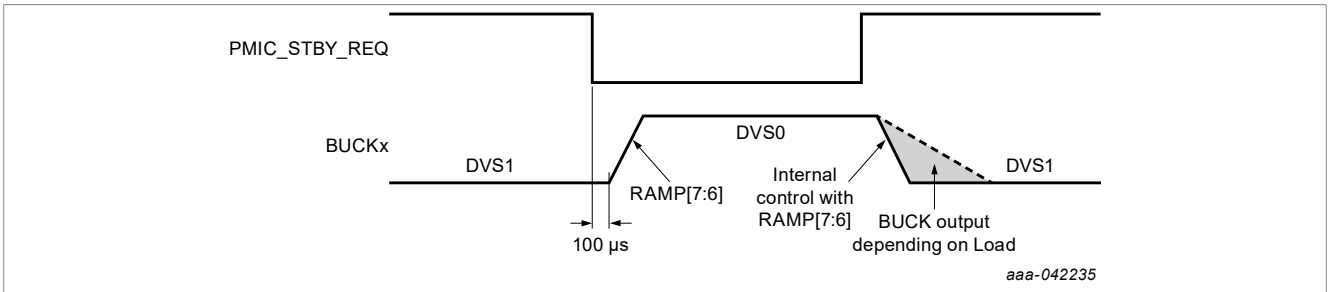

Figure 18. DVS timing

7.6.1.3 Overshoot improvement from PWM to PFM mode transient

The load transient response in PWM mode is improved compared to PFM mode, since the converter reacts faster on the load step and actively sinks energy on the load release. PCA9460 Buck regulator automatically enters PWM mode for 16 cycles after a heavy load release in order to bring the output voltage back to the regulation level faster. After 16 cycles of PWM mode, it automatically returns to PFM mode.

All information provided in this document is subject to legal disclaimers.

© 2025 NXP B.V. All rights reserved.

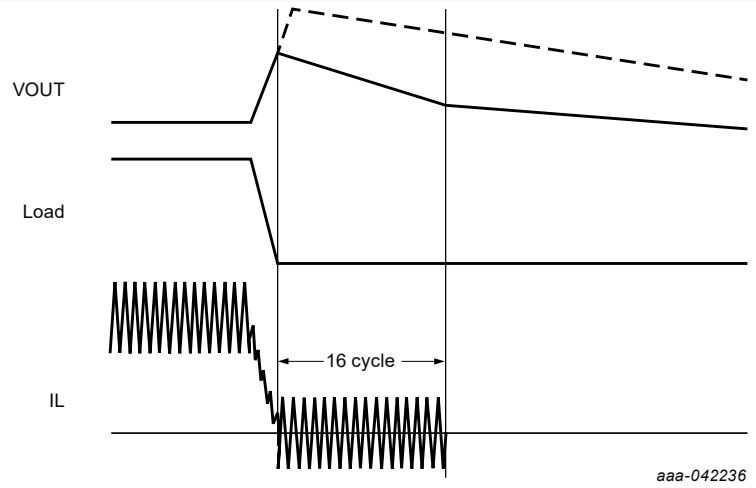

Figure 19. Transition from PWM to PFM

7.6.1.4 Low power mode

If BUCK is configured in low power mode, it turns internal circuity off to minimize quiescent current. The current is limited to IOUT_Max in Low Power Mode. BUCK2 and BUCK3 DVS feature also disabled in this mode. Therefore, low power mode should be used carefully not to exceed IOUT_Max current.

Each buck regulator has low power mode configuration bits in BUCKx_CTRL register.

Table 15. Low power mode

BUCK_CTRL				Reset Type	O
Bit	**Name**	**Type**	**Reset**	**Description**	
5 to 4	Bx_LPMODE	R/W	11	BUCK power mode 00b = Automatic transition mode 01b = Low power mode at STANDBY mode and DPSTANDBY mode 10b = Low power mode at DPSTANDBY mode **11b = Normal mode**	

If Bx_LPMODE bits are set to 00b, the buck regulator runs automatic transition mode between low power mode and normal mode depending on load current. When it is set to 01b, buck operates in normal mode at ACTIVE mode and in low power mode at STANDBY mode and DPSTANDBY mode. If it is set to 10b, the buck is in low power mode only at DPSTANDBY mode.

7.6.1.5 BUCK output limiting

Application processor may accidentally write higher voltage than absolute maximum voltage rating of its power input, it may cause significant damage on application processor. PCA9460 has registers to limit the maximum voltage to prevent such an incident.

BUCK2 and BUCK3 maximum / minimum output are limited by BUCKxOUT_MAX_LIMIT and BUCKxOUT_MIN_LIMIT registers, respectively. Even if Buck output is configured to higher than the limit voltage configured in BUCKxOUT_MAX_LIMIT registers or lower than the min limit voltage configured in BUCKxOUT_MIN_LIMIT registers, the actual buck output is clamped to the limiting voltage set by BUCKxOUT_MAX_LIMIT or BUCKxOUT_MIN_LIMIT registers.

All information provided in this document is subject to legal disclaimers.

© 2025 NXP B.V. All rights reserved.

7.6.2 LDO

The PCA9460 has five low quiescent LDOs. LDO_SVNS is supposed to supply SNVS core in application processor. This LDO features ultra-low quiescent current, 0.25 µA typical, since it is always ON when VSYS is valid. Each LDO is fully controlled through its respective LDOxCFG and LDOx_OUT registers. LDOxCFG registers enable the user to individually set the LDO configuration and enable and set the operational mode on each regulator using Lx_ENMODE bits [1:0]. While LDOx_OUT registers enable the user to individually set the output voltage according to Table 115 for LDO1; Table 120 for LDO2; Table 127 for LDO3; and Table 132 for LDO4.

Users can set LDO1 into Low Power Mode by setting the L1_LPMODE [1:0] bits on LDO1_CFG register (0x30).

The internal active discharge resistor is installed in each LDO regulator output to discharge voltage on output capacitors when the regulator is off. It is configurable through I^2C register using the following:

- L1_AD bit (bit 7) on LDO1_OUT (0x31)
- Lx_AD bit (bit 4) on LDO2_CFG (0x32), LDO3_CFG (0x35), and LDO4_CFG (0x37)

Table 16. LDO summary (PCA9460A)

LDO#	Input pin	Default VOUT (V)	VOUT range (V)	Step size (mV)	Default ON/ OFF	Current rating (mA)
LDO1	INL1	[1]	0.6 to 1.95	50	ON	250
LDO2	INL	3.3	0.8 to 3.3	50	ON	250
LDO3	INL	3.3	0.8 to 3.3	50	ON	250
LDO4	INL	1.8	0.8 to 3.3	50	ON	250
LDO_SNVS	VSYS	3.0	0.8 to 3.3	50	ON	10

[1] PCA9460A: 1.1 V, PCA9460B:0.6 V, PCA9460C: 1.2 V

The LDOSNVS regulator is fully controlled through the LDOSNVS_CFG register. Users can enable/disable the internal active discharge resistor using LSNVS_AD bit (Bit 7); enable/disable the regulator using LS_ENMODE bit (bit 6); and use the L_SNVS_OUT bits [5:0] to set the output voltage according to Table 135.

7.6.3 Regulator protection

Each regulator output voltage configuration register is protected by lock key. Unlock key must be written with 01011100 (0x5C) to UNLOCK_KEY [7:0] bits in REG_LOCK (0x4E) register before updating the registers. Below are protected registers.

1. BUCK output configuration registers : BUCK1OUT, BUCK4OUT
2. BUCK2, 3 Min/Max output configuration registers : BUCK2OUT_MAX_LIMIT, BUCK2OUT_MIN_LIMIT, BUCK3OUT_MAX_LIMIT, BUCK3OUT_MIN_LIMIT.
3. LDO output configuration registers : LDO1_OUT, LDO2_OUT_L, LDO2_OUT_H, LDO3_OUT, LDO4_OUT

7.6.4 Current limit protection

In case a regulator exceeds the current limit (ILIM parameter for the BUCK regulators or ILIMT for the linear regulators) of each target, the output of the regulator will fall below POK (Output Power good) threshold caused by overcurrent limit, then VRFLT1_INT register will generate an interrupt and system transitions to Fault_SD state. Please refer to “Voltage regulator fault in RUN state” fault source in Section 7.4.6 "FAULT_SD state" for details.

All information provided in this document is subject to legal disclaimers.

© 2025 NXP B.V. All rights reserved.

7.7 Load switch and LED driver

PCA9460 integrates four 150mΩ PMOS switch configurable to Load switch or LED driver through I^2C.

When an LSWx_CFG bit in LSW_CFG register is set to 0b, the LSW is configured as Load switch. It is controlled by each LSWx_EN bits in LSW_EN_CTRL register, which provides ON/OFF control automatically in different modes. When it is enabled, it soft-starts to reduce inrush current.

Table 17. Load SW Enable table

LSWx_EN	SNVS State	RUN state		
		Active Mode	STANDBY	DPSTANDBY
00	OFF	OFF	OFF	OFF
01	OFF	ON	ON	ON
10	OFF	ON	ON	OFF
11	OFF	ON	OFF	OFF

When an LSWx_CFG bit is set to 1b, the LSW is configured as LED driver, and its behavior is determined by LEDx_CFG registers including enable mode and brightness configuration.

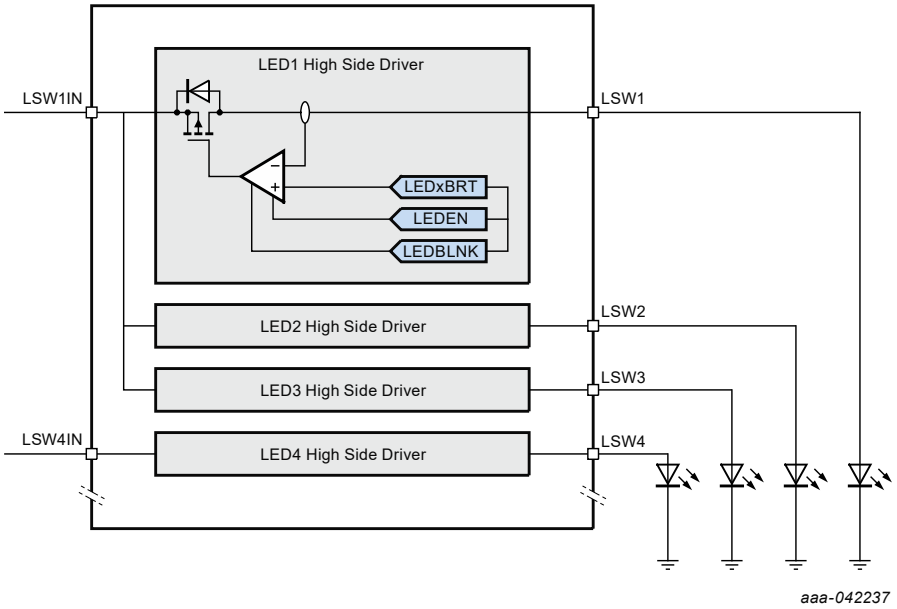

Figure 20. LED Driver block diagram

Each LED channel can be assigned to one of constant ON, blinking pattern 1 and blinking pattern 2. Constant ON is to turn ON LED with configured LED brightness until it is forcedly off though I^2C.

PCA9460 supports two independent blink patterns which is generated by each LEDRAMP register and LEDBLNK register. The Blink pattern always start with OFF time, and then ramp up to I_{LED_BRT} by increasing PWM duty cycle from 0 % to 100 % configured in LEDRAMP register. The ramp up time is determined by PWM duty step size(Px_UP_STEP) and delay time(Px_UP_DLY). Once the current reach the target, the LED channel stays for T_{ON}. a blink pattern ends up with Ramping down by decreasing PWM duty cycle from 100 % to 0 % configured in LEDRAMP register. The ramp down time is determined by PWM duty step size(Px_DN_STEP) and delay time(Px_DN_DLY). This pattern is repeated until any LED channel doesn't select the pattern any longer. Update on the pattern like brightness change or ON/OFF time change during a BLINK mode takes place in next period.

All information provided in this document is subject to legal disclaimers.

© 2025 NXP B.V. All rights reserved.

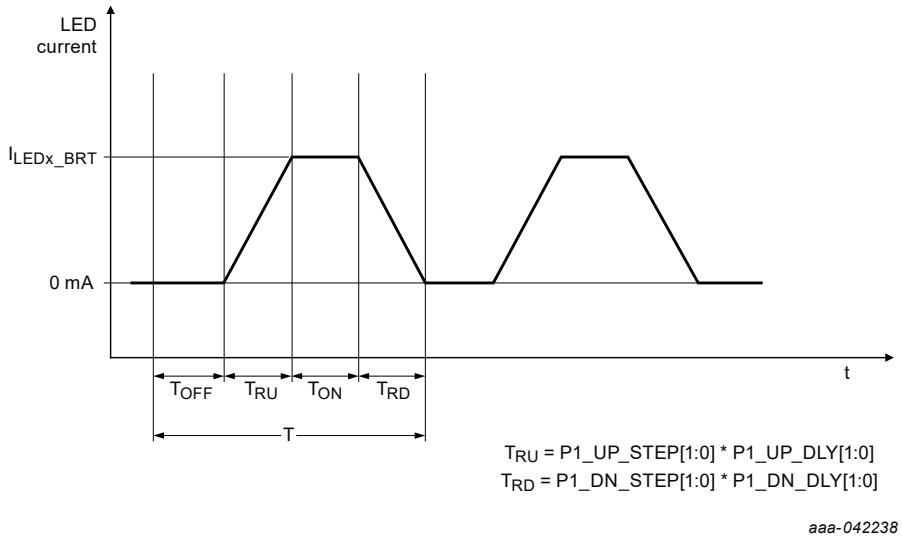

Figure 21. LED Blink Pattern

7.8 Mode selection

7.8.1 MODE0, MODE1, MODE2

MODE[2:0] pins are purposed to control DVS(Dynamic voltage scaling) for BUCK 2 and BUCK3 by default. Those pins can be configured to control LDO2 voltage selection or each load switch ON/OFF through MODEPIN_CFG register as well.

If any MODE pin is configured to any bits other than 00b in MODEPIN_CFG register, the internal MODE pin in DVS control block is set low. For example, if MODE2_CFG bits are configured to 001b, then MODE2 pin is used to control LDO2 voltage selection, and the pin in DVS control block is set low.

If any MODE pin is not configured to LDO2 voltage selection, internal LDO2_VSEL is set low.

Load switch which is not configured to any MODE pin is controlled by only I^2C register bits, LSWx_EN[1:0] bits.

Table 18. 0x0D – MODEPIN_CFG

Reset Type: 0

Bit	Name	Type	Reset	Description
7 to 6	MODE0_CFG	R/W	00	MODE0 pin configuration **00b = DVS control** 01b = LDO2 voltage selection 10b = LSW1 ON/OFF control 11b = LSW4 ON/OFF control
5 to 3	MODE1_CFG	R/W	000	MODE1 pin configuration **000b = DVS control** 001b = LDO2 voltage selection 010b = LSW1 ON/OFF control 011b = LSW2 ON/OFF control 100b = LSW3 ON/OFF control 101b-111b = LSW4 ON/OFF control
2 to 0	MODE2_CFG	R/W	000	MODE2 pin configuration **000b = DVS control**

All information provided in this document is subject to legal disclaimers.

© 2025 NXP B.V. All rights reserved.

Table 18. 0x0D – MODEPIN_CFG*...continued*

Reset Type: 0

Bit	Name	Type	Reset	Description
				001b = LDO2 voltage selection 010b = LSW1 ON/OFF control 011b = LSW2 ON/OFF control 100b = LSW3 ON/OFF control 101b-111b = LSW4 ON/OFF control

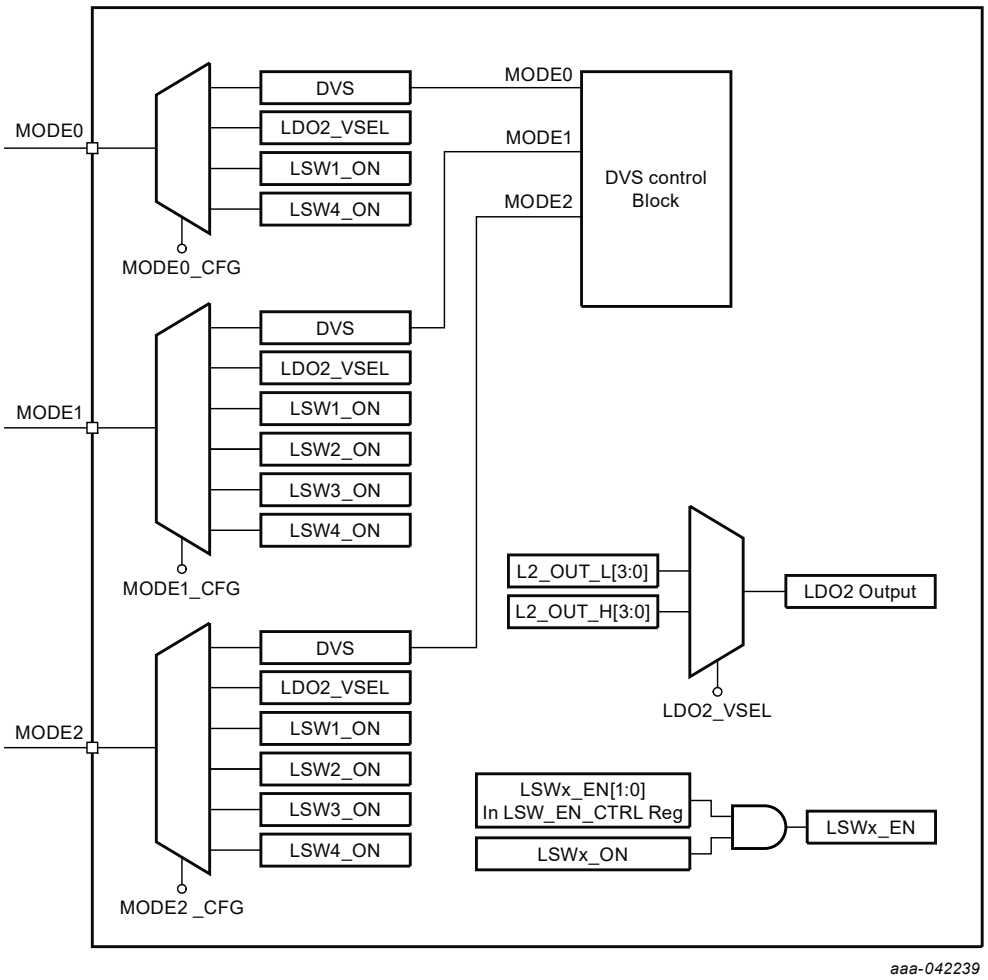

Figure 22. MODE[2:0] pins multiplex

7.9 Interrupt management

The IRQ_B pin is an interface to the software-controlled system that indicates any interrupt bit status change of INT1 register. The IRQ_B pin is pulled low when any unmasked interrupt bit status is changed, and it is released high once application processor read INT1 register.

The INT1 bits are latched to 1 whenever corresponding INT1_STATUS1 bit is changed and the latch is cleared when the INT1 register is read. The INT1_MASK bits are used to enable or disable individual interrupt bits of INT1 register. The INT1_STATUS1 register indicates the current status and is not latched.

All information provided in this document is subject to legal disclaimers.

© 2025 NXP B.V. All rights reserved.

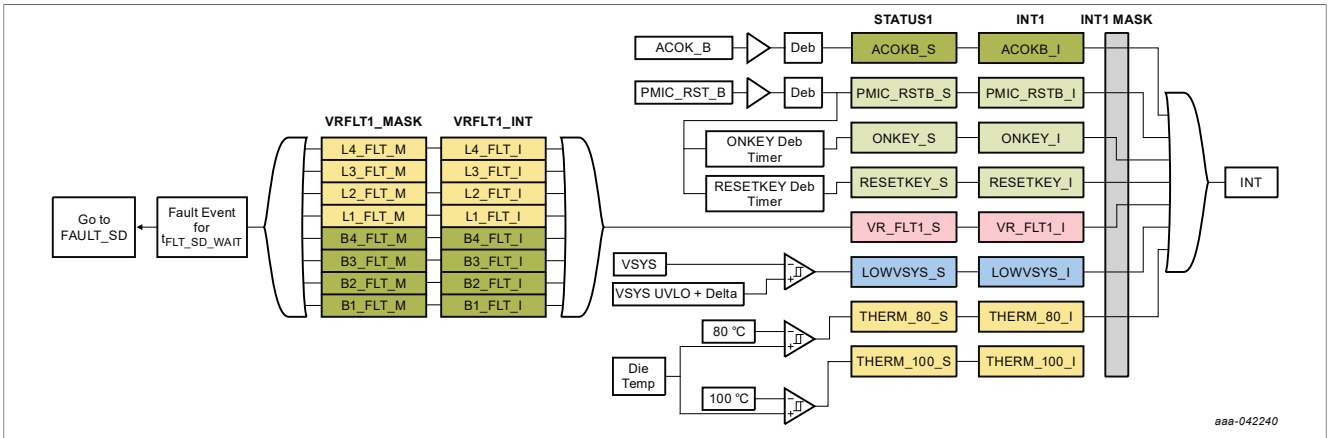

Figure 23. Interrupt diagram

8 Software interface

PCA9460 implements I²C-bus slave interface and it interfaces with the host system. The host processor can issue commands, monitor status and receive response through this bus. A detailed description of the I²C-bus specification, with applications, is given in UM10204, https://www.nxp.com/docs/en/user-guide/UM10204.pdf[Ref. 4]. PCA9460 supports I²C-bus data transfers in Standard-mode (100 kbit/s), Fast-mode (400 kbit/s) and Fast-mode plus (1 Mbit/s). See Table 19.

Table 19. I²C address at Power-On Reset

	7-bit Slave Address	8-bit Write Address	8-bit Read Address
Default	0x32, 0b 011 0010	0x64, 0b 0110 0100	0x65, 0b 0110 0101
OTP1	0x33, 0b 011 0011	0x66, 0b 0110 0110	0x67, 0b 0110 0111
OTP2	0x36, 0b 011 0110	0x6C, 0b 0110 1100	0x6D, 0b 0110 1101
OTP3	0x37, 0b 011 0111	0x6E, 0b 0110 1110	0x6F, 0b 0110 1111

I²C register reset type

There are two type of registers: type O and type S. The differences between them relates to the different conditions that RESET the contents and its corresponding functionality to the default values for those specific registers. Those conditions are shown below for each register type. For more details on whether a register is type S or O refer to Table 20.

Type S : (VSYS < V_{SYS_UVLO}) || (VINT_POK) || (SW_RST_KEY = 0x09)

Type O : (VSYS < V_{SYS_UVLO}) || (VINT_POK) || (Cold Reset) || (Warm Reset) || (Falling edge of PMIC_ON_SRC) || (SW_RST_KEY=0x05) || (SW_RST_KEY=0x09) || (FAULT_SD) || (Thermal SD)

8.1 Register map

Table 20. Register map

Add	Name	Description								R/W	Reset Type	Reset Value[1]		
		B7	B6	B5	B4	B3	B2	B1	B0			A	B	C
00h	Device_ID	CHIP_ID				REV_ID				R	S	0x32	0x32	0x32
01h	OTP_Ver	OTP_VER								R	S	0x00	0x10	0x20
02h	INT1	ACOKB_I	PMIC_RSTB_I	ONKEY_I	RESETKEY_I	VR_FLT1_I	LOWVSYS_I	THERM_80_I	THERM_100_I	R/C	S	0x00	0x00	0x00

All information provided in this document is subject to legal disclaimers.

© 2025 NXP B.V. All rights reserved.

Table 20. Register map...*continued*

Add	Name	Description								R/W	Reset Type	Reset Value[1]		
		B7	B6	B5	B4	B3	B2	B1	B0			A	B	C
03h	INT1_MSK	ACOKB_M	PMIC_RSTB_M	ONKEY_M	RESETKEY_M	VR_FLT1_M	LOWVSYS_M	THERM_80_M	THERM_100_M	R/W	S	0xFF	0xFF	0xFF
04h	INT1_STATUS	ACOKB_S	PMIC_RSTB_S	ONKEY_S	RESETKEY_S	VR_FLT12S	LOWVSYS_S	THERM_80_S	THERM_100_S	R	S	0x00	0x00	0x00
05h	VRFLT1_INT	L4_FLT_I	L3_FLT_I	L2_FLT_I	L1_FLT_I	B4_FLT_I	B3_FLT_I	B2_FLT_I	B1_FLT_I	R/W/C	S	0x00	0x00	0x00
06h	VRFLT1_MASK	L4_FLT_M	L3_FLT_M	L2_FLT_M	L1_FLT_M	B4_FLT_M	B3_FLT_M	B2_FLT_M	B1_FLT_M	R/W	S	0xFF	0xFF	0xFF
07h	PWR_STATE	PWR_STAT				PWR_MODE				R	S	0x00	0x00	0x00
08h	RESET_CTRL	WDOGB_CFG		PMIC_RST_CFG		TRE START	RSVD	RSVD	RSVD	R/W	S	0x20	0x20	0x20
09h	SW_RST	SWRST								R/W	O	0x00	0x00	0x00
0Ah	PWR_SEQ_CTRL	PMIC_RST_B_ON	ACOK_B_ON	PMIC_RST_B_DEB	ACOK_B_OSTMR	PSQ_TON_STEP		PSQ_TOFF_STEP		R/W	S	0x06	0x06	0x06
0Bh	SYS_CFG1	LOW_VSYS		STANDBY_CFG	RESETKEY_TIMER			TFLT_SD_WAIT	THERM_SD_DIS	R/W	O	0x54	0x54	0x54
0Ch	SYS_CFG2	ONKEY_TIMER		PWR_SAVE		RSVD	POK_PU	VSYS_UVLO		R/W	S	0x71	0x71	0x71
0Dh	MODEPIN_CFG	MODE0_CFG		MODE1_CFG			MODE2_CFG			R/W	O	0x00	0x00	0x00
0Eh-0Fh	RESERVED	RSVD	RSVD	RSVD	RSVD	RSVD	RSVD	RSVD	RSVD			0x00	0x00	0x00
10h	BUCK1CTRL	RSVD	RSVD	B1_LPMODE		B1_AD	B1_FPWM	B1_ENMODE		R/W	O	0x39	0x39	0x39
11h	BUCK1OUT	RSVD	B1_OUT							R/W	O	0x30	0x30	X030
12h	BUCK23_DVS_CFG1	B2_DVS_UP	B2_DVS_DN	B3_DVS_UP	B3_DVS_DN	MODE_PULSE	SMART_MODE	MODE2_EN	BUCK_SEL	R/W	O	0x00	0x00	0x00
13h	BUCK23_DVS_CFG2	B2_DVS_CTRL		B3_DVS_CTRL		RSVD	RSVD	RSVD	RSVD	R/W	O	0x00	0x00	0x00
14h	BUCK2CTRL	B2_RAMP		B2_LPMODE		B2_AD	B2_FPWM	B2_ENMODE		R/W	O	0x79	0x79	0x79
15h	BUCK2OUT_DVS0	RSVD	B2_DVS0							R/W	O	0x20	0x20	0x20
16h	BUCK2OUT_DVS1	RSVD	B2_DVS1							R/W	O	0x18	0x18	0x18
17h	BUCK2OUT_DVS2	RSVD	B2_DVS2							R/W	O	0x18	0x18	0x18
18h	BUCK2OUT_DVS3	RSVD	B2_DVS3							R/W	O	0x18	0x18	0x18
19h	BUCK2OUT_DVS4	RSVD	B2_DVS4							R/W	O	0x18	0x18	0x18
1Ah	BUCK2OUT_DVS5	RSVD	B2_DVS5							R/W	O	0x18	0x18	0x18
1Bh	BUCK2OUT_DVS6	RSVD	B2_DVS6							R/W	O	0x18	0x18	0x18
1Ch	BUCK2OUT_DVS7	RSVD	B2_DVS7							R/W	O	0x18	0x18	0x18
1Dh	BUCK2OUT_STBY	RSVD	B2_DVS_STBY							R/W	O	0x18	0x18	0x18
1Eh	RESERVED	RSVD	RSVD	RSVD	RSVD	RSVD	RSVD	RSVD	RSVD			0x00	0x00	0x00
1Fh	BUCK2OUT	RSVD	B2_MAX_LIMIT							R/W	O	0x38	0x38	X038

All information provided in this document is subject to legal disclaimers.

© 2025 NXP B.V. All rights reserved.

Table 20. Register map...*continued*

Add	Name	Description								R/W	Reset Type	Reset Value[1]		
		B7	B6	B5	B4	B3	B2	B1	B0			A	B	C
	_MAX_LIMIT													
20h	BUCK2OUT _MIN_LIMIT	RSVD	B2_MIN_LIMIT							R/W	O	0x08	0x08	0x08
21h	BUCK3CTRL	B3_RAMP		B3_LPMODE		B3_AD	B3 _FPWM	B3_ENMODE		R/W	O	0x79	0x79	0x79
22h	BUCK3OUT _DVS0	RSVD	B3_DVS0							R/W	O	0x20	0x20	0x20
23h	BUCK3OUT _DVS1	RSVD	B3_DVS1							R/W	O	0x20	0x20	0x20
24h	BUCK3OUT _DVS2	RSVD	B3_DVS2							R/W	O	0x20	0x20	0x20
25h	BUCK3OUT _DVS3	RSVD	B3_DVS3							R/W	O	0x20	0x20	0x20
26h	BUCK3OUT _DVS4	RSVD	B3_DVS4							R/W	O	0x20	0x20	0x20
27h	BUCK3OUT _DVS5	RSVD	B3_DVS5							R/W	O	0x20	0x20	0x20
28h	BUCK3OUT _DVS6	RSVD	B3_DVS6							R/W	O	0x20	0x20	0x20
29h	BUCK3OUT _DVS7	RSVD	B3_DVS7							R/W	O	0x20	0x20	0x20
2Ah	BUCK3OUT _STBY	RSVD	B3_DVS_STBY							R/W	O	0x20	0x20	0x20
2Bh	RESERVED	RSVD	RSVD	RSVD	RSVD	RSVD	RSVD	RSVD	RSVD			0x00	0x00	0x00
2Ch	BUCK3OUT _MAX_LIMIT	RSVD	B3_MAX_LIMIT							R/W	O	0x38	0x38	0x38
2Dh	BUCK3OUT _MIN_LIMIT	RSVD	B3_MIN_LIMIT							R/W	O	0x08	0x08	0x08
2Eh	BUCK4_CTRL		RSVD	B4_LPMODE		B4_AD	B4 _FPWM	B4_ENMODE		R/W	O	0x39	0x39	0x39
2Fh	BUCK4OUT	RSVD	B4_OUT							R/W	O	0x14	0x14	0x18
30h	LDO1_CFG	L1_CSEL		L1_LLSEL		L1_LPMODE		L1_ENMODE		R/W	O	0x9D	0x9D	0x9D
31h	LDO1_OUT	L1_AD	L1_INL1 _MDET	L1_INL1 _VSEL	L1_OUT					R/W	O	0x8A	0x80	0x8C
32h	LDO2_CFG	RSVD	RSVD	RSVD	L2_AD	RSVD	RSVD	L2_ENMODE		R/W	O	0x11	0x11	0x11
33h	LDO2_OUT_L			L2_OUT_L						R/W	O	0x32	0x32	0x32
34h	LDO2_OUT_H			L2_OUT_H						R/W	O	0x14	0x14	X014
35h	LDO3_CFG	RSVD	RSVD	RSVD	L3_AD	RSVD	RSVD	L3_ENMODE		R/W	O	0x11	0x11	0x11
36h	LDO3_OUT			L3_OUT						R/W	O	0x32	0x32	X032
37h	LDO4_CFG	RSVD	RSVD	RSVD	L4_AD	RSVD	RSVD	L4_ENMODE		R/W	O	0x11	0x11	X011
38h	LDO4_OUT			L4_OUT						R/W	O	0x14	0x14	0x14
39h	LDOSNVS _CFG	LSNVS _AD	LS_EN MODE	L_SNVS_OUT						R/W	O	0xEC	0xEC	0xEC
3Ah-3Fh	RESERVED	RSVD	RSVD	RSVD	RSVD	RSVD	RSVD	RSVD	RSVD			0x00	0x00	0x00
40h	LSW1_CTRL	LSW1 _CFG	RSVD	RSVD	LSW1_AD	RSVD	RSVD	LSW1_EN		R/W	O	0x11	0x11	0x11
41h	LSW2_CTRL	LSW2 _CFG	RSVD	RSVD	LSW2_AD	RSVD	RSVD	LSW2_EN		R/W	O	0x11	0x11	0x11
42h	LSW3_CTRL	LSW3	RSVD	RSVD	LSW3_AD	RSVD	RSVD	LSW3_EN		R/W	O	0x11	0x11	0x11

All information provided in this document is subject to legal disclaimers.

© 2025 NXP B.V. All rights reserved.

Table 20. Register map...*continued*

Add	Name	Description								R/W	Reset Type	Reset Value[1]		
		B7	B6	B5	B4	B3	B2	B1	B0			A	B	C
		_CFG												
43h	LSW4_CTRL	LSW4 _CFG	RSVD	RSVD	LSW4_AD	RSVD	RSVD	LSW4_EN		R/W	O	0x11	0x11	0x11
44h	LED1_CTRL	LED1_EN		RSVD	LED1_BRT					R/W	O	0x00	0x00	0x00
45h	LED2_CTRL	LED2_EN		RSVD	LED2_BRT					R/W	O	0x00	0x00	0x00
46h	LED3_CTRL	LED3_EN		RSVD	LED3_BRT					R/W	O	0x00	0x00	0x00
47h	LED4_CTRL	LED4_EN		RSVD	LED4_BRT					R/W	O	0x00	0x00	0x00
48h	LED_P1 _RAMP	P1_UP_STEP		P1_UP_DLY		P1_DN_STEP		P1_DN_DLY		R/W	O	0x00	0x00	0x00
49h	LED_P1 _BLNK	LEDTON1				LEDTOFF1				R/W	O	0x00	0x00	0x00
4Ah	LED_P2 _RAMP	P2_UP_STEP		P2_UP_DLY		P2_DN_STEP		P2_DN_DLY		R/W	O	0x00	0x00	0x00
4Bh	LED_P2 _BLNK	LEDTON2				LEDTOFF2				R/W	O	0x00	0x00	0x00
4Ch-4Dh	RESERVED	RSVD	RSVD	RSVD	RSVD	RSVD	RSVD	RSVD	RSVD			0x00	0x00	0x00
4Eh	REG_LOCK	UNLOCK_KEY								R/W	O	0x00	0x00	0x00
Note1. A = PCA9460A, B = PCA9460B, C = PCA9460C														

[1] A = PCA9460, B = PCA9460B, C = PCA9460C

8.2 Register details

8.2.1 Device_ID

The device identification code stores a unique identifier for each version and/or revision of a PCA9460, so that the connected processor recognizes it automatically. This is a READ ONLY register.

Table 21. Device_ID register (address 00h) bit allocation

Bit	7	6	5	4	3	2	1	0
Symbol	CHIP_ID				CHIP_REV			
Reset	0	0	1	1	0	0	1	0
Access	R	R	R	R	R	R	R	R

Table 22. Device_ID register (address 00h) bit descriptions

Bit	Symbol	Description
7 to 4	CHIP_ID	Chip ID **0011 —** PCA9460 (default)
3 to 0	CHIP_REV	Chip Revision **0010 —** Revision 2 (default)

8.2.2 OTP_VER

OTP version information

All information provided in this document is subject to legal disclaimers.

© 2025 NXP B.V. All rights reserved.

Table 23. OTP_VER register (address 01h) bit allocation

Bit	7	6	5	4	3	2	1	0
Symbol	OTP_VER				OTP_REV			
Reset[1]	—	—	—	—	—	—	—	—
Access	R	R	R	R	R	R	R	R

[1] The reset value depends on the specific otp version as shown in Table 24.

Table 24. OTP_VER register (address 01h) bit descriptions

Bit	Symbol	Description
7 to 4	OTP_VER	OTP version for each PCA9460 variance **0000 —** PCA9460A **0001 —** PCA9460B **0010 —** PCA9460C … **1111 —** Reserved
3 to 0	OTP_REV	OTP minor change update **0000 —** revision 0 **0001 —** revision 1 … **1111 —** Reserved

8.2.3 INT1

Interrupt source register. Either of unmasked register bits is set to 1, IRQB pin is pulled low. This register is Read and Clear.

Table 25. INT1 register (address 02h) bit allocation

Bit	7	6	5	4	3	2	1	0
Symbol	ACOKB_I	PMIC_ RSTB_I	ONKEY_I	RESETKEY_I	VR_FLT1_I	LOWVSYS_I	THERM_80_I	THERM_ 100_I
Reset	0	0	0	0	0	0	0	0
Access	R/C	R/C	R/C	R/C	R/C	R/C	R/C	R/C

Table 26. INT1 register (address 02h) bit descriptions

Bit	Symbol	Description
7	ACOKB_I	ACOKB interrupt **0 —** ACOKB_S bit has not been changed (default) **1 —** ACOKB_S bit has been changed
6	PMIC_RSTB_I	PMIC_RSTB_I interrupt **0 —** PMIC_RSTB_S bit has not been changed (default) **1 —** PMIC_RSTB_S bit has been changed
5	ONKEY_I	ON Key timer interrupt **0 —** ONKEY_S bit has not been changed (default) **1 —** ONKEY_S bit has been changed
4	RESETKEY_I	RESET Key timer interrupt **0 —** RESETKEY_S bit has not been changed (default) **1 —** RESETKEY_S bit has been changed

All information provided in this document is subject to legal disclaimers.

© 2025 NXP B.V. All rights reserved.

Table 26. INT1 register (address 02h) bit descriptions*...continued*

Bit	Symbol	Description
3	VR_FLT1_I	Voltage regulator Group1 Fault **0 —** VR_FLT1_S bit has not been changed (default) **1 —** VR_FLT1_S bit has been changed
2	LOWVSYS_I	Low-SYS Voltage interrupt **0 —** LOWVSYS_S bit has not been changed (default) **1 —** LOWVSYS_S bit has been changed
1	THERM_80_I	Die temperature 80 °C interrupt **0 —** THERM_80_S bit has not been changed (default) **1 —** THERM_80_S bit has been changed
0	THERM_100_I	Die temperature 100 °C interrupt **0 —** THERM_100_S bit has not been changed (default) **1 —** THERM_100_S bit has been changed

8.2.4 INT1_MASK

Table 27. INT1_MASK register (address 03h) bit allocation

Bit	7	6	5	4	3	2	1	0
Symbol	ACOKB_M	PMIC_ RSTB_M	ONKEY_M	RESETKEY_ M	VR_FLT1_M	LOWVSYS_M	THERM_ 80_M	THERM_ 100_M
Reset	1	1	1	1	1	1	1	1
Access	R/W	R/W	R/W	R/W	R/W	R/W	R/W	R/W

Table 28. INT1_MASK register (address 03h) bit descriptions

Bit	Symbol	Description
7	ACOKB_M	ACOKB_I interrupt mask bit **0 —** Enable ACOKB_I interrupt **1 —** Mask ACOKB_I interrupt (default)
6	PMIC_RSTB_M	PMIC_RSTB_I interrupt mask bit **0 —** Enable PMIC_RSTB_I interrupt **1 —** Mask PMIC_RSTB_I interrupt (default)
5	ONKEY_M	ONKEY_I interrupt mask bit **0 —** Enable ONKEY_I interrupt **1 —** Mask ONKEY_I interrupt (default)
4	RESETKEY_M	RESETKEY_I interrupt mask bit **0 —** Enable RESETKEY_I interrupt **1 —** Mask RESETKEY_I interrupt (default)
3	VR_FLT1_M	VR_FLT1I interrupt mask bit **0 —** Enable VR_FLT1I interrupt **1 —** Mask VR_FLT1I interrupt (default)
2	LOWVSYS_M	LOWVINI interrupt mask bit **0 —** Enable LOWVINI interrupt **1 —** Mask LOWVINI interrupt (default)
1	THERM_80_M	THERM_80 interrupt mask bit **0 —** Enable THERM_80 interrupt **1 —** Mask THERM_80 interrupt (default)
0	THERM_100_M	THERM_100 interrupt mask bit **0 —** Enable THERM_100 interrupt

All information provided in this document is subject to legal disclaimers.

© 2025 NXP B.V. All rights reserved.

Table 28. INT1_MASK register (address 03h) bit descriptions*...continued*

Bit	Symbol	Description
		1 — Mask THERM_100 interrupt (default)

8.2.5 INT1_STATUS

STATUS register shows current status. Any status bit change sets corresponding interrupt bit to 1.

Table 29. INT1_STATUS register (address 04h) bit allocation

Bit	7	6	5	4	3	2	1	0
Symbol	ACOKB_S	PMIC_ RSTB_S	ONKEY_S	RESETKEY_ S	VR_FLT1_S	LOWVSYS_S	THERM_ 80_S	THERM_ 100_S
Reset	—	—	—	—	—	—	—	—
Access	R	R	R	R	R	R	R	R

Table 30. INT1_STATUS register (address 04h) bit descriptions

Bit	Symbol	Description
7	ACOKB_S	ACOK_B pin status after debounce time **0 —** ACOK_B pin is low **1 —** ACOK_B pin is high
6	PMIC_RSTB_S	PMIC_RST_B pin status **0 —** PMIC_RST_B pin is low **1 —** PMIC_RST_B pin is high
5	ONKEY_S	ONKEY status bit **0 —** PMIC_RST_B pin is not low for ONKEY timer **1 —** PMIC_RST_B pin is low for ONKEY timer
4	RESETKEY_S	RESETKEY status bit **0 —** PMIC_RST_B pin is not low for RESETKEY timer **1 —** PMIC_RST_B pin is low for RESETKEY timer
3	VR_FLT1_S	Voltage Regulator Fault status, See 0x40 Register. **0 —** All voltage regulators are OK **1 —** Either of voltage regulators is in Fault state
2	LOWVSYS_S	VSYS low voltage status **0 —** Enable LOWVINI interrupt **1 —** Mask LOWVINI interrupt
1	THERM_80_S	Die temperature 80 °C status **0 —** Die temperature is below 80 °C **1 —** Die temperature is above 80 °C
0	THERM_100_S	Die temperature 100 °C status **0 —** Die temperature is below 100 °C **1 —** Die temperature is above 100 °C

8.2.6 VRFLT1_INT

Voltage regulator fault interrupt register. It is latched to 1 once corresponding regulator is detected until overwriting "1" to the register. If "1" is overwritten, the corresponding bit is newly updated by current status.

All information provided in this document is subject to legal disclaimers.

© 2025 NXP B.V. All rights reserved.

Table 31. VRFLT1_INT register (address 05h) bit allocation

Bit	7	6	5	4	3	2	1	0
Symbol	L4_FLT_I	L3_FLT_I	L2_FLT_I	L1_FLT_I	B4_FLT_I	B3_FLT_I	B2_FLT_I	B1_FLT_I
Reset	0	0	0	0	0	0	0	0
Access	R/W/C	R/W/C	R/W/C	R/W/C	R/W/C	R/W/C	R/W/C	R/W/C

Table 32. VRFLT1_INT register (address 05h) bit descriptions

Bit	Symbol	Description
7	L4_FLT_I	LDO4 Fault interrupt, deglitched with t_{DEB_POKB} **0 —** LDO4 output is good or LDO4 is OFF (default) **1 —** LDO4 output falls below 80 % of target
6	L3_FLT_I	LDO3 Fault interrupt, deglitched with t_{DEB_POKB} **0 —** LDO3 output is good or LDO3 is OFF (default) **1 —** LDO3 output falls below 80 % of target
5	L2_FLT_I	LDO2 Fault interrupt, deglitched with t_{DEB_POKB} **0 —** LDO2 output is good or LDO2 is OFF (default) **1 —** LDO2 output falls below 80 % of target
4	L1_FLT_I	LDO1 Fault interrupt, deglitched with t_{DEB_POKB} **0 —** LDO1 output is good or LDO1 is OFF (default) **1 —** LDO1 output falls below 80 % of target
3	B4_FLT_I	BUCK4 Fault interrupt, deglitched with t_{DEB_POKB} **0 —** BUCK4 output is good or BUCK4 is OFF (default) **1 —** BUCK4 output is below 80 %
2	B3_FLT_I	BUCK3 Fault interrupt, deglitched with t_{DEB_POKB} **0 —** BUCK3 output is good or BUCK3 is OFF (default) **1 —** BUCK3 output falls below 80 % of target
1	B2_FLT_I	BUCK2 Fault interrupt, deglitched with t_{DEB_POKB} **0 —** BUCK2 output is good or BUCK2 is OFF (default) **1 —** BUCK2 output falls below 80 % of target
0	B1_FLT_I	BUCK1 Fault interrupt, deglitched with t_{DEB_POKB} **0 —** BUCK1 output is good or BUCK1 is OFF (default) **1 —** BUCK1 output falls below 80 % of target

8.2.7 VRFLT1_MASK

VR fault mask bit. Once the bit is masked, PCA9460 doesn't enter Fault shutdown even if fault condition of corresponding regulator happens

Table 33. VRFLT1_MASK register (address 06h) bit allocation

Bit	7	6	5	4	3	2	1	0
Symbol	L4_FLT_M	L3_FLT_M	L2_FLT_M	L1_FLT_M	B4_FLT_M	B3_FLT_M	B2_FLT_M	B1_FLT_M
Reset	1	1	1	1	1	1	1	1
Access	R/W	R/W	R/W	R/W	R/W	R/W	R/W	R/W

Table 34. VRFLT1_MASK register (address 06h) bit descriptions

Bit	Symbol	Description
7	L4_FLT_M	LDO4 FLT mask

All information provided in this document is subject to legal disclaimers.

© 2025 NXP B.V. All rights reserved.

Table 34. VRFLT1_MASK register (address 06h) bit descriptions*...continued*

Bit	Symbol	Description
		0 — Unmask **1 —** Masked (default)
6	L3_FLT_M	LDO3 FLT mask **0 —** Unmask **1 —** Masked (default)
5	L2_FLT_M	LDO2 FLT mask **0 —** Unmask **1 —** Masked (default)
4	L1_FLT_M	LDO1 FLT mask **0 —** Unmask **1 —** Masked (default)
3	B4_FLT_M	BUCK4 FLT mask **0 —** Unmask **1 —** Masked (default)
2	B3_FLT_M	BUCK3 FLT mask **0 —** Unmask **1 —** Masked (default)
1	B2_FLT_M	BUCK2 FLT mask **0 —** Unmask **1 —** Masked (default)
0	B1_FLT_M	BUCK1 FLT mask **0 —** Unmask **1 —** Masked (default)

8.2.8 PWR_STATE

Power state register shows current PCA9460 power states and modes.

Table 35. PWR_STATE register (address 07h) bit allocation

Bit	7	6	5	4	3	2	1	0
Symbol	PWR_STAT				PWR_MODE			
Reset	0	0	0	0	0	0	0	0
Access	R	R	R	R	R	R	R	R

Table 36. PWR_STATE register (address 07h) bit descriptions

Bit	Symbol	Description
7 to 4	PWR_STAT	Current PCA9460 STATES **0000 —** OFF (default) **0100 —** SNVS **0101 —** PWRUP **1000 —** RUN **1100 —** PWRDN **1110 —** FAULT_SD **others —** Reserved
3 to 0	PWR_MODE	Current PCA9460 MODE, only effective at RUN state **0000 —** Active mode – DVS0 (default) **0001 —** Active mode – DVS1 **0010 —** Active mode – DVS2

All information provided in this document is subject to legal disclaimers.

© 2025 NXP B.V. All rights reserved.

Table 36. PWR_STATE register (address 07h) bit descriptions*...continued*

Bit	Symbol	Description
		0011 — Active mode – DVS3 **0100 —** Active mode – DVS4 **0101 —** Active mode – DVS5 **0110 —** Active mode – DVS6 **0111 —** Active mode – DVS7 **1000 —** STANDBY MODE **1010 —** DP_STANDBYMODE **others —** Reserved

8.2.9 RESET_CTRL

Reset behavior configuration register

Table 37. RESET_CTRL register (address 08h) bit allocation

Bit	7	6	5	4	3	2	1	0
Symbol	WDOGB_CFG		PMIC_RST_CFG		TRESTART	RSVD		
Reset	0	0	1	0	0	0	0	0
Access	R/W	R/W	R/W	R/W	R/W	R/W	R/W	R/W

Table 38. RESET_CTRL register (address 08h) bit descriptions

Bit	Symbol	Description
7 to 6	WDOGB_CFG	When WDOG_B is asserted to low, PMIC reset behavior **00 —** WDOG_B reset is disabled (default) **01 —** Warm reset, POR_B pin is asserted low for 20 ms **10 and 11 —** Cold Reset, all voltage regulators are recycled
5 to 4	PMIC_RST_CFG	When PMIC_RST_B is asserted to low, PMIC reset behavior **00 —** PMIC_RST_B reset is disabled **01 —** Warm Reset, POR_B pin is asserted low for 20 ms **10 and 11 —** Cold Reset, all voltage regulators are recycled (default)
3	TRESTART	Time to stay regulators off during Cold reset **0 —** 250 ms (default) **1 —** 500 ms
2 to 0	RSVD	Reserved

8.2.10 SW_RST

Software reset register

Table 39. SW_RST register (address 09h) bit allocation

Bit	7	6	5	4	3	2	1	0
Symbol	SW_RST_KEY							
Reset	0	0	0	0	0	0	0	0
Access	R/W	R/W	R/W	R/W	R/W	R/W	R/W	R/W

All information provided in this document is subject to legal disclaimers.

© 2025 NXP B.V. All rights reserved.

Table 40. SW_RST register (address 09h) bit descriptions

Bit	Symbol	Description
7 to 0	SW_RST_KEY	Software reset register. This register is read back to “0x00” right after writing the value. **0000 0000 —** No action (default) **0000 0101 —** Reset O-type registers to default value **0000 1001 —** Reset O-type registers and S-type registers **0000 1110 —** Cold reset (Power recycle all regulators) **0010 0011 —** Warm Reset (Toggle POR_B for 20 ms) **1110 1110 —** PMIC digital reset (Debug purpose only) **others —** Forbidden

8.2.11 PWR_SEQ_CTRL

Debounce timer configuration register

Table 41. PWR_SEQ_CTRL register (address 0Ah) bit allocation

Bit	7	6	5	4	3	2	1	0
Symbol	PMIC_RST_B_ON	ACOK_B_ON	PMIC_RST_B_DEB	ACOK_B_OSTMR	PSQ_TON_STEP		PSQ_ TOFF_STEP	
Reset	0	0	0	0	0	1	1	0
Access	R/W	R/W	R/W	R/W	R/W	R/W	R/W	R/W

Table 42. PWR_SEQ_CTRL register (address 0Ah) bit descriptions

Bit	Symbol	Description
7	PMIC_RST_B_ON	Configure PMIC_RST_B pin as Power ON source **0 —** Mask (default) **1 —** Power ON Source
6	ACOK_B_ON	Configure ACOK_B pin as Power ON source **0 —** Mask (default) **1 —** Power ON Source
5	PMIC_RST_B_ DEB	Debounce time for PMIC_RST_B pin for falling edge. (rising edge doesn’t have debounce time) **0 —** 20 ms (default) **1 —** 100 ms
4	ACOK_B_OSTMR	Oneshot timer for ACOK_B, Oneshot timer works only at SNVS state **0 —** 2.5 sec (default) **1 —** 5 sec
3 to 2	PSQ_TON_STEP	Time step configuration during power on sequence **00 —** 1 ms **01 —** 2 ms (default) **10 —** 4 ms **11 —** 8 ms
1 to 0	PSQ_TOFF_STEP	Time step configuration during power down sequence **00 —** 2 ms **01 —** 4 ms **10 —** 8 ms (default) **11 —** 16 ms

8.2.12 SYS_CFG1

VSYS_UVLO and LOW VSYS configuration register

All information provided in this document is subject to legal disclaimers.

© 2025 NXP B.V. All rights reserved.

Table 43. SYS_CFG1 register (address 0Bh) bit allocation

Bit	7	6	5	4	3	2	1	0
Symbol	LOW_VSYS		STANDBY_ CFG	RESETKEY_TIMER			TFLT_ SD_WAIT	THERM_ SD_DIS
Reset	0	1	0	1	0	1	0	0
Access	R/W	R/W	R/W	R/W	R/W	R/W	R/W	R/W

Table 44. SYS_CFG1 register (address 0Bh) bit descriptions

Bit	Symbol	Description
7 to 6	LOW_VSYS	Low VSYS threshold above V_{SYS_UVLO} **00 —** 100 mV **01 —** 200 mV (default) **10 —** 300 mV **11 —** 400 mV
5	STANDBY_CFG	Mode configuration bit when PMIC_STBY_REQ pin is High **0 —** STANDBY mode (default) **1 —** DPSTANDBY mode
4 to 2	RESETKEY_ TIMER	RESETKEY timer configuration after PMIC_RST_B pin falls low **000 —** 100 ms **001 —** 1 sec **010 —** 2 sec **011 —** 4 sec **100 —** 6 sec **101 —** 8 sec (default) **110 —** 10 sec **111 —** 12 sec
1	TFLT_SD_WAIT	Wait time for AP action when regulator fault occurs **0 —** 100 ms (default) **1 —** 20 µs
0	THERM_SD_DIS	Thermal shutdown disable bit **0 —** Enable Thermal shutdown (default) **1 —** Disable Thermal shutdown

8.2.13 SYS_CFG2

ONKEY timer, power save mode and VSYS UVLO configuration register

Table 45. SYS_CFG2 register (address 0Ch) bit allocation

Bit	7	6	5	4	3	2	1	0
Symbol	ONKEY_TIMER		PWR_SAVE		RSVD	POK_PU	VSYS_UVLO	
Reset	0	1	1	1	0	0	0	1
Access	R/W	R/W	R/W	R/W	R/W	R/W	R/W	R/W

Table 46. SYS_CFG2 register (address 0Ch) bit descriptions

Bit	Symbol	Description
7 to 6	ONKEY_TIMER	ONKEY timer configuration after PMIC_RST_B pin falls low **00 —** 1 sec **01 —** 2 sec (default)

All information provided in this document is subject to legal disclaimers.

© 2025 NXP B.V. All rights reserved.

Table 46. SYS_CFG2 register (address 0Ch) bit descriptions*...continued*

Bit	Symbol	Description
		10 — 4 sec **11 —** 8 sec
5 to 4	PWR_SAVE	Power save mode (Disabling High accuracy BG and Thermal shutdown) **00 —** Use Low Iq BG and enable Thermal shutdown **01 —** Power save mode at STANDBY/DPSTANDBY mode **10 —** Power save mode at DPSTANDBY mode **11 —** Normal Power mode (default)
3	RSVD	Reserved
2	POK_PU	POK reference during power up **0 —** POK is reference to turn on next power group (default) **1 —** POK is ignored during power up
1 to 0	VSYS_UVLO	VSYS UVLO threshold, rising threshold **00 —** 2.65 V **01 —** 2.85 V (default) **10 —** 3.0 V **11 —** 3.3V

8.2.14 MODEPIN_CFG

MODE0, MODE1, MODE2 pin control configuration

Table 47. MODEPIN_CFG register (address 0Dh) bit allocation

Bit	7	6	5	4	3	2	1	0
Symbol	MODE0_CFG		MODE1_CFG			MODE2_CFG		
Reset	0	0	0	0	0	0	0	0
Access	R/W	R/W	R/W	R/W	R/W	R/W	R/W	R/W

Table 48. MODEPIN_CFG register (address 0Dh) bit descriptions

Bit	Symbol	Description
7 to 6	MODE0_CFG	MODE0 pin configuration **00 —** DVS control (default) **01 —** LDO2 voltage selection **10 —** LSW1 ON/OFF control **11 —** LSW4 ON/OFF control
5 to 3	MODE1_CFG	MODE1 pin configuration **000 —** DVS control (default) **001 —** LDO2 voltage selection **010 —** LSW1 ON/OFF control **011 —** LSW2 ON/OFF control **100 —** LSW3 ON/OFF control **101 and 111 —** LSW4 ON/OFF control
2 to 0	MODE2_CFG	MODE2 pin configuration **000 —** DVS control (default) **001 —** LDO2 voltage selection **010 —** LSW1 ON/OFF control **011 —** LSW2 ON/OFF control **100 —** LSW3 ON/OFF control **101 and 111 —** LSW4 ON/OFF control

All information provided in this document is subject to legal disclaimers.

© 2025 NXP B.V. All rights reserved.

8.2.15 BUCK1CTRL

BUCK1 control register for Active discharge, FPWM and Enable.

Table 49. BUCK1CTRL register (address 10h) bit allocation

Bit	7	6	5	4	3	2	1	0
Symbol	RSVD		B1_LPMODE		B1_AD	B1_FPWM	B1_ENMODE	
Reset	0	0	1	1	1	0	0	1
Access	R/W	R/W	R/W	R/W	R/W	R/W	R/W	R/W

Table 50. BUCK1CTRL register (address 10h) bit descriptions

Bit	Symbol	Description
7 to 6	RSVD	Reserved
5 to 4	B1_LPMODE	BUCK1 Low power mode **00 —** Automatic transition mode **01 —** Low power mode at STANDBY mode and DPSTANDBY mode **10 —** Low power mode at DPSTANDBY mode **11 —** Normal mode (default)
3	B1_AD	Buck1 Active discharge **0 —** Always disable Active discharge resistor **1 —** Enable Active discharge resistor when regulator is OFF(default)
2	B1_FPWM	Forced PWM mode **0 —** Automatic PFM and PWM mode transition (default) **1 —** Forced PWM mode
1 to 0	B1_ENMODE	Buck1 enable mode **00 —** OFF **01 —** ON at RUN State (default) **10 —** ON at ACTIVE mode or STANDBY mode, OFF at DPSTANDBY **11 —** ON at ACTIVE mode, OFF at STANDBY or DPSTANDBY

8.2.16 BUCK1OUT

BUCK1 output voltage configuration register. This register is protected by Lock key, 0x4E register should be written with unlock key before updating this register.

Table 51. BUCK1OUT register (address 11h) bit allocation

Bit	7	6	5	4	3	2	1	0
Symbol	RSVD	B1_OUT						
Reset	0	0	1	1	0	0	0	0
Access	R/W	R/W	R/W	R/W	R/W	R/W	R/W	R/W

Table 52. BUCK1OUT register (address 11h) bit descriptions

Bit	Symbol	Description
7	RSVD	Reserved
6 to 0	B1_OUT	BUCK1 Output voltage Programmable from 0.60 V to 3.40 V in 25 mV steps **011 0000 —** 1.8 V (default)

All information provided in this document is subject to legal disclaimers.

© 2025 NXP B.V. All rights reserved.

Table 52. BUCK1OUT register (address 11h) bit descriptions*...continued*

Bit	Symbol	Description
		See Table 110

8.2.17 BUCK23_DVS_CFG1

BUCK2, BUCK3 DVS control configuration register

Table 53. BUCK23_DVS_CFG1 register (address 12h) bit allocation

Bit	7	6	5	4	3	2	1	0
Symbol	B2_DVS_UP	B2_DVS_DN	B3_DVS_UP	B3_DVS_DN	MODE_ PULSE	SMART_ MODE	MODE2_EN	BUCK_SEL
Reset	0	0	0	0	0	0	0	0
Access	R/W	R/W	R/W	R/W	R/W	R/W	R/W	R/W

Table 54. BUCK23_DVS_CFG1 register (address 12h) bit descriptions

Bit	Symbol	Description
7	B2_DVS_UP	BUCK2 increment step from MODE[1:0] pins pulse **0 —** 12.5 mV (default) **1 —** 25 mV
6	B2_DVS_DN	BUCK2 decrement step from MODE[1:0] pins pulse **0 —** 12.5 mV (default) **1 —** 25 mV
5	B3_DVS_UP	BUCK3 increment step from MODE[1:0] pins pulse **0 —** 12.5 mV (default) **1 —** 25 mV
4	B3_DVS_DN	BUCK3 decrement step from MODE[1:0] pins pulse **0 —** 12.5 mV (default) **1 —** 25 mV
3	MODE_PULSE	Mode pin pulse width configuration **0 —** 0 µs (default) **1 —** 2 µs
2	SMART_MODE	DVS smart mode configuration **0 —** Smart mode disabled. BUCK2/3 output voltage is determined by BUCKx_OUT_DVSx from MODE[2:0] pin logic combination (default) **1 —** Smart mode enabled
1	MODE2_EN	MODE2 pin enable bit (Only when SMART_MODE bit = 1b) **0 —** Mode2 pin is ignored (default) **1 —** Mode2 pin is used to select BUCK2 or BUCK3 for DVS control
0	BUCK_SEL	BUCK selection in Smart DVS mode when MODE2_EN bit = 0b. **0 —** BUCK2 (default) **1 —** BUCK3

8.2.18 BUCK23_DVS_CFG2

BUCK2, BUCK3 DVS control configuration register

All information provided in this document is subject to legal disclaimers.

© 2025 NXP B.V. All rights reserved.

Table 55. BUCK23_DVS_CFG2 register (address 13h) bit allocation

Bit	7	6	5	4	3	2	1	0
Symbol	B2_DVS_CTRL		B3_DVS_CTRL		RSVD			
Reset	0	0	0	0	0	0	0	0
Access	R/W	R/W	R/W	R/W	R/W	R/W	R/W	R/W

Table 56. BUCK23_DVS_CFG2 register (address 13h) bit descriptions

Bit	Symbol	Description
7 to 6	B2_DVS_CTRL	BUCK2 DVS Control **00 —** DVS control BUCK2OUT_DVS0 Reg through I2C (default) **01 —** DVS control through PMIC_STBY_REQ pin **10 —** DVS control through MODE[2:0] pins in Active mode and the voltage set to BUCK2OUT_STBY when PMIC_STBY_REQ = H **11 —** DVS control through MODE[2:0] pins in RUN state
5 to 4	B3_DVS_CTRL	BUCK3 DVS Control **00 —** DVS control BUCK3OUT_DVS0 Reg through I2C (default) **01 —** DVS control through PMIC_STBY_REQ pin **10 —** DVS control through MODE[2:0] pins in Active mode and the voltage set to BUCK3OUT_STBY when PMIC_STBY_REQ = H **11 —** DVS control through MODE[2:0] pins in RUN state
3 to 0	RSVD	Reserved

8.2.19 BUCK2CTRL

BUCK2 control register for Ramp, DVS control, Active discharge, FPWM and Enable.

Table 57. BUCK2CTRL register (address 14h) bit allocation

Bit	7	6	5	4	3	2	1	0
Symbol	B2_RAMP		B2_LPMODE		B2_AD	B2_FPWM	B2_ENMODE	
Reset	0	1	1	1	1	0	0	1
Access	R/W	R/W	R/W	R/W	R/W	R/W	R/W	R/W

Table 58. BUCK2CTRL register (address 14h) bit descriptions

Bit	Symbol	Description
7 to 6	B2_RAMP	BUCK2 DVS speed **00 —** 25 mV / 1 µs **01 —** 25 mV / 2 µs (default) **10 —** 25 mV / 4 µs **11 —** 25 mV / 8 µs
5 to 4	B2_LPMODE	BUCK2 power mode **00 —** Automatic transition mode **01 —** Low power mode at STANDBY mode and DPSTANDBY mode **10 —** Low power mode at DPSTANDBY mode **11 —** Normal mode (default)
3	B2_AD	BUCK2 Active discharge **0 —** Always disable Active discharge resistor **1 —** Enable Active discharge resistor when regulator is OFF (default)
2	B2_FPWM	Forced PWM mode

All information provided in this document is subject to legal disclaimers.

© 2025 NXP B.V. All rights reserved.

Table 58. BUCK2CTRL register (address 14h) bit descriptions*...continued*

Bit	Symbol	Description
		0 — Automatic PFM and PWM mode transition (default) **1 —** Forced PWM mode
1 to 0	B2_ENMODE	BUCK2 enable mode **00 —** OFF **01 —** ON at RUN State (default) **10 —** ON at ACTIVE mode or STANDBY mode, OFF at DPSTANDBY **11 —** ON at ACTIVE mode, OFF at STANDBY or DPSTANDBY

8.2.20 BUCK2OUT_DVS0

BUCK2 DVS output voltage when MODE[2:0] = 000 && PMIC_STBY_REQ = L

Table 59. BUCK2OUT_DVS0 register (address 15h) bit allocation

Bit	7	6	5	4	3	2	1	0
Symbol	RSVD	B2_DVS0						
Reset	0	0	1	0	0	0	0	0
Access	R/W	R/W	R/W	R/W	R/W	R/W	R/W	R/W

Table 60. BUCK2OUT_DVS0 register (address 15h) bit descriptions

Bit	Symbol	Description
7	RSVD	Reserved
6 to 0	B2_DVS0	BUCK2 DVS0 Output voltage Programmable from 0.60 V to 2.1875 V in 12.5 mV steps **010 0000 —** 1.0 V (default) See Table 109

8.2.21 BUCK2OUT_DVS1

BUCK2 DVS output voltage when MODE[2:0] = 001 && PMIC_STBY_REQ = L

Table 61. BUCK2OUT_DVS1 register (address 16h) bit allocation

Bit	7	6	5	4	3	2	1	0
Symbol	RSVD	B2_DVS1						
Reset	0	0	0	1	1	0	0	0
Access	R/W	R/W	R/W	R/W	R/W	R/W	R/W	R/W

Table 62. BUCK2OUT_DVS1 register (address 16h) bit descriptions

Bit	Symbol	Description
7	RSVD	Reserved
6 to 0	B2_DVS1	BUCK2 DVS1 Output voltage Programmable from 0.60 V to 2.1875 V in 12.5 mV steps **001 1000 —** 0.9 V (default) See Table 109

All information provided in this document is subject to legal disclaimers.

© 2025 NXP B.V. All rights reserved.

8.2.22 BUCK2OUT_DVS2

BUCK2 DVS output voltage when MODE[2:0] = 010 && PMIC_STBY_REQ = L

Table 63. BUCK2OUT_DVS2 register (address 17h) bit allocation

Bit	7	6	5	4	3	2	1	0
Symbol	RSVD	B2_DVS2						
Reset	0	0	0	1	1	0	0	0
Access	R/W	R/W	R/W	R/W	R/W	R/W	R/W	R/W

Table 64. BUCK2OUT_DVS2 register (address 17h) bit descriptions

Bit	Symbol	Description
7	RSVD	Reserved
6 to 0	B2_DVS2	BUCK1 DVS2 Output voltage Programmable from 0.60 V to 2.1875 V in 12.5 mV steps **001 1000 —** 0.9 V (default) See Table 109

8.2.23 BUCK2OUT_DVS3

BUCK2 DVS output voltage when MODE[2:0] = 011 && PMIC_STBY_REQ = L

Table 65. BUCK2OUT_DVS3 register (address 18h) bit allocation

Bit	7	6	5	4	3	2	1	0
Symbol	RSVD	B2_DVS3						
Reset	0	0	0	1	1	0	0	0
Access	R/W	R/W	R/W	R/W	R/W	R/W	R/W	R/W

Table 66. BUCK2OUT_DVS3 register (address 18h) bit descriptions

Bit	Symbol	Description
7	RSVD	Reserved
6 to 0	B2_DVS3	BUCK2 DVS3 Output voltage Programmable from 0.60 V to 2.1875 V in 12.5 mV steps **001 1000 —** 0.9 V (default) See Table 109

8.2.24 BUCK2OUT_DVS4

BUCK2 DVS output voltage when MODE[2:0] = 100 && PMIC_STBY_REQ = L

Table 67. BUCK2OUT_DVS4 register (address 19h) bit allocation

Bit	7	6	5	4	3	2	1	0
Symbol	RSVD	B2_DVS4						
Reset	0	0	0	1	1	0	0	0
Access	R/W	R/W	R/W	R/W	R/W	R/W	R/W	R/W

All information provided in this document is subject to legal disclaimers.

© 2025 NXP B.V. All rights reserved.

Table 68. BUCK2OUT_DVS4 register (address 19h) bit descriptions

Bit	Symbol	Description
7	RSVD	Reserved
6 to 0	B2_DVS4	BUCK2 DVS4 Output voltage Programmable from 0.60 V to 2.1875 V in 12.5 mV steps **001 1000 —** 0.9 V (default) See Table 109

8.2.25 BUCK2OUT_DVS5

BUCK2 DVS output voltage when MODE[2:0] = 101 && PMIC_STBY_REQ = L

Table 69. BUCK2OUT_DVS5 register (address 1Ah) bit allocation

Bit	7	6	5	4	3	2	1	0
Symbol	RSVD	B2_DVS5						
Reset	0	0	0	1	1	0	0	0
Access	R/W	R/W	R/W	R/W	R/W	R/W	R/W	R/W

Table 70. BUCK2OUT_DVS5 register (address 1Ah) bit descriptions

Bit	Symbol	Description
7	RSVD	Reserved
6 to 0	B2_DVS5	BUCK2 DVS5 Output voltage Programmable from 0.60 V to 2.1875 V in 12.5 mV steps **001 1000 —** 0.9 V (default) See Table 109

8.2.26 BUCK2OUT_DVS6

BUCK2 DVS output voltage when MODE[2:0] = 110 && PMIC_STBY_REQ = L

Table 71. BUCK2OUT_DVS6 register (address 1Bh) bit allocation

Bit	7	6	5	4	3	2	1	0
Symbol	RSVD	B2_DVS6						
Reset	0	0	0	1	1	0	0	0
Access	R/W	R/W	R/W	R/W	R/W	R/W	R/W	R/W

Table 72. BUCK2OUT_DVS6 register (address 1Bh) bit descriptions

Bit	Symbol	Description
7	RSVD	Reserved
6 to 0	B2_DVS6	BUCK2 DVS6 Output voltage Programmable from 0.60 V to 2.1875 V in 12.5 mV steps **001 1000 —** 0.9 V (default) See Table 109

8.2.27 BUCK2OUT_DVS7

BUCK2 DVS output voltage when MODE[2:0] = 111 && PMIC_STBY_REQ = L

All information provided in this document is subject to legal disclaimers.

© 2025 NXP B.V. All rights reserved.

Table 73. BUCK2OUT_DVS7 register (address 1Ch) bit allocation

Bit	7	6	5	4	3	2	1	0
Symbol	RSVD	B2_DVS7						
Reset	0	0	0	1	1	0	0	0
Access	R/W	R/W	R/W	R/W	R/W	R/W	R/W	R/W

Table 74. BUCK2OUT_DVS7 register (address 1Ch) bit descriptions

Bit	Symbol	Description
7	RSVD	Reserved
6 to 0	B2_DVS7	BUCK2 DVS7 Output voltage Programmable from 0.60 V to 2.1875 V in 12.5 mV steps **001 1000 —** 0.9 V (default) See Table 109

8.2.28 BUCK2OUT_STDBY

BUCK2 DVS output voltage PMIC_STBY_REQ = H

Table 75. BUCK2OUT_STDBY register (address 1Dh) bit allocation

Bit	7	6	5	4	3	2	1	0
Symbol	RSVD	B2_DVS_STBY						
Reset	0	0	0	1	1	0	0	0
Access	R/W	R/W	R/W	R/W	R/W	R/W	R/W	R/W

Table 76. BUCK2OUT_STDBY register (address 1Dh) bit descriptions

Bit	Symbol	Description
7	RSVD	Reserved
6 to 0	B2_DVS_STBY	BUCK2 Output voltage at Standby mode Programmable from 0.60 V to 2.1875 V in 12.5 mV steps **001 1000 —** 0.9 V (default) See Table 109

8.2.29 BUCK2OUT_MAX_LIMIT

BUCK2 output voltage max limit register. This register is protected by Lock key, 0x4E register should be written with unlock key before updating this register.

Table 77. BUCK2OUT_MAX_LIMIT register (address 1Fh) bit allocation

Bit	7	6	5	4	3	2	1	0
Symbol	RSVD	B2_MAX_LIMIT						
Reset	0	0	1	1	1	0	0	0
Access	R/W	R/W	R/W	R/W	R/W	R/W	R/W	R/W

All information provided in this document is subject to legal disclaimers.

© 2025 NXP B.V. All rights reserved.

Table 78. BUCK2OUT_MAX_LIMIT register (address 1Fh) bit descriptions

Bit	Symbol	Description
7	RSVD	Reserved
6 to 0	B2_MAX_LIMIT	BUCK2 output voltage maximum limit Programmable from 0.60 V to 2.1875 V in 12.5 mV steps **011 1000 —** 1.3 V (default) See Table 109

8.2.30 BUCK2OUT_MIN_LIMIT

BUCK2 output voltage Lower limit register. This register is protected by Lock key, 0x4E register should be written with unlock key before updating this register.

Table 79. BUCK2OUT_MIN_LIMIT register (address 20h) bit allocation

Bit	7	6	5	4	3	2	1	0
Symbol	RSVD	B2_MIN_LIMIT						
Reset	0	0	0	0	1	0	0	0
Access	R/W	R/W	R/W	R/W	R/W	R/W	R/W	R/W

Table 80. BUCK2OUT_MIN_LIMIT register (address 20h) bit descriptions

Bit	Symbol	Description
7	RSVD	Reserved
6 to 0	B2_MIN_LIMIT	BUCK2 output voltage minimum limit Programmable from 0.60 V to 2.1875 V in 12.5 mV steps **000 1000 —** 0.7 V (default) See Table 109

8.2.31 BUCK3CTRL

BUCK3 control register for Ramp, DVS control, Active discharge, FPWM and Enable.

Table 81. BUCK3CTRL register (address 21h) bit allocation

Bit	7	6	5	4	3	2	1	0
Symbol	B3_RAMP		B3_LPMODE		B3_AD	B3_FPWM	B3_ENMODE	
Reset	0	1	1	1	1	0	0	1
Access	R/W	R/W	R/W	R/W	R/W	R/W	R/W	R/W

Table 82. BUCK3CTRL register (address 21h) bit descriptions

Bit	Symbol	Description
7 to 6	B3_RAMP	BUCK3 DVS speed **00 —** 25 mV / 1 µs **01 —** 25 mV / 2 µs (default) **10 —** 25 mV / 4 µs **11 —** 25 mV / 8 µs
5 to 4	B3_LPMODE	BUCK3 power mode **00 —** Automatic transition mode **01 —** Low power mode at STANDBY mode and DPSTANDBY mode

All information provided in this document is subject to legal disclaimers.

© 2025 NXP B.V. All rights reserved.

Table 82. BUCK3CTRL register (address 21h) bit descriptions*...continued*

Bit	Symbol	Description
		10 — Low power mode at DPSTANDBY mode **11 —** Normal mode (default)
3	B3_AD	BUCK3 Active discharge **0 —** Always disable Active discharge resistor **1 —** Enable Active discharge resistor when regulator is OFF (default)
2	B3_FPWM	Forced PWM mode **0 —** Automatic PFM and PWM mode transition (default) **1 —** Forced PWM mode
1 to 0	B3_ENMODE	BUCK3 enable mode **00 —** OFF **01 —** ON at RUN State (default) **10 —** ON at ACTIVE mode or STANDBY mode, OFF at DPSTANDBY **11 —** ON at ACTIVE mode, OFF at STANDBY or DPSTANDBY

8.2.32 BUCK3OUT_DVS0

BUCK3 DVS output voltage when MODE[2:0] = 000 && PMIC_STBY_REQ = L

Table 83. BUCK3OUT_DVS0 register (address 22h) bit allocation

Bit	7	6	5	4	3	2	1	0
Symbol	RSVD	B3_DVS0						
Reset	0	0	1	0	0	0	0	0
Access	R/W	R/W	R/W	R/W	R/W	R/W	R/W	R/W

Table 84. BUCK3OUT_DVS0 register (address 22h) bit descriptions

Bit	Symbol	Description
7	RSVD	Reserved
6 to 0	B3_DVS0	BUCK3 DVS0 Output voltage Programmable from 0.60 V to 2.1875 V in 12.5 mV steps **010 0000 —** 1.0 V (default) See Table 109

8.2.33 BUCK3OUT_DVS1

BUCK3 DVS output voltage when MODE[2:0] = 001 && PMIC_STBY_REQ = L

Table 85. BUCK3OUT_DVS1 register (address 23h) bit allocation

Bit	7	6	5	4	3	2	1	0
Symbol	RSVD	B3_DVS1						
Reset	0	0	1	0	0	0	0	0
Access	R/W	R/W	R/W	R/W	R/W	R/W	R/W	R/W

Table 86. BUCK3OUT_DVS1 register (address 23h) bit descriptions

Bit	Symbol	Description
7	RSVD	Reserved

All information provided in this document is subject to legal disclaimers.

© 2025 NXP B.V. All rights reserved.

Table 86. BUCK3OUT_DVS1 register (address 23h) bit descriptions*...continued*

Bit	Symbol	Description
6 to 0	B3_DVS1	BUCK3 DVS1 Output voltage Programmable from 0.60 V to 2.1875 V in 12.5 mV steps **010 0000 —** 1.0 V (default) See Table 109

8.2.34 BUCK3OUT_DVS2

BUCK3 DVS output voltage when MODE[2:0] = 010 && PMIC_STBY_REQ = L

Table 87. BUCK3OUT_DVS2 register (address 24h) bit allocation

Bit	7	6	5	4	3	2	1	0
Symbol	RSVD	B3_DVS2						
Reset	0	0	1	0	0	0	0	0
Access	R/W	R/W	R/W	R/W	R/W	R/W	R/W	R/W

Table 88. BUCK3OUT_DVS2 register (address 24h) bit descriptions

Bit	Symbol	Description
7	RSVD	Reserved
6 to 0	B3_DVS2	BUCK1 DVS2 Output voltage Programmable from 0.60 V to 2.1875 V in 12.5 mV steps **010 0000 —** 1.0 V (default) See Table 109

8.2.35 BUCK3OUT_DVS3

BUCK3 DVS output voltage when MODE[2:0] = 011 && PMIC_STBY_REQ = L

Table 89. BUCK3OUT_DVS3 register (address 25h) bit allocation

Bit	7	6	5	4	3	2	1	0
Symbol	RSVD	B3_DVS3						
Reset	0	0	1	0	0	0	0	0
Access	R/W	R/W	R/W	R/W	R/W	R/W	R/W	R/W

Table 90. BUCK3OUT_DVS3 register (address 25h) bit descriptions

Bit	Symbol	Description
7	RSVD	Reserved
6 to 0	B3_DVS3	BUCK3 DVS3 Output voltage Programmable from 0.60 V to 2.1875 V in 12.5 mV steps **010 0000 —** 1.0 V (default) See Table 109

8.2.36 BUCK3OUT_DVS4

BUCK3 DVS output voltage when MODE[2:0] = 100 && PMIC_STBY_REQ = L

All information provided in this document is subject to legal disclaimers.

© 2025 NXP B.V. All rights reserved.

Table 91. BUCK3OUT_DVS4 register (address 26h) bit allocation

Bit	7	6	5	4	3	2	1	0
Symbol	RSVD	B3_DVS4						
Reset	0	0	1	0	0	0	0	0
Access	R/W	R/W	R/W	R/W	R/W	R/W	R/W	R/W

Table 92. BUCK3OUT_DVS4 register (address 26h) bit descriptions

Bit	Symbol	Description
7	RSVD	Reserved
6 to 0	B3_DVS4	BUCK3 DVS4 Output voltage Programmable from 0.60 V to 2.1875 V in 12.5 mV steps **010 0000 —** 1.0 V (default) See Table 109

8.2.37 BUCK3OUT_DVS5

BUCK3 DVS output voltage when MODE[2:0] = 101 && PMIC_STBY_REQ = L

Table 93. BUCK3OUT_DVS5 register (address 27h) bit allocation

Bit	7	6	5	4	3	2	1	0
Symbol	RSVD	B3_DVS5						
Reset	0	0	1	0	0	0	0	0
Access	R/W	R/W	R/W	R/W	R/W	R/W	R/W	R/W

Table 94. BUCK3OUT_DVS5 register (address 27h) bit descriptions

Bit	Symbol	Description
7	RSVD	Reserved
6 to 0	B3_DVS5	BUCK3 DVS5 Output voltage Programmable from 0.60 V to 2.1875 V in 12.5 mV steps **010 0000 —** 1.0 V (default) See Table 109

8.2.38 BUCK3OUT_DVS6

BUCK3 DVS output voltage when MODE[2:0] = 110 && PMIC_STBY_REQ = L

Table 95. BUCK3OUT_DVS6 register (address 28h) bit allocation

Bit	7	6	5	4	3	2	1	0
Symbol	RSVD	B3_DVS6						
Reset	0	0	1	0	0	0	0	0
Access	R/W	R/W	R/W	R/W	R/W	R/W	R/W	R/W

Table 96. BUCK3OUT_DVS6 register (address 28h) bit descriptions

Bit	Symbol	Description
7	RSVD	Reserved

All information provided in this document is subject to legal disclaimers.

© 2025 NXP B.V. All rights reserved.

Table 96. BUCK3OUT_DVS6 register (address 28h) bit descriptions*...continued*

Bit	Symbol	Description
6 to 0	B3_DVS6	BUCK3 DVS6 Output voltage Programmable from 0.60 V to 2.1875 V in 12.5 mV steps **010 0000 —** 1.0 V (default) See Table 109

8.2.39 BUCK3OUT_DVS7

BUCK3 DVS output voltage when MODE[2:0] = 111 && PMIC_STBY_REQ = L

Table 97. BUCK3OUT_DVS7 register (address 29h) bit allocation

Bit	7	6	5	4	3	2	1	0
Symbol	RSVD	B3_DVS7						
Reset	0	0	1	0	0	0	0	0
Access	R/W	R/W	R/W	R/W	R/W	R/W	R/W	R/W

Table 98. BUCK3OUT_DVS7 register (address 29h) bit descriptions

Bit	Symbol	Description
7	RSVD	Reserved
6 to 0	B3_DVS7	BUCK3 DVS7 Output voltage Programmable from 0.60 V to 2.1875 V in 12.5 mV steps **010 0000 —** 1.0 V (default) See Table 109

8.2.40 BUCK3OUT_STDBY

BUCK3 DVS output voltage PMIC_STBY_REQ = H

Table 99. BUCK3OUT_STDBY register (address 2Ah) bit allocation

Bit	7	6	5	4	3	2	1	0
Symbol	RSVD	B3_DVS_STBY						
Reset	0	0	1	0	0	0	0	0
Access	R/W	R/W	R/W	R/W	R/W	R/W	R/W	R/W

Table 100. BUCK3OUT_STDBY register (address 2Ah) bit descriptions

Bit	Symbol	Description
7	RSVD	Reserved
6 to 0	B3_DVS_STBY	BUCK3 Output voltage at Standby mode Programmable from 0.60 V to 2.1875 V in 12.5 mV steps **010 0000 —** 1.0 V (default) See Table 109

8.2.41 BUCK3OUT_MAX_LIMIT

BUCK3 output voltage max limit register. This register is protected by Lock key, 0x4E register should be written with unlock key before updating this register.

All information provided in this document is subject to legal disclaimers.

© 2025 NXP B.V. All rights reserved.

Table 101. BUCK3OUT_MAX_LIMIT register (address 2Ch) bit allocation

Bit	7	6	5	4	3	2	1	0
Symbol	RSVD	B3_MAX_LIMIT						
Reset	0	0	1	1	1	0	0	0
Access	R/W	R/W	R/W	R/W	R/W	R/W	R/W	R/W

Table 102. BUCK3OUT_MAX_LIMIT register (address 2Ch) bit descriptions

Bit	Symbol	Description
7	RSVD	Reserved
6 to 0	B3_MAX_LIMIT	BUCK3 output voltage max limit Programmable from 0.60 V to 2.1875 V in 12.5 mV steps **011 1000 —** 1.3 V (default) See Table 109

8.2.42 BUCK3OUT_MIN_LIMIT

BUCK3 output voltage lower limit register. This register is protected by Lock key, 0x4E register should be written with unlock key before updating this register.

Table 103. BUCK3OUT_MIN_LIMIT register (address 2Dh) bit allocation

Bit	7	6	5	4	3	2	1	0
Symbol	RSVD	B3_MIN_LIMIT						
Reset	0	0	0	0	1	0	0	0
Access	R/W	R/W	R/W	R/W	R/W	R/W	R/W	R/W

Table 104. BUCK3OUT_MIN_LIMIT register (address 2Dh) bit descriptions

Bit	Symbol	Description
7	RSVD	Reserved
6 to 0	B3_MIN_LIMIT	BUCK3 output voltage minimum limit Programmable from 0.60 V to 2.1875 V in 12.5 mV steps **000 1000 —** 0.7 V (default) See Table 109

8.2.43 BUCK4CTRL

BUCK4 control register for Active discharge, FPWM and Enable.

Table 105. BUCK4CTRL register (address 2Eh) bit allocation

Bit	7	6	5	4	3	2	1	0
Symbol	RSVD		B4_LPMODE		B4_AD	B4_FPWM	B4_ENMODE	
Reset	0	0	1	1	1	0	0	1
Access	R/W	R/W	R/W	R/W	R/W	R/W	R/W	R/W

All information provided in this document is subject to legal disclaimers.

© 2025 NXP B.V. All rights reserved.

Table 106. BUCK4CTRL register (address 2Eh) bit descriptions

Bit	Symbol	Description
7 to 6	RSVD	Reserved
5 to 4	B4_LPMODE	BUCK4 power mode **00 —** Automatic transition mode **01 —** Low power mode at STANDBY mode and DPSTANDBY mode **10 —** Low power mode at DPSTANDBY mode **11 —** Normal mode (default)
3	B4_AD	Buck4 Active discharge **0 —** Always disable Active discharge resistor **1 —** Enable Active discharge resistor when regulator is OFF (default)
2	B4_FPWM	Forced PWM mode **0 —** Automatic PFM and PWM mode transition (default) **1 —** Forced PWM mode
1 to 0	B4_ENMODE	Buck4 enable mode **00 —** OFF **01 —** ON at RUN State (default) **10 —** ON at ACTIVE mode or STANDBY mode, OFF at DPSTANDBY **11 —** ON at ACTIVE mode, OFF at STANDBY or DPSTANDBY

8.2.44 BUCK4OUT

BUCK4 output voltage configuration register. This register is protected by Lock key, 0x4E register should be written with unlock key before updating this register.

Table 107. BUCK4OUT register (address 2Fh) bit allocation

Bit	7	6	5	4	3	2	1	0
Symbol	RSVD	B4_OUT						
Reset[1]	0	0	0	0	0	0	0	0
Access	R/W	R/W	R/W	R/W	R/W	R/W	R/W	R/W

[1] The reset value depends on the specific otp version as shown in Table 108.

Table 108. BUCK4OUT register (address 2Fh) bit descriptions

Bit	Symbol	Description
7	RSVD	Reserved
6 to 0	B4_OUT	BUCK4 Output voltage Programmable from 0.60 V to 3.4 V in 25 mV steps ***Note:*** *PCA9460A and PCA9450B: 001 0100b (1.1 V), PCA9460C: 001 1000b (1.2 V)* See Table 110

Table 109. BUCK2, BUCK3 Output voltage table

Code	Voltage	Code	Voltage	Code	Voltage	Code	Voltage
0x00	0.6000 V	0x20	1.0000 V	0x40	1.4000 V	0x60	1.8000 V
0x01	0.6125 V	0x21	1.0125 V	0x41	1.4125 V	0x61	1.8125 V
0x02	0.6250 V	0x22	1.0250 V	0x42	1.4250 V	0x62	1.8250 V
0x03	0.6375 V	0x23	1.0375 V	0x43	1.4375 V	0x63	1.8375 V

All information provided in this document is subject to legal disclaimers.

© 2025 NXP B.V. All rights reserved.

Table 109. BUCK2, BUCK3 Output voltage table*...continued*

Code	Voltage	Code	Voltage	Code	Voltage	Code	Voltage
0x04	0.6500 V	0x24	1.0500 V	0x44	1.4500 V	0x64	1.8500 V
0x05	0.6625 V	0x25	1.0625 V	0x45	1.4625 V	0x65	1.8625 V
0x06	0.6750 V	0x26	1.0750 V	0x46	1.4750 V	0x66	1.8750 V
0x07	0.6875 V	0x27	1.0875 V	0x47	1.4875 V	0x67	1.8875 V
0x08	0.7000 V	0x28	1.1000 V	0x48	1.5000 V	0x68	1.9000 V
0x09	0.7125 V	0x29	1.1125 V	0x49	1.5125 V	0x69	1.9125 V
0x0A	0.7250 V	0x2A	1.1250 V	0x4A	1.5250 V	0x6A	1.9250 V
0x0B	0.7375 V	0x2B	1.1375 V	0x4B	1.5375 V	0x6B	1.9375 V
0x0C	0.7500 V	0x2C	1.1500 V	0x4C	1.5500 V	0x6C	1.9500 V
0x0D	0.7625 V	0x2D	1.1625 V	0x4D	1.5625 V	0x6D	1.9625 V
0x0E	0.7750 V	0x2E	1.1750 V	0x4E	1.5750 V	0x6E	1.9750 V
0x0F	0.7875 V	0x2F	1.1875 V	0x4F	1.5875 V	0x6F	1.9875 V
0x10	0.8000 V	0x30	1.2000 V	0x50	1.6000 V	0x70	2.0000 V
0x11	0.8125 V	0x31	1.2125 V	0x51	1.6125 V	0x71	2.0125 V
0x12	0.8250 V	0x32	1.2250 V	0x52	1.6250 V	0x72	2.0250 V
0x13	0.8375 V	0x33	1.2375 V	0x53	1.6375 V	0x73	2.0375 V
0x14	0.8500 V	0x34	1.2500 V	0x54	1.6500 V	0x74	2.0500 V
0x15	0.8625 V	0x35	1.2625 V	0x55	1.6625 V	0x75	2.0625 V
0x16	0.8750 V	0x36	1.2750 V	0x56	1.6750 V	0x76	2.0750 V
0x17	0.8875 V	0x37	1.2875 V	0x57	1.6875 V	0x77	2.0875 V
0x18	0.9000 V	0x38	1.3000 V	0x58	1.7000 V	0x78	2.1000 V
0x19	0.9125 V	0x39	1.3125 V	0x59	1.7125 V	0x79	2.1125 V
0x1A	0.9250 V	0x3A	1.3250 V	0x5A	1.7250 V	0x7A	2.1250 V
0x1B	0.9375 V	0x3B	1.3375 V	0x5B	1.7375 V	0x7B	2.1375 V
0x1C	0.9500 V	0x3C	1.3500 V	0x5C	1.7500 V	0x7C	2.1500 V
0x1D	0.9625 V	0x3D	1.3625 V	0x5D	1.7625 V	0x7D	2.1625 V
0x1E	0.9750 V	0x3E	1.3750 V	0x5E	1.7750 V	0x7E	2.1750 V
0x1F	0.9875 V	0x3F	1.3875 V	0x5F	1.7875 V	0x7F	2.1875 V

Table 110. BUCK1, BUCK4 Output voltage table

Code	Voltage	Code	Voltage	Code	Voltage	Code	Voltage
0x00	0.600 V	0x20	1.400 V	0x40	2.200 V	0x60	3.000 V
0x01	0.625 V	0x21	1.425 V	0x41	2.225 V	0x61	3.025 V
0x02	0.650 V	0x22	1.450 V	0x42	2.250 V	0x62	3.050 V
0x03	0.675 V	0x23	1.475 V	0x43	2.275 V	0x63	3.075 V
0x04	0.700 V	0x24	1.500 V	0x44	2.300 V	0x64	3.100 V

All information provided in this document is subject to legal disclaimers.

© 2025 NXP B.V. All rights reserved.

Table 110. BUCK1, BUCK4 Output voltage table*...continued*

Code	Voltage	Code	Voltage	Code	Voltage	Code	Voltage
0x05	0.725 V	0x25	1.525 V	0x45	2.325 V	0x65	3.125 V
0x06	0.750 V	0x26	1.550 V	0x46	2.350 V	0x66	3.150 V
0x07	0.775 V	0x27	1.575 V	0x47	2.375 V	0x67	3.175 V
0x08	0.800 V	0x28	1.600 V	0x48	2.400 V	0x68	3.200 V
0x09	0.825 V	0x29	1.625 V	0x49	2.425 V	0x69	3.225 V
0x0A	0.850 V	0x2A	1.650 V	0x4A	2.450 V	0x6A	3.250 V
0x0B	0.875 V	0x2B	1.675 V	0x4B	2.475 V	0x6B	3.275 V
0x0C	0.900 V	0x2C	1.700 V	0x4C	2.500 V	0x6C	3.300 V
0x0D	0.925 V	0x2D	1.725 V	0x4D	2.525 V	0x6D	3.325 V
0x0E	0.950 V	0x2E	1.750 V	0x4E	2.550 V	0x6E	3.350 V
0x0F	0.975 V	0x2F	1.775 V	0x4F	2.575 V	0x6F	3.375 V
0x10	1.000 V	0x30	1.800 V	0x50	2.600 V	0x70	3.400 V
0x11	1.025 V	0x31	1.825 V	0x51	2.625 V	0x71	3.400 V
0x12	1.050 V	0x32	1.850 V	0x52	2.650 V	0x72	3.400 V
0x13	1.075 V	0x33	1.875 V	0x53	2.675 V	0x73	3.400 V
0x14	1.100 V	0x34	1.900 V	0x54	2.700 V	0x74	3.400 V
0x15	1.125 V	0x35	1.925 V	0x55	2.725 V	0x75	3.400 V
0x16	1.150 V	0x36	1.950 V	0x56	2.750 V	0x76	3.400 V
0x17	1.175 V	0x37	1.975 V	0x57	2.775 V	0x77	3.400 V
0x18	1.200 V	0x38	2.000 V	0x58	2.800 V	0x78	3.400 V
0x19	1.225 V	0x39	2.025 V	0x59	2.825 V	0x79	3.400 V
0x1A	1.250 V	0x3A	2.050 V	0x5A	2.850 V	0x7A	3.400 V
0x1B	1.275 V	0x3B	2.075 V	0x5B	2.875 V	0x7B	3.400 V
0x1C	1.300 V	0x3C	2.100 V	0x5C	2.900 V	0x7C	3.400 V
0x1D	1.325 V	0x3D	2.125 V	0x5D	2.925 V	0x7D	3.400 V
0x1E	1.350 V	0x3E	2.150 V	0x5E	2.950 V	0x7E	3.400 V
0x1F	1.375 V	0x3F	2.175 V	0x5F	2.975 V	0x7F	3.400 V

8.2.45 LDO1_CFG

LDO1 enable control and active discharge resistor configuration register

Table 111. LDO1_CFG register (address 30h) bit allocation

Bit	7	6	5	4	3	2	1	0
Symbol	L1_CSEL		L1_LLSEL		L1_LPMODE		L1_ENMODE	
Reset	1	0	0	1	1	1	0	1
Access	R/W	R/W	R/W	R/W	R/W	R/W	R/W	R/W

All information provided in this document is subject to legal disclaimers.

© 2025 NXP B.V. All rights reserved.

Table 112. LDO1_CFG register (address 30h) bit descriptions

Bit	Symbol	Description
7 to 6	L1_CSEL	Total Output capacitor selection **00 —** Setting for Cout < 5 µF **01 —** Setting for Cout < 5 µF **10 and 11 —** Auto Cout detection (default)
5 to 4	L1_LLSEL	Output trace resistance compensation **00 —** No Compensation **01 —** 15 mΩ (default) **10 —** 30 mΩ **11 —** 45 mΩ
3 to 2	L1_LPMODE	LDO1 power mode **00 —** Low power mode at RUN state **01 —** Low power mode at STANDBY mode and DPSTANDBY mode **10 —** Low power mode at DPSTANDBY mode **11 —** Normal mode (default)
1 to 0	L1_ENMODE	LDO1 Enable mode **00 —**OFF **01 —** ON at RUN State (default) **10 —** ON at ACTIVE mode or STANDBY mode, OFF at DPSTANDBY **11 —** ON at ACTIVE mode, OFF at STANDBY or DPSTANDBY

8.2.46 LDO1_OUT

LDO1 output voltage register. This register is protected by Lock key, 0x4E register should be written with unlock key before updating this register.

Table 113. LDO1_OUT register (address 31h) bit allocation

Bit	7	6	5	4	3	2	1	0
Symbol	L1_AD	L1_INL1_MDET	L1_INL1_VSEL	L1_OUT				
Reset	1	0	0					
Access	R/W	R/W	R/W	R/W	R/W	R/W	R/W	R/W

Table 114. LDO1_OUT register (address 31h) bit descriptions

Bit	Symbol	Description
7	L1_AD	LDO1 Active discharge enable **0 —** Always disable Active discharge resistor **1 —** Enable Active discharge resistor when regulator is OFF (default)
6	L1_INL1_MDET	Manual detection for INL1 supply **0 —** Auto detection (default) **1 —** Manual configuration
5	L1_INL1_VSEL	INL1 voltage selection, effective only when L1_INL1_MDET = 1b **0 —** (VSYS – VINL1) ≤ 0.7 (default) **1 —** (VSYS – VINL1) > 0.7
4 to 0	L1_OUT	LDO1 output voltage Programmable from 0.6 V to 1.95 V in 50 mV steps See Table 115[1]

[1]
- PCA9460A: 0 1010 (1.1 V)
- PCA9460B: 0 0000 (0.6 V)
- PCA9460C: 0 1100 (1.2 V)

All information provided in this document is subject to legal disclaimers.

© 2025 NXP B.V. All rights reserved.

Table 115. L1_OUT values

0x00 : 0.60 V	0x8 : 1.00 V	0x10 : 1.40 V	0x18 : 1.80 V
0x01 : 0.65 V	0x9 : 1.05 V	0x11 : 1.45 V	0x19 : 1.85 V
0x02 : 0.70 V	**0xA : 1.10 V**	0x12 : 1.50 V	0x1A : 1.90 V
0x03 : 0.75 V	0xB : 1.15 V	0x13 : 1.55 V	0x1B : 1.95 V
0x04 : 0.80 V	**0xC : 1.20 V**	0x14 : 1.60 V	0x1C : 1.95 V
0x05 : 0.85 V	0xD : 1.25 V	0x15 : 1.65 V	0x1D : 1.95 V
0x06 : 0.90 V	0xE : 1.30 V	0x16 : 1.70 V	0x1E : 1.95 V
0x07 : 0.95 V	0xF : 1.35 V	0x17 : 1.75 V	0x1F : 1.95 V

8.2.47 LDO2_CFG

LDO2 enable control and active discharge resistor configuration register

Table 116. LDO2_CFG register (address 32h) bit allocation

Bit	7	6	5	4	3	2	1	0
Symbol	RSVD			L2_AD	RSVD		L2_ENMODE	
Reset	0	0	0	1	0	0	0	1
Access	R/W	R/W	R/W	R/W	R/W	R/W	R/W	R/W

Table 117. LDO2_CFG register (address 32h) bit descriptions

Bit	Symbol	Description
7 to 5	RSVD	Reserved
4	L2_AD	LDO2 Active discharge enable **0 —** Always disable Active discharge resistor **1 —** Enable Active discharge resistor when regulator is OFF (default)
3 to 2	RSVD	Reserved
1 to 0	L2_ENMODE	LDO2 Enable mode **00 —** OFF **01 —** ON at RUN State (default) **10 —** ON at ACTIVE mode or STANDBY mode, OFF at DPSTANDBY **11 —** ON at ACTIVE mode, OFF at STANDBY or DPSTANDBY

8.2.48 LDO2_OUT_L

LDO2 output voltage register when LDO2_VSEL is low. This register is protected by Lock key, 0x4E register should be written with unlock key before updating this register.

Table 118. LDO2_OUT_L register (address 33h) bit allocation

Bit	7	6	5	4	3	2	1	0
Symbol	RSVD		L2_OUT_L					
Reset	0	0	Reset value is 11 0010 (3.3 V) Table 120					
Access	R/W	R/W	R/W	R/W	R/W	R/W	R/W	R/W

All information provided in this document is subject to legal disclaimers.

© 2025 NXP B.V. All rights reserved.

Table 119. LDO2_OUT_L register (address 33h) bit descriptions

Bit	Symbol	Description
7 to 6	RSVD	Reserved
5 to 0	L2_OUT_L	LDO2 output voltage when LDO2_VSEL = Low Programmable from 0.8 V to 3.3 V in 50 mV steps **11 0010 —** 3.3 V (default) See Table 120

Table 120. L2_OUT_L values

0x00 : 0.80 V	0x10 : 1.60 V	0x20 : 2.40 V	0x30 : 3.20 V
0x01 : 0.85 V	0x11 : 1.65 V	0x21 : 2.45 V	0x31 : 3.25 V
0x02 : 0.90 V	0x12 : 1.70 V	0x22 : 2.50 V	**0x32 : 3.30 V**
0x03 : 0.95 V	0x13 : 1.75 V	0x23 : 2.55 V	0x33 : 3.30 V
0x04 : 1.00 V	0x14 : 1.80 V	0x24 : 2.60 V	0x34 : 3.30 V
0x05 : 1.05 V	0x15 : 1.85 V	0x25 : 2.65 V	0x35 : 3.30 V
0x06 : 1.10 V	0x16 : 1.90 V	0x26 : 2.70 V	0x36 : 3.30 V
0x07 : 1.15 V	0x17 : 1.95 V	0x27 : 2.75 V	0x37 : 3.30 V
0x08 : 1.20 V	0x18 : 2.00 V	0x28 : 2.80 V	0x38 : 3.30 V
0x09 : 1.25 V	0x19 : 2.05 V	0x29 : 2.85 V	0x39 : 3.30 V
0x0A : 1.30 V	0x1A : 2.10 V	0x2A : 2.90 V	0x3A : 3.30 V
0x0B : 1.35 V	0x1B : 2.15 V	0x2B : 2.95 V	0x3B : 3.30 V
0x0C : 1.40 V	0x1C : 2.20 V	0x2C : 3.00 V	0x3C : 3.30 V
0x0D : 1.45 V	0x1D : 2.25 V	0x2D : 3.05 V	0x3D : 3.30 V
0x0E : 1.50 V	0x1E : 2.30 V	0x2E : 3.10 V	0x3E : 3.30 V
0x0F : 1.55 V	0x1F : 2.35 V	0x2F : 3.15 V	0x3F : 3.30 V

8.2.49 LDO2_OUT_H

LDO2 output voltage register when LDO2_VSEL is High. This register is protected by Lock key, 0x4E register should be written with unlock key before updating this register.

Table 121. LDO2_OUT_H register (address 34h) bit allocation

Bit	7	6	5	4	3	2	1	0
Symbol	RSVD		L2_OUT_H					
Reset	0	0	0	1	0	1	0	0
Access	R/W	R/W	R/W	R/W	R/W	R/W	R/W	R/W

Table 122. LDO2_OUT_H register (address 34h) bit descriptions

Bit	Symbol	Description
7 to 6	RSVD	Reserved
5 to 0	L2_OUT_H	LDO2 output voltage when LDO2_VSEL = High Programmable from 0.8 V to 3.3 V in 50 mV steps

All information provided in this document is subject to legal disclaimers.

© 2025 NXP B.V. All rights reserved.

Table 122. LDO2_OUT_H register (address 34h) bit descriptions*...continued*

Bit	Symbol	Description
		01 0100 — 1.8 V (default) See Table 120

8.2.50 LDO3_CFG

LDO3 enable control and active discharge resistor configuration register

Table 123. LDO3_CFG register (address 35h) bit allocation

Bit	7	6	5	4	3	2	1	0
Symbol	RSVD			L3_AD	RSVD		L3_ENMODE	
Reset	0	0	0	1	0	0	0	1
Access	R/W	R/W	R/W	R/W	R/W	R/W	R/W	R/W

Table 124. LDO3_CFG register (address 35h) bit descriptions

Bit	Symbol	Description
7 to 5	RSVD	Reserved
4	L3_AD	LDO3 Active discharge enable **0 —** Always disable Active discharge resistor **1 —** Enable Active discharge resistor when regulator is OFF (default)
3 to 2	RSVD	Reserved
1 to 0	L3_ENMODE	LDO3 Enable mode **00 —** OFF **01 —** ON at RUN State (default) **10 —** ON at ACTIVE mode or STANDBY mode, OFF at DPSTANDBY **11 —** ON at ACTIVE mode, OFF at STANDBY or DPSTANDBY

8.2.51 LDO3_OUT

LDO3 output voltage register. This register is protected by Lock key, 0x4E register should be written with unlock key before updating this register.

Table 125. LDO3_OUT register (address 36h) bit allocation

Bit	7	6	5	4	3	2	1	0
Symbol	RSVD		L3_OUT					
Reset	0	0	1	1	0	0	1	0
Access	R/W	R/W	R/W	R/W	R/W	R/W	R/W	R/W

Table 126. LDO3_OUT register (address 36h) bit descriptions

Bit	Symbol	Description
7 to 6	RSVD	Reserved
5 to 0	L3_AD	LDO3 output voltage Programmable from 0.8 V to 3.3 V in 50 mV steps **11 0010 —** 3.3 V (default) See Table 127

All information provided in this document is subject to legal disclaimers.

© 2025 NXP B.V. All rights reserved.

Table 127. L3_OUT values

0x00 : 0.80 V	0x10 : 1.60 V	0x20 : 2.40 V	0x30 : 3.20 V
0x01 : 0.85 V	0x11 : 1.65 V	0x21 : 2.45 V	0x31 : 3.25 V
0x02 : 0.90 V	0x12 : 1.70 V	0x22 : 2.50 V	**0x32 : 3.30 V**
0x03 : 0.95 V	0x13 : 1.75 V	0x23 : 2.55 V	0x33 : 3.30 V
0x04 : 1.00 V	0x14 : 1.80 V	0x24 : 2.60 V	0x34 : 3.30 V
0x05 : 1.05 V	0x15 : 1.85 V	0x25 : 2.65 V	0x35 : 3.30 V
0x06 : 1.10 V	0x16 : 1.90 V	0x26 : 2.70 V	0x36 : 3.30 V
0x07 : 1.15 V	0x17 : 1.95 V	0x27 : 2.75 V	0x37 : 3.30 V
0x08 : 1.20 V	0x18 : 2.00 V	0x28 : 2.80 V	0x38 : 3.30 V
0x09 : 1.25 V	0x19 : 2.05 V	0x29 : 2.85 V	0x39 : 3.30 V
0x0A : 1.30 V	0x1A : 2.10 V	0x2A : 2.90 V	0x3A : 3.30 V
0x0B : 1.35 V	0x1B : 2.15 V	0x2B : 2.95 V	0x3B : 3.30 V
0x0C : 1.40 V	0x1C : 2.20 V	0x2C : 3.00 V	0x3C : 3.30 V
0x0D : 1.45 V	0x1D : 2.25 V	0x2D : 3.05 V	0x3D : 3.30 V
0x0E : 1.50 V	0x1E : 2.30 V	0x2E : 3.10 V	0x3E : 3.30 V
0x0F : 1.55 V	0x1F : 2.35 V	0x2F : 3.15 V	0x3F : 3.30 V

8.2.52 LDO4_CFG

LDO4 enable control and active discharge resistor configuration register

Table 128. LDO4_CFG register (address 37h) bit allocation

Bit	7	6	5	4	3	2	1	0
Symbol	RSVD			L4_AD	RSVD		L4_ENMODE	
Reset	0	0	0	1	0	0	0	1
Access	R/W	R/W	R/W	R/W	R/W	R/W	R/W	R/W

Table 129. LDO4_CFG register (address 37h) bit descriptions

Bit	Symbol	Description
7 to 5	RSVD	Reserved
4	L4_AD	LDO4 Active discharge enable **0 —** Always disable Active discharge resistor **1 —** Enable Active discharge resistor when regulator is OFF (default)
3 to 2	RSVD	Reserved
1 to 0	L4_ENMODE	LDO4 Enable mode **00 —** OFF **01 —** ON at RUN State (default) **10 —** ON at ACTIVE mode or STANDBY mode, OFF at DPSTANDBY **11 —** ON at ACTIVE mode, OFF at STANDBY or DPSTANDBY

All information provided in this document is subject to legal disclaimers.

© 2025 NXP B.V. All rights reserved.

8.2.53 LDO4_OUT

LDO4 output voltage register. This register is protected by Lock key, 0x4E register should be written with unlock key before updating this register.

Table 130. LDO4_OUT register (address 38h) bit allocation

Bit	7	6	5	4	3	2	1	0
Symbol	RSVD		L4_OUT					
Reset	0	0	0	1	0	1	0	0
Access	R/W	R/W	R/W	R/W	R/W	R/W	R/W	R/W

Table 131. LDO4_OUT register (address 38h) bit descriptions

Bit	Symbol	Description
7 to 6	RSVD	Reserved
5 to 0	L4_OUT	LDO4 output voltage Programmable from 0.8 V to 3.3 V in 50 mV steps **01 0100 —** 1.8 V (default) See Table 132

Table 132. L4_OUT values

0x00 : 0.80 V	0x10 : 1.60 V	0x20 : 2.40 V	0x30 : 3.20 V
0x01 : 0.85 V	0x11 : 1.65 V	0x21 : 2.45 V	0x31 : 3.25 V
0x02 : 0.90 V	0x12 : 1.70 V	0x22 : 2.50 V	0x32 : 3.30 V
0x03 : 0.95 V	0x13 : 1.75 V	0x23 : 2.55 V	0x33 : 3.30 V
0x04 : 1.00 V	**0x14 : 1.80 V**	0x24 : 2.60 V	0x34 : 3.30 V
0x05 : 1.05 V	0x15 : 1.85 V	0x25 : 2.65 V	0x35 : 3.30 V
0x06 : 1.10 V	0x16 : 1.90 V	0x26 : 2.70 V	0x36 : 3.30 V
0x07 : 1.15 V	0x17 : 1.95 V	0x27 : 2.75 V	0x37 : 3.30 V
0x08 : 1.20 V	0x18 : 2.00 V	0x28 : 2.80 V	0x38 : 3.30 V
0x09 : 1.25 V	0x19 : 2.05 V	0x29 : 2.85 V	0x39 : 3.30 V
0x0A : 1.30 V	0x1A : 2.10 V	0x2A : 2.90 V	0x3A : 3.30 V
0x0B : 1.35 V	0x1B : 2.15 V	0x2B : 2.95 V	0x3B : 3.30 V
0x0C : 1.40 V	0x1C : 2.20 V	0x2C : 3.00 V	0x3C : 3.30 V
0x0D : 1.45 V	0x1D : 2.25 V	0x2D : 3.05 V	0x3D : 3.30 V
0x0E : 1.50 V	0x1E : 2.30 V	0x2E : 3.10 V	0x3E : 3.30 V
0x0F : 1.55 V	0x1F : 2.35 V	0x2F : 3.15 V	0x3F : 3.30 V

8.2.54 LDOSNVS_CFG

LDO_SNVS control register for enable and voltage. This register is protected by Lock key, 0x4E register should be written with unlock key before updating this register.

All information provided in this document is subject to legal disclaimers.

© 2025 NXP B.V. All rights reserved.

Table 133. LDOSNVS_CFG register (address 39h) bit allocation

Bit	7	6	5	4	3	2	1	0
Symbol	LSNVS_AD	LS_ENMODE	L_SNVS_OUT					
Reset	1	1	1	0	1	1	0	0
Access	R/W	R/W	R/W	R/W	R/W	R/W	R/W	R/W

Table 134. LDOSNVS_CFG register (address 39h) bit descriptions

Bit	Symbol	Description
7	LSNVS_AD	SNVS LDO Active discharge enable **0 —** Always disable Active discharge resistor **1 —** Enable Active discharge resistor when regulator is OFF (default)
6	LS_ENMODE	LDO_SNVS Enable mode **0 —** OFF **1 —** Always ON (default)
5 to 0	L_SNVS_OUT	LDO_SNVS output voltage Programmable from 0.8 V to 3.3 V in 50 mV steps **10 1100 —** 3.0 V (default) See Table 135

Table 135. L_SNVS_OUT values

0x00 : 0.80 V	0x10 : 1.60 V	0x20 : 2.40 V	0x30 : 3.20 V
0x01 : 0.85 V	0x11 : 1.65 V	0x21 : 2.45 V	0x31 : 3.25 V
0x02 : 0.90 V	0x12 : 1.70 V	0x22 : 2.50 V	0x32 : 3.30 V
0x03 : 0.95 V	0x13 : 1.75 V	0x23 : 2.55 V	0x33 : 3.30 V
0x04 : 1.00 V	0x14 : 1.80 V	0x24 : 2.60 V	0x34 : 3.30 V
0x05 : 1.05 V	0x15 : 1.85 V	0x25 : 2.65 V	0x35 : 3.30 V
0x06 : 1.10 V	0x16 : 1.90 V	0x26 : 2.70 V	0x36 : 3.30 V
0x07 : 1.15 V	0x17 : 1.95 V	0x27 : 2.75 V	0x37 : 3.30 V
0x08 : 1.20 V	0x18 : 2.00 V	0x28 : 2.80 V	0x38 : 3.30 V
0x09 : 1.25 V	0x19 : 2.05 V	0x29 : 2.85 V	0x39 : 3.30 V
0x0A : 1.30 V	0x1A : 2.10 V	0x2A : 2.90 V	0x3A : 3.30 V
0x0B : 1.35 V	0x1B : 2.15 V	0x2B : 2.95 V	0x3B : 3.30 V
0x0C : 1.40 V	0x1C : 2.20 V	**0x2C : 3.00 V**	0x3C : 3.30 V
0x0D : 1.45 V	0x1D : 2.25 V	0x2D : 3.05 V	0x3D : 3.30 V
0x0E : 1.50 V	0x1E : 2.30 V	0x2E : 3.10 V	0x3E : 3.30 V
0x0F : 1.55 V	0x1F : 2.35 V	0x2F : 3.15 V	0x3F : 3.30 V

8.2.55 LSW1_CTRL

Load switch 1 configuration register

All information provided in this document is subject to legal disclaimers.

© 2025 NXP B.V. All rights reserved.

Table 136. LSW1_CTRL register (address 40h) bit allocation

Bit	7	6	5	4	3	2	1	0
Symbol	LSW1_CFG	RSVD		LSW1_AD	RSVD		LSW1_EN	
Reset	0	0	0	1	0	0	0	1
Access	R/W	R/W	R/W	R/W	R/W	R/W	R/W	R/W

Table 137. LSW1_CTRL register (address 40h) bit descriptions

Bit	Symbol	Description
7	LSW1_CFG	Load SW 1 Configuration **0 —** Load switch (default) **1 —** LED driver
6 to 5	RSVD	Reserved
4	LSW1_AD	Load SW 1 active discharge, if it is configured to LED, active discharge resistor is always off. **0 —** Disabled **1 —** Enabled when Load SW1 is off (default)
3 to 2	RSVD	Reserved
1 to 0	LSW1_EN	Load SW 1 Enable mode **00 —** OFF **01 —** ON at RUN State (default) **10 —** ON at ACTIVE mode or STANDBY mode, OFF at DPSTANDBY **11 —** ON at ACTIVE mode, OFF at STANDBY or DPSTANDBY

8.2.56 LSW2_CTRL

Load switch 2 configuration register

Table 138. LSW2_CTRL register (address 41h) bit allocation

Bit	7	6	5	4	3	2	1	0
Symbol	LSW2_CFG	RSVD		LSW2_AD	RSVD		LSW2_EN	
Reset	0	0	0	1	0	0	0	1
Access	R/W	R/W	R/W	R/W	R/W	R/W	R/W	R/W

Table 139. LSW2_CTRL register (address 41h) bit descriptions

Bit	Symbol	Description
7	LSW2_CFG	Load SW 2 Configuration **0 —** Load switch (default) **1 —** LED driver
6 to 5	RSVD	Reserved
4	LSW2_AD	Load SW 2 active discharge, if it is configured to LED, active discharge resistor is always off. **0 —** Disabled **1 —** Enabled when Load SW1 is off (default)
3 to 2	RSVD	Reserved
1 to 0	LSW2_EN	Load SW 2 Enable mode **00 —** OFF **01 —** ON at RUN State (default) **10 —** ON at ACTIVE mode or STANDBY mode, OFF at DPSTANDBY

All information provided in this document is subject to legal disclaimers.

© 2025 NXP B.V. All rights reserved.

Table 139. LSW2_CTRL register (address 41h) bit descriptions*...continued*

Bit	Symbol	Description
		11 — ON at ACTIVE mode, OFF at STANDBY or DPSTANDBY

8.2.57 LSW3_CTRL

Load switch 3 configuration register

Table 140. LSW3_CTRL register (address 42h) bit allocation

Bit	7	6	5	4	3	2	1	0
Symbol	LSW3_CFG	RSVD		LSW3_AD	RSVD		LSW3_EN	
Reset	0	0	0	1	0	0	0	1
Access	R/W	R/W	R/W	R/W	R/W	R/W	R/W	R/W

Table 141. LSW3_CTRL register (address 42h) bit descriptions

Bit	Symbol	Description
7	LSW3_CFG	Load SW 3 Configuration **0 —** Load switch (default) **1 —** LED driver
6 to 5	RSVD	Reserved
4	LSW3_AD	Load SW 3 active discharge, if it is configured to LED, active discharge resistor is always off. **0 —** Disabled **1 —** Enabled when Load SW1 is off (default)
3 to 2	RSVD	Reserved
1 to 0	LSW3_EN	Load SW 3 Enable mode **00 —** OFF **01 —** ON at RUN State (default) **10 —** ON at ACTIVE mode or STANDBY mode, OFF at DPSTANDBY **11 —** ON at ACTIVE mode, OFF at STANDBY or DPSTANDBY

8.2.58 LSW4_CTRL

Load switch 4 configuration register

Table 142. LSW4_CTRL register (address 43h) bit allocation

Bit	7	6	5	4	3	2	1	0
Symbol	LSW4_CFG	RSVD		LSW4_AD	RSVD		LSW4_EN	
Reset	0	0	0	1	0	0	0	1
Access	R/W	R/W	R/W	R/W	R/W	R/W	R/W	R/W

Table 143. LSW4_CTRL register (address 43h) bit descriptions

Bit	Symbol	Description
7	LSW4_CFG	Load SW 4 Configuration **0 —** Load switch (default) **1 —** LED driver
6 to 5	RSVD	Reserved

All information provided in this document is subject to legal disclaimers.

© 2025 NXP B.V. All rights reserved.

Table 143. LSW4_CTRL register (address 43h) bit descriptions...*continued*

Bit	Symbol	Description
4	LSW4_AD	Load SW 4 active discharge, if it is configured to LED, active discharge resistor is always off. **0 —** Disabled **1 —** Enabled when Load SW1 is off (default)
3 to 2	RSVD	Reserved
1 to 0	LSW4_EN	Load SW 4 Enable mode **00 —** OFF **01 —** ON at RUN State (default) **10 —** ON at ACTIVE mode or STANDBY mode, OFF at DPSTANDBY **11 —** ON at ACTIVE mode, OFF at STANDBY or DPSTANDBY

8.2.59 LED1_CTRL

LED1 Enable and brightness configuration

Table 144. LED1_CTRL register (address 44h) bit allocation

Bit	7	6	5	4	3	2	1	0
Symbol	LED1_EN		RSVD	LED1_BRT				
Reset	0	0	0	0	0	0	0	0
Access	R/W	R/W	R/W	R/W	R/W	R/W	R/W	R/W

Table 145. LED1_CTRL register (address 44h) bit descriptions

Bit	Symbol	Description
7 to 6	LED1_EN	Load SW1 LED enable mode only when LSW1_CFG is set to 01b. **00 —** OFF (default) **01 —** Enable with Constant current **10 —** Enable with Pattern 1 BLINK mode **11 —** Enable with Pattern 2 BLINK mode
5	RSVD	Reserved
4 to 0	LED1_BRT	LED1 brightness setting Programmable from 0.625 mA to 20 mA in 0.625 mA steps See Table 146

Table 146. LED1_BRT values

0x00 : 0.625 mA	0x08 : 5.625 mA	0x10 : 10.625 mA	0x18 : 15.625 mA
0x01 : 1.250 mA	0x09 : 6.250 mA	0x11 : 11.250 mA	0x19 : 16.250 mA
0x02 : 1.875 mA	0x0A : 6.875 mA	0x12 : 11.875 mA	0x1A : 16.875 mA
0x03 : 2.500 mA	0x0B : 7.500 mA	0x13 : 12.500 mA	0x1B : 17.500 mA
0x04 : 3.125 mA	0x0C : 8.125 mA	0x14 : 13.125 mA	0x1C : 18.125 mA
0x05 : 3.750 mA	0x0D : 8.750 mA	0x15 : 13.750 mA	0x1D : 18.750 mA
0x06 : 4.375 mA	0x0E : 9.375 mA	0x16 : 14.375 mA	0x1E : 19.375 mA
0x07 : 5.000 mA	0x0F : 10.000 mA	0x17 : 15.000 mA	0x1F : 20.000 mA

All information provided in this document is subject to legal disclaimers.

© 2025 NXP B.V. All rights reserved.

8.2.60 LED2_CTRL

LED2 Enable and brightness configuration

Table 147. LED2_CTRL register (address 45h) bit allocation

Bit	7	6	5	4	3	2	1	0
Symbol	LED2_EN		RSVD	LED2_BRT				
Reset	0	0	0	0	0	0	0	0
Access	R/W	R/W	R/W	R/W	R/W	R/W	R/W	R/W

Table 148. LED2_CTRL register (address 45h) bit descriptions

Bit	Symbol	Description
7 to 6	LED2_EN	Load SW2 LED enable mode only when LSW2_CFG is set to 01b. **00 —** OFF (default) **01 —** Enable with Constant current **10 —** Enable with Pattern 1 BLINK mode **11 —** Enable with Pattern 2 BLINK mode
5	RSVD	Reserved
4 to 0	LED2_BRT	LED2 brightness setting Programmable from 0.625 mA to 20 mA in 0.625 mA steps See Table 149

Table 149. LED2_BRT values

0x00 : 0.625 mA	0x08 : 5.625 mA	0x10 : 10.625 mA	0x18 : 15.625 mA
0x01 : 1.250 mA	0x09 : 6.250 mA	0x11 : 11.250 mA	0x19 : 16.250 mA
0x02 : 1.875 mA	0x0A : 6.875 mA	0x12 : 11.875 mA	0x1A : 16.875 mA
0x03 : 2.500 mA	0x0B : 7.500 mA	0x13 : 12.500 mA	0x1B : 17.500 mA
0x04 : 3.125 mA	0x0C : 8.125 mA	0x14 : 13.125 mA	0x1C : 18.125 mA
0x05 : 3.750 mA	0x0D : 8.750 mA	0x15 : 13.750 mA	0x1D : 18.750 mA
0x06 : 4.375 mA	0x0E : 9.375 mA	0x16 : 14.375 mA	0x1E : 19.375 mA
0x07 : 5.000 mA	0x0F : 10.000 mA	0x17 : 15.000 mA	0x1F : 20.000 mA

8.2.61 LED3_CTRL

LED3 Enable and brightness configuration

Table 150. LED3_CTRL register (address 46h) bit allocation

Bit	7	6	5	4	3	2	1	0
Symbol	LED3_EN		RSVD	LED3_BRT				
Reset	0	0	0	0	0	0	0	0
Access	R/W	R/W	R/W	R/W	R/W	R/W	R/W	R/W

All information provided in this document is subject to legal disclaimers.

© 2025 NXP B.V. All rights reserved.

Table 151. LED3_CTRL register (address 46h) bit descriptions

Bit	Symbol	Description
7 to 6	LED3_EN	Load SW3 LED enable mode only when LSW3_CFG is set to 01b. **00 —** OFF (default) **01 —** Enable with Constant current **10 —** Enable with Pattern 1 BLINK mode **11 —** Enable with Pattern 2 BLINK mode
5	RSVD	Reserved
4 to 0	LED3_BRT	LED3 brightness setting Programmable from 0.625 mA to 20 mA in 0.625 mA steps See Table 152

Table 152. LED3_BRT values

0x00 : 0.625 mA	0x08 : 5.625 mA	0x10 : 10.625 mA	0x18 : 15.625 mA
0x01 : 1.250 mA	0x09 : 6.250 mA	0x11 : 11.250 mA	0x19 : 16.250 mA
0x02 : 1.875 mA	0x0A : 6.875 mA	0x12 : 11.875 mA	0x1A : 16.875 mA
0x03 : 2.500 mA	0x0B : 7.500 mA	0x13 : 12.500 mA	0x1B : 17.500 mA
0x04 : 3.125 mA	0x0C : 8.125 mA	0x14 : 13.125 mA	0x1C : 18.125 mA
0x05 : 3.750 mA	0x0D : 8.750 mA	0x15 : 13.750 mA	0x1D : 18.750 mA
0x06 : 4.375 mA	0x0E : 9.375 mA	0x16 : 14.375 mA	0x1E : 19.375 mA
0x07 : 5.000 mA	0x0F : 10.000 mA	0x17 : 15.000 mA	0x1F : 20.000 mA

8.2.62 LED4_CTRL

LED4 Enable and brightness configuration

Table 153. LED4_CTRL register (address 47h) bit allocation

Bit	7	6	5	4	3	2	1	0
Symbol	LED4_EN		RSVD	LED4_BRT				
Reset	0	0	0	0	0	0	0	0
Access	R/W	R/W	R/W	R/W	R/W	R/W	R/W	R/W

Table 154. LED4_CTRL register (address 47h) bit descriptions

Bit	Symbol	Description
7 to 6	LED4_EN	Load SW4 LED enable mode only when LSW4_CFG is set to 01b. **00 —** OFF (default) **01 —** Enable with Constant current **10 —** Enable with Pattern 1 BLINK mode **11 —** Enable with Pattern 2 BLINK mode
5	RSVD	Reserved
4 to 0	LED4_BRT	LED4 brightness setting Programmable from 0.625 mA to 20 mA in 0.625 mA steps See Table 155

All information provided in this document is subject to legal disclaimers.

© 2025 NXP B.V. All rights reserved.

Table 155. LED4_BRT values

0x00 : 0.625 mA	0x08 : 5.625 mA	0x10 : 10.625 mA	0x18 : 15.625 mA
0x01 : 1.250 mA	0x09 : 6.250 mA	0x11 : 11.250 mA	0x19 : 16.250 mA
0x02 : 1.875 mA	0x0A : 6.875 mA	0x12 : 11.875 mA	0x1A : 16.875 mA
0x03 : 2.500 mA	0x0B : 7.500 mA	0x13 : 12.500 mA	0x1B : 17.500 mA
0x04 : 3.125 mA	0x0C : 8.125 mA	0x14 : 13.125 mA	0x1C : 18.125 mA
0x05 : 3.750 mA	0x0D : 8.750 mA	0x15 : 13.750 mA	0x1D : 18.750 mA
0x06 : 4.375 mA	0x0E : 9.375 mA	0x16 : 14.375 mA	0x1E : 19.375 mA
0x07 : 5.000 mA	0x0F : 10.000 mA	0x17 : 15.000 mA	0x1F : 20.000 mA

8.2.63 LED_P1_RAMP

Pattern 1 LED ramp up down configuration

Table 156. LED_P1_RAMP register (address 48h) bit allocation

Bit	7	6	5	4	3	2	1	0
Symbol	P1_UP_STEP		P1_UP_DLY		P1_DN_STEP		P1_DN_DLY	
Reset	0	0	0	0	0	0	0	0
Access	R/W	R/W	R/W	R/W	R/W	R/W	R/W	R/W

Table 157. LED_P1_RAMP register (address 48h) bit descriptions

Bit	Symbol	Description
7 to 6	P1_UP_STEP	Pattern 1 LED Ramp Up PWM duty step size from 0 % to 100 % **00 —** 128 steps (default) **01 —** 64 steps **10 —** 32 steps **11 —** 16 step
5 to 4	P1_UP_DLY	Pattern 1 LED Ramp Up delay per step **00 —** 4.096 ms (default) **01 —** 8.192 ms **10 —** 12.288 ms **11 —** 16.384 ms
3 to 2	P1_DN_STEP	Pattern 1 LED Ramp Down PWM duty step size from 0 % to 100 % **00 —** 128 steps (default) **01 —** 64 steps **10 —** 32 steps **11 —** 16 step
1 to 0	P1_DN_DLY	Pattern 1 LED Ramp Down delay per step **00 —** 4.096 ms (default) **01 —** 8.192 ms **10 —** 12.288 ms **11 —** 16.384 ms

8.2.64 LED_P1_BLNK

Pattern 1 LED blink time configuration

All information provided in this document is subject to legal disclaimers.

© 2025 NXP B.V. All rights reserved.

Table 158. LED_P1_BLNK register (address 49h) bit allocation

Bit	7	6	5	4	3	2	1	0
Symbol	LEDTON1				LEDTOFF1			
Reset	0	0	0	0	0	0	0	0
Access	R/W	R/W	R/W	R/W	R/W	R/W	R/W	R/W

Table 159. LED_P1_BLNK register (address 49h) bit descriptions

Bit	Symbol	Description
7 to 6	LEDTON1	Pattern 1 LED ON Time Settings See Table 160
5 to 4	LEDTOFF1	Pattern 1 LED OFF Time Settings See Table 161

Table 160. LEDTON1 values

0x0 : 0.10 s	0x4 : 0.50 s	0x8 : 1.50 s	0xC : 2.50 s
0x1 : 0.20 s	0x5 : 0.75 s	0x9 : 1.75 s	0xD : 2.75 s
0x2 : 0.30 s	0x6 : 1.00 s	0xA : 2.00 s	0xE : 3.00 s
0x3 : 0.40 s	0x7 : 1.25 s	0xB : 2.25 s	0xF : 3.25 s

Table 161. LEDTOFF1 values

0x0 : 0.10 s	0x4 : 0.50 s	0x8 : 1.50 s	0xC : 2.50 s
0x1 : 0.20 s	0x5 : 0.75 s	0x9 : 1.75 s	0xD : 2.75 s
0x2 : 0.30 s	0x6 : 1.00 s	0xA : 2.00 s	0xE : 3.00 s
0x3 : 0.40 s	0x7 : 1.25 s	0xB : 2.25 s	0xF : 3.25 s

8.2.65 LED_P2_RAMP

Pattern 2 LED ramp up down configuration

Table 162. LED_P2_RAMP register (address 4Ah) bit allocation

Bit	7	6	5	4	3	2	1	0
Symbol	P2_UP_STEP		P2_UP_DLY		P2_DN_STEP		P2_DN_DLY	
Reset	0	0	0	0	0	0	0	0
Access	R/W	R/W	R/W	R/W	R/W	R/W	R/W	R/W

Table 163. LED_P2_RAMP register (address 4Ah) bit descriptions

Bit	Symbol	Description
7 to 6	P2_UP_STEP	Pattern 2 LED Ramp Up PWM duty step size from 0 % to 100 % **00 —** 128 steps (default) **01 —** 64 steps **10 —** 32 steps **11 —** 16 step

All information provided in this document is subject to legal disclaimers.

© 2025 NXP B.V. All rights reserved.

Table 163. LED_P2_RAMP register (address 4Ah) bit descriptions...*continued*

Bit	Symbol	Description
5 to 4	P2_UP_DLY	Pattern 2 LED Ramp Up delay per step **00 —** 4.096 ms (default) **01 —** 8.192 ms **10 —** 12.288 ms **11 —** 16.384 ms
3 to 2	P2_DN_STEP	Pattern 2 LED Ramp Down PWM duty step size from 0 % to 100 % **00 —** 128 steps (default) **01 —** 64 steps **10 —** 32 steps **11 —** 16 step
1 to 0	P2_DN_DLY	Pattern 2 LED Ramp Down delay per step **00 —** 4.096 ms (default) **01 —** 8.192 ms **10 —** 12.288 ms **11 —** 16.384 ms

8.2.66 LED_P2_BLNK

Pattern 2 LED blink time configuration

Table 164. LED_P2_BLNK register (address 4Bh) bit allocation

Bit	7	6	5	4	3	2	1	0
Symbol	LEDTON2				LEDTOFF2			
Reset	0	0	0	0	0	0	0	0
Access	R/W	R/W	R/W	R/W	R/W	R/W	R/W	R/W

Table 165. LED_P2_BLNK register (address 4Bh) bit descriptions

Bit	Symbol	Description
7 to 4	LEDTON2	Pattern 2 LED ON Time Settings See Table 166
3 to 0	LEDTOFF2	Pattern 2 LED OFF Time Settings See Table 167

Table 166. LEDTON2

0x0 : 0.10 s	0x4 : 0.50 s	0x8 : 1.50 s	0xC : 2.50 s
0x1 : 0.20 s	0x5 : 0.75 s	0x9 : 1.75 s	0xD : 2.75 s
0x2 : 0.30 s	0x6 : 1.00 s	0xA : 2.00 s	0xE : 3.00 s
0x3 : 0.40 s	0x7 : 1.25 s	0xB : 2.25 s	0xF : 3.25 s

Table 167. LEDTOFF2

0x0 : 0.10 s	0x4 : 0.50 s	0x8 : 1.50 s	0xC : 2.50 s
0x1 : 0.20 s	0x5 : 0.75 s	0x9 : 1.75 s	0xD : 2.75 s

All information provided in this document is subject to legal disclaimers.

© 2025 NXP B.V. All rights reserved.

Table 167. LEDTOFF2*...continued*

0x2 : 0.30 s	0x6 : 1.00 s	0xA : 2.00 s	0xE : 3.00 s
0x3 : 0.40 s	0x7 : 1.25 s	0xB : 2.25 s	0xF : 3.25 s

8.2.67 REG_LOCK

Output voltage configuration unlock key

Table 168. REG_LOCK register (address 4Eh) bit allocation

Bit	7	6	5	4	3	2	1	0
Symbol	UNLOCK_KEY							
Reset	0	0	0	0	0	0	0	0
Access	R/W	R/W	R/W	R/W	R/W	R/W	R/W	R/W

Table 169. REG_LOCK register (address 4Eh) bit descriptions

Bit	Symbol	Description
7 to 0	UNLOCK_KEY	Unlock key is written to change regulator output configuration. **01011100 —** Unlock regulator output configuration registers **Others —** Lock regulator output configuration registers

9 Application design-in information

9.1 Reference schematic

PCA9460 reference schematic with 8ULP is illustrated in Figure 24.

All information provided in this document is subject to legal disclaimers.

© 2025 NXP B.V. All rights reserved.

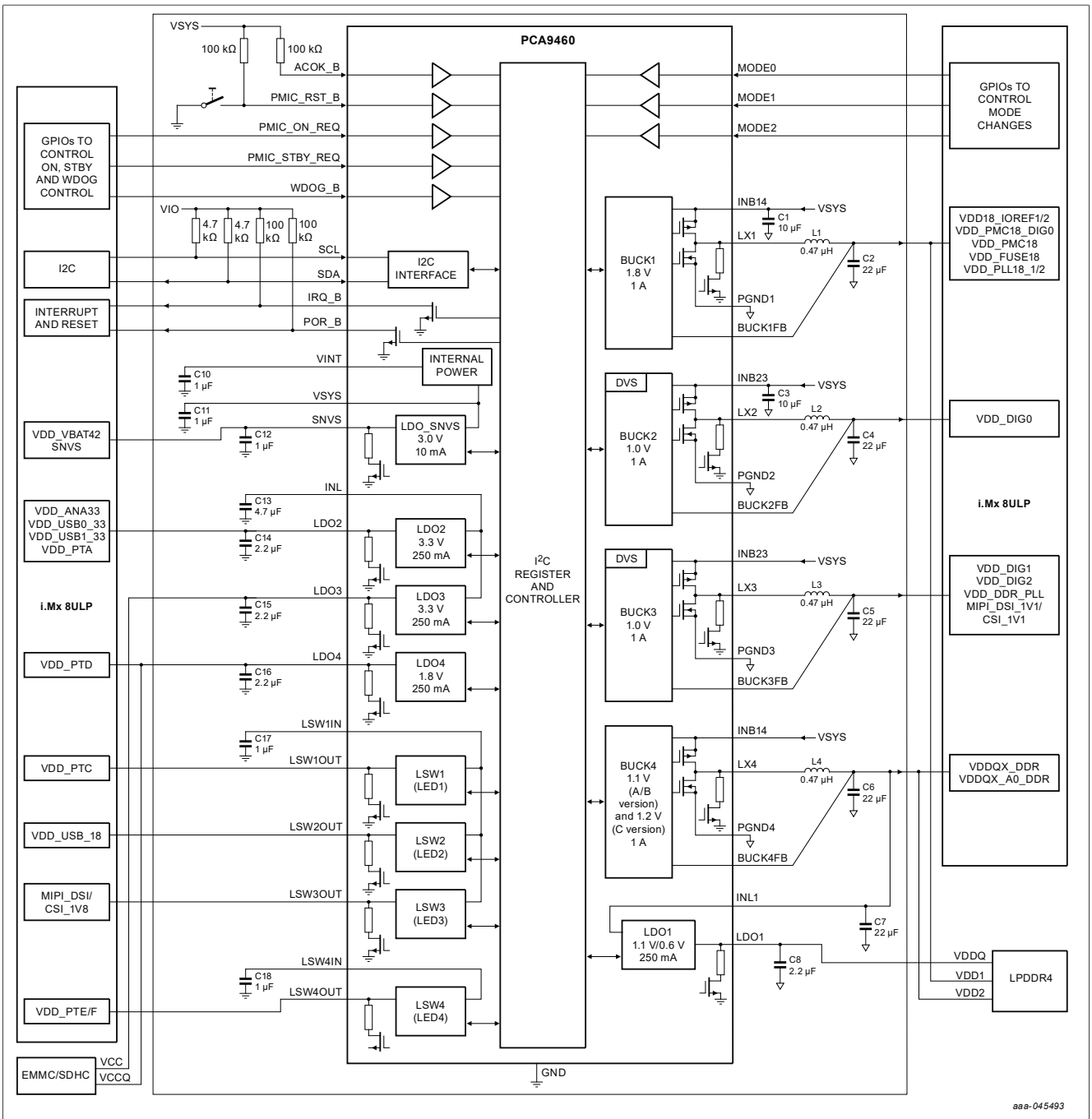

Figure 24. PCA9460 i.Mx 8ULP application schematic

9.1.1 External BOM in reference schematic

Table 170 shows external BOM in reference schematic

Table 170. External BOM

Ref	Block	Pin	Part number	Size [mm]	Value
L1	BUCK	LX1	WPN252012ER47MT	2012	0.47 µH

All information provided in this document is subject to legal disclaimers.

© 2025 NXP B.V. All rights reserved.

Table 170. External BOM...*continued*

Ref	Block	Pin	Part number	Size [mm]	Value
L2	BUCK	LX2	WPN252012ER47MT	2012	0.47 µH
L3	BUCK	LX3	WPN252012ER47MT	2012	0.47 µH
L4	BUCK	LX4	WPN252012ER47MT	2012	0.47 µH
C1	BUCK	INB14	GRM188R60J106ME	1608	10 µF
C2	BUCK	Buck Output	GRM158C80G226ME	1005	22 µF
C3	BUCK	INB23	GRM188R60J106ME	1608	10 µF
C4	BUCK	BUCK Output	GRM158C80G226ME	1005	22 µF
C5	BUCK	BUCK Output	GRM158C80G226ME	1005	22 µF
C6	BUCK	BUCK Output	GRM158C80G226ME	1005	22 µF
C7	LDO	INL1	GRM155R61C225KE	1005	2.2 µF
C8	LDO	LDO1	GRM155R61C225KE	1005	2.2 µF
C10	VINT	VINT	GRM155R61C105KA	1005	1 µF
C11	VSYS	VSYS	GRM155R61C105KA	1005	1 µF
C12	LDO	LDOSNVS	GRM155R61C105KA	1005	1 µF
C13	LDO	INL	GRM155R60J475ME	1005	4.7 µF
C14	LDO	LDO2	GRM155R61C225KE	1005	2.2 µF
C15	LDO	LDO3	GRM155R61C225KE	1005	2.2 µF
C16	LDO	LDO4	GRM155R61C225KE	1005	2.2 µF
C17	LSW	LSW1IN	GRM155R61C105KA	1005	1 µF
C18	LSW	LSW4IN	GRM155R61C105KA	1005	1 µF

9.2 Typical application

The PCA9460 devices have only a few design requirements. Use the following parameters for the design

- 1 µF bypass capacitor on VINT and VSYS, located as close as possible to those pins to ground
- Input capacitors must be present on the INB and INL supplies if used
- Output inductors and capacitors must be used on the outputs of the BUCK converters if used
- Output capacitors must be used on the outputs of the LDOs

9.2.1 Detailed design procedure

9.2.2 Inductor selection for buck converters

Each of the converters in the PCA9460 typically use a 0.47 µH output inductor which has to be rated for its DC resistance and saturation current. The DC resistance of the inductance influences directly the efficiency of the converter. Therefore, an inductor with lowest DC resistance must be selected for highest efficiency.

Equation 1 calculates the peak-to-peak inductor ripple current under static load conditions. The saturation current of the inductor must be rated higher than the maximum inductor current as calculated with Equation 2. This is needed because during heavy load transient the inductor current rises above the calculated value.

All information provided in this document is subject to legal disclaimers.

© 2025 NXP B.V. All rights reserved.

$$\Delta I_L = V_{out} \times \frac{1-\frac{V_{out}}{V_{in_max}}}{L \times f} \quad (1)$$

$$I_{L.max} = I_{out.max} + \frac{\Delta I_L}{2} \quad (2)$$

Where

f = switching frequency (≈2 MHz)

L = Inductance

ΔI_L = Peak to peak inductor ripple current

$I_{L.max}$ = Maximum inductor current

$I_{out.max}$ = Maximum output DC current

A conservative approach is to select the inductor current rating just for the maximum switch current of the PCA9460

9.2.3 Output capacitor selection for buck converters

The fast response adaptive constant ON time control scheme of the buck converters implemented in the PCA9460 allow the use of small ceramic capacitors with a typical value of 22 µF for each converter without having large output voltage under and overshoots during heavy load transients. Ceramic capacitors having low ESR values have the lowest output voltage ripple and are recommended. See Table 19 for recommended.

If ceramic output capacitors are used, the capacitor RMS ripple current rating always meets the application requirements. Just for completeness, the RMS ripple current is calculated in Equation 3.

$$I_{RMS.COUT} = \mathrm{Vout} \times \frac{1-\frac{\mathrm{Vout}}{\mathrm{Vin}}}{\mathrm{L} \times \mathrm{f}} \times \frac{1}{2\sqrt{3}} \quad (3)$$

At nominal load current, the inductive converters operate in PWM mode. The overall output voltage ripple is the sum of the voltage spike caused by the output capacitor ESR plus the voltage ripple caused by charging and discharging the output capacitor:

$$\Delta\,\mathrm{Vout} = \mathrm{Vout} \times \frac{1-\frac{Vout}{Vin}}{\mathrm{L} \times \mathrm{f}} \times \left(\frac{1}{8 \times Cout \times f} + ESR\right) \quad (4)$$

Where

The highest output voltage ripple occurs at the highest input voltage Vin.

At light load currents, the converters operate in PFM mode and the output voltage ripple is dependent on the output capacitor value. The output voltage ripple is set by the internal comparator delay and the external capacitor. The typical output voltage ripple is less than 1 % of the nominal output voltage.

9.2.4 Input capacitor selection for buck converters

Low ESR input capacitor is highly recommended for best input voltage filtering and minimizing the interference with other circuits caused by high input voltage spikes because of the nature of buck converter. Each DC-DC

All information provided in this document is subject to legal disclaimers.

© 2025 NXP B.V. All rights reserved.

converter requires a 10 µF ceramic input capacitor on its input pins. The input capacitor could be increased without any limit for better input voltage filtering.

9.3 Layout guide

Figure 25 shows layout guidance.

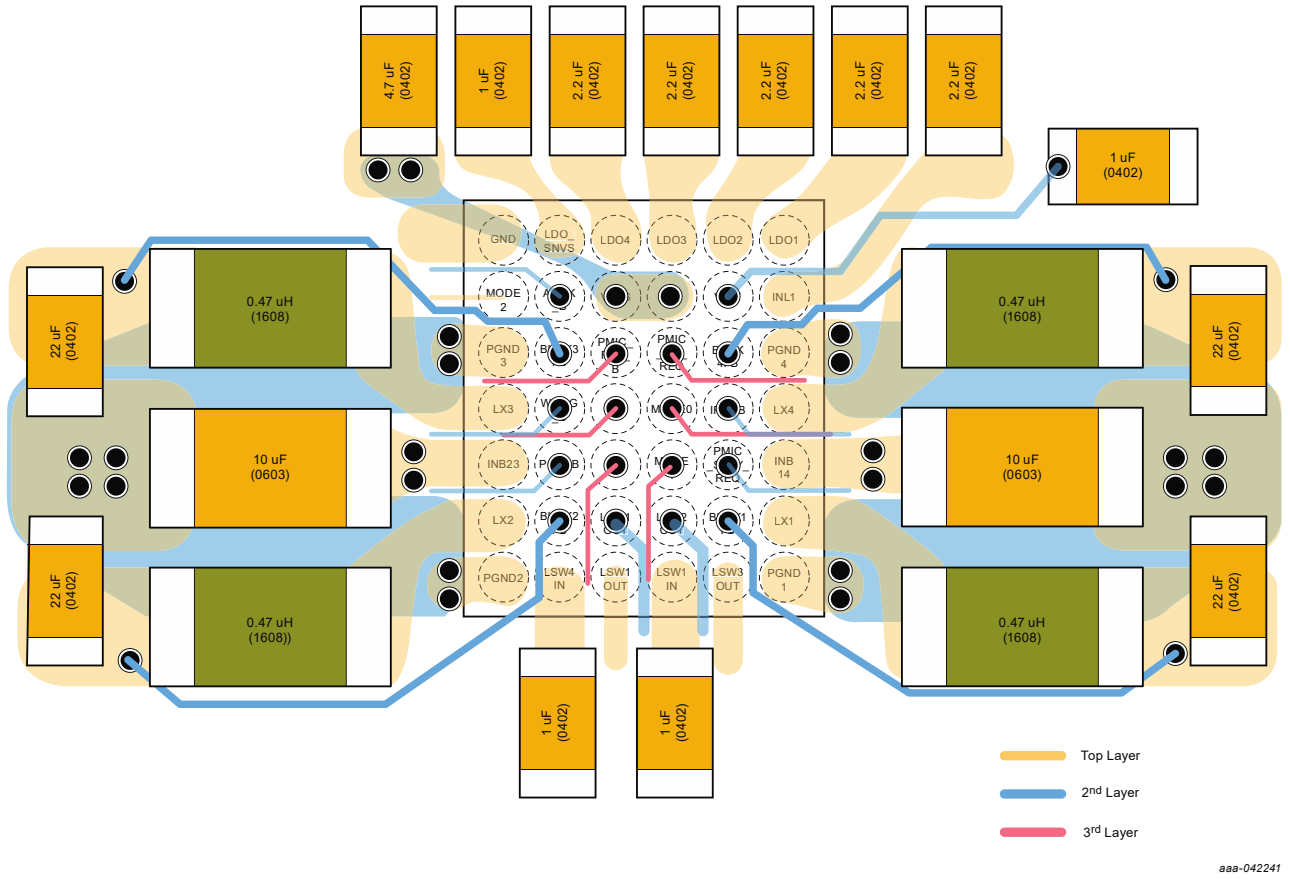

Figure 25. PCA9460 layout

10 Limiting values

Table 171. Limiting values (Absolute Maximum Ratings)

Symbol	Parameter	Conditions	Min	Max	Unit
$V_{range(gnd)}$	voltage range (with respect to GND)	pins VSYS, INL	-0.5	+6.0	V
		pins INB14, INB23, INL1	-0.5	VSYS + 0.5	V
		pins LX1, LX4	-0.5	INB14 + 0.5	V
		pins LX2, LX3	-0.5	INB23 + 0.5	V
		pins BUCK1FB, BUCK2FB, BUCK3FB, BUCK4FB	-0.5	VSYS + 0.5	V
		pin LDO1	-0.5	V_{INL1}+0.5	V
		pins LDO2, LDO3, LDO4	-0.5	V_{INL}+0.5	V

All information provided in this document is subject to legal disclaimers.

© 2025 NXP B.V. All rights reserved.

Table 171. Limiting values (Absolute Maximum Ratings)*...continued*

Symbol	Parameter	Conditions	Min	Max	Unit
		pin VINT	-0.5	+1.8	V
		pins LSWx_CFG = 0, LSW; LSW1IN, LSW4IN	-0.5	VSYS + 0.5	V
		pins LSWx_CFG = 1, LED; LSW1IN, LSW4IN	-0.5	+6.0	V
		pins LSW1OUT, LSW2 OUT, LSW3OUT	-0.5	V_{LSW1IN}+0.5	V
		pins LSW4OUT	-0.5	V_{LSW4IN}+0.5	V
		pins PMIC_ON_REQ, POR_B PMIC_STBY_ REQ, WDOG_B, IRQ_B, SCL, SDA, MODE0, MODE1, MODE2	-0.5	VSYS + 0.5	V
		pins ACOK_B, PMIC_ RST_B	-0.5	VSYS + 0.5	V
I_O	output current	pins LX1, LX2, LX3, LX4; RMS current		1.5	A
		pins LSW1OUT, LSW2 OUT, LSW3OUT, LSW4OUT		0.3	A
T_j	junction temperature		-40	+150	°C
V_{ESD}	electrostatic discharge voltage - all pins	HBM (JESD22-001)	-2	+2	kV
		CDM (JESD22-C101E)	-500	500	V

11 Recommended operating conditions

Table 172. Recommended operating conditions

Symbol	Parameter	Conditions	Min	Max	Unit
$V_{range(gnd)}$	voltage range (with respect to GND)	on pins VSYS[1], INL	2.7	5.5	V
		on pin INL1	0.7	5.5	V
		on pins INB14, INB23	2.7	5.5	V
		on pins LSW1IN, LSW4IN	1.2	5.5	V
T_j	junction temperature		-40	+125	°C
T_{amb}	ambient temperature		-40	+85	°C
T_{stg}	storage temperature		-55	+85	°C

[1] Ensure there is no residual voltage at VSYS higher than 200 mV during power up. This requirement applies only to PCA960AUK, PCA960BUK, and PCA960CUK part numbers.

All information provided in this document is subject to legal disclaimers.

© 2025 NXP B.V. All rights reserved.

12 Thermal characteristics

Table 173. Thermal characteristics

Symbol	Parameter	Board Type[1]	Typ	Unit
$R_{\theta JA}$	Thermal resistance from junction to ambient[2]	JESD51-9, 2s2p	46	°C/W
Ψ_{JT}	Junction to Top of package Thermal Characterization Parameter[2]	JESD51-9, 2s2p	2	°C/W

[1] Thermal test board meets JEDEC specification for this package (JESD51-9)
[2] Determined in accordance to JEDEC JESD51-2A natural convection environment. Thermal resistance data in this report is solely for a thermal performance comparison of one package to another in a standardized specified environment. It is not meant to predict the performance of a package in an application-specific environment

12.1 Rating data

Junction to ambient thermal resistance nomenclature: the JEDEC specification reserves the symbol RθJA or θJA (Theta-JA) strictly for junction-to-ambient thermal resistance on a 1s test board in a natural convection environment. RθJMA or θJMA (Theta-JMA) is used for both junction-to-ambient on a 2s2p test board in natural convection and for junction-to-ambient with forced convection on both 1s and 2s2p test boards. It is anticipated the generic name, Theta-JA, continues to be commonly used. The JEDEC standards can be consulted at http://www.jedec.org.

12.2 Estimation of junction temperature

An estimation of the chip junction temperature TJ can be obtained from the equation:

TJ = TA + (RθJA x PD)

with:

TA = Ambient temperature for the package in °C

RθJA = Junction to ambient thermal resistance in °C/W

PD = Power dissipation in the package in W

The junction-to-ambient thermal resistance is an industry standard value providing a quick and easy estimation of thermal performance. Unfortunately, there are two values in common usage: the value determined on a single-layer board RθJA and the value obtained on a four-layer board RθJMA. Actual application PCBs show a performance close to the simulated four-layer board value, although this may be somewhat degraded in case of significant power dissipated by other components placed close to the device.

At a known board temperature, the junction temperature TJ is estimated using the following equation:

TJ = TB + (RθJB x PD)

with:

TB = Board temperature at the package perimeter in °C

RθJB = Junction to board thermal resistance in °C/W

PD = Power dissipation in the package in W

All information provided in this document is subject to legal disclaimers.

© 2025 NXP B.V. All rights reserved.

13 Electrical characteristics

13.1 Top level parameter

Table 174. Top level parameter description

Unless otherwise specified, VSYS = 3.8 V, V_{INB14} = V_{INB23} = 3.8 V, V_{INL} = 3.8 V, V_{INL1} = V_{BUCK4}, T_A= –40 °C ~ +85 °C

Symbol	Parameter	Conditions		Min	Typ	Max	Unit
Quiescent Current							
$I_{Q_Shutdown}$	Shutdown Current	LDOSNVS are ON and no load, PMIC_ ON_REQ = L	25 °C		1.4	3	µA
			-40 °C ~ 85 °C		1.4	20	
$I_{Q_STDBY_1}$	System Standby current at low power mode	LDOSNVS and BUCK1 are ON and no load. PWR_SAVE = 01b, Bx_LPMODE = 01b, PMIC_STBY_REQ= H	25 °C		3.5	7	µA
			-40 °C ~ 85 °C		3.5	22	
$I_{Q_STDBY_2}$	System Standby current	All Regulators are ON and no load. PWR_SAVE = 01b, Bx_LPMODE = 01b, PMIC_STBY_REQ= H	25 °C		8.8	20	µA
			–40 °C ~ 85 °C		8.8	35	
		All Regulators are ON and no load. PWR_SAVE = 11b, Bx_LPMODE = 01b, PMIC_STBY_REQ= H	25 °C		20	32	µA
			–40 °C ~ 85 °C		20	55	
I_{Q_ACTIVE}	System Active current	All Regulators are ON and no load. PWR_SAVE = 01b, Bx_LPMODE = 11b, PMIC_STBY_REQ= L	–40 °C ~ 85 °C	20	35	85	µA
VSYS							
V_{SYS_UVLO}	VSYS UVLO	Rising – OTP Programmable 00b = 2.65 V **01b = 2.85 V** 10b = 3.0 V 11b = 3.3 V		2.7	2.85	3.0	V
$V_{SYS_UVLO_H}$	VSYS UVLO Hysteresis	Falling			200		mV
VINT							
VINT	Internal Power supply	VSYS = 3.8 V		1.4	1.5	1.6	V
Low VSYS							
V_{LOW_VSYS}	Low VSYS	Low VSYS threshold above V_{SYS_UVLO}, LOW_VSYS [7:6] = 01b		150	200	250	mV
$V_{LOW_VSYS_HYS}$	Low VSYS Hysteresis				100		mV
Thermal Shutdown							
T_{JSHDN}	Thermal Shutdown	Tj Rising, 15°C hysteresis			150		°C
T_{J80}	Thermal interrupt1	Tj Rising, 15°C hysteresis			80		°C
T_{J100}	Thermal interrupt2	Tj Rising, 15°C hysteresis			100		°C
T_{JHYS}	Thermal Hysteresis				15		°C
Logic and Control signals							
V_{IL}	Input Low level	PMIC_ON_REQ, PMIC_STBY_REQ, WDOG_B, MODE0, MODE1, MODE2, PMIC_RST_B, ACOK_B				0.4	V

All information provided in this document is subject to legal disclaimers.

© 2025 NXP B.V. All rights reserved.

Table 174. Top level parameter description*...continued*

Unless otherwise specified, VSYS = 3.8 V, V_{INB14} = V_{INB23} = 3.8 V, V_{INL} = 3.8 V, V_{INL1} = V_{BUCK4}, T_A= –40 °C ~ +85 °C

Symbol	Parameter	Conditions	Min	Typ	Max	Unit
V_{IH}	Input High level	PMIC_ON_REQ, PMIC_STBY_REQ, WDOG_B, MODE0, MODE1, MODE2, PMIC_RST_B, ACOKB	1.4			V
I_{LEAK}	Logic Input leakage current	PMIC_ON_REQ, PMIC_STBY_REQ, WDOG_B, MODE0, MODE1, MODE2, PMIC_RST_B, ACOKB V_{Logic} = 5.5 V, VSYS = 5.5 V	-1		+1	µA
V_{OL}	Output Low level	IRQ_B, POR_B, I_{OL} = 6mA			0.4	V
I_{LEAK}	Output high leakage current	IRQ_B, POR_B, V_{Logic} = 5.5 V, VSYS = 5.5 V	-1		+1	µA
Timing spec						
t_{SNVS}	Maximum time to enable LDO_SNVS from VSYS UVLO detected			20		ms
t_{ON_DEB}	PMIC_ON_REQ debounce time		40	50	60	µs
$t_{ACOK_B_DEB}$	ACOK_B debounce time	Falling	40	50	60	ms
$t_{ACOK_ONESHOT}$	ACOK_B Oneshot timer	Programmable, ACOK_B_OSTMR = 0b		2.5		sec
$t_{DEB_PMIC_RST_B}$	Debounce time of PMIC_RST_B	Programmable, PMIC_RST_B_DEB = 0b	16	20	24	ms
t_{ONKEY}	ON KEY timer of PMIC_RST_B	Programmable, ONKEY_TIMER = 01b	1.6	2	2.4	sec
$t_{RESETKEY}$	RESET KEY timer of PMIC_RST_B	Programmable, RESETKEY_TIMER = 101b	7.2	8	9.6	sec
t_{RESET_WAIT}	Wait time from RESETKEY detection to perform reset		80	100	120	ms
t_{ON_STEP}	Time step to turn on each regulator	Programmable, PSQ_TON_STEP = 01b	1.6	2	2.4	ms
t_{POK_EXP}	POK wait timerout during power ON sequence		8	10	12	ms
t_{OFF_STEP}	Time step to turn off each regulator	Programmable, PSQ_TOFF_STEP = 10b	6	8	10	ms
t_{RSTB}	Time from PUD_T16 Gr POK to POR_B release during Power on seq		16	20	24	ms
$t_{FLT_THSD_DEB}$	Debounce Time for Thermal fault		16	20	24	µs
t_{DEB_POKB}	Debounce time of regulator POKB		240	300	360	µs
$t_{FLT_SD_WAIT}$	Wait time to enter FAULT_SD after fault interrupt	At Standby and Run mode, programmable, tFLT_SD_WAIT = 0b	80	100	120	ms
$t_{FLT_SD_STAY}$	Time to stay at FAULT_SD to move other mode		80	100	120	ms
$t_{RESTART}$	Wait time to start power up after power down at cold reset	Programmable, Trestart = 0b	200	250	300	ms
$t_{PWR_HOLD_RST}$	Power Hold time after reset is performed		80	100	120	ms
t_{RESET}	POR_B low time at Warm reset		16	20	24	ms
t_{DEB_WDOGB}	Debounce time of WDOG_B		40	50	60	µs
$t_{FLT_POK_MSK}$	POK mask time when regulator is enabled at RUN/Standby mode		2.4	3	3.6	ms

All information provided in this document is subject to legal disclaimers.

© 2025 NXP B.V. All rights reserved.

Table 174. Top level parameter description...*continued*

Unless otherwise specified, VSYS = 3.8 V, V_{INB14} = V_{INB23} = 3.8 V, V_{INL} = 3.8 V, V_{INL1} = V_{BUCK4}, T_A= –40 °C ~ +85 °C

Symbol	Parameter	Conditions	Min	Typ	Max	Unit
DVS Timing spec						
t_{MAX_DIFF}	Maximum latency of MODE pins	SMART_MODE = 0b			0.1	µs
t_{DVS_EFF}		SMART_MODE = 0b		3	4	µs
t_{SETUP_MODE2}	MODE2 pin Setup time to select BUCK regulator	SMART_MODE = 1b	3			µs
t_{MIN_H}	MODE0, MODE1 pin Minimum High time	SMART_MODE = 1b	3			µs
t_{MIN_L}	MODE0, MODE1 pin Minimum Low time	SMART_MODE = 1b	2			µs
t_{MIN_GAP}	Minimum time to start MODE1 from falling edge of MODE0, vice versa	SMART_MODE = 1b	3			µs

13.2 BUCK1

Table 175. BUCK1 description

Unless otherwise specified, VSYS = 3.8 V, V_{INB14} = V_{INB23} = 3.8 V, V_{INL} = 3.8 V, V_{INL1} = V_{BUCK4}, T_A= –40 °C ~ +85 °C

Symbol	Parameter	Conditions	Min	Typ	Max	Unit
V_{INB1}	Input voltage range	INB14 pin [1]	2.7		5.5	V
I_Q	Quiescent current	Low power mode, IOUT = 0A, 25 °C		1.3	2.5	µA
		Normal mode, IOUT = 0A [1]		5.2	11	µA
I_{OUT_MAX}	Max Output Current	Low power mode, V_{BUCK1} = 1.8 V			100	mA
		Normal mode	1000			mA
V_{BUCK1_RANGE}	Programmable Output voltage range	I^2C programmable, 25 mV/step	0.6		3.4	V
V_{BUCK1}	DC Output Voltage Accuracy	V_{INB1} = 3.8 V, V_{BUCK1} = 1.8 V, IOUT = 0A, FPWM mode, Normal mode	-2		2	%
		V_{INB1} = 3.8 V, V_{BUCK1} = 1.8 V, IOUT = 10 mA, Low power mode	-4		4	%
$\Delta V_{OUT(\Delta VINB)}$	DC Line regulation	V_{INB1} = 3 V to 5 V, I_{OUT}= I_{OUT_MAX} [1]		2		mV/V
$\Delta V_{OUT(\Delta IOUT)}$	DC Load regulation	0 mA < I_{OUT} < I_{OUT_MAX}, V_{BUCK1} = 1.8 V [1]		3		mV/A
$\Delta V_{OUT(\Delta IOUT)}$	Transient Load Response	I_{OUT} changes 0 to I_{OUT_MAX} (1A/us slope), V_{BUCK1} = 1.8 V [1]		50		mV
ΔV_{OUT}	Output voltage Ripple	FPWM mode [1]		10		mV
f_{SW}	Switching Frequency in CCM	Switching frequency could change according to the ON time control technique described in Section 7.6.1		2		MHz
R_{DSON}	High Side P-FET R_{DSON}	V_{INB1} = 3.8 V		200		mΩ
	Low Side N-FET R_{DSON}	V_{INB1} = 3.8 V		90		mΩ
I_{LIM}	High side current limit	V_{INB1} = 3.8 V	2.2	2.4	2.6	A
	Low side current limit	V_{INB1} = 3.8 V	0.8	1	1.2	A
t_{START}	Startup time	EN rising to 90 % of output voltage [1]		500	700	µs
V_{RAMP}	Output voltage slew rate	Programmable, RAMP[1:0] = 01b [1]		12.5		mV/us
V_{soft_strup}	Soft-start slew rate	[1]		12.5		mV/us

All information provided in this document is subject to legal disclaimers.

© 2025 NXP B.V. All rights reserved.

Table 175. BUCK1 description...*continued*

Unless otherwise specified, VSYS = 3.8 V, V_{INB14} = V_{INB23} = 3.8 V, V_{INL} = 3.8 V, V_{INL1} = V_{BUCK4}, T_A= –40 °C ~ +85 °C

Symbol	Parameter	Conditions	Min	Typ	Max	Unit
R_{DIS}	Output Active Discharge Resistance			100	150	Ω
POK	Output Power good			85	95	%
t_{POK_Deb}	POK debounce time	POK falling		300		µs
L	Inductor value	[1]		0.47		µH
C_{OUT}	Output capacitance	Minimum nominal capacitance [1]	22			µF

[1] Not tested in production. Guaranteed by design

13.3 BUCK2

Table 176. BUCK2 description

Unless otherwise specified, VSYS = 3.8 V, V_{INB14} = V_{INB23} = 3.8 V, V_{INL} = 3.8 V, V_{INL1} = V_{BUCK4}, T_A= –40 °C ~ +85 °C

Symbol	Parameter	Conditions	Min	Typ	Max	Unit
V_{INB2}	Input voltage range	INB23 pin [1]	2.7		5.5	V
I_Q	Quiescent current	Low power mode, IOUT = 0A, 25 °C		1.3	2.5	µA
		Normal mode, IOUT = 0A [1]		5.2	11	µA
I_{OUT_MAX}	Max Output Current	Low power mode			100	mA
		Normal mode	1000			mA
V_{BUCK2_RANGE}	Programmable Output voltage range	I^2C programmable, 12.5 mV/step	0.6		2.1875	V
V_{BUCK2}	DC Output Voltage Accuracy	V_{INB2} = 3.8 V, V_{BUCK2} = 1.0 V, IOUT = 0A, FPWM mode, Normal mode	-2		2	%
		V_{INB2} = 3.8 V, V_{BUCK2} = 1.0 V, IOUT = 10 mA, Low power mode	-4		4	%
$\Delta V_{OUT(\Delta VINB)}$	DC Line regulation	V_{INB2} = 3 V to 5 V, I_{OUT}= I_{OUT_MAX} [1]		2		mV/V
$\Delta V_{OUT(\Delta IOUT)}$	DC Load regulation	0 mA < I_{OUT} < I_{OUT_MAX}, V_{BUCK2} = 1.0 V [1]		3		mV/A
$\Delta V_{OUT(\Delta IOUT)}$	Transient Load Response	I_{OUT} changes 0 to I_{OUT_MAX} (1A/us slope), V_{BUCK2} = 1.0 V [1]		50		mV
ΔV_{OUT}	Output voltage Ripple	FPWM mode [1]		10		mV
f_{SW}	Switching Frequency in CCM	Switching frequency could change according to the ON time control technique described in Section 7.6.1		2		MHz
R_{DSON}	High Side P-FET R_{DSON}	V_{INB2} = 3.8 V		200		mΩ
	Low Side N-FET R_{DSON}	V_{INB2} = 3.8 V		90		mΩ
I_{LIM}	High side current limit	V_{INB2} = 3.8 V	2.2	2.4	2.6	A
	Low side current limit	V_{INB2} = 3.8 V	0.8	1	1.2	A

All information provided in this document is subject to legal disclaimers.

© 2025 NXP B.V. All rights reserved.

Table 176. BUCK2 description...*continued*

Unless otherwise specified, VSYS = 3.8 V, V_{INB14} = V_{INB23} = 3.8 V, V_{INL} = 3.8 V, V_{INL1} = V_{BUCK4}, T_A= –40 °C ~ +85 °C

Symbol	Parameter	Conditions	Min	Typ	Max	Unit
t_{START}	Startup time	EN rising to 90 % of output voltage [1]		500	700	µs
V_{RAMP}	Output voltage slew rate	Programmable, RAMP[1:0] = 01b [1]		12.5		mV/us
V_{soft_strup}	Soft-start slew rate	[1]		12.5		mV/us
POK	Output Power good		75	85	95	%
t_{POK_Deb}	POK debounce time	POK falling		300		µs
R_{DIS}	Output Active Discharge Resistance			100	150	Ω
L	Inductor value	[1]		0.47		µH
C_{OUT}	Output capacitance	Minimum nominal capacitance [1]	20			µF

[1] Not tested in production. Guaranteed by design

13.4 BUCK3

Table 177. BUCK3 description

Unless otherwise specified, VSYS = 3.8 V, V_{INB14} = V_{INB23} = 3.8 V, V_{INL} = 3.8 V, V_{INL1} = V_{BUCK4}, T_A= –40 °C ~ +85 °C

Symbol	Parameter	Conditions	Min	Typ	Max	Unit
V_{INB3}	Input voltage range	INB23 pin [1]	2.7		5.5	V
I_Q	Quiescent current	Low power mode, IOUT = 0A, 25 °C		1.3	2.5	µA
		Normal mode, IOUT = 0A [1]		5.2	11	µA
I_{OUT_MAX}	Max output current	Low power mode			100	mA
		Normal mode	1000			mA
V_{BUCK3_RANGE}	Programmable output voltage range	I^2C programmable, 12.5 mV/step	0.6		2.1875	V
V_{BUCK3}	DC output voltage accuracy	V_{INB3} = 3.8 V, V_{BUCK3} = 1.0 V, IOUT = 0A, FPWM mode, normal mode				
		• -40 °C to 85 °C	-1.0		+3.0	%
		• 0 °C to 85 °C	-0.5		2.25	%
		V_{INB3} = 3.8 V, V_{BUCK3} = 1.0 V, IOUT = 10 mA, low power mode				
		• -40 °C to 85 °C	-3.0		+5.0	%
$\Delta V_{OUT(\Delta VINB)}$	DC line regulation	V_{INB3} = 3 V to 5 V, I_{OUT}= I_{OUT_MAX} [1]		2		mV/V
$\Delta V_{OUT(\Delta IOUT)}$	DC load regulation	0 mA < I_{OUT} < I_{OUT_MAX}, V_{BUCK3} = 1.0 V [1]		3		mV/A
$\Delta V_{OUT(\Delta IOUT)}$	Transient load response	I_{OUT} changes 0 to I_{OUT_MAX} (1A/us slope), V_{BUCK3} = 1.0 V [1]		50		mV

All information provided in this document is subject to legal disclaimers.

© 2025 NXP B.V. All rights reserved.

Table 177. BUCK3 description...*continued*

Unless otherwise specified, VSYS = 3.8 V, V_{INB14} = V_{INB23} = 3.8 V, V_{INL} = 3.8 V, V_{INL1} = V_{BUCK4}, T_A= –40 °C ~ +85 °C

Symbol	Parameter	Conditions	Min	Typ	Max	Unit
ΔV_{OUT}	Output voltage ripple	FPWM mode [1]		10		mV
f_{SW}	Switching frequency in CCM	Switching frequency could change according to the ON time control technique described in Section 7.6.1		2		MHz
R_{DSON}	High side P-FET R_{DSON}	V_{INB3} = 3.8 V		200		mΩ
	Low side N-FET R_{DSON}	V_{INB3} = 3.8 V		90		mΩ
I_{LIM}	High side current limit	V_{INB3} = 3.8 V	2.2	2.4	2.6	A
	Low side current limit	V_{INB3} = 3.8 V	0.8	1	1.2	A
t_{START}	Startup time	EN rising to 90 % of output voltage [1]		500	700	µs
V_{RAMP}	Output voltage slew rate	Programmable, RAMP[1:0] = 01b [1]		12.5		mV/us
V_{soft_strup}	Soft-start slew rate	[1]		12.5		mV/us
POK	Output power good		75	85	95	%
t_{POK_Deb}	POK debounce time	POK falling		300		µs
R_{DIS}	Output active discharge resistance			100	150	Ω
L	Inductor value	[1]		0.47		µH
C_{OUT}	Output capacitance	Minimum nominal capacitance [1]	20			µF

[1] Not tested in production. Guaranteed by design

13.5 BUCK4

Table 178. BUCK4 description

Unless otherwise specified, VSYS = 3.8 V, V_{INB14} = V_{INB23} = 3.8 V, V_{INL} = 3.8 V, V_{INL1} = V_{BUCK4}, T_A= –40 °C ~ +85 °C

Symbol	Parameter	Conditions	Min	Typ	Max	Unit
V_{INB4}	Input voltage range	INB14 pin [1]	2.7		5.5	V
I_Q	Quiescent current	Low power mode, IOUT = 0A, 25 °C		1.3	2.5	µA
		Normal mode, IOUT = 0A [1]		5.2	11	µA
I_{OUT_MAX}	Max output current	Low power mode			100	mA
		Normal mode	1000			mA
V_{BUCK4_RANGE}	Programmable output voltage range	I^2C programmable, 25 mV/step	0.6		3.4	V
V_{BUCK4}	DC output voltage accuracy	V_{INB4} = 3.8 V, V_{BUCK3} = 1.1V, IOUT = 0A, FPWM mode, Normal mode	-2		2	%
		V_{INB4} = 3.8 V, V_{BUCK3} = 1.1V, IOUT = 10 mA, Low power mode	-4		4	%

All information provided in this document is subject to legal disclaimers.

© 2025 NXP B.V. All rights reserved.

Table 178. BUCK4 description...*continued*

Unless otherwise specified, VSYS = 3.8 V, V_{INB14} = V_{INB23} = 3.8 V, V_{INL} = 3.8 V, V_{INL1} = V_{BUCK4}, T_A= –40 °C ~ +85 °C

Symbol	Parameter	Conditions	Min	Typ	Max	Unit
$\Delta V_{OUT(\Delta VINB)}$	DC Line regulation	V_{INB4} = 3 V to 5 V, I_{OUT}= I_{OUT_MAX} [1]		2		mV/V
$\Delta V_{OUT(\Delta IOUT)}$	DC Load regulation	0 mA < I_{OUT} < I_{OUT_MAX}, V_{BUCK4} = 1.8 V [1]		3		mV/A
$\Delta V_{OUT(\Delta IOUT)}$	Transient Load Response	I_{OUT} changes 0 to I_{OUT_MAX} (1A/ us slope), V_{BUCK4} = 1.1V [1]		50		mV
ΔV_{OUT}	Output voltage Ripple	FPWM mode [1]		10		mV
f_{SW}	Switching Frequency in CCM	Switching frequency could change according to the ON time control technique described in Section 7.6.1		2		MHz
R_{DSON}	High Side P-FET R_{DSON}	V_{INB4} = 3.8 V		200		mΩ
	Low Side N-FET R_{DSON}	V_{INB4} = 3.8 V		90		mΩ
I_{LIM}	High side current limit	V_{INB4} = 3.8 V	2.2	2.4	2.6	A
	Low side current limit	V_{INB4} = 3.8 V	0.8	1	1.2	A
t_{START}	Startup time	EN rising to 90 % of output voltage [1]		500	700	µs
V_{RAMP}	Output voltage slew rate	Programmable, RAMP[1:0] = 01b [1]		12.5		mV/us
V_{soft_strup}	Soft-start slew rate	[1]		12.5		mV/us
R_{DIS}	Output active discharge resistance			100	150	Ω
POK	Output power good			85	95	%
t_{POK_Deb}	POK debounce time	POK falling		300		µs
L	Inductor value	[1]		0.47		µH
C_{OUT}	Output capacitance	Minimum nominal capacitance [1]	20			µF

[1] Not tested in production. Guaranteed by design

13.6 LDO_SNVS

Table 179. LDO_SNVS description

Unless otherwise specified, VSYS = 3.8 V, V_{INB14} = V_{INB23} = 3.8 V, V_{INL} = 3.8 V, V_{INL1} = V_{BUCK4}, $V_{LDOSNVS}$ = 3.0 V, T_A= –40 °C ~ +85 °C

Symbol	Parameter	Conditions	Min	Typ	Max	Unit
V_{IN}	Input voltage range	VSYS pin [1]	2.7		5.5	V
I_Q	Quiescent current	Regulator enabled, No load		0.23	0.5	µA
I_{OUT_MAX}	Maximum output DC Current	$V_{LDOSNVS}$ = 3.3 V	10			mA
I_{LIMIT}	Short current Limit	Output shorted to GND	20			mA
V_{DO}	Dropout voltage	I_{OUT} = I_{OUT_MAX}, V_{SYS} = 3.2V, $V_{LDOSNVS}$ =3.3 V		25	50	mV

All information provided in this document is subject to legal disclaimers.

© 2025 NXP B.V. All rights reserved.

Table 179. LDO_SNVS description...*continued*

Unless otherwise specified, VSYS = 3.8 V, V_{INB14} = V_{INB23} = 3.8 V, V_{INL} = 3.8 V, V_{INL1} = V_{BUCK4}, $V_{LDOSNVS}$ = 3.0 V, T_A= –40 °C ~ +85 °C

Symbol	Parameter	Conditions	Min	Typ	Max	Unit
$V_{LDOSNVS}$	Nominal output voltage	I^2C Programmable, 100mV step	0.8		3.3	V
	Default voltage			3.0		V
	DC accuracy	$V_{LDOSNVS}$ = 3.0 V, I_{Load} = 5mA	-3		3	%
V_{NOISE}	Output noise	f = 10 Hz to 10 kHz, I_{OUT} = 10 % of I_{MAX}, $V_{LDOSNVS}$ = 3.0 V [1]		450		µV
$\Delta V_{OUT(\Delta VINL)}$	DC line regulation	$V_{LDOSNVS}$ +0.3 V < V_{SYS} < 5.5 V, I_{OUT} = 10 % of I_{OUT_MAX}		0.2		%/V
$\Delta V_{OUT(\Delta IOUT)}$	DC load regulation	V_{SYS} = $V_{LDOSNVS}$ +0.3 V to 5.5 V, 0 mA < I_{OUT} < I_{OUT_MAX}		0.25		%
$\Delta V_{OUT(\Delta VINL)}$	Transient line response	$V_{LDOSNVS}$ +0.3 V < V_{SYS} < 5.5 V, I_{OUT} = 10 % of I_{OUT_MAX} [1]		3		%/V
$\Delta V_{OUT(\Delta IOUT)}$	Transient load response	V_{SYS} = $V_{LDOSNVS}$ +0.3 V to 5.5 V, 1 mA < I_{OUT} < I_{OUT_MAX} , tr = 10 µs, $V_{LDOSNVS}$ = 3.3 V, T_A= 25 °C [1]	-1		1	%
PSRR	Power supply rejection ratio	f = 10 Hz to 10 kHz, I_{OUT} = 10 % of I_{OUT_MAX} [1]		36		dB
V_{soft_strup}	Soft-start slew rate	I_{OUT} = 0 mA, 10 % to 90 % of $V_{LDOSNVS}$ [1]		6.0		mV/µs
V_{ov_srtup}	Overshoot at startup	I_{OUT} = 0 mA [1]			10	mV
t_{EN}	Enable time	EN rising to 90 % of output voltage [1]		700	1500	µs
POK_90	Output power good	Percentage of $V_{LDOSNVS}$ configuration	86	90	94	%
t_{POK_Deb}	POK debounce time	POK falling		300		µs
R_{DIS}	Active discharge resistance		50	100	150	Ω
C_{OUT}	Output capacitance	Minimum nominal capacitance [1]	1			µF

[1] Not tested in production. Guaranteed by design

13.7 LDO1

Table 180. LDO1 description

Unless otherwise specified, VSYS = 3.8 V, V_{INB14} = V_{INB23} = 3.8 V, V_{INL} = 3.8 V, V_{INL1} = 1.1V (V_{BUCK4}), T_A= –40 °C ~ +85 °C

Symbol	Parameter	Conditions	Min	Typ	Max	Unit
V_{IN}	Input voltage range	INL1 pin, VSYS > V_{LDO1} + 1.5 V [1]	V_{LDO1} + V_{DO}		5.5	V
I_Q	Quiescent current	Regulator enabled, No load, Low power mode		0.35	0.6	µA
		Regulator enabled, No load, Normal power mode		0.5	0.8	µA

All information provided in this document is subject to legal disclaimers.

© 2025 NXP B.V. All rights reserved.

Table 180. LDO1 description...*continued*

Unless otherwise specified, VSYS = 3.8 V, V_{INB14} = V_{INB23} = 3.8 V, V_{INL} = 3.8 V, V_{INL1} = 1.1V (V_{BUCK4}), T_A= –40 °C ~ +85 °C

Symbol	Parameter	Conditions	Min	Typ	Max	Unit
I_{OUT_MAX}	Maximum output DC current	V_{INL1} > V_{LDO1} + 0.2 V, V_{LDO1} = 0.6 V	250			mA
I_{LIMIT}	Short current limit	Output shorted to GND	260			mA
V_{DO}	Dropout voltage	I_{OUT} = I_{OUT_MAX}, V_{INL1} = 1.8 V, L1_OUT = 2V, VSYS > V_{LDO1} + 1.5 V		100	175	mV
V_{LDO1}	Nominal output voltage	I^2C Programmable, 50 mV/step	0.6		1.95	V
	Default voltage			0.6		V
	DC accuracy	V_{LDO1} = 0.6 V, I_{Load} = 5 mA	-2		2	%
V_{NOISE}	Output noise	f = 10 Hz to 10 kHz, I_{OUT} = 10 % of I_{MAX}, V_{LDO1} = 0.6 V [1]		66		µV
$\Delta V_{OUT(\Delta VINL)}$	DC line regulation	V_{LDO1} +0.3 V < V_{INL1} < 5.5 V, I_{OUT} = 10 % of I_{OUT_MAX}		0.01		%/V
$\Delta V_{OUT(\Delta IOUT)}$	DC load regulation	V_{INL1} = V_{LDO1} +0.3 V to 5.5 V, 0.1 mA < I_{OUT} < I_{OUT_MAX}		0.15		%
$\Delta V_{OUT(\Delta VINL)}$	Transient line response	V_{LDO1} +0.3 V < V_{INL1} < 5.5 V, I_{OUT} = 10 % of I_{OUT_MAX}, tr = 10 µs [1]		3		%/V
$\Delta V_{OUT(\Delta IOUT)}$	Transient load response	V_{INL1} = V_{LDO1} +0.3 V to 5.5 V, 1 mA < I_{OUT} < I_{OUT_MAX} , tr = 10 µs, V_{LDO1} = 1.1 V [1]	-3		5	%
PSRR	Power supply rejection ratio	f = 10 Hz to 10 kHz, I_{OUT} = 10 % of I_{OUT_MAX} [1]		55		dB
V_{soft_strup}	Soft-start slew rate	I_{OUT} = 0 mA, 10 % to 90 % of V_{LDO1} [1]		10		mV/µs
V_{ov_srtup}	Overshoot at startup	I_{OUT} = 0 mA [1]			18	mV
t_{EN}	Enable time	EN rising to 90 % of output voltage at V_{LDO1} = 0.6 V [1]		200	250	µs
POK_90	Output power good	Delta from V_{LDO1} Target	87	90	93	%
t_{POK_Deb}	POK debounce time	POK falling		300		µs
R_{DIS}	Active discharge resistance			100	180	Ω
C_{OUT}	Output capacitance	Minimum nominal capacitance [1]	2.2		10	µF

[1] Not tested in production. Guaranteed by design

13.8 LDO2

Table 181. LDO2 description

Unless otherwise specified, VSYS = 3.8 V, V_{INB14} = V_{INB23} = 3.8 V, V_{INL} = 3.8 V, V_{INL1} = V_{BUCK4}, T_A= –40 °C ~ +85 °C

Symbol	Parameter	Conditions	Min	Typ	Max	Unit
V_{IN}	Input voltage range	INL pin [1]	2.7		5.5	V
I_Q	Quiescent current	Regulator enabled, No load		0.23	0.5	µA

All information provided in this document is subject to legal disclaimers.

© 2025 NXP B.V. All rights reserved.

Table 181. LDO2 description...*continued*

Unless otherwise specified, VSYS = 3.8 V, V_{INB14} = V_{INB23} = 3.8 V, V_{INL} = 3.8 V, V_{INL1} = V_{BUCK4}, T_A= –40 °C ~ +85 °C

Symbol	Parameter	Conditions	Min	Typ	Max	Unit
I_{OUT_MAX}	Maximum output DC current	V_{LDO2} = 3.3 V	250			mA
I_{LIMIT}	Short current limit	Output shorted to GND	260	310		mA
V_{DO}	Dropout voltage	I_{OUT} = I_{OUT_MAX}, V_{INL} = 3.2 V, L2_OUT = 3.3 V		60	100	mV
V_{LDO2}	Nominal output voltage	I^2C Programmable, 50 mV/step	0.8		3.3	V
	Default voltage	VSEL = L		3.3		V
	Default voltage	VSEL = H		1.8		V
	DC accuracy	V_{LDO2} = 3.3 V, I_{Load} = 5 mA	-2		2	%
V_{NOISE}	Output noise	f = 10 Hz to 10 kHz, I_{OUT} = 10 % of I_{MAX}, V_{LDO2} = 1.8 V [1]		150		µV
$\Delta V_{OUT(\Delta VINL)}$	DC line regulation	V_{LDO2} +0.3 V < V_{INL} < 5.5 V, I_{OUT} = 10 % of I_{OUT_MAX}		0.15		%/V
$\Delta V_{OUT(\Delta IOUT)}$	DC load regulation	V_{INL} = V_{LDO2} +0.3 V to 5.5 V, 0.1 mA < I_{OUT} < I_{OUT_MAX}		0.15		%
$\Delta V_{OUT(\Delta VINL)}$	Transient line response	V_{LDO2} +0.3 V < V_{INL} < 5.5 V, I_{OUT} = 10 % of I_{OUT_MAX}, tr = 10 µs [1]		3		%/V
$\Delta V_{OUT(\Delta IOUT)}$	Transient load response	V_{INL} = V_{LDO2} +0.3 V to 5.5 V, 1 mA < I_{OUT} < I_{OUT_MAX} , tr = 10 µs, V_{LDO2} = 3.3 V [1]	-3		3	%
PSRR	Power supply rejection ratio	f = 10 Hz to 10 kHz, I_{OUT} = 10 % of I_{OUT_MAX} [1]		40		dB
V_{soft_strup}	Soft-start slew rate	I_{OUT} = 0 mA, 10 % to 90 % of V_{LDO2} [1]		6.0		mV/µs
V_{ov_srtup}	Overshoot at startup	I_{OUT} = 0 mA [1]			20	mV
t_{EN}	Enable time	EN rising to 90 % of output voltage, V_{LDO2} = 3.3 V [1]		800	1800	µs
POK_90	Output power good	Percentage of V_{LDO2} configuration	86	90	94	%
t_{POK_Deb}	POK debounce time	POK falling		300		µs
R_{DIS}	Active discharge resistance			100	200	Ω
C_{OUT}	Output capacitance	Minimum nominal capacitance [1]	2.2		10	µF

[1] Not tested in production. Guaranteed by design

13.9 LDO3

Table 182. LDO3 description

Unless otherwise specified, VSYS = 3.8 V, V_{INB14} = V_{INB23} = 3.8 V, V_{INL} = 3.8 V, V_{INL1} = V_{BUCK4}, T_A= –40 °C ~ +85 °C

Symbol	Parameter	Conditions	Min	Typ	Max	Unit
V_{IN}	Input voltage range	INL pin [1]	2.7		5.5	V
I_Q	Quiescent current	Regulator enabled, No load		0.23	0.5	µA

All information provided in this document is subject to legal disclaimers.

© 2025 NXP B.V. All rights reserved.

Table 182. LDO3 description...*continued*

Unless otherwise specified, VSYS = 3.8 V, V_{INB14} = V_{INB23} = 3.8 V, V_{INL} = 3.8 V, V_{INL1} = V_{BUCK4}, T_A= –40 °C ~ +85 °C

Symbol	Parameter	Conditions	Min	Typ	Max	Unit
I_{OUT_MAX}	Maximum output DC current	V_{LDO3} = 3.3 V	250			mA
I_{LIMIT}	Short current limit	Output shorted to GND	260	310		mA
V_{DO}	Dropout voltage	I_{OUT} = I_{OUT_MAX}, V_{INL} = 3.2 V, L3_OUT = 3.3 V		60	100	mV
V_{LDO3}	Nominal output voltage	I^2C Programmable, 50mV/step	0.8		3.3	V
	Default voltage			3.3		V
	DC accuracy	V_{LDO3} = 3.3 V, I_{Load} = 5 mA	-2		2	%
V_{NOISE}	Output noise	f = 10 Hz to 10 kHz, I_{OUT} = 10 % of I_{MAX}, V_{LDO3} = 3.3 V [1]		170		µV
$\Delta V_{OUT(\Delta VINL)}$	DC line regulation	V_{LDO3} +0.3 V < V_{INL} < 5.5 V, I_{OUT} = 10 % of I_{OUT_MAX}		0.15		%/V
$\Delta V_{OUT(\Delta IOUT)}$	DC load regulation	V_{INL} = V_{LDO3} +0.3 V to 5.5 V, 0.1 mA < I_{OUT} < I_{OUT_MAX}		0.15		%
$\Delta V_{OUT(\Delta VINL)}$	Transient line response	V_{LDO3} +0.3 V < V_{INL} < 5.5 V, I_{OUT} = 10 % of I_{OUT_MAX}, tr = 10 µs [1]		3		%/V
$\Delta V_{OUT(\Delta IOUT)}$	Transient load response	V_{INL} = V_{LDO3} +0.3 V to 5.5 V, 1 mA < I_{OUT} < I_{OUT_MAX} , tr = 10 µs, V_{LDO3} = 3.3 V [1]	-3		3	%
PSRR	Power supply rejection ratio	f = 10 Hz to 10 kHz, I_{OUT} = 10 % of I_{OUT_MAX} [1]		40		dB
V_{soft_strup}	Soft-start slew rate	I_{OUT} = 0 mA, 10 % to 90 % of V_{LDO3} [1]		6.0		mV/µs
V_{ov_srtup}	Overshoot at startup	I_{OUT} = 0 mA [1]			20	mV
t_{EN}	Enable time	EN rising to 90 % of output voltage, V_{LDO3} = 3.3 V [1]		800	1800	µs
POK_90	Output power good	Percentage of V_{LDO3} configuration	86	90	94	%
t_{POK_Deb}	POK debounce time	POK falling		300		µs
R_{DIS}	Active discharge resistance			100	200	Ω
C_{OUT}	Output capacitance	Minimum nominal capacitance [1]	2.2		10	µF

[1] Not tested in production. Guaranteed by design

13.10 LDO4

Table 183. LDO4 description

Unless otherwise specified, VSYS = 3.8 V, V_{INB14} = V_{INB23} = 3.8 V, V_{INL} = 3.8 V, V_{INL1} = V_{BUCK4}, T_A= –40 °C ~ +85 °C

Symbol	Parameter	Conditions	Min	Typ	Max	Unit
V_{IN}	Input voltage range	INL pin [1]	2.7		5.5	V
I_Q	Quiescent current	Regulator enabled, No load		0.23	0.5	µA
I_{OUT_MAX}	Maximum output DC current	V_{LDO4} = 1.8 V	250			mA

All information provided in this document is subject to legal disclaimers.

© 2025 NXP B.V. All rights reserved.

Table 183. LDO4 description...*continued*

Unless otherwise specified, VSYS = 3.8 V, V_{INB14} = V_{INB23} = 3.8 V, V_{INL} = 3.8 V, V_{INL1} = V_{BUCK4}, T_A= –40 °C ~ +85 °C

Symbol	Parameter	Conditions	Min	Typ	Max	Unit
I_{LIMIT}	Short current limit	Output shorted to GND	260			mA
V_{DO}	Dropout voltage	I_{OUT} = I_{OUT_MAX}, V_{INL} = 3.2 V, L4_OUT = 3.3 V		60	100	mV
V_{LDO4}	Nominal output voltage	I^2C Programmable, 50 mV/step	0.8		3.3	V
	Default voltage			1.8		V
	DC accuracy	V_{LDO4} = 1.8 V, I_{Load} = 5 mA	-2		2	%
V_{NOISE}	Output noise	f = 10 Hz to 10 kHz, I_{OUT} = 10 % of I_{MAX}, V_{LDO4} = 1.8 V [1]		150		µV
$\Delta V_{OUT(\Delta VINL)}$	DC line regulation	V_{LDO4} +0.3 V < V_{INL} < 5.5 V, I_{OUT} = 10 % of I_{OUT_MAX}		0.15		%/V
$\Delta V_{OUT(\Delta IOUT)}$	DC load regulation	V_{INL} = V_{LDO4} +0.3 V to 5.5 V, 0.1 mA < I_{OUT} < I_{OUT_MAX}		0.15		%
$\Delta V_{OUT(\Delta VINL)}$	Transient Line Response	V_{LDO4} +0.3 V < V_{INL} < 5.5 V, I_{OUT} = 10 % of I_{OUT_MAX}, tr = 10 µs [1]		3		%/V
$\Delta V_{OUT(\Delta IOUT)}$	Transient load response	V_{INL} = V_{LDO4} +0.3 V to 5.5 V, 1 mA < I_{OUT} < I_{OUT_MAX} , tr = 10 µs, V_{LDO4} = 1.8 V [1]	-3		3	%
PSRR	Power supply rejection ratio	f = 10 Hz to 10 kHz, I_{OUT} = 10 % of I_{OUT_MAX} [1]		40		dB
V_{soft_strup}	Soft-start slew rate	I_{OUT} = 0 mA, 10 % to 90 % of V_{LDO4} [1]		6.0		mV/µs
V_{ov_srtup}	Overshoot at startup	I_{OUT} = 0 mA [1]			20	mV
t_{EN}	Enable time	EN rising to 90 % of output voltage, V_{LDO4} = 1.8 V [1]		300	500	µs
POK_90	Output power good	Percentage of V_{LDO4} configuration	86	90	94	%
t_{POK_Deb}	POK debounce time	POK falling		300		µs
R_{DIS}	Active discharge resistance			100	200	Ω
C_{OUT}	Output capacitance	Minimum nominal capacitance [1]	2.2		10	µF

[1] Not tested in production. Guaranteed by design

13.11 LSW1

Table 184. LSW1 description

Unless otherwise specified, VSYS = 3.8 V, V_{INB14} = V_{INB23} = 3.8 V, V_{INL} = 3.8 V, V_{INL1} = V_{BUCK4}, V_{LSW1IN} = $V_{LSWW4IN}$ = 3.3 V, T_A= –40 °C ~ +85 °C

Symbol	Parameter	Conditions	Min	Typ	Max	Unit
V_{LSW1IN}	Input voltage range	LSW1IN pin [1]	1.2[2]		5.5	V
I_Q	Quiescent current	Switch enabled, No load, V_{LSW1IN} = 1.8 V		0.5	50	nA
I_{SHDN}	Shutdown current	V_{LSW1IN} = 3.3 V		5	700	nA

All information provided in this document is subject to legal disclaimers.

© 2025 NXP B.V. All rights reserved.

Table 184. LSW1 description...*continued*

Unless otherwise specified, VSYS = 3.8 V, V_{INB14} = V_{INB23} = 3.8 V, V_{INL} = 3.8 V, V_{INL1} = V_{BUCK4}, V_{LSW1IN} = $V_{LSWW4IN}$ = 3.3 V, T_A= –40 °C ~ +85 °C

Symbol	Parameter	Conditions	Min	Typ	Max	Unit
R_{DSON}	Switch ON resistance	V_{LSW1IN} = 1.8 V, I_{LOAD} = 150 mA		150	220	mΩ
t_{EN}	Enable time	Time to LSW1OUT 10 % from EN, V_{LSW1IN} = 1.8 V [1]		70	110	µs
t_{RAMP}	Output rise time	CL = 10 µF, V_{SWIN} = 1.8 V, LSW1OUT 10 % to 90 % [1]	6	12	18	mV/us
R_{DIS}	Active discharge resistance	Load switch is off		95	150	Ω

[1] Not tested in production. Guaranteed by design
[2] LSW can operate at 1.1V with a maximum ILOAD of 20mA (LS voltage drop = 10mV)

13.12 LSW2

Table 185. LSW2 description

Unless otherwise specified, VSYS = 3.8 V, V_{INB14} = V_{INB23} = 3.8 V, V_{INL} = 3.8 V, V_{INL1} = V_{BUCK4}, V_{LSW1IN} = $V_{LSWW4IN}$ = 3.3 V, T_A= –40 °C ~ +85 °C

Symbol	Parameter	Conditions	Min	Typ	Max	Unit
V_{LSW1IN}	Input voltage range	VLSW1IN pin [1]	1.2[2]		5.5	V
I_Q	Quiescent current	Switch enabled, No load, V_{LSW1IN} = 1.8 V		0.5	50	nA
I_{SHDN}	Shutdown current	V_{LSW1IN} = 3.3 V		5	700	nA
R_{DSON}	Switch ON resistance	V_{LSW1IN} = 1.8 V, I_{LOAD} = 150 mA		150	220	mΩ
t_{EN}	Enable time	Time to LSW2OUT 10 % from EN, V_{LSW1IN} = 1.8 V [1]		70	110	µs
t_{RAMP}	Output rise time	CL = 10 µF, V_{SWIN} = 1.8 V, LSW2OUT 10 % to 90 % [1]	6	12	18	mV/us
R_{DIS}	Active discharge resistance	Load switch is off		95	150	Ω

[1] Not tested in production. Guaranteed by design
[2] LSW can operate at 1.1V with a maximum ILOAD of 20mA (LS voltage drop = 10mV)

13.13 LSW3

Table 186. LSW3 description

Unless otherwise specified, VSYS = 3.8 V, V_{INB14} = V_{INB23} = 3.8 V, V_{INL} = 3.8 V, V_{INL1} = V_{BUCK4}, V_{LSW1IN} = $V_{LSWW4IN}$ = 3.3 V, T_A= –40 °C ~ +85 °C

Symbol	Parameter	Conditions	Min	Typ	Max	Unit
V_{LSW1IN}	Input voltage range	VLSW1IN pin [1]	1.2[2]		5.5	V
I_Q	Quiescent current	Switch enabled, No load, V_{LSW1IN} = 1.8 V		0.5	50	nA
I_{SHDN}	Shutdown current	V_{LSW1IN} = 3.3 V		5	700	nA
R_{DSON}	Switch ON resistance	V_{LSW1IN} = 1.8 V, I_{LOAD} = 150 mA		150	220	mΩ
t_{EN}	Enable time	Time to LSW3OUT 10 % from EN, V_{LSW1IN} = 1.8 V [1]		70	110	µs

All information provided in this document is subject to legal disclaimers.

© 2025 NXP B.V. All rights reserved.

Table 186. LSW3 description...*continued*

Unless otherwise specified, VSYS = 3.8 V, V_{INB14} = V_{INB23} = 3.8 V, V_{INL} = 3.8 V, V_{INL1} = V_{BUCK4}, V_{LSW1IN} = $V_{LSWW4IN}$ = 3.3 V, T_A= –40 °C ~ +85 °C

Symbol	Parameter	Conditions	Min	Typ	Max	Unit
t_{RAMP}	Output rise time	CL = 10 µF, V_{SWIN} = 1.8 V, LSW3OUT 10 % to 90 % [1]	6	12	18	mV/us
R_{DIS}	Active Discharge Resistance	Load switch is off		95	150	Ω

[1] Not tested in production. Guaranteed by design
[2] LSW can operate at 1.1V with a maximum ILOAD of 20mA (LS voltage drop = 10mV)

13.14 LSW4

Table 187. LSW4 description

Unless otherwise specified, VSYS = 3.8 V, V_{INB14} = V_{INB23} = 3.8 V, V_{INL} = 3.8 V, V_{INL1} = V_{BUCK4}, V_{LSW1IN} = $V_{LSWW4IN}$ = 3.3 V, T_A= –40 °C ~ +85 °C

Symbol	Parameter	Conditions	Min	Typ	Max	Unit
V_{LSW4IN}	Input voltage range	LSW4IN pin [1]	1.2[2]		5.5	V
I_Q	Quiescent current	Switch enabled, No load, V_{LSW4IN} = 1.8 V		0.5	50	nA
I_{SHDN}	Shutdown current	V_{LSW4IN} = 3.3 V		5	700	nA
R_{DSON}	Switch ON resistance	V_{LSW4IN} = 1.8 V, I_{LOAD} = 150 mA		150	220	mΩ
t_{EN}	Enable time	Time to LSW4OUT 10 % from EN, V_{LSWxIN} = 1.8 V [1]		70	110	µs
t_{RAMP}	Output rise time	CL = 10 µF, V_{LSW4IN} = 1.8 V, LSW4OUT 10 % to 90 % [1]	6	12	18	mV/us
R_{DIS}	Active discharge resistance	Load switch is off		95	150	Ω

[1] Not tested in production. Guaranteed by design
[2] LSW can operate at 1.1V with a maximum ILOAD of 20mA (LS voltage drop = 10mV)

13.15 LED driver (LED1/LED2/LED3/LED4)

Table 188. LED driver (LED1/LED2/LED3/LED4) description

Unless otherwise specified, VSYS = 3.8 V, V_{INB14} = V_{INB23} = 3.8 V, V_{INL} = 3.8 V, V_{INL1} = V_{BUCK4}, V_{LSW1IN} = $V_{LSWW4IN}$ = 3.3 V, T_A= –40 °C ~ +85 °C

Symbol	Parameter	Conditions	Min	Typ	Max	Unit
V_{LEDIN}	Input voltage range	LSW1IN, LSW4IN pin [1]	3.0		5.5	V
I_Q	Quiescent current	V_{LSW1IN} = V_{LSW4IN} = 3.3 V, All LED channels are enabled, load = 0 mA		80	100	µA
I_{LED}	LED current range	Current programmable range	0.625		20	mA
I_{LED_STEP}	LED current step			0.625		mA
V_{HR}	Headroom voltage	V_{LEDIN} – V_{LEDx}		168	200	mV
I_{LED_ACC}	Current accuracy	I_{LEDx} = 10 mA, T_A = 25 °C	–1.5	0	1.5	%
		I_{LEDx} = 10 mA, T_A = -40 ~ 85 °C	-4	0	4	%

All information provided in this document is subject to legal disclaimers.

© 2025 NXP B.V. All rights reserved.

Table 188. LED driver (LED1/LED2/LED3/LED4) description...*continued*

Unless otherwise specified, VSYS = 3.8 V, V_{INB14} = V_{INB23} = 3.8 V, V_{INL} = 3.8 V, V_{INL1} = V_{BUCK4}, V_{LSW1IN} = $V_{LSWW4IN}$ = 3.3 V, T_A= –40 °C ~ +85 °C

Symbol	Parameter	Conditions	Min	Typ	Max	Unit
I_{LED_MIS}	Current mismatch	I_{LEDx} = 10 mA	-3	0	3	%
t_{ON}	LED ON time	BLINK Mode, LED_TON = 0x1	180	200	220	ms
t_{OFF}	LED OFF time	BLINK Mode, LED_TOFF = 0x1	180	200	220	ms
t_{RU}	LED Ramp Up time	BLINK Mode, P1_UP_STEP = 0x0, P1_UP_DLY = 0x0	470	523	575	ms
t_{RD}	LED Ramp Down time	BLINK Mode, P1_DN_STEP = 0x0, P1_DN_DLY = 0x0	470	523	575	ms

[1] Not tested in production. Guaranteed by design

13.16 I²C interface and logic I/O

Table 189. I²C interface and logic I/O description

Unless otherwise specified, VSYS = 3.8 V, V_{INB14} = V_{INB23} = 3.8 V, V_{INL} = 3.8 V, V_{INL1} = V_{BUCK4}, V_{LSW1IN} = $V_{LSWW4IN}$ = 3.3 V, T_A= –40 °C ~ +85 °C

Symbol	Parameter	Conditions	Min	Typ	Max	Unit
SCL, SDA						
f_{I^2C}	I²C Clock frequency		—	—	1	MHz
V_{IH}	High-level Input voltage	SCL, SDA; VSYS= 3.0 V to 5.5 V	1.2	—	—	V
V_{IL}	Low-level Input voltage	SCL, SDA; VSYS= 3.0 V to 5.5 V	—	—	0.4	V
V_{hys}	Hysteresis of Schmitt trigger inputs		0.01	—	—	V
V_{OL}	Low-level output voltage	SDA, Iload = 20 mA, VSYS = 3.0 V to 5.5 V	0	—	0.4	V
$t_{HD,STA}$	Hold time (repeated) START condition	Fast mode plus; After this period, the first clock pulse is generated [1]	0.26	—	—	µs
t_{LOW}	LOW period of I²C clock	Fast mode plus [1]	0.5	—	—	µs
t_{HIGH}	HIGH period of I²C clock	Fast mode plus [1]	0.26	—	—	µs
$t_{SU,STA}$	Setup time (repeated) START condition	Fast mode plus [1]	0.26	—	—	µs
$t_{HD,DAT}$	Data Hold time	Fast mode plus [1]	0	—	—	µs
$t_{SU,DAT}$	Data Setup time	Fast mode plus [1]	50	—	—	ns
t_r	Rise time of I2C_SCL and I2C_SDA signals	Fast mode plus [1]	—	—	120	ns
t_f	Fall time of I2C_SCL and I2C_SDA signals	Fast mode plus [1]	—	—	120	ns
$t_{SU,STO}$	Setup time for STOP condition	Fast mode plus [1]	0.26	—	—	µs
t_{BUF}	Bus free time between STOP and START condition	Fast mode plus [1]	0.5	—	—	µs
$t_{VD,DAT}$	Data valid time	Fast mode plus [1]		—	0.45	µs

All information provided in this document is subject to legal disclaimers.

© 2025 NXP B.V. All rights reserved.

Table 189. I²C interface and logic I/O description*...continued*

Unless otherwise specified, VSYS = 3.8 V, V_{INB14} = V_{INB23} = 3.8 V, V_{INL} = 3.8 V, V_{INL1} = V_{BUCK4}, V_{LSW1IN} = $V_{LSWW4IN}$ = 3.3 V, T_A= –40 °C ~ +85 °C

Symbol	Parameter	Conditions	Min	Typ	Max	Unit
$t_{VD,ACK}$	Data valid acknowledge time	Fast mode plus [1]		—	0.45	µs
t_{SP}	Pulse width of spikes that must be suppressed by input filter	[1]	0	—	50	ns

[1] Not tested in production. Guaranteed by design

All information provided in this document is subject to legal disclaimers.

© 2025 NXP B.V. All rights reserved.

14 Package outline

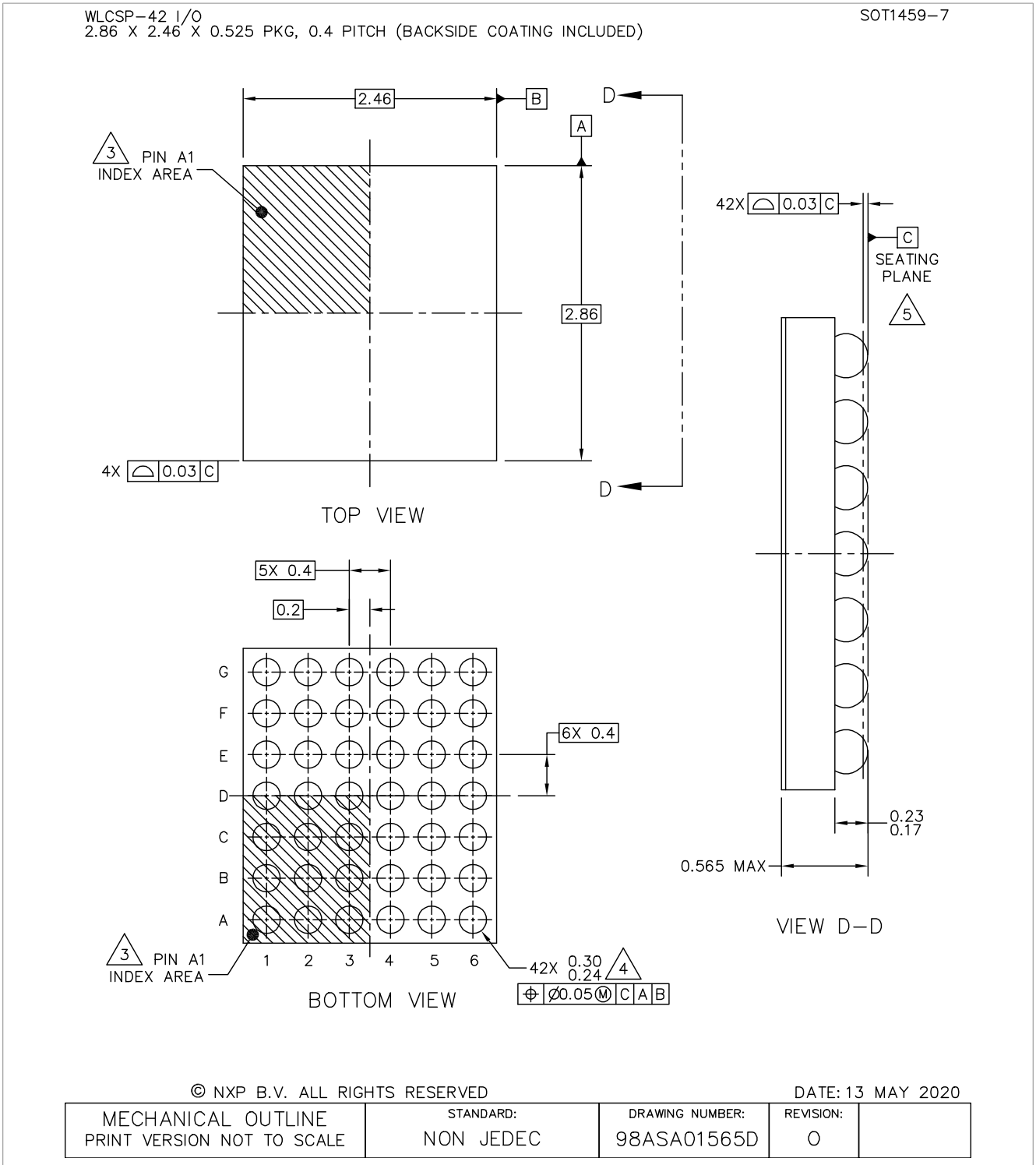

Figure 26. Package outline WLCSP-42

© 2025 NXP B.V. All rights reserved.

WLCSP–42 I/O
2.86 X 2.46 X 0.525 PKG, 0.4 PITCH (BACKSIDE COATING INCLUDED)

SOT1459–7

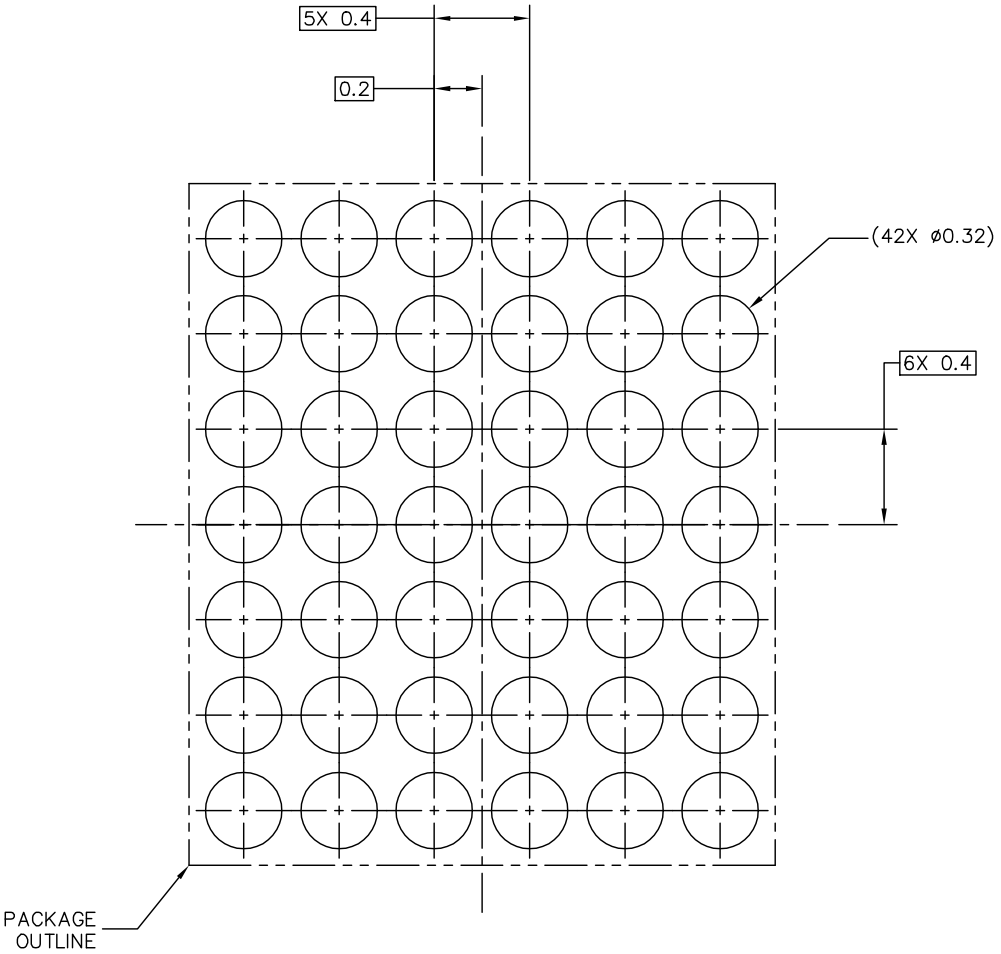

PCB DESIGN GUIDELINES – SOLDER MASK OPENING PATTERN

THIS SHEET SERVES ONLY AS A GUIDELINE TO HELP DEVELOP A USER SPECIFIC SOLUTION. DEVELOPMENT EFFORT WILL STILL BE REQUIRED BY END USERS TO OPTIMIZE PCB MOUNTING PROCESSES AND BOARD DESIGN IN ORDER TO MEET INDIVIDUAL/SPECIFIC REQUIREMENTS.

© NXP B.V. ALL RIGHTS RESERVED

DATE: 13 MAY 2020

MECHANICAL OUTLINE PRINT VERSION NOT TO SCALE	STANDARD: NON JEDEC	DRAWING NUMBER: 98ASA01565D	REVISION: O	

Figure 27. PCB Design Guidelines – Solder Mask Opening Pattern

WLCSP–42 I/O
2.86 X 2.46 X 0.525 PKG, 0.4 PITCH (BACKSIDE COATING INCLUDED)

SOT1459–7

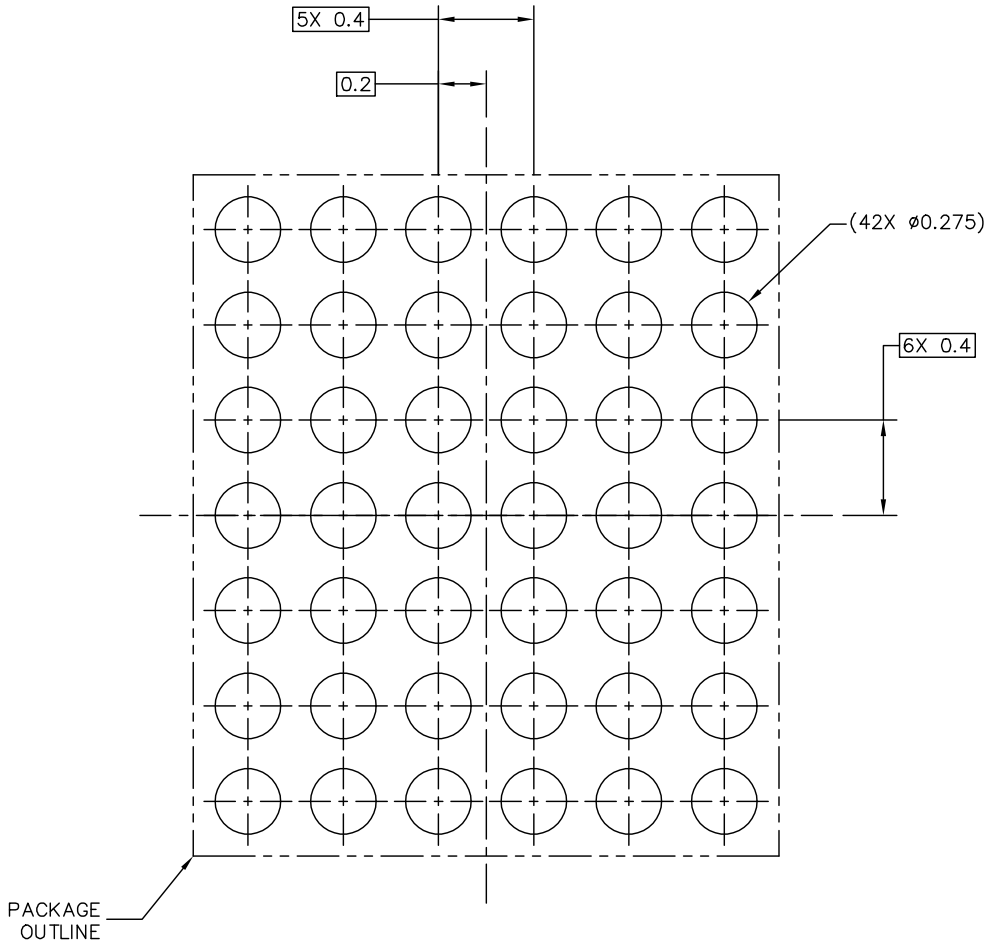

RECOMMENDED STENCIL THICKNESS 0.1

PCB DESIGN GUIDELINES – SOLDER PASTE STENCIL

THIS SHEET SERVES ONLY AS A GUIDELINE TO HELP DEVELOP A USER SPECIFIC SOLUTION. DEVELOPMENT EFFORT WILL STILL BE REQUIRED BY END USERS TO OPTIMIZE PCB MOUNTING PROCESSES AND BOARD DESIGN IN ORDER TO MEET INDIVIDUAL/SPECIFIC REQUIREMENTS.

© NXP B.V. ALL RIGHTS RESERVED

DATE: 13 MAY 2020

MECHANICAL OUTLINE PRINT VERSION NOT TO SCALE	STANDARD: NON JEDEC	DRAWING NUMBER: 98ASA01565D	REVISION: O	

Figure 28. PCB Design Guidelines – Solder Paste Stencil

15 Revision history

Table 190. Revision history

Document ID	Release date	Description
PCA9460 v.3.6	14 October 2025	• Updated per CIN# 202507030I – Added new orderable parts PCA9460AAUK, PCA9460BAUK, PCA9460CAUK – Updated Device_ID reset value – Table 175: Updated output voltage accuracy in LPM for BUCK1 from ± 3% to ±4%. – Table 176: Updated output voltage accuracy in LPM for BUCK2 from ± 3% to ±4%. – Table 177: Updated output voltage accuracy in LPM for BUCK3 from -2%, +4% to -3%, +5%. – Table 178: Updated output voltage accuracy in LPM for BUCK4 from ± 3% to ±4%.
PCA9460 v.3.5	2 December 2024	• Updated per CIN# 202411017I – Section 7.6.1: Updated second paragraph – Table 172: $V_{range(gnd)}$ INL1 moved to separate row; added table note for VSYS – Table 175, Table 176, Table 177, and Table 178: Added conditions to f_{SW} – Table 184, Table 185, Table 186, and Table 187: Added table note to V_{LSWxIN} min
PCA9460 v.3.4	10 January 2024	• Table 171: Updated format of table; no change to min/max values • Table 172: Added characteristics for T_{stg}; updated format of table; no change to min/max values
PCA9460 v.3.3	6 October 2023	• Product data sheet
PCA9460 v.3.2	1 September 2023	• Product data sheet
PCA9460 v.3.1	17 February 2023	• Product data sheet
PCA9460 v. 3.0	28 November 2022	• Product data sheet
PCA9460 v. 2.0	9 March 2022	• Product data sheet
PCA9460 v.1.0	4 August 2021	• Preliminary data sheet

All information provided in this document is subject to legal disclaimers.

© 2025 NXP B.V. All rights reserved.

Legal information

Data sheet status

Document status[1][2]	Product status[3]	Definition
Objective [short] data sheet	Development	This document contains data from the objective specification for product development.
Preliminary [short] data sheet	Qualification	This document contains data from the preliminary specification.
Product [short] data sheet	Production	This document contains the product specification.

[1] Please consult the most recently issued document before initiating or completing a design.
[2] The term 'short data sheet' is explained in section "Definitions".
[3] The product status of device(s) described in this document may have changed since this document was published and may differ in case of multiple devices. The latest product status information is available on the Internet at URL https://www.nxp.com.

Definitions

Draft — A draft status on a document indicates that the content is still under internal review and subject to formal approval, which may result in modifications or additions. NXP Semiconductors does not give any representations or warranties as to the accuracy or completeness of information included in a draft version of a document and shall have no liability for the consequences of use of such information.

Short data sheet — A short data sheet is an extract from a full data sheet with the same product type number(s) and title. A short data sheet is intended for quick reference only and should not be relied upon to contain detailed and full information. For detailed and full information see the relevant full data sheet, which is available on request via the local NXP Semiconductors sales office. In case of any inconsistency or conflict with the short data sheet, the full data sheet shall prevail.

Product specification — The information and data provided in a Product data sheet shall define the specification of the product as agreed between NXP Semiconductors and its customer, unless NXP Semiconductors and customer have explicitly agreed otherwise in writing. In no event however, shall an agreement be valid in which the NXP Semiconductors product is deemed to offer functions and qualities beyond those described in the Product data sheet.

Disclaimers

Limited warranty and liability — Information in this document is believed to be accurate and reliable. However, NXP Semiconductors does not give any representations or warranties, expressed or implied, as to the accuracy or completeness of such information and shall have no liability for the consequences of use of such information. NXP Semiconductors takes no responsibility for the content in this document if provided by an information source outside of NXP Semiconductors.

In no event shall NXP Semiconductors be liable for any indirect, incidental, punitive, special or consequential damages (including - without limitation - lost profits, lost savings, business interruption, costs related to the removal or replacement of any products or rework charges) whether or not such damages are based on tort (including negligence), warranty, breach of contract or any other legal theory.

Notwithstanding any damages that customer might incur for any reason whatsoever, NXP Semiconductors' aggregate and cumulative liability towards customer for the products described herein shall be limited in accordance with the Terms and conditions of commercial sale of NXP Semiconductors.

Right to make changes — NXP Semiconductors reserves the right to make changes to information published in this document, including without limitation specifications and product descriptions, at any time and without notice. This document supersedes and replaces all information supplied prior to the publication hereof.

Suitability for use — NXP Semiconductors products are not designed, authorized or warranted to be suitable for use in life support, life-critical or safety-critical systems or equipment, nor in applications where failure or malfunction of an NXP Semiconductors product can reasonably be expected to result in personal injury, death or severe property or environmental damage. NXP Semiconductors and its suppliers accept no liability for inclusion and/or use of NXP Semiconductors products in such equipment or applications and therefore such inclusion and/or use is at the customer's own risk.

Applications — Applications that are described herein for any of these products are for illustrative purposes only. NXP Semiconductors makes no representation or warranty that such applications will be suitable for the specified use without further testing or modification.

Customers are responsible for the design and operation of their applications and products using NXP Semiconductors products, and NXP Semiconductors accepts no liability for any assistance with applications or customer product design. It is customer's sole responsibility to determine whether the NXP Semiconductors product is suitable and fit for the customer's applications and products planned, as well as for the planned application and use of customer's third party customer(s). Customers should provide appropriate design and operating safeguards to minimize the risks associated with their applications and products.

NXP Semiconductors does not accept any liability related to any default, damage, costs or problem which is based on any weakness or default in the customer's applications or products, or the application or use by customer's third party customer(s). Customer is responsible for doing all necessary testing for the customer's applications and products using NXP Semiconductors products in order to avoid a default of the applications and the products or of the application or use by customer's third party customer(s). NXP does not accept any liability in this respect.

Limiting values — Stress above one or more limiting values (as defined in the Absolute Maximum Ratings System of IEC 60134) will cause permanent damage to the device. Limiting values are stress ratings only and (proper) operation of the device at these or any other conditions above those given in the Recommended operating conditions section (if present) or the Characteristics sections of this document is not warranted. Constant or repeated exposure to limiting values will permanently and irreversibly affect the quality and reliability of the device.

Terms and conditions of commercial sale — NXP Semiconductors products are sold subject to the general terms and conditions of commercial sale, as published at https://www.nxp.com/profile/terms, unless otherwise agreed in a valid written individual agreement. In case an individual agreement is concluded only the terms and conditions of the respective agreement shall apply. NXP Semiconductors hereby expressly objects to applying the customer's general terms and conditions with regard to the purchase of NXP Semiconductors products by customer.

No offer to sell or license — Nothing in this document may be interpreted or construed as an offer to sell products that is open for acceptance or the grant, conveyance or implication of any license under any copyrights, patents or other industrial or intellectual property rights.

© 2025 NXP B.V. All rights reserved.

Quick reference data — The Quick reference data is an extract of the product data given in the Limiting values and Characteristics sections of this document, and as such is not complete, exhaustive or legally binding.

Export control — This document as well as the item(s) described herein may be subject to export control regulations. Export might require a prior authorization from competent authorities.

Suitability for use in non-automotive qualified products — Unless this document expressly states that this specific NXP Semiconductors product is automotive qualified, the product is not suitable for automotive use. It is neither qualified nor tested in accordance with automotive testing or application requirements. NXP Semiconductors accepts no liability for inclusion and/or use of non-automotive qualified products in automotive equipment or applications.

In the event that customer uses the product for design-in and use in automotive applications to automotive specifications and standards, customer (a) shall use the product without NXP Semiconductors' warranty of the product for such automotive applications, use and specifications, and (b) whenever customer uses the product for automotive applications beyond NXP Semiconductors' specifications such use shall be solely at customer's own risk, and (c) customer fully indemnifies NXP Semiconductors for any liability, damages or failed product claims resulting from customer design and use of the product for automotive applications beyond NXP Semiconductors' standard warranty and NXP Semiconductors' product specifications.

HTML publications — An HTML version, if available, of this document is provided as a courtesy. Definitive information is contained in the applicable document in PDF format. If there is a discrepancy between the HTML document and the PDF document, the PDF document has priority.

Translations — A non-English (translated) version of a document, including the legal information in that document, is for reference only. The English version shall prevail in case of any discrepancy between the translated and English versions.

Security — Customer understands that all NXP products may be subject to unidentified vulnerabilities or may support established security standards or specifications with known limitations. Customer is responsible for the design and operation of its applications and products throughout their lifecycles to reduce the effect of these vulnerabilities on customer's applications and products. Customer's responsibility also extends to other open and/or proprietary technologies supported by NXP products for use in customer's applications. NXP accepts no liability for any vulnerability. Customer should regularly check security updates from NXP and follow up appropriately.

Customer shall select products with security features that best meet rules, regulations, and standards of the intended application and make the ultimate design decisions regarding its products and is solely responsible for compliance with all legal, regulatory, and security related requirements concerning its products, regardless of any information or support that may be provided by NXP.

NXP has a Product Security Incident Response Team (PSIRT) (reachable at PSIRT@nxp.com) that manages the investigation, reporting, and solution release to security vulnerabilities of NXP products.

NXP B.V. — NXP B.V. is not an operating company and it does not distribute or sell products.

Trademarks

Notice: All referenced brands, product names, service names, and trademarks are the property of their respective owners.

NXP — wordmark and logo are trademarks of NXP B.V.

All information provided in this document is subject to legal disclaimers.

© 2025 NXP B.V. All rights reserved.

Tables

Tab. 1. Ordering Information 2
Tab. 2. Pin description 4
Tab. 3. OTP configuration 8
Tab. 4. SNVS state 10
Tab. 5. Power up sequence 12
Tab. 6. States summary 13
Tab. 7. FAULT_SD from Thermal shutdown description 14
Tab. 8. FAULT_SD description 16
Tab. 9. PMIC Reset description 17
Tab. 10. PCA9460 Cold reset description 18
Tab. 11. Warm reset description 19
Tab. 12. PCA9460 Buck Summary 20
Tab. 13. 0x13 – BUCK23_DVS_CFG2 20
Tab. 14. MODE[2:0] pins configuration 22
Tab. 15. Low power mode 25
Tab. 16. LDO summary (PCA9460A) 26
Tab. 17. Load SW Enable table 27
Tab. 18. 0x0D – MODEPIN_CFG 28
Tab. 19. I2C address at Power-On Reset 30
Tab. 20. Register map 30
Tab. 21. Device_ID register (address 00h) bit allocation 33
Tab. 22. Device_ID register (address 00h) bit descriptions 33
Tab. 23. OTP_VER register (address 01h) bit allocation 34
Tab. 24. OTP_VER register (address 01h) bit descriptions 34
Tab. 25. INT1 register (address 02h) bit allocation 34
Tab. 26. INT1 register (address 02h) bit descriptions 34
Tab. 27. INT1_MASK register (address 03h) bit allocation 35
Tab. 28. INT1_MASK register (address 03h) bit descriptions 35
Tab. 29. INT1_STATUS register (address 04h) bit allocation 36
Tab. 30. INT1_STATUS register (address 04h) bit descriptions 36
Tab. 31. VRFLT1_INT register (address 05h) bit allocation 37
Tab. 32. VRFLT1_INT register (address 05h) bit descriptions 37
Tab. 33. VRFLT1_MASK register (address 06h) bit allocation 37
Tab. 34. VRFLT1_MASK register (address 06h) bit descriptions 37
Tab. 35. PWR_STATE register (address 07h) bit allocation 38
Tab. 36. PWR_STATE register (address 07h) bit descriptions 38
Tab. 37. RESET_CTRL register (address 08h) bit allocation 39
Tab. 38. RESET_CTRL register (address 08h) bit descriptions 39
Tab. 39. SW_RST register (address 09h) bit allocation 39
Tab. 40. SW_RST register (address 09h) bit descriptions 40
Tab. 41. PWR_SEQ_CTRL register (address 0Ah) bit allocation 40
Tab. 42. PWR_SEQ_CTRL register (address 0Ah) bit descriptions 40
Tab. 43. SYS_CFG1 register (address 0Bh) bit allocation 41
Tab. 44. SYS_CFG1 register (address 0Bh) bit descriptions 41
Tab. 45. SYS_CFG2 register (address 0Ch) bit allocation 41
Tab. 46. SYS_CFG2 register (address 0Ch) bit descriptions 41
Tab. 47. MODEPIN_CFG register (address 0Dh) bit allocation 42
Tab. 48. MODEPIN_CFG register (address 0Dh) bit descriptions 42
Tab. 49. BUCK1CTRL register (address 10h) bit allocation 43
Tab. 50. BUCK1CTRL register (address 10h) bit descriptions 43
Tab. 51. BUCK1OUT register (address 11h) bit allocation 43
Tab. 52. BUCK1OUT register (address 11h) bit descriptions 43
Tab. 53. BUCK23_DVS_CFG1 register (address 12h) bit allocation 44
Tab. 54. BUCK23_DVS_CFG1 register (address 12h) bit descriptions 44
Tab. 55. BUCK23_DVS_CFG2 register (address 13h) bit allocation 45
Tab. 56. BUCK23_DVS_CFG2 register (address 13h) bit descriptions 45
Tab. 57. BUCK2CTRL register (address 14h) bit allocation 45
Tab. 58. BUCK2CTRL register (address 14h) bit descriptions 45
Tab. 59. BUCK2OUT_DVS0 register (address 15h) bit allocation 46
Tab. 60. BUCK2OUT_DVS0 register (address 15h) bit descriptions 46
Tab. 61. BUCK2OUT_DVS1 register (address 16h) bit allocation 46
Tab. 62. BUCK2OUT_DVS1 register (address 16h) bit descriptions 46
Tab. 63. BUCK2OUT_DVS2 register (address 17h) bit allocation 47
Tab. 64. BUCK2OUT_DVS2 register (address 17h) bit descriptions 47
Tab. 65. BUCK2OUT_DVS3 register (address 18h) bit allocation 47
Tab. 66. BUCK2OUT_DVS3 register (address 18h) bit descriptions 47

All information provided in this document is subject to legal disclaimers.

© 2025 NXP B.V. All rights reserved.

Tab. 67. BUCK2OUT_DVS4 register (address 19h) bit allocation ... 47
Tab. 68. BUCK2OUT_DVS4 register (address 19h) bit descriptions ... 48
Tab. 69. BUCK2OUT_DVS5 register (address 1Ah) bit allocation ... 48
Tab. 70. BUCK2OUT_DVS5 register (address 1Ah) bit descriptions ... 48
Tab. 71. BUCK2OUT_DVS6 register (address 1Bh) bit allocation ... 48
Tab. 72. BUCK2OUT_DVS6 register (address 1Bh) bit descriptions ... 48
Tab. 73. BUCK2OUT_DVS7 register (address 1Ch) bit allocation ... 49
Tab. 74. BUCK2OUT_DVS7 register (address 1Ch) bit descriptions ... 49
Tab. 75. BUCK2OUT_STDBY register (address 1Dh) bit allocation ... 49
Tab. 76. BUCK2OUT_STDBY register (address 1Dh) bit descriptions ... 49
Tab. 77. BUCK2OUT_MAX_LIMIT register (address 1Fh) bit allocation ... 49
Tab. 78. BUCK2OUT_MAX_LIMIT register (address 1Fh) bit descriptions ... 50
Tab. 79. BUCK2OUT_MIN_LIMIT register (address 20h) bit allocation ... 50
Tab. 80. BUCK2OUT_MIN_LIMIT register (address 20h) bit descriptions ... 50
Tab. 81. BUCK3CTRL register (address 21h) bit allocation ... 50
Tab. 82. BUCK3CTRL register (address 21h) bit descriptions ... 50
Tab. 83. BUCK3OUT_DVS0 register (address 22h) bit allocation ... 51
Tab. 84. BUCK3OUT_DVS0 register (address 22h) bit descriptions ... 51
Tab. 85. BUCK3OUT_DVS1 register (address 23h) bit allocation ... 51
Tab. 86. BUCK3OUT_DVS1 register (address 23h) bit descriptions ... 51
Tab. 87. BUCK3OUT_DVS2 register (address 24h) bit allocation ... 52
Tab. 88. BUCK3OUT_DVS2 register (address 24h) bit descriptions ... 52
Tab. 89. BUCK3OUT_DVS3 register (address 25h) bit allocation ... 52
Tab. 90. BUCK3OUT_DVS3 register (address 25h) bit descriptions ... 52
Tab. 91. BUCK3OUT_DVS4 register (address 26h) bit allocation ... 53
Tab. 92. BUCK3OUT_DVS4 register (address 26h) bit descriptions ... 53
Tab. 93. BUCK3OUT_DVS5 register (address 27h) bit allocation ... 53
Tab. 94. BUCK3OUT_DVS5 register (address 27h) bit descriptions ... 53
Tab. 95. BUCK3OUT_DVS6 register (address 28h) bit allocation ... 53
Tab. 96. BUCK3OUT_DVS6 register (address 28h) bit descriptions ... 53
Tab. 97. BUCK3OUT_DVS7 register (address 29h) bit allocation ... 54
Tab. 98. BUCK3OUT_DVS7 register (address 29h) bit descriptions ... 54
Tab. 99. BUCK3OUT_STDBY register (address 2Ah) bit allocation ... 54
Tab. 100. BUCK3OUT_STDBY register (address 2Ah) bit descriptions ... 54
Tab. 101. BUCK3OUT_MAX_LIMIT register (address 2Ch) bit allocation ... 55
Tab. 102. BUCK3OUT_MAX_LIMIT register (address 2Ch) bit descriptions ... 55
Tab. 103. BUCK3OUT_MIN_LIMIT register (address 2Dh) bit allocation ... 55
Tab. 104. BUCK3OUT_MIN_LIMIT register (address 2Dh) bit descriptions ... 55
Tab. 105. BUCK4CTRL register (address 2Eh) bit allocation ... 55
Tab. 106. BUCK4CTRL register (address 2Eh) bit descriptions ... 56
Tab. 107. BUCK4OUT register (address 2Fh) bit allocation ... 56
Tab. 108. BUCK4OUT register (address 2Fh) bit descriptions ... 56
Tab. 109. BUCK2, BUCK3 Output voltage table ... 56
Tab. 110. BUCK1, BUCK4 Output voltage table ... 57
Tab. 111. LDO1_CFG register (address 30h) bit allocation ... 58
Tab. 112. LDO1_CFG register (address 30h) bit descriptions ... 59
Tab. 113. LDO1_OUT register (address 31h) bit allocation ... 59
Tab. 114. LDO1_OUT register (address 31h) bit descriptions ... 59
Tab. 115. L1_OUT values ... 60
Tab. 116. LDO2_CFG register (address 32h) bit allocation ... 60
Tab. 117. LDO2_CFG register (address 32h) bit descriptions ... 60
Tab. 118. LDO2_OUT_L register (address 33h) bit allocation ... 60
Tab. 119. LDO2_OUT_L register (address 33h) bit descriptions ... 61
Tab. 120. L2_OUT_L values ... 61
Tab. 121. LDO2_OUT_H register (address 34h) bit allocation ... 61
Tab. 122. LDO2_OUT_H register (address 34h) bit descriptions ... 61
Tab. 123. LDO3_CFG register (address 35h) bit allocation ... 62
Tab. 124. LDO3_CFG register (address 35h) bit descriptions ... 62
Tab. 125. LDO3_OUT register (address 36h) bit allocation ... 62
Tab. 126. LDO3_OUT register (address 36h) bit descriptions ... 62
Tab. 127. L3_OUT values ... 63

All information provided in this document is subject to legal disclaimers.

© 2025 NXP B.V. All rights reserved.

Tab. 128. LDO4_CFG register (address 37h) bit allocation ... 63
Tab. 129. LDO4_CFG register (address 37h) bit descriptions ... 63
Tab. 130. LDO4_OUT register (address 38h) bit allocation ... 64
Tab. 131. LDO4_OUT register (address 38h) bit descriptions ... 64
Tab. 132. L4_OUT values ... 64
Tab. 133. LDOSNVS_CFG register (address 39h) bit allocation ... 65
Tab. 134. LDOSNVS_CFG register (address 39h) bit descriptions ... 65
Tab. 135. L_SNVS_OUT values ... 65
Tab. 136. LSW1_CTRL register (address 40h) bit allocation ... 66
Tab. 137. LSW1_CTRL register (address 40h) bit descriptions ... 66
Tab. 138. LSW2_CTRL register (address 41h) bit allocation ... 66
Tab. 139. LSW2_CTRL register (address 41h) bit descriptions ... 66
Tab. 140. LSW3_CTRL register (address 42h) bit allocation ... 67
Tab. 141. LSW3_CTRL register (address 42h) bit descriptions ... 67
Tab. 142. LSW4_CTRL register (address 43h) bit allocation ... 67
Tab. 143. LSW4_CTRL register (address 43h) bit descriptions ... 67
Tab. 144. LED1_CTRL register (address 44h) bit allocation ... 68
Tab. 145. LED1_CTRL register (address 44h) bit descriptions ... 68
Tab. 146. LED1_BRT values ... 68
Tab. 147. LED2_CTRL register (address 45h) bit allocation ... 69
Tab. 148. LED2_CTRL register (address 45h) bit descriptions ... 69
Tab. 149. LED2_BRT values ... 69
Tab. 150. LED3_CTRL register (address 46h) bit allocation ... 69
Tab. 151. LED3_CTRL register (address 46h) bit descriptions ... 70
Tab. 152. LED3_BRT values ... 70
Tab. 153. LED4_CTRL register (address 47h) bit allocation ... 70
Tab. 154. LED4_CTRL register (address 47h) bit descriptions ... 70
Tab. 155. LED4_BRT values ... 71
Tab. 156. LED_P1_RAMP register (address 48h) bit allocation ... 71
Tab. 157. LED_P1_RAMP register (address 48h) bit descriptions ... 71
Tab. 158. LED_P1_BLNK register (address 49h) bit allocation ... 72
Tab. 159. LED_P1_BLNK register (address 49h) bit descriptions ... 72
Tab. 160. LEDTON1 values ... 72
Tab. 161. LEDTOFF1 values ... 72
Tab. 162. LED_P2_RAMP register (address 4Ah) bit allocation ... 72
Tab. 163. LED_P2_RAMP register (address 4Ah) bit descriptions ... 72
Tab. 164. LED_P2_BLNK register (address 4Bh) bit allocation ... 73
Tab. 165. LED_P2_BLNK register (address 4Bh) bit descriptions ... 73
Tab. 166. LEDTON2 ... 73
Tab. 167. LEDTOFF2 ... 73
Tab. 168. REG_LOCK register (address 4Eh) bit allocation ... 74
Tab. 169. REG_LOCK register (address 4Eh) bit descriptions ... 74
Tab. 170. External BOM ... 75
Tab. 171. Limiting values (Absolute Maximum Ratings) ... 78
Tab. 172. Recommended operating conditions ... 79
Tab. 173. Thermal characteristics ... 80
Tab. 174. Top level parameter description ... 81
Tab. 175. BUCK1 description ... 83
Tab. 176. BUCK2 description ... 84
Tab. 177. BUCK3 description ... 85
Tab. 178. BUCK4 description ... 86
Tab. 179. LDO_SNVS description ... 87
Tab. 180. LDO1 description ... 88
Tab. 181. LDO2 description ... 89
Tab. 182. LDO3 description ... 90
Tab. 183. LDO4 description ... 91
Tab. 184. LSW1 description ... 92
Tab. 185. LSW2 description ... 93
Tab. 186. LSW3 description ... 93
Tab. 187. LSW4 description ... 94
Tab. 188. LED driver (LED1/LED2/LED3/LED4) description ... 94
Tab. 189. I2C interface and logic I/O description ... 95
Tab. 190. Revision history ... 100

Figures

Fig. 1. Block diagram ... 3
Fig. 2. PCA9460 pin map – top view (bump-side down) ... 4
Fig. 3. PCA9460 functional block diagram ... 7
Fig. 4. Power states diagram ... 9
Fig. 5. SNVS state ON/OFF sequence ... 10
Fig. 6. PCA9460 power on source ... 10
Fig. 7. ACOK_B timing ... 11
Fig. 8. PMIC_RST_B block diagram ... 11
Fig. 9. PCA9460 power ON/OFF sequence ... 12
Fig. 10. PCA9460 FAULT_SD from thermal shutdown ... 14

All information provided in this document is subject to legal disclaimers.

© 2025 NXP B.V. All rights reserved.

Fig. 11. FAULT_SD from VR Fault in RUN state 15
Fig. 12. PCA9460 FAULT_SD from VR Fault in RUN/STANDBY 16
Fig. 13. PCA9460 Cold reset 18
Fig. 14. Warm reset 19
Fig. 15. DVS functional diagram 22
Fig. 16. MODE[2:0] pins operation at SMART_MODE = 0 23
Fig. 17. MODE[2:0] pins operation at SMART_MODE = 1b, MODE2_EN = 1b 24
Fig. 18. DVS timing 24
Fig. 19. Transition from PWM to PFM 25
Fig. 20. LED Driver block diagram 27
Fig. 21. LED Blink Pattern 28
Fig. 22. MODE[2:0] pins multiplex 29
Fig. 23. Interrupt diagram 30
Fig. 24. PCA9460 i.Mx 8ULP application schematic 75
Fig. 25. PCA9460 layout 78
Fig. 26. Package outline WLCSP-42 97
Fig. 27. PCB Design Guidelines – Solder Mask Opening Pattern 98
Fig. 28. PCB Design Guidelines – Solder Paste Stencil 99

All information provided in this document is subject to legal disclaimers.

© 2025 NXP B.V. All rights reserved.

Contents

1 General description ... 1
2 Features and benefits ... 1
3 Applications ... 2
4 Ordering information ... 2
5 Internal block diagram ... 3
6 Pinning information ... 4
6.1 Pinning ... 4
6.2 Pin description ... 4
7 Functional description ... 6
7.1 Features ... 6
7.2 Functional diagram ... 7
7.3 PCA9460 version ... 8
7.4 Power states ... 9
7.4.1 Off state ... 9
7.4.2 SNVS state ... 9
7.4.3 PWRUP state ... 10
7.4.3.1 Power ON sources ... 10
7.4.3.2 Power ON sequence ... 11
7.4.4 PWRDN state ... 13
7.4.5 RUN state ... 13
7.4.5.1 ACTIVE mode ... 13
7.4.5.2 STANDBY mode ... 13
7.4.5.3 DPSTANDBY mode ... 13
7.4.6 FAULT_SD state ... 14
7.5 PMIC reset ... 16
7.6 Regulator summary ... 19
7.6.1 BUCK regulator ... 19
7.6.1.1 ON/OFF control ... 20
7.6.1.2 Dynamic voltage scaling ... 20
7.6.1.3 Overshoot improvement from PWM to PFM mode transient ... 24
7.6.1.4 Low power mode ... 25
7.6.1.5 BUCK output limiting ... 25
7.6.2 LDO ... 26
7.6.3 Regulator protection ... 26
7.6.4 Current limit protection ... 26
7.7 Load switch and LED driver ... 27
7.8 Mode selection ... 28
7.8.1 MODE0, MODE1, MODE2 ... 28
7.9 Interrupt management ... 29
8 Software interface ... 30
8.1 Register map ... 30
8.2 Register details ... 33
8.2.1 Device_ID ... 33
8.2.2 OTP_VER ... 33
8.2.3 INT1 ... 34
8.2.4 INT1_MASK ... 35
8.2.5 INT1_STATUS ... 36
8.2.6 VRFLT1_INT ... 36
8.2.7 VRFLT1_MASK ... 37
8.2.8 PWR_STATE ... 38
8.2.9 RESET_CTRL ... 39
8.2.10 SW_RST ... 39
8.2.11 PWR_SEQ_CTRL ... 40
8.2.12 SYS_CFG1 ... 40
8.2.13 SYS_CFG2 ... 41
8.2.14 MODEPIN_CFG ... 42
8.2.15 BUCK1CTRL ... 43
8.2.16 BUCK1OUT ... 43
8.2.17 BUCK23_DVS_CFG1 ... 44
8.2.18 BUCK23_DVS_CFG2 ... 44
8.2.19 BUCK2CTRL ... 45
8.2.20 BUCK2OUT_DVS0 ... 46
8.2.21 BUCK2OUT_DVS1 ... 46
8.2.22 BUCK2OUT_DVS2 ... 47
8.2.23 BUCK2OUT_DVS3 ... 47
8.2.24 BUCK2OUT_DVS4 ... 47
8.2.25 BUCK2OUT_DVS5 ... 48
8.2.26 BUCK2OUT_DVS6 ... 48
8.2.27 BUCK2OUT_DVS7 ... 48
8.2.28 BUCK2OUT_STDBY ... 49
8.2.29 BUCK2OUT_MAX_LIMIT ... 49
8.2.30 BUCK2OUT_MIN_LIMIT ... 50
8.2.31 BUCK3CTRL ... 50
8.2.32 BUCK3OUT_DVS0 ... 51
8.2.33 BUCK3OUT_DVS1 ... 51
8.2.34 BUCK3OUT_DVS2 ... 52
8.2.35 BUCK3OUT_DVS3 ... 52
8.2.36 BUCK3OUT_DVS4 ... 52
8.2.37 BUCK3OUT_DVS5 ... 53
8.2.38 BUCK3OUT_DVS6 ... 53
8.2.39 BUCK3OUT_DVS7 ... 54
8.2.40 BUCK3OUT_STDBY ... 54
8.2.41 BUCK3OUT_MAX_LIMIT ... 54
8.2.42 BUCK3OUT_MIN_LIMIT ... 55
8.2.43 BUCK4CTRL ... 55
8.2.44 BUCK4OUT ... 56
8.2.45 LDO1_CFG ... 58
8.2.46 LDO1_OUT ... 59
8.2.47 LDO2_CFG ... 60
8.2.48 LDO2_OUT_L ... 60
8.2.49 LDO2_OUT_H ... 61
8.2.50 LDO3_CFG ... 62
8.2.51 LDO3_OUT ... 62
8.2.52 LDO4_CFG ... 63
8.2.53 LDO4_OUT ... 64
8.2.54 LDOSNVS_CFG ... 64
8.2.55 LSW1_CTRL ... 65
8.2.56 LSW2_CTRL ... 66
8.2.57 LSW3_CTRL ... 67
8.2.58 LSW4_CTRL ... 67
8.2.59 LED1_CTRL ... 68
8.2.60 LED2_CTRL ... 69
8.2.61 LED3_CTRL ... 69
8.2.62 LED4_CTRL ... 70
8.2.63 LED_P1_RAMP ... 71
8.2.64 LED_P1_BLNK ... 71
8.2.65 LED_P2_RAMP ... 72
8.2.66 LED_P2_BLNK ... 73
8.2.67 REG_LOCK ... 74
9 Application design-in information ... 74
9.1 Reference schematic ... 74

All information provided in this document is subject to legal disclaimers.

© 2025 NXP B.V. All rights reserved.

9.1.1 External BOM in reference schematic 75
9.2 Typical application 76
9.2.1 Detailed design procedure 76
9.2.2 Inductor selection for buck converters 76
9.2.3 Output capacitor selection for buck converters 77
9.2.4 Input capacitor selection for buck converters 77
9.3 Layout guide 78
10 Limiting values 78
11 Recommended operating conditions 79
12 Thermal characteristics 80
12.1 Rating data 80
12.2 Estimation of junction temperature 80
13 Electrical characteristics 81
13.1 Top level parameter 81
13.2 BUCK1 83
13.3 BUCK2 84
13.4 BUCK3 85
13.5 BUCK4 86
13.6 LDO_SNVS 87
13.7 LDO1 88
13.8 LDO2 89
13.9 LDO3 90
13.10 LDO4 91
13.11 LSW1 92
13.12 LSW2 93
13.13 LSW3 93
13.14 LSW4 94
13.15 LED driver (LED1/LED2/LED3/LED4) 94
13.16 I2C interface and logic I/O 95
14 Package outline 97
15 Revision history 100
Legal information 101

Please be aware that important notices concerning this document and the product(s) described herein, have been included in section 'Legal information'.

© 2025 NXP B.V. **All rights reserved.**

Looking for pricing, stock, or lifecycle information?

Click below to explore more details on WIN SOURCE:

- View PCA9460AUKZ on WIN SOURCE
- NXP / Nexperia Information

Optimize Your Supply Chain with WIN SOURCE Solutions

- Global Sourcing Solution
- Obsolete Management
- Cost Control Management
- Shortage Management
- Alternative Solution
- Excess Inventory Management