Freescale Semiconductor
Technical Data

MPC8555EEC
Rev. 4.2, 1/2008

MPC8555E PowerQUICC™ III Integrated Communications Processor Hardware Specification

The MPC8555E integrates a PowerPC™ processor core built on Power Architecture™ technology with system logic required for networking, telecommunications, and wireless infrastructure applications. The MPC8555E is a member of the PowerQUICC™ III family of devices that combine system-level support for industry-standard interfaces with processors that implement the embedded category of the Power Architecture technology. For functional characteristics of the processor, refer to the *MPC8555E PowerQUICC™ III Integrated Communications Processor Reference Manual*.

To locate any published errata or updates for this document refer to http://www.freescale.com or contact your Freescale sales office.

Contents

1. Overview 2
2. Electrical Characteristics 8
3. Power Characteristics 13
4. Clock Timing 15
5. RESET Initialization 16
6. DDR SDRAM 17
7. DUART 21
8. Ethernet: Three-Speed, MII Management 22
9. Local Bus 33
10. CPM 43
11. JTAG 50
12. I2C 52
13. PCI 54
14. Package and Pin Listings 56
15. Clocking 66
16. Thermal 69
17. System Design Information 78
18. Document Revision History 85
19. Device Nomenclature 86

© Freescale Semiconductor, Inc., 2008. All rights reserved.

1 Overview

The following section provides a high-level overview of the MPC8555E features. Figure 1 shows the major functional units within the MPC8555E.

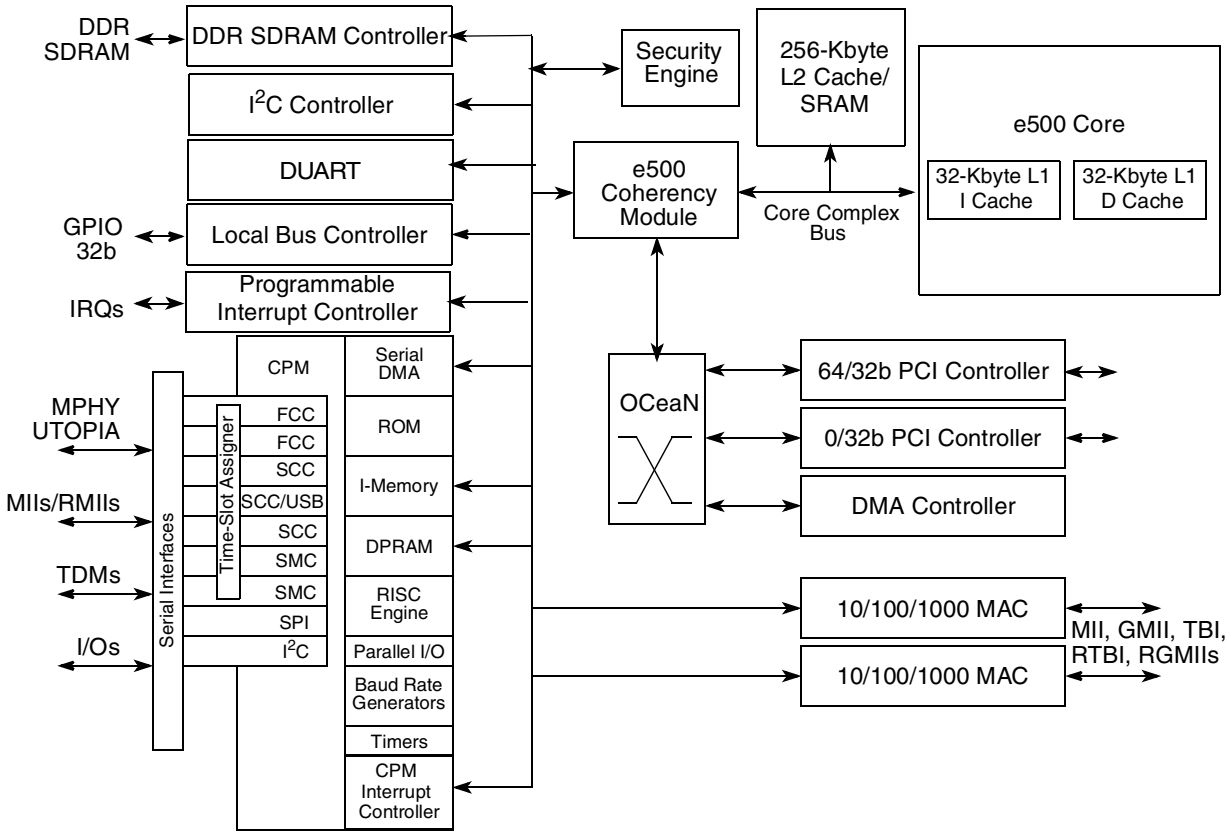

Figure 1. MPC8555E Block Diagram

1.1 Key Features

The following lists an overview of the MPC8555E feature set.

- Embedded e500 Book E-compatible core
  - — High-performance, 32-bit Book E-enhanced core that implements the PowerPC architecture
  - — Dual-issue superscalar, 7-stage pipeline design
  - — 32-Kbyte L1 instruction cache and 32-Kbyte L1 data cache with parity protection
  - — Lockable L1 caches—entire cache or on a per-line basis
  - — Separate locking for instructions and data
  - — Single-precision floating-point operations
  - — Memory management unit especially designed for embedded applications
  - — Enhanced hardware and software debug support
  - — Dynamic power management
  - — Performance monitor facility

- Security Engine is optimized to handle all the algorithms associated with IPSec, SSL/TLS, SRTP, IEEE Std 802.11i™, iSCSI, and IKE processing. The Security Engine contains 4 Crypto-channels, a Controller, and a set of crypto Execution Units (EUs). The Execution Units are:
  - Public Key Execution Unit (PKEU) supporting the following:
    - RSA and Diffie-Hellman
    - Programmable field size up to 2048-bits
    - Elliptic curve cryptography
    - F2m and F(p) modes
    - Programmable field size up to 511-bits
  - Data Encryption Standard Execution Unit (DEU)
    - DES, 3DES
    - Two key (K1, K2) or Three Key (K1, K2, K3)
    - ECB and CBC modes for both DES and 3DES
  - Advanced Encryption Standard Unit (AESU)
    - Implements the Rinjdael symmetric key cipher
    - Key lengths of 128, 192, and 256 bits.Two key
    - ECB, CBC, CCM, and Counter modes
  - ARC Four execution unit (AFEU)
    - Implements a stream cipher compatible with the RC4 algorithm
    - 40- to 128-bit programmable key
  - Message Digest Execution Unit (MDEU)
    - SHA with 160-bit or 256-bit message digest
    - MD5 with 128-bit message digest
    - HMAC with either algorithm
  - Random Number Generator (RNG)
  - 4 Crypto-channels, each supporting multi-command descriptor chains
    - Static and/or dynamic assignment of crypto-execution units via an integrated controller
    - Buffer size of 256 Bytes for each execution unit, with flow control for large data sizes
- High-performance RISC CPM operating at up to 333 MHz
  - CPM software compatibility with previous PowerQUICC families
  - One instruction per clock
  - Executes code from internal ROM or instruction RAM
  - 32-bit RISC architecture
  - Tuned for communication environments: instruction set supports CRC computation and bit manipulation.
  - Internal timer
  - Interfaces with the embedded e500 core processor through a 32-Kbyte dual-port RAM and virtual DMA channels for each peripheral controller
  - Handles serial protocols and virtual DMA

- — Two full-duplex fast communications controllers (FCCs) that support the following protocols:
  - – ATM protocol through two UTOPIA level 2 interfaces
  - – IEEE Std 802.3™/Fast Ethernet (10/100)
  - – HDLC
  - – Totally transparent operation
- — Three full-duplex serial communications controllers (SCCs) support the following protocols:
  - – High level/synchronous data link control (HDLC/SDLC)
  - – LocalTalk (HDLC-based local area network protocol)
  - – Universal asynchronous receiver transmitter (UART)
  - – Synchronous UART (1x clock mode)
  - – Binary synchronous communication (BISYNC)
  - – Totally transparent operation
  - – QMC support, providing 64 channels per SCC using only one physical TDM interface
- — Universal serial bus (USB) controller that is full/low-speed compliant (multiplexed on an SCC)
  - – USB host mode
  - – Supports USB slave mode
- — Serial peripheral interface (SPI) support for master or slave
- — I^2C bus controller
- — Two serial management controllers (SMCs) supporting:
  - – UART
  - – Transparent
  - – General-circuit interfaces (GCI)
- — Time-slot assigner supports multiplexing of data from any of the SCCs and FCCs onto eight time-division multiplexed (TDM) interfaces. The time-slot assigner supports the following TDM formats:
  - – T1/CEPT lines
  - – T3/E3
  - – Pulse code modulation (PCM) highway interface
  - – ISDN primary rate
  - – Freescale interchip digital link (IDL)
  - – General circuit interface (GCI)
- — User-defined interfaces
- — Eight independent baud rate generators (BRGs)
- — Four general-purpose 16-bit timers or two 32-bit timers
- — General-purpose parallel ports—16 parallel I/O lines with interrupt capability

• 256 Kbytes of on-chip memory
  - — Can act as a 256-Kbyte level-2 cache
  - — Can act as a 256-Kbyte or two 128-Kbyte memory-mapped SRAM arrays

  - Can be partitioned into 128-Kbyte L2 cache plus 128-Kbyte SRAM
  - Full ECC support on 64-bit boundary in both cache and SRAM modes
  - SRAM operation supports relocation and is byte-accessible
  - Cache mode supports instruction caching, data caching, or both
  - External masters can force data to be allocated into the cache through programmed memory ranges or special transaction types (stashing).
  - Eight-way set-associative cache organization (1024 sets of 32-byte cache lines)
  - Supports locking the entire cache or selected lines
    - Individual line locks set and cleared through Book E instructions or by externally mastered transactions
  - Global locking and flash clearing done through writes to L2 configuration registers
  - Instruction and data locks can be flash cleared separately
  - Read and write buffering for internal bus accesses
- Address translation and mapping unit (ATMU)
  - Eight local access windows define mapping within local 32-bit address space
  - Inbound and outbound ATMUs map to larger external address spaces
    - Three inbound windows plus a configuration window on PCI
    - Four inbound windows
    - Four outbound windows plus default translation for PCI
- DDR memory controller
  - Programmable timing supporting first generation DDR SDRAM
  - 64-bit data interface, up to MHz data rate
  - Four banks of memory supported, each up to 1 Gbyte
  - DRAM chip configurations from 64 Mbits to 1 Gbit with x8/x16 data ports
  - Full ECC support
  - Page mode support (up to 16 simultaneous open pages)
  - Contiguous or discontiguous memory mapping
  - Sleep mode support for self refresh DDR SDRAM
  - Supports auto refreshing
  - On-the-fly power management using CKE signal
  - Registered DIMM support
  - Fast memory access via JTAG port
  - 2.5-V SSTL2 compatible I/O
- Programmable interrupt controller (PIC)
  - Programming model is compliant with the OpenPIC architecture
  - Supports 16 programmable interrupt and processor task priority levels
  - Supports 12 discrete external interrupts
  - Supports 4 message interrupts with 32-bit messages

  - Supports connection of an external interrupt controller such as the 8259 programmable interrupt controller
  - Four global high resolution timers/counters that can generate interrupts
  - Supports additional internal interrupt sources
  - Supports fully nested interrupt delivery
  - Interrupts can be routed to external pin for external processing
  - Interrupts can be routed to the e500 core's standard or critical interrupt inputs
  - Interrupt summary registers allow fast identification of interrupt source
- Two I^2C controllers (one is contained within the CPM, the other is a stand-alone controller which is not part of the CPM)
  - Two-wire interface
  - Multiple master support
  - Master or slave I^2C mode support
  - On-chip digital filtering rejects spikes on the bus
- Boot sequencer
  - Optionally loads configuration data from serial ROM at reset via the stand-alone I^2C interface
  - Can be used to initialize configuration registers and/or memory
  - Supports extended I^2C addressing mode
  - Data integrity checked with preamble signature and CRC
- DUART
  - Two 4-wire interfaces (RXD, TXD, RTS, CTS)
  - Programming model compatible with the original 16450 UART and the PC16550D
- Local bus controller (LBC)
  - Multiplexed 32-bit address and data operating at up to 166 MHz
  - Eight chip selects support eight external slaves
  - Up to eight-beat burst transfers
  - The 32-, 16-, and 8-bit port sizes are controlled by an on-chip memory controller
  - Three protocol engines available on a per chip select basis:
    - General purpose chip select machine (GPCM)
    - Three user programmable machines (UPMs)
    - Dedicated single data rate SDRAM controller
  - Parity support
  - Default boot ROM chip select with configurable bus width (8-, 16-, or 32-bit)
- Two Three-speed (10/100/1000)Ethernet controllers (TSECs)
  - Dual IEEE 802.3, 802.3u, 802.3x, 802.3z AC compliant controllers
  - Support for Ethernet physical interfaces:
    - 10/100/1000 Mbps IEEE 802.3 GMII
    - 10/100 Mbps IEEE 802.3 MII

  - 10 Mbps IEEE 802.3 MII
  - 1000 Mbps IEEE 802.3z TBI
  - 10/100/1000 Mbps RGMII/RTBI
  - Full- and half-duplex support
  - Buffer descriptors are backwards compatible with MPC8260 and MPC860T 10/100 programming models
  - 9.6-Kbyte jumbo frame support
  - RMON statistics support
  - 2-Kbyte internal transmit and receive FIFOs
  - MII management interface for control and status
  - Programmable CRC generation and checking
- OCeaN switch fabric
  - Three-port crossbar packet switch
  - Reorders packets from a source based on priorities
  - Reorders packets to bypass blocked packets
  - Implements starvation avoidance algorithms
  - Supports packets with payloads of up to 256 bytes
- Integrated DMA controller
  - Four-channel controller
  - All channels accessible by both local and remote masters
  - Extended DMA functions (advanced chaining and striding capability)
  - Support for scatter and gather transfers
  - Misaligned transfer capability
  - Interrupt on completed segment, link, list, and error
  - Supports transfers to or from any local memory or I/O port
  - Selectable hardware-enforced coherency (snoop/no-snoop)
  - Ability to start and flow control each DMA channel from external 3-pin interface
  - Ability to launch DMA from single write transaction
- PCI Controllers
  - PCI 2.2 compatible
  - One 64-bit or two 32-bit PCI ports supported at 16 to 66 MHz
  - Host and agent mode support, 64-bit PCI port can be host or agent, if two 32-bit ports, only one can be an agent
  - 64-bit dual address cycle (DAC) support
  - Supports PCI-to-memory and memory-to-PCI streaming
  - Memory prefetching of PCI read accesses
  - Supports posting of processor-to-PCI and PCI-to-memory writes

  - PCI 3.3-V compatible
  - Selectable hardware-enforced coherency
  - Selectable clock source (SYSCLK or independent PCI_CLK)
- Power management
  - Fully static 1.2-V CMOS design with 3.3- and 2.5-V I/O
  - Supports power save modes: doze, nap, and sleep
  - Employs dynamic power management
  - Selectable clock source (sysclk or independent PCI_CLK)
- System performance monitor
  - Supports eight 32-bit counters that count the occurrence of selected events
  - Ability to count up to 512 counter specific events
  - Supports 64 reference events that can be counted on any of the 8 counters
  - Supports duration and quantity threshold counting
  - Burstiness feature that permits counting of burst events with a programmable time between bursts
  - Triggering and chaining capability
  - Ability to generate an interrupt on overflow
- System access port
  - Uses JTAG interface and a TAP controller to access entire system memory map
  - Supports 32-bit accesses to configuration registers
  - Supports cache-line burst accesses to main memory
  - Supports large block (4-Kbyte) uploads and downloads
  - Supports continuous bit streaming of entire block for fast upload and download
- IEEE Std 1149.1™-compatible, JTAG boundary scan
- 783 FC-PBGA package

2 Electrical Characteristics

This section provides the AC and DC electrical specifications and thermal characteristics for the MPC8555E. The MPC8555E is currently targeted to these specifications. Some of these specifications are independent of the I/O cell, but are included for a more complete reference. These are not purely I/O buffer design specifications.

2.1 Overall DC Electrical Characteristics

This section covers the ratings, conditions, and other characteristics.

2.1.1 Absolute Maximum Ratings

Table 1 provides the absolute maximum ratings.

Table 1. Absolute Maximum Ratings [1]

Characteristic		Symbol	Max Value	Unit	Notes
Core supply voltage		V_{DD}	–0.3 to 1.32 0.3 to 1.43 (for 1 GHz only)	V	
PLL supply voltage		AV_{DD}	–0.3 to 1.32 0.3 to 1.43 (for 1 GHz only)	V	
DDR DRAM I/O voltage		GV_{DD}	–0.3 to 3.63	V	
Three-speed Ethernet I/O, MII management voltage		LV_{DD}	–0.3 to 3.63 –0.3 to 2.75	V	
CPM, PCI, local bus, DUART, system control and power management, I^2C, and JTAG I/O voltage		OV_{DD}	–0.3 to 3.63	V	3
Input voltage	DDR DRAM signals	MV_{IN}	–0.3 to (GV_{DD} + 0.3)	V	2, 5
	DDR DRAM reference	MV_{REF}	–0.3 to (GV_{DD} + 0.3)	V	2, 5
	Three-speed Ethernet signals	LV_{IN}	–0.3 to (LV_{DD} + 0.3)	V	4, 5
	CPM, Local bus, DUART, SYSCLK, system control and power management, I^2C, and JTAG signals	OV_{IN}	–0.3 to (OV_{DD} + 0.3)1	V	5
	PCI	OV_{IN}	–0.3 to (OV_{DD} + 0.3)	V	6
Storage temperature range		T_{STG}	–55 to 150	°C	

Notes:
1. Functional and tested operating conditions are given in Table 2. Absolute maximum ratings are stress ratings only, and functional operation at the maximums is not guaranteed. Stresses beyond those listed may affect device reliability or cause permanent damage to the device.
2. **Caution:** MV_{IN} must not exceed GV_{DD} by more than 0.3 V. This limit may be exceeded for a maximum of 20 ms during power-on reset and power-down sequences.
3. **Caution:** OV_{IN} must not exceed OV_{DD} by more than 0.3 V. This limit may be exceeded for a maximum of 20 ms during power-on reset and power-down sequences.
4. **Caution:** LV_{IN} must not exceed LV_{DD} by more than 0.3 V. This limit may be exceeded for a maximum of 20 ms during power-on reset and power-down sequences.
5. (M,L,O)V_{IN} and MV_{REF} may overshoot/undershoot to a voltage and for a maximum duration as shown in Figure 2.
6. OV_{IN} on the PCI interface may overshoot/undershoot according to the PCI Electrical Specification for 3.3-V operation, as shown in Figure 3.

2.1.2 Power Sequencing

The MPC8555Erequires its power rails to be applied in a specific sequence in order to ensure proper device operation. These requirements are as follows for power up:

1. V_{DD}, AV_{DDn}
2. GV_{DD}, LV_{DD}, OV_{DD} (I/O supplies)

Items on the same line have no ordering requirement with respect to one another. Items on separate lines must be ordered sequentially such that voltage rails on a previous step must reach 90 percent of their value before the voltage rails on the current step reach ten percent of theirs.

NOTE

If the items on line 2 must precede items on line 1, please ensure that the delay does not exceed 500 ms and the power sequence is not done greater than once per day in production environment.

NOTE

From a system standpoint, if the I/O power supplies ramp prior to the V_{DD} core supply, the I/Os on the MPC8555E may drive a logic one or zero during power-up.

2.1.3 Recommended Operating Conditions

Table 2 provides the recommended operating conditions for the MPC8555E. Note that the values in Table 2 are the recommended and tested operating conditions. Proper device operation outside of these conditions is not guaranteed.

Table 2. Recommended Operating Conditions

Characteristic		Symbol	Recommended Value	Unit
Core supply voltage		V_{DD}	1.2 V ± 60 mV 1.3 V± 50 mV (for 1 GHz only)	V
PLL supply voltage		AV_{DD}	1.2 V ± 60 mV 1.3 V ± 50 mV (for 1 GHz only)	V
DDR DRAM I/O voltage		GV_{DD}	2.5 V ± 125 mV	V
Three-speed Ethernet I/O voltage		LV_{DD}	3.3 V ± 165 mV 2.5 V ± 125 mV	V
PCI, local bus, DUART, system control and power management, I^2C, and JTAG I/O voltage		OV_{DD}	3.3 V ± 165 mV	V
Input voltage	DDR DRAM signals	MV_{IN}	GND to GV_{DD}	V
	DDR DRAM reference	MV_{REF}	GND to GV_{DD}	V
	Three-speed Ethernet signals	LV_{IN}	GND to LV_{DD}	V
	PCI, local bus, DUART, SYSCLK, system control and power management, I^2C, and JTAG signals	OV_{IN}	GND to OV_{DD}	V
Die-junction Temperature		T_j	0 to 105	°C

Figure 2 shows the undershoot and overshoot voltages at the interfaces of the MPC8555E.

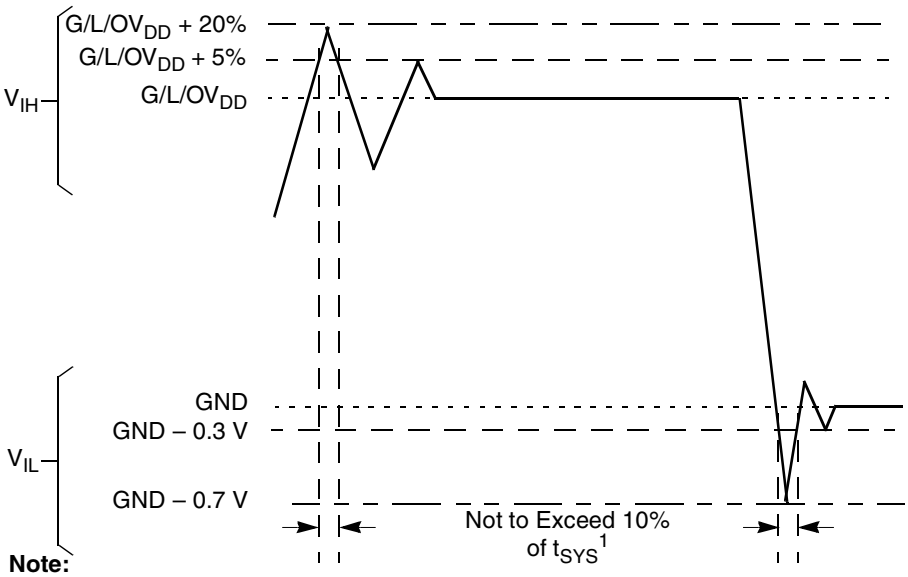

Note:
1. Note that t_{SYS} refers to the clock period associated with the SYSCLK signal.

Figure 2. Overshoot/Undershoot Voltage for $GV_{DD}/OV_{DD}/LV_{DD}$

The MPC8555E core voltage must always be provided at nominal 1.2 V (see Table 2 for actual recommended core voltage). Voltage to the processor interface I/Os are provided through separate sets of supply pins and must be provided at the voltages shown in Table 2. The input voltage threshold scales with respect to the associated I/O supply voltage. OV_{DD} and LV_{DD} based receivers are simple CMOS I/O circuits and satisfy appropriate LVCMOS type specifications. The DDR SDRAM interface uses a single-ended differential receiver referenced the externally supplied MV_{REF} signal (nominally set to $GV_{DD}/2$) as is appropriate for the SSTL2 electrical signaling standard.

Figure 3 shows the undershoot and overshoot voltage of the PCI interface of the MPC8555E for the 3.3-V signals, respectively.

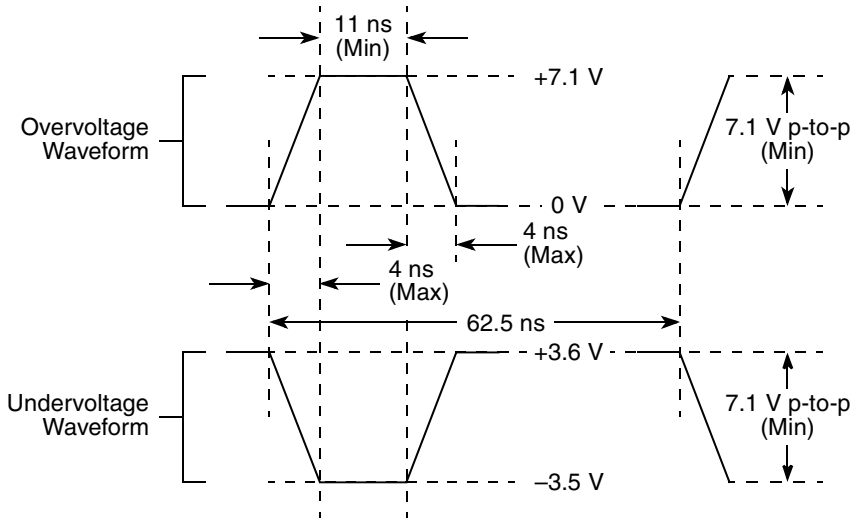

Figure 3. Maximum AC Waveforms on PCI interface for 3.3-V Signaling

2.1.4 Output Driver Characteristics

Table 3 provides information on the characteristics of the output driver strengths. The values are preliminary estimates.

Table 3. Output Drive Capability

Driver Type	Programmable Output Impedance (Ω)	Supply Voltage	Notes
Local bus interface utilities signals	25	OV_{DD} = 3.3 V	1
	42 (default)		
PCI signals	25		2
	42 (default)		
DDR signal	20	GV_{DD} = 2.5 V	
TSEC/10/100 signals	42	LV_{DD} = 2.5/3.3 V	
DUART, system control, I2C, JTAG	42	OV_{DD} = 3.3 V	

Notes:
1. The drive strength of the local bus interface is determined by the configuration of the appropriate bits in PORIMPSCR.
2. The drive strength of the PCI interface is determined by the setting of the $\overline{\text{PCI_GNT1}}$ signal at reset.

3 Power Characteristics

The estimated typical power dissipation for this family of PowerQUICC III devices is shown in Table 4.

Table 4. Power Dissipation(1) (2)

CCB Frequency (MHz)	Core Frequency (MHz)	V_{DD}	Typical Power(3)(4) (W)	Maximum Power(5) (W)
200	400	1.2	4.9	6.6
	500	1.2	5.2	7.0
	600	1.2	5.5	7.3
267	533	1.2	5.4	7.2
	667	1.2	5.9	7.7
	800	1.2	6.3	9.1
333	667	1.2	6.0	7.9
	833	1.2	6.5	9.3
	1000(6)	1.3	9.6	12.8

Notes:

1. The values do not include I/O supply power (OV_{DD}, LV_{DD}, GV_{DD}) or AV_{DD}.
2. Junction temperature is a function of die size, on-chip power dissipation, package thermal resistance, mounting site (board) temperature, ambient temperature, air flow, power dissipation of other components on the board, and board thermal resistance. Any customer design must take these considerations into account to ensure the maximum 105 degrees junction temperature is not exceeded on this device.
3. Typical power is based on a nominal voltage of V_{DD} = 1.2V, a nominal process, a junction temperature of T_j = 105° C, and a Dhrystone 2.1 benchmark application.
4. Thermal solutions likely need to design to a value higher than Typical Power based on the end application, T_A target, and I/O power
5. Maximum power is based on a nominal voltage of V_{DD} = 1.2V, worst case process, a junction temperature of T_j = 105° C, and an artificial smoke test.
6. The nominal recommended V_{DD} = 1.3V for this speed grade.

Notes:

1.

2.

3.

4.

5.

6.

Table 5. Typical I/O Power Dissipation

Interface	Parameters	GV_{DD} (2.5 V)	OV_{DD} (3.3 V)	LV_{DD} (3.3 V)	LV_{DD} (2.5 V)	Unit	Comments
DDR I/O	CCB = 200 MHz	0.46	—	—	—	W	—
	CCB = 266 MHz	0.59	—	—	—	W	—
	CCB = 300 MHz	0.66	—	—	—	W	—
	CCB = 333 MHz	0.73	—	—	—	W	—
PCI I/O	64b, 66 MHz	—	0.14	—	—	W	—
	64b, 33 MHz	—	0.08	—	—	W	—
	32b, 66 MHz	—	0.07	—	—	W	Multiply by 2 if using two 32b ports
	32b, 33 MHz	—	0.04	—	—	W	
Local Bus I/O	32b, 167 MHz	—	0.30	—	—	W	—
	32b, 133 MHz	—	0.24	—	—	W	—
	32b, 83 MHz	—	0.16	—	—	W	—
	32b, 66 MHz	—	0.13	—	—	W	—
	32b, 33 MHz	—	0.07	—	—	W	—
TSEC I/O	MII	—	—	0.01	—	W	Multiply by number of interfaces used.
	GMII or TBI	—	—	0.07	—	W	
	RGMII or RTBI	—	—	—	0.04	W	
CPM - FCC	MII	—	0.015	—	—	W	—
	RMII	—	0.013	—	—	W	—
	HDLC 16 Mbps	—	0.009	—	—	W	—
	UTOPIA-8 SPHY	—	0.06	—	—	W	—
	UTOPIA-8 MPHY	—	0.1	—	—	W	—
	UTOPIA-16 SPHY	—	0.094	—	—	W	—
	UTOPIA-16 MPHY	—	0.135	—	—	W	—
CPM - SCC	HDLC 16 Mbps	—	0.004	—	—	W	—
TDMA or TDMB	Nibble Mode	—	0.01	—	—	W	—
TDMA or TDMB	Per Channel	—	0.005	—	—	W	Up to 4 TDM channels, multiply by number of TDM channels.

4 Clock Timing

4.1 System Clock Timing

Table 6 provides the system clock (SYSCLK) AC timing specifications for the MPC8555E.

Table 6. SYSCLK AC Timing Specifications

Parameter/Condition	Symbol	Min	Typical	Max	Unit	Notes
SYSCLK frequency	f_{SYSCLK}	—	—	166	MHz	1
SYSCLK cycle time	t_{SYSCLK}	6.0	—	—	ns	—
SYSCLK rise and fall time	t_{KH}, t_{KL}	0.6	1.0	1.2	ns	2
SYSCLK duty cycle	t_{KHK}/t_{SYSCLK}	40	—	60	%	3
SYSCLK jitter	—	—	—	+/- 150	ps	4, 5

Notes:
1. **Caution:** The CCB to SYSCLK ratio and e500 core to CCB ratio settings must be chosen such that the resulting SYSCLK frequency, e500 (core) frequency, and CCB frequency do not exceed their respective maximum or minimum operating frequencies.
2. Rise and fall times for SYSCLK are measured at 0.6 and 2.7 V.
3. Timing is guaranteed by design and characterization.
4. This represents the total input jitter—short term and long term—and is guaranteed by design.
5. For spread spectrum clocking, guidelines are ±1% of the input frequency with a maximum of 60 kHz of modulation regardless of the input frequency.

4.2 TSEC Gigabit Reference Clock Timing

Table 7 provides the TSEC gigabit reference clock (EC_GTX_CLK125) AC timing specifications for the MPC8555E.

Table 7. EC_GTX_CLK125 AC Timing Specifications

Parameter/Condition	Symbol	Min	Typical	Max	Unit	Notes
EC_GTX_CLK125 frequency	f_{G125}	—	125	—	MHz	—
EC_GTX_CLK125 cycle time	t_{G125}	—	8	—	ns	—
EC_GTX_CLK125 rise time	t_{G125R}	—	—	1.0	ns	1
EC_GTX_CLK125 fall time	t_{G125F}	—	—	1.0	ns	1
EC_GTX_CLK125 duty cycle GMII, TBI RGMII, RTBI	t_{G125H}/t_{G125}	 45 47	—	 55 53	%	1, 2

Notes:
1. Timing is guaranteed by design and characterization.
2. EC_GTX_CLK125 is used to generate GTX clock for TSEC transmitter with 2% degradation. EC_GTX_CLK125 duty cycle can be loosened from 47/53% as long as PHY device can tolerate the duty cycle generated by GTX_CLK of TSEC.

4.3 Real Time Clock Timing

Table 8 provides the real time clock (RTC) AC timing specifications.

Table 8. RTC AC Timing Specifications

Parameter/Condition	Symbol	Min	Typical	Max	Unit	Notes
RTC clock high time	t_{RTCH}	2 x t_{CCB_CLK}	—	—	ns	—
RTC clock low time	t_{RTCL}	2 x t_{CCB_CLK}	—	—	ns	—

5 RESET Initialization

This section describes the AC electrical specifications for the RESET initialization timing requirements of the MPC8555E. Table 9 provides the RESET initialization AC timing specifications.

Table 9. RESET Initialization Timing Specifications

Parameter/Condition	Min	Max	Unit	Notes
Required assertion time of $\overline{\text{HRESET}}$	100	—	µs	—
Minimum assertion time for $\overline{\text{SRESET}}$	512	—	SYSCLKs	1
PLL input setup time with stable SYSCLK before HRESET negation	100	—	µs	—
Input setup time for POR configs (other than PLL config) with respect to negation of $\overline{\text{HRESET}}$	4	—	SYSCLKs	1
Input hold time for POR configs (including PLL config) with respect to negation of $\overline{\text{HRESET}}$	2	—	SYSCLKs	1
Maximum valid-to-high impedance time for actively driven POR configs with respect to negation of $\overline{\text{HRESET}}$	—	5	SYSCLKs	1

Notes:
1. SYSCLK is identical to the PCI_CLK signal and is the primary clock input for the MPC8555E. See the *MPC8555E PowerQUICC™ III Integrated Communications Processor Reference Manual* for more details.

Table 10 provides the PLL and DLL lock times.

Table 10. PLL and DLL Lock Times

Parameter/Condition	Min	Max	Unit	Notes
PLL lock times	—	100	µs	—
DLL lock times	7680	122,880	CCB Clocks	1, 2

Notes:
1. DLL lock times are a function of the ratio between the output clock and the platform (or CCB) clock. A 2:1 ratio results in the minimum and an 8:1 ratio results in the maximum.
2. The CCB clock is determined by the SYSCLK × platform PLL ratio.

6 DDR SDRAM

This section describes the DC and AC electrical specifications for the DDR SDRAM interface of the MPC8555E.

6.1 DDR SDRAM DC Electrical Characteristics

Table 11 provides the recommended operating conditions for the DDR SDRAM component(s) of the MPC8555E.

Table 11. DDR SDRAM DC Electrical Characteristics

Parameter/Condition	Symbol	Min	Max	Unit	Notes
I/O supply voltage	GV_{DD}	2.375	2.625	V	1
I/O reference voltage	MV_{REF}	$0.49 \times GV_{DD}$	$0.51 \times GV_{DD}$	V	2
I/O termination voltage	V_{TT}	$MV_{REF} - 0.04$	$MV_{REF} + 0.04$	V	3
Input high voltage	V_{IH}	$MV_{REF} + 0.18$	$GV_{DD} + 0.3$	V	—
Input low voltage	V_{IL}	–0.3	$MV_{REF} - 0.18$	V	—
Output leakage current	I_{OZ}	–10	10	μA	4
Output high current (V_{OUT} = 1.95 V)	I_{OH}	–15.2	—	mA	—
Output low current (V_{OUT} = 0.35 V)	I_{OL}	15.2	—	mA	—
MV_{REF} input leakage current	I_{VREF}	—	5	μA	—

Notes:
1. GV_{DD} is expected to be within 50 mV of the DRAM GV_{DD} at all times.
2. MV_{REF} is expected to be equal to $0.5 \times GV_{DD}$, and to track GV_{DD} DC variations as measured at the receiver. Peak-to-peak noise on MV_{REF} may not exceed ±2% of the DC value.
3. V_{TT} is not applied directly to the device. It is the supply to which far end signal termination is made and is expected to be equal to MV_{REF}. This rail should track variations in the DC level of MV_{REF}.
4. Output leakage is measured with all outputs disabled, $0\ V \le V_{OUT} \le GV_{DD}$.

Table 12 provides the DDR capacitance.

Table 12. DDR SDRAM Capacitance

Parameter/Condition	Symbol	Min	Max	Unit	Notes
Input/output capacitance: DQ, DQS, MSYNC_IN	C_{IO}	6	8	pF	1
Delta input/output capacitance: DQ, DQS	C_{DIO}	—	0.5	pF	1

Note:
1. This parameter is sampled. GV_{DD} = 2.5 V ± 0.125 V, f = 1 MHz, T_A = 25°C, $V_{OUT} = GV_{DD}/2$, V_{OUT} (peak to peak) = 0.2 V.

6.2 DDR SDRAM AC Electrical Characteristics

This section provides the AC electrical characteristics for the DDR SDRAM interface.

6.2.1 DDR SDRAM Input AC Timing Specifications

Table 13 provides the input AC timing specifications for the DDR SDRAM interface.

Table 13. DDR SDRAM Input AC Timing Specifications

At recommended operating conditions with GV_{DD} of 2.5 V ± 5%.

Parameter	Symbol	Min	Max	Unit	Notes
AC input low voltage	V_{IL}	—	MV_{REF} – 0.31	V	—
AC input high voltage	V_{IH}	MV_{REF} + 0.31	GV_{DD} + 0.3	V	—
MDQS—MDQ/MECC input skew per byte For DDR = 333 MHz For DDR ≤ 266 MHz	t_{DISKEW}	—	 750 1125	ps	1

Note:

1. Maximum possible skew between a data strobe (MDQS[n]) and any corresponding bit of data (MDQ[8n + {0...7}] if 0 <= n <= 7) or ECC (MECC[{0...7}] if n = 8).

6.2.2 DDR SDRAM Output AC Timing Specifications

Table 14 and Table 15 provide the output AC timing specifications and measurement conditions for the DDR SDRAM interface.

Table 14. DDR SDRAM Output AC Timing Specifications for Source Synchronous Mode

At recommended operating conditions with GV_{DD} of 2.5 V ± 5%.

Parameter	Symbol [1]	Min	Max	Unit	Notes
MCK[n] cycle time, (MCK[n]/$\overline{\text{MCK}}$[n] crossing)	t_{MCK}	6	10	ns	2
Skew between any MCK to ADDR/CMD 333 MHz 266 MHz 200 MHz	t_{AOSKEW}	 –1000 –1100 –1200	 200 300 400	ps	3
ADDR/CMD output setup with respect to MCK 333 MHz 266 MHz 200 MHz	t_{DDKHAS}	 2.8 3.45 4.6	—	ns	4
ADDR/CMD output hold with respect to MCK 333 MHz 266 MHz 200 MHz	t_{DDKHAX}	 2.0 2.65 3.8	—	ns	4
$\overline{\text{MCS}}$(n) output setup with respect to MCK 333 MHz 266 MHz 200 MHz	t_{DDKHCS}	 2.8 3.45 4.6	—	ns	4

Table 14. DDR SDRAM Output AC Timing Specifications for Source Synchronous Mode (continued)

At recommended operating conditions with GV_{DD} of 2.5 V ± 5%.

Parameter	Symbol [1]	Min	Max	Unit	Notes
$\overline{MCS}$(n) output hold with respect to MCK 333 MHz 266 MHz 200 MHz	t_{DDKHCX}	 2.0 2.65 3.8	—	ns	4
MCK to MDQS 333 MHz 266 MHz 200 MHz	t_{DDKHMH}	 –0.9 –1.1 –1.2	 0.3 0.5 0.6	ns	5
MDQ/MECC/MDM output setup with respect to MDQS 333 MHz 266 MHz 200 MHz	t_{DDKHDS}, t_{DDKLDS}	 900 900 1200	—	ps	6
MDQ/MECC/MDM output hold with respect to MDQS 333 MHz 266 MHz 200 MHz	t_{DDKHDX}, t_{DDKLDX}	 900 900 1200	—	ps	6
MDQS preamble start	t_{DDKHMP}	$-0.5 \times t_{MCK} - 0.9$	$-0.5 \times t_{MCK} + 0.3$	ns	7
MDQS epilogue end	t_{DDKLME}	–0.9	0.3	ns	7

Notes:

1. The symbols used for timing specifications follow the pattern of $t_{\text{(first two letters of functional block)(signal)(state) (reference)(state)}}$ for inputs and $t_{\text{(first two letters of functional block)(reference)(state)(signal)(state)}}$ for outputs. Output hold time can be read as DDR timing (DD) from the rising or falling edge of the reference clock (KH or KL) until the output went invalid (AX or DX). For example, t_{DDKHAS} symbolizes DDR timing (DD) for the time t_{MCK} memory clock reference (K) goes from the high (H) state until outputs (A) are setup (S) or output valid time. Also, t_{DDKLDX} symbolizes DDR timing (DD) for the time t_{MCK} memory clock reference (K) goes low (L) until data outputs (D) are invalid (X) or data output hold time.
2. All MCK/$\overline{MCK}$ referenced measurements are made from the crossing of the two signals ±0.1 V.
3. In the source synchronous mode, MCK/$\overline{MCK}$ can be shifted in 1/4 applied cycle increments through the Clock Control Register. For the skew measurements referenced for t_{AOSKEW} it is assumed that the clock adjustment is set to align the address/command valid with the rising edge of MCK.
4. ADDR/CMD includes all DDR SDRAM output signals except MCK/$\overline{MCK}$, $\overline{MCS}$, and MDQ/MECC/MDM/MDQS. For the ADDR/CMD setup and hold specifications, it is assumed that the Clock Control register is set to adjust the memory clocks by 1/2 applied cycle. The MCSx pins are separated from the ADDR/CMD (address and command) bus in the HW spec. This was separated because the MCSx pins typically have different loadings than the rest of the address and command bus, even though they have the same timings.
5. Note that t_{DDKHMH} follows the symbol conventions described in note 1. For example, t_{DDKHMH} describes the DDR timing (DD) from the rising edge of the MCK(n) clock (KH) until the MDQS signal is valid (MH). In the source synchronous mode, MDQS can launch later than MCK by 0.3 ns at the maximum. However, MCK may launch later than MDQS by as much as 0.9 ns. t_{DDKHMH} can be modified through control of the DQSS override bits in the TIMING_CFG_2 register. In source synchronous mode, this typically is set to the same delay as the clock adjust in the CLK_CNTL register. The timing parameters listed in the table assume that these two parameters have been set to the same adjustment value. See the *MPC8555E PowerQUICC™ III Integrated Communications Processor Reference Manual* for a description and understanding of the timing modifications enabled by use of these bits.
6. Determined by maximum possible skew between a data strobe (MDQS) and any corresponding bit of data (MDQ), ECC (MECC), or data mask (MDM). The data strobe should be centered inside of the data eye at the pins of the MPC8555E.
7. All outputs are referenced to the rising edge of MCK(n) at the pins of the MPC8555E. Note that t_{DDKHMP} follows the symbol conventions described in note 1.

Figure 4 shows the DDR SDRAM output timing for address skew with respect to any MCK.

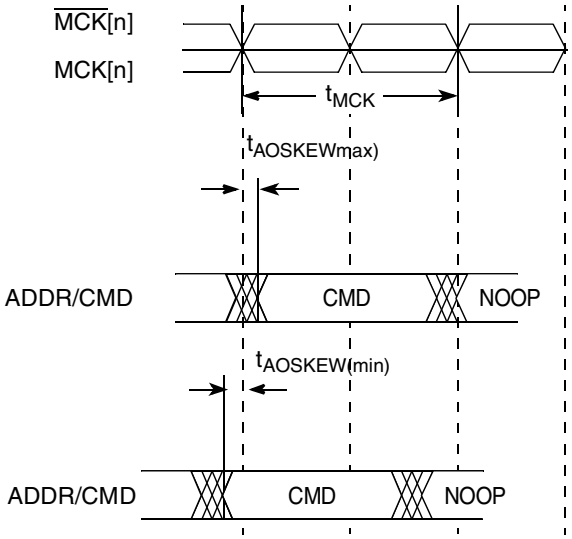

Figure 4. Timing Diagram for t_{AOSKEW} Measurement

Figure 5 shows the DDR SDRAM output timing diagram for the source synchronous mode.

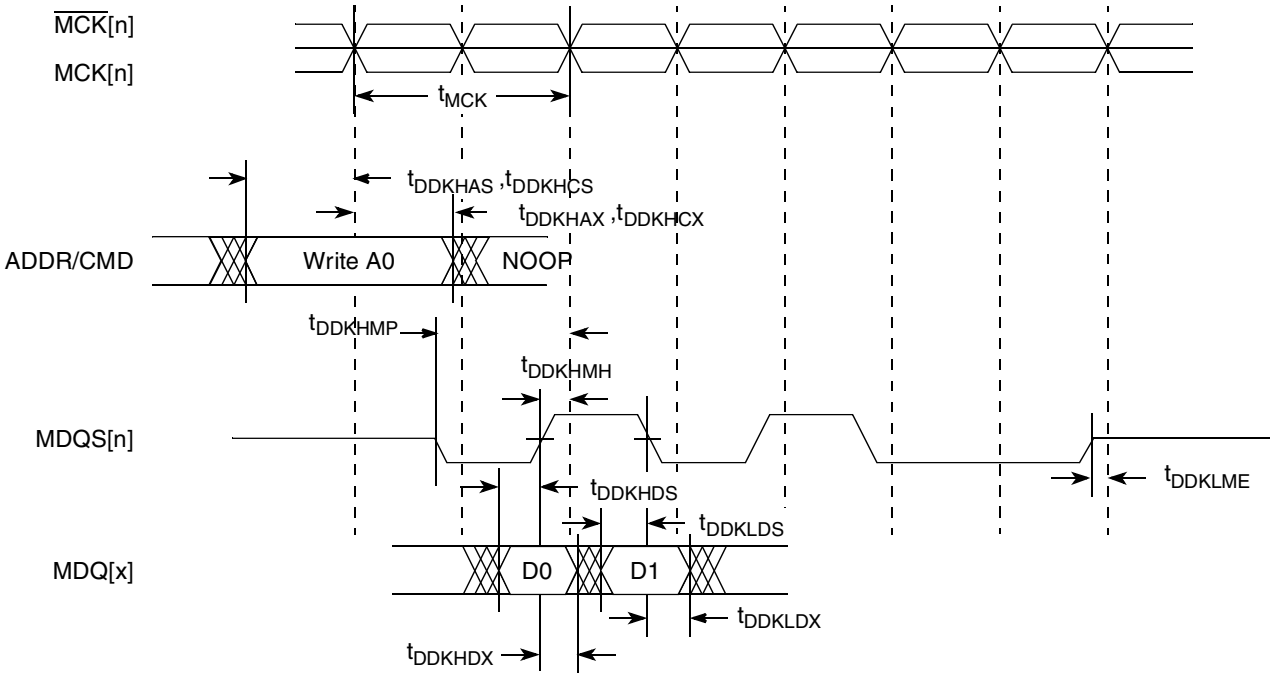

Figure 5. DDR SDRAM Output Timing Diagram for Source Synchronous Mode

Figure 6 provides the AC test load for the DDR bus.

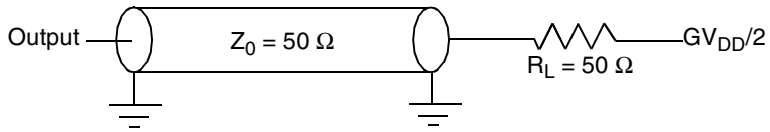

Figure 6. DDR AC Test Load

Table 15. DDR SDRAM Measurement Conditions

Symbol	DDR	Unit	Notes
V_{TH}	MV_{REF} ± 0.31 V	V	1
V_{OUT}	0.5 × GV_{DD}	V	2

Notes:
1. Data input threshold measurement point.
2. Data output measurement point.

7 DUART

This section describes the DC and AC electrical specifications for the DUART interface of the MPC8555E.

7.1 DUART DC Electrical Characteristics

Table 16 provides the DC electrical characteristics for the DUART interface of the MPC8555E.

Table 16. DUART DC Electrical Characteristics

Parameter	Symbol	Test Condition	Min	Max	Unit
High-level input voltage	V_{IH}	$V_{OUT} \geq V_{OH}$ (min) or	2	OV_{DD} + 0.3	V
Low-level input voltage	V_{IL}	$V_{OUT} \leq V_{OL}$ (max)	–0.3	0.8	V
Input current	I_{IN}	V_{IN} [1] = 0 V or V_{IN} = V_{DD}	—	±5	μA
High-level output voltage	V_{OH}	OV_{DD} = min, I_{OH} = –100 μA	OV_{DD} – 0.2	—	V
Low-level output voltage	V_{OL}	OV_{DD} = min, I_{OL} = 100 μA	—	0.2	V

Note:
1. Note that the symbol V_{IN}, in this case, represents the OV_{IN} symbol referenced in Table 1 and Table 2.

7.2 DUART AC Electrical Specifications

Table 17 provides the AC timing parameters for the DUART interface of the MPC8555E.

Table 17. DUART AC Timing Specifications

Parameter	Value	Unit	Notes
Minimum baud rate	f_{CCB_CLK} / 1048576	baud	3
Maximum baud rate	f_{CCB_CLK} / 16	baud	1, 3
Oversample rate	16	—	2, 3

Notes:
1. Actual attainable baud rate is limited by the latency of interrupt processing.
2. The middle of a start bit is detected as the 8th sampled 0 after the 1-to-0 transition of the start bit. Subsequent bit values are sampled each 16th sample.
3. Guaranteed by design.

8 Ethernet: Three-Speed, MII Management

This section provides the AC and DC electrical characteristics for three-speed, 10/100/1000, and MII management.

8.1 Three-Speed Ethernet Controller (TSEC) (10/100/1000 Mbps)—GMII/MII/TBI/RGMII/RTBI Electrical Characteristics

The electrical characteristics specified here apply to all GMII (gigabit media independent interface), the MII (media independent interface), TBI (ten-bit interface), RGMII (reduced gigabit media independent interface), and RTBI (reduced ten-bit interface) signals except MDIO (management data input/output) and MDC (management data clock). The RGMII and RTBI interfaces are defined for 2.5 V, while the GMII and TBI interfaces can be operated at 3.3 V or 2.5 V. Whether the GMII, MII, or TBI interface is operated at 3.3 or 2.5 V, the timing is compliant with the IEEE 802.3 standard. The RGMII and RTBI interfaces follow the Hewlett-Packard reduced pin-count interface for Gigabit Ethernet Physical Layer Device Specification Version 1.2a (9/22/2000). The electrical characteristics for MDIO and MDC are specified in Section 8.3, “Ethernet Management Interface Electrical Characteristics.”

8.1.1 TSEC DC Electrical Characteristics

All GMII, MII, TBI, RGMII, and RTBI drivers and receivers comply with the DC parametric attributes specified in Table 18 and Table 19. The potential applied to the input of a GMII, MII, TBI, RGMII, or RTBI receiver may exceed the potential of the receiver’s power supply (for example, a GMII driver powered from a 3.6-V supply driving V_{OH} into a GMII receiver powered from a 2.5-V supply). Tolerance for dissimilar GMII driver and receiver supply potentials is implicit in these specifications. The RGMII and RTBI signals are based on a 2.5-V CMOS interface voltage as defined by JEDEC EIA/JESD8-5.

Table 18. GMII, MII, and TBI DC Electrical Characteristics

Parameter	Symbol	Conditions		Min	Max	Unit
Supply voltage 3.3 V	LV_{DD}	—		3.13	3.47	V
Output high voltage	V_{OH}	I_{OH} = –4.0 mA	LV_{DD} = Min	2.40	LV_{DD} + 0.3	V
Output low voltage	V_{OL}	I_{OL} = 4.0 mA	LV_{DD} = Min	GND	0.50	V
Input high voltage	V_{IH}	—	—	1.70	LV_{DD} + 0.3	V
Input low voltage	V_{IL}	—	—	–0.3	0.90	V
Input high current	I_{IH}	V_{IN} [1] = LV_{DD}		—	40	µA
Input low current	I_{IL}	V_{IN} [1] = GND		–600	—	µA

Note:
1. The symbol V_{IN}, in this case, represents the LV_{IN} symbol referenced in Table 1 and Table 2.

Table 19. GMII, MII, RGMII RTBI, and TBI DC Electrical Characteristics

Parameters	Symbol	Min	Max	Unit
Supply voltage 2.5 V	LV_{DD}	2.37	2.63	V
Output high voltage (LV_{DD} = Min, I_{OH} = –1.0 mA)	V_{OH}	2.00	LV_{DD} + 0.3	V
Output low voltage (LV_{DD} = Min, I_{OL} = 1.0 mA)	V_{OL}	GND – 0.3	0.40	V
Input high voltage (LV_{DD} = Min)	V_{IH}	1.70	LV_{DD} + 0.3	V
Input low voltage (LV_{DD} = Min)	V_{IL}	–0.3	0.70	V
Input high current (V_{IN} [1] = LV_{DD})	I_{IH}	—	10	µA
Input low current (V_{IN} [1] = GND)	I_{IL}	–15	—	µA

Note:
1. Note that the symbol V_{IN}, in this case, represents the LV_{IN} symbol referenced in Table 1and Table 2.

8.2 GMII, MII, TBI, RGMII, and RTBI AC Timing Specifications

The AC timing specifications for GMII, MII, TBI, RGMII, and RTBI are presented in this section.

8.2.1 GMII AC Timing Specifications

This section describes the GMII transmit and receive AC timing specifications.

8.2.2 GMII Transmit AC Timing Specifications

Table 20 provides the GMII transmit AC timing specifications.

Table 20. GMII Transmit AC Timing Specifications

At recommended operating conditions with LV_{DD} of 3.3 V ± 5%.

Parameter/Condition	Symbol [1]	Min	Typ	Max	Unit
GTX_CLK clock period	t_{GTX}	—	8.0	—	ns
GTX_CLK duty cycle	t_{GTXH}/t_{GTX}	40	—	60	%
GMII data TXD[7:0], TX_ER, TX_EN setup time	t_{GTKHDV}	2.5	—	—	ns
GTX_CLK to GMII data TXD[7:0], TX_ER, TX_EN delay	t_{GTKHDX}	0.5	—	5.0	ns
GTX_CLK data clock rise and fall times	t_{GTXR}[3], t_{GTXR}[2,4]	—	—	1.0	ns

Notes:

1. The symbols used for timing specifications herein follow the pattern $t_{\text{(first two letters of functional block)(signal)(state) (reference)(state)}}$ for inputs and $t_{\text{(first two letters of functional block)(reference)(state)(signal)(state)}}$ for outputs. For example, t_{GTKHDV} symbolizes GMII transmit timing (GT) with respect to the t_{GTX} clock reference (K) going to the high state (H) relative to the time date input signals (D) reaching the valid state (V) to state or setup time. Also, t_{GTKHDX} symbolizes GMII transmit timing (GT) with respect to the t_{GTX} clock reference (K) going to the high state (H) relative to the time date input signals (D) going invalid (X) or hold time. Note that, in general, the clock reference symbol representation is based on three letters representing the clock of a particular functional. For example, the subscript of t_{GTX} represents the GMII(G) transmit (TX) clock. For rise and fall times, the latter convention is used with the appropriate letter: R (rise) or F (fall).
2. Signal timings are measured at 0.7 V and 1.9 V voltage levels.
3. Guaranteed by characterization.
4. Guaranteed by design.

Figure 7 shows the GMII transmit AC timing diagram.

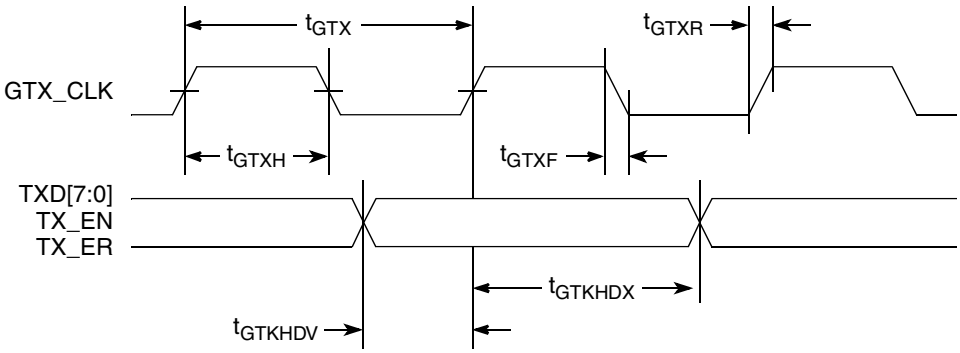

Figure 7. GMII Transmit AC Timing Diagram

8.2.2.1 GMII Receive AC Timing Specifications

Table 21 provides the GMII receive AC timing specifications.

Table 21. GMII Receive AC Timing Specifications

At recommended operating conditions with LV_{DD} of 3.3 V ± 5%.

Parameter/Condition	Symbol [1]	Min	Typ	Max	Unit
RX_CLK clock period	t_{GRX}	—	8.0	—	ns
RX_CLK duty cycle	t_{GRXH}/t_{GRX}	40	—	60	%
RXD[7:0], RX_DV, RX_ER setup time to RX_CLK	t_{GRDVKH}	2.0	—	—	ns
RXD[7:0], RX_DV, RX_ER hold time to RX_CLK	t_{GRDXKH}	0.5	—	—	ns
RX_CLK clock rise and fall time	t_{GRXR}, t_{GRXF} [2,3]	—	—	1.0	ns

Note:

1. The symbols used for timing specifications herein follow the pattern of $t_{\text{(first two letters of functional block)(signal)(state)(reference)(state)}}$ for inputs and $t_{\text{(first two letters of functional block)(reference)(state)(signal)(state)}}$ for outputs. For example, t_{GRDVKH} symbolizes GMII receive timing (GR) with respect to the time data input signals (D) reaching the valid state (V) relative to the t_{RX} clock reference (K) going to the high state (H) or setup time. Also, t_{GRDXKL} symbolizes GMII receive timing (GR) with respect to the time data input signals (D) went invalid (X) relative to the t_{GRX} clock reference (K) going to the low (L) state or hold time. Note that, in general, the clock reference symbol representation is based on three letters representing the clock of a particular functional. For example, the subscript of t_{GRX} represents the GMII (G) receive (RX) clock. For rise and fall times, the latter convention is used with the appropriate letter: R (rise) or F (fall).
2. Signal timings are measured at 0.7 V and 1.9 V voltage levels.
3. Guaranteed by design.

Figure 8 provides the AC test load for TSEC.

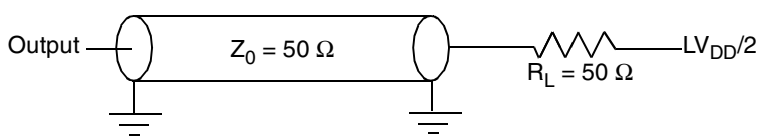

Figure 8. TSEC AC Test Load

Figure 9 shows the GMII receive AC timing diagram.

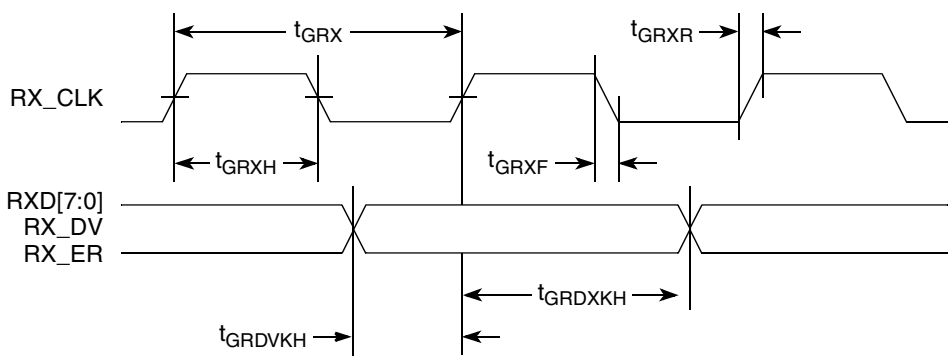

Figure 9. GMII Receive AC Timing Diagram

8.2.3 MII AC Timing Specifications

This section describes the MII transmit and receive AC timing specifications.

8.2.3.1 MII Transmit AC Timing Specifications

Table 22 provides the MII transmit AC timing specifications.

Table 22. MII Transmit AC Timing Specifications

At recommended operating conditions with LV_{DD} of 3.3 V ± 5%.

Parameter/Condition	Symbol [1]	Min	Typ	Max	Unit
TX_CLK clock period 10 Mbps	t_{MTX} [2]	—	400	—	ns
TX_CLK clock period 100 Mbps	t_{MTX}	—	40	—	ns
TX_CLK duty cycle	t_{MTXH}/t_{MTX}	35	—	65	%
TX_CLK to MII data TXD[3:0], TX_ER, TX_EN delay	t_{MTKHDX}	1	5	15	ns
TX_CLK data clock rise and fall time	t_{MTXR}, t_{MTXF} [2,3]	1.0	—	4.0	ns

Notes:

1. The symbols used for timing specifications herein follow the pattern of $t_{\text{(first two letters of functional block)(signal)(state)(reference)(state)}}$ for inputs and $t_{\text{(first two letters of functional block)(reference)(state)(signal)(state)}}$ for outputs. For example, t_{MTKHDX} symbolizes MII transmit timing (MT) for the time t_{MTX} clock reference (K) going high (H) until data outputs (D) are invalid (X). Note that, in general, the clock reference symbol representation is based on two to three letters representing the clock of a particular functional. For example, the subscript of t_{MTX} represents the MII(M) transmit (TX) clock. For rise and fall times, the latter convention is used with the appropriate letter: R (rise) or F (fall).
2. Signal timings are measured at 0.7 V and 1.9 V voltage levels.
3. Guaranteed by design.

Figure 10 shows the MII transmit AC timing diagram.

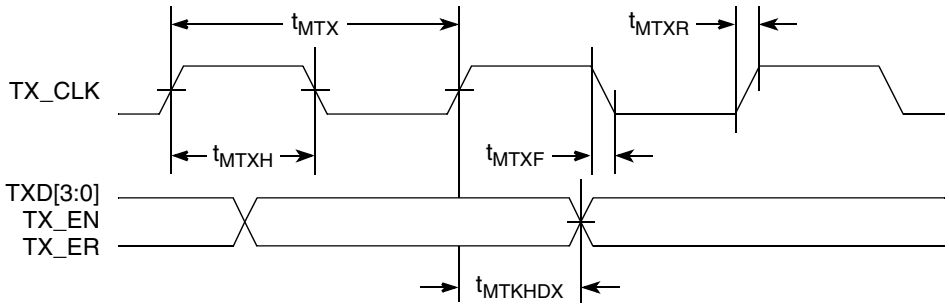

Figure 10. MII Transmit AC Timing Diagram

8.2.3.2 MII Receive AC Timing Specifications

Table 23 provides the MII receive AC timing specifications.

Table 23. MII Receive AC Timing Specifications

At recommended operating conditions with LV_{DD} of 3.3 V ± 5%.

Parameter/Condition	Symbol [1]	Min	Typ	Max	Unit
RX_CLK clock period 10 Mbps	t_{MRX} [2]	—	400	—	ns
RX_CLK clock period 100 Mbps	t_{MRX}	—	40	—	ns
RX_CLK duty cycle	t_{MRXH}/t_{MRX}	35	—	65	%
RXD[3:0], RX_DV, RX_ER setup time to RX_CLK	t_{MRDVKH}	10.0	—	—	ns
RXD[3:0], RX_DV, RX_ER hold time to RX_CLK	t_{MRDXKH}	10.0	—	—	ns
RX_CLK clock rise and fall time	t_{MRXR}, t_{MRXF} [2,3]	1.0	—	4.0	ns

Notes:

1. The symbols used for timing specifications herein follow the pattern of $t_{\text{(first two letters of functional block)(signal)(state) (reference)(state)}}$ for inputs and $t_{\text{(first two letters of functional block)(reference)(state)(signal)(state)}}$ for outputs. For example, t_{MRDVKH} symbolizes MII receive timing (MR) with respect to the time data input signals (D) reach the valid state (V) relative to the t_{MRX} clock reference (K) going to the high (H) state or setup time. Also, t_{MRDXKL} symbolizes MII receive timing (GR) with respect to the time data input signals (D) went invalid (X) relative to the t_{MRX} clock reference (K) going to the low (L) state or hold time. Note that, in general, the clock reference symbol representation is based on three letters representing the clock of a particular functional. For example, the subscript of t_{MRX} represents the MII (M) receive (RX) clock. For rise and fall times, the latter convention is used with the appropriate letter: R (rise) or F (fall).
2. Signal timings are measured at 0.7 V and 1.9 V voltage levels.
3. Guaranteed by design.

Figure 11 shows the MII receive AC timing diagram.

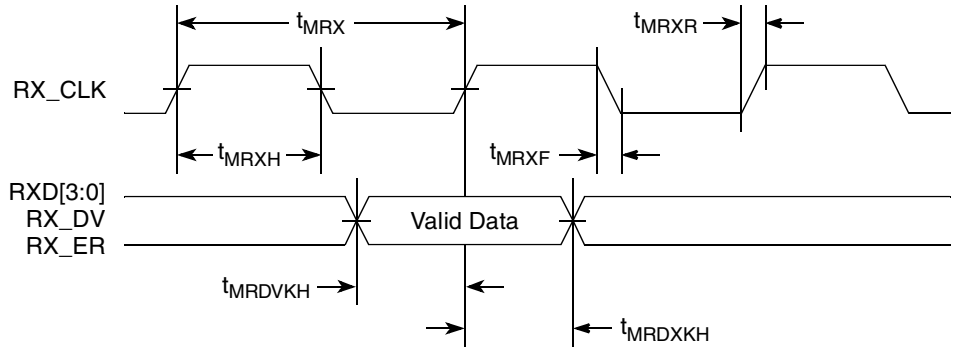

Figure 11. MII Receive AC Timing Diagram

8.2.4 TBI AC Timing Specifications

This section describes the TBI transmit and receive AC timing specifications.

8.2.4.1 TBI Transmit AC Timing Specifications

Table 24 provides the MII transmit AC timing specifications.

Table 24. TBI Transmit AC Timing Specifications

At recommended operating conditions with LV_{DD} of 3.3 V ± 5%.

Parameter/Condition	Symbol [1]	Min	Typ	Max	Unit
GTX_CLK clock period	t_{TTX}	—	8.0	—	ns
GTX_CLK duty cycle	t_{TTXH}/t_{TTX}	40	—	60	%
GMII data TCG[9:0], TX_ER, TX_EN setup time GTX_CLK going high	t_{TTKHDV}	2.0	—	—	ns
GMII data TCG[9:0], TX_ER, TX_EN hold time from GTX_CLK going high	t_{TTKHDX}	1.0	—	—	ns
GTX_CLK clock rise and fall time	t_{TTXR}, t_{TTXF} [2,3]	—	—	1.0	ns

Notes:

1. The symbols used for timing specifications herein follow the pattern of $t_{\text{(first two letters of functional block)(signal)(state)(reference)(state)}}$ for inputs and $t_{\text{(first two letters of functional block)(reference)(state)(signal)(state)}}$ for outputs. For example, t_{TTKHDV} symbolizes the TBI transmit timing (TT) with respect to the time from t_{TTX} (K) going high (H) until the referenced data signals (D) reach the valid state (V) or setup time. Also, t_{TTKHDX} symbolizes the TBI transmit timing (TT) with respect to the time from t_{TTX} (K) going high (H) until the referenced data signals (D) reach the invalid state (X) or hold time. Note that, in general, the clock reference symbol representation is based on three letters representing the clock of a particular functional. For example, the subscript of t_{TTX} represents the TBI (T) transmit (TX) clock. For rise and fall times, the latter convention is used with the appropriate letter: R (rise) or F (fall).
2. Signal timings are measured at 0.7 V and 1.9 V voltage levels.
3. Guaranteed by design.

Figure 12 shows the TBI transmit AC timing diagram.

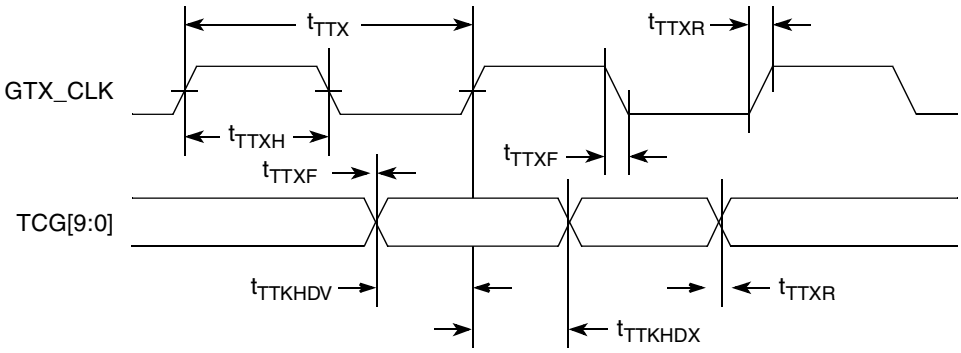

Figure 12. TBI Transmit AC Timing Diagram

8.2.4.2 TBI Receive AC Timing Specifications

Table 25 provides the TBI receive AC timing specifications.

Table 25. TBI Receive AC Timing Specifications

At recommended operating conditions with LV_{DD} of 3.3 V ± 5%.

Parameter/Condition	Symbol [1]	Min	Typ	Max	Unit
RX_CLK clock period	t_{TRX}		16.0		ns
RX_CLK skew	t_{SKTRX}	7.5	—	8.5	ns
RX_CLK duty cycle	t_{TRXH}/t_{TRX}	40	—	60	%
RCG[9:0] setup time to rising RX_CLK	t_{TRDVKH}	2.5	—	—	ns
RCG[9:0] hold time to rising RX_CLK	t_{TRDXKH}	1.5	—	—	ns
RX_CLK clock rise time and fall time	t_{TRXR}, t_{TRXF} [2,3]	0.7	—	2.4	ns

Note:

1. The symbols used for timing specifications herein follow the pattern of $t_{\text{(first two letters of functional block)(signal)(state)(reference)(state)}}$ for inputs and $t_{\text{(first two letters of functional block)(reference)(state)(signal)(state)}}$ for outputs. For example, t_{TRDVKH} symbolizes TBI receive timing (TR) with respect to the time data input signals (D) reach the valid state (V) relative to the t_{TRX} clock reference (K) going to the high (H) state or setup time. Also, t_{TRDXKH} symbolizes TBI receive timing (TR) with respect to the time data input signals (D) went invalid (X) relative to the t_{TRX} clock reference (K) going to the high (H) state. Note that, in general, the clock reference symbol representation is based on three letters representing the clock of a particular functional. For example, the subscript of t_{TRX} represents the TBI (T) receive (RX) clock. For rise and fall times, the latter convention is used with the appropriate letter: R (rise) or F (fall). For symbols representing skews, the subscript is skew (SK) followed by the clock that is being skewed (TRX).
2. Guaranteed by design.

Figure 13 shows the TBI receive AC timing diagram.

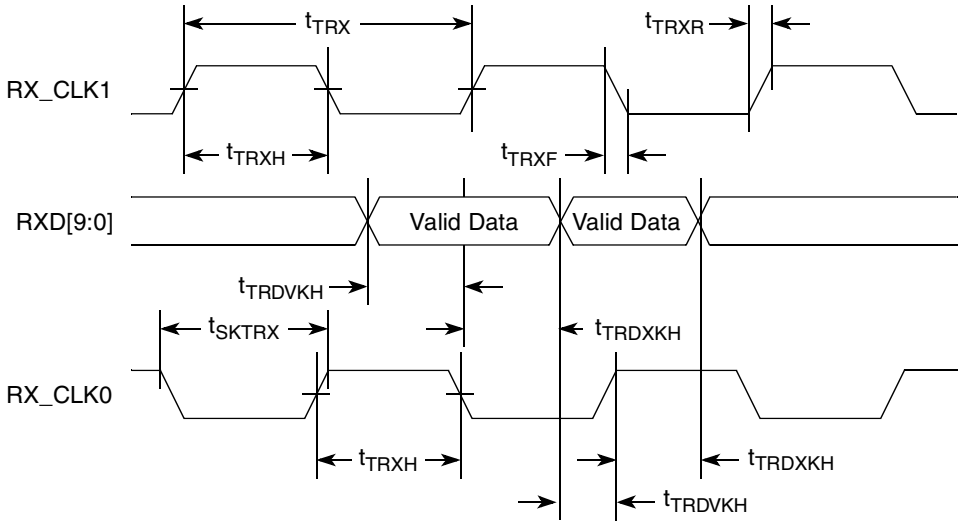

Figure 13. TBI Receive AC Timing Diagram

8.2.5 RGMII and RTBI AC Timing Specifications

Table 26 presents the RGMII and RTBI AC timing specifications.

Table 26. RGMII and RTBI AC Timing Specifications

At recommended operating conditions with LV_{DD} of 2.5 V ± 5%.

Parameter/Condition	Symbol [1]	Min	Typ	Max	Unit
Data to clock output skew (at transmitter)	t_{SKRGT} [5]	–500	0	500	ps
Data to clock input skew (at receiver) [2]	t_{SKRGT}	1.0	—	2.8	ns
Clock cycle duration [3]	t_{RGT} [6]	7.2	8.0	8.8	ns
Duty cycle for 1000Base-T [4]	t_{RGTH}/t_{RGT} [6]	45	50	55	%
Duty cycle for 10BASE-T and 100BASE-TX [3]	t_{RGTH}/t_{RGT} [6]	40	50	60	%
Rise and fall times	t_{RGTR} [6,7], t_{RGTF} [6,7]	—	—	0.75	ns

Notes:

1. Note that, in general, the clock reference symbol representation for this section is based on the symbols RGT to represent RGMII and RTBI timing. For example, the subscript of t_{RGT} represents the TBI (T) receive (RX) clock. Note also that the notation for rise (R) and fall (F) times follows the clock symbol that is being represented. For symbols representing skews, the subscript is skew (SK) followed by the clock that is being skewed (RGT).
2. The RGMII specification requires that PC board designer add 1.5 ns or greater in trace delay to the RX_CLK in order to meet this specification. However, as stated above, this device functions with only 1.0 ns of delay.
3. For 10 and 100 Mbps, t_{RGT} scales to 400 ns ± 40 ns and 40 ns ± 4 ns, respectively.
4. Duty cycle may be stretched/shrunk during speed changes or while transitioning to a received packet's clock domains as long as the minimum duty cycle is not violated and stretching occurs for no more than three t_{RGT} of the lowest speed transitioned between.
5. Guaranteed by characterization.
6. Guaranteed by design.
7. Signal timings are measured at 0.5 and 2.0 V voltage levels.

Figure 14 shows the RBMII and RTBI AC timing and multiplexing diagrams.

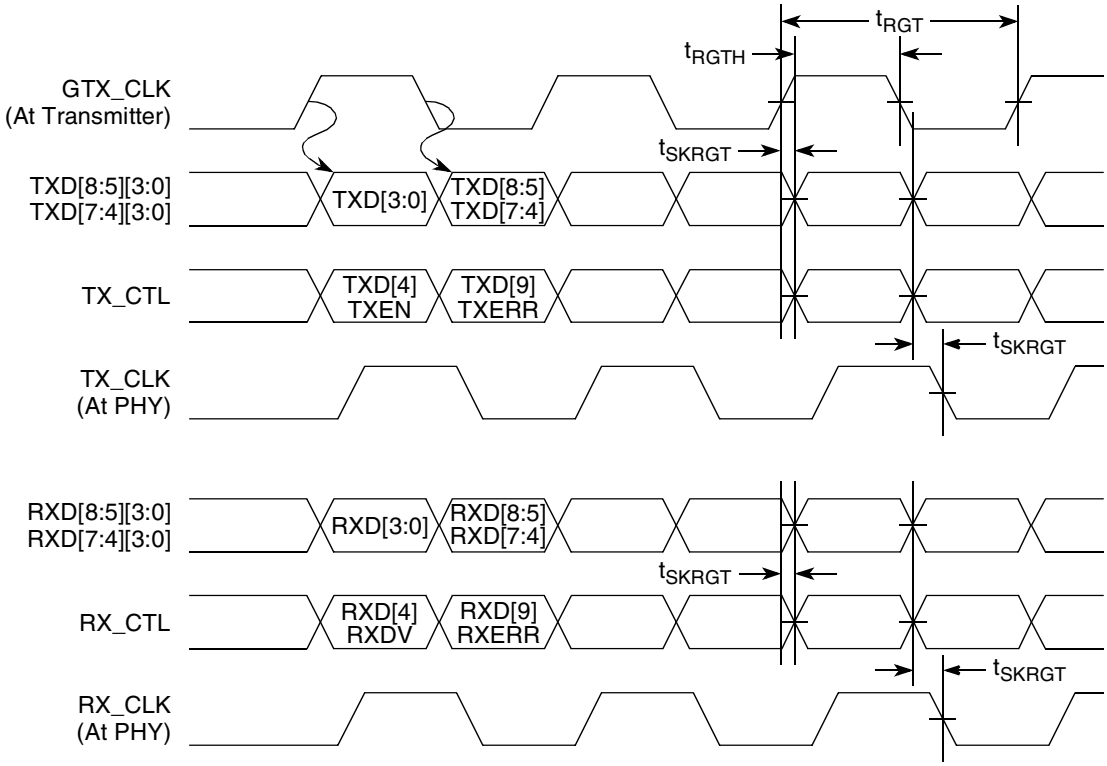

Figure 14. RGMII and RTBI AC Timing and Multiplexing Diagrams

8.3 Ethernet Management Interface Electrical Characteristics

The electrical characteristics specified here apply to MII management interface signals MDIO (management data input/output) and MDC (management data clock). The electrical characteristics for GMII, RGMII, TBI and RTBI are specified in Section 8.1, "Three-Speed Ethernet Controller (TSEC) (10/100/1000 Mbps)—GMII/MII/TBI/RGMII/RTBI Electrical Characteristics."

8.3.1 MII Management DC Electrical Characteristics

The MDC and MDIO are defined to operate at a supply voltage of 3.3 V. The DC electrical characteristics for MDIO and MDC are provided in Table 27.

Table 27. MII Management DC Electrical Characteristics

Parameter	Symbol	Conditions		Min	Max	Unit
Supply voltage (3.3 V)	OV_{DD}	—		3.13	3.47	V
Output high voltage	V_{OH}	I_{OH} = –1.0 mA	LV_{DD} = Min	2.10	LV_{DD} + 0.3	V
Output low voltage	V_{OL}	I_{OL} = 1.0 mA	LV_{DD} = Min	GND	0.50	V
Input high voltage	V_{IH}	—		1.70	—	V
Input low voltage	V_{IL}	—		—	0.90	V

Table 27. MII Management DC Electrical Characteristics (continued)

Parameter	Symbol	Conditions		Min	Max	Unit
Input high current	I_{IH}	LV_{DD} = Max	V_{IN} [1] = 2.1 V	—	40	µA
Input low current	I_{IL}	LV_{DD} = Max	V_{IN} = 0.5 V	–600	—	µA

Note:
1. Note that the symbol V_{IN}, in this case, represents the OV_{IN} symbol referenced in Table 1 and Table 2.

8.3.2 MII Management AC Electrical Specifications

Table 28 provides the MII management AC timing specifications.

Table 28. MII Management AC Timing Specifications

At recommended operating conditions with LV_{DD} is 3.3 V ± 5%.

Parameter/Condition	Symbol [1]	Min	Typ	Max	Unit	Notes
MDC frequency	f_{MDC}	0.893	—	10.4	MHz	2
MDC period	t_{MDC}	96	—	1120	ns	
MDC clock pulse width high	t_{MDCH}	32	—	—	ns	
MDC to MDIO valid	t_{MDKHDV}			$2*[1/(f_{ccb_clk}/8)]$	ns	3
MDC to MDIO delay	t_{MDKHDX}	10	—	$2*[1/(f_{ccb_clk}/8)]$	ns	3
MDIO to MDC setup time	t_{MDDVKH}	5	—	—	ns	
MDIO to MDC hold time	t_{MDDXKH}	0	—	—	ns	
MDC rise time	t_{MDCR}	—	—	10	ns	
MDC fall time	t_{MDHF}	—	—	10	ns	

Notes:
1. The symbols used for timing specifications herein follow the pattern of $t_{\text{(first two letters of functional block)(signal)(state)(reference)(state)}}$ for inputs and $t_{\text{(first two letters of functional block)(reference)(state)(signal)(state)}}$ for outputs. For example, t_{MDKHDX} symbolizes management data timing (MD) for the time t_{MDC} from clock reference (K) high (H) until data outputs (D) are invalid (X) or data hold time. Also, t_{MDDVKH} symbolizes management data timing (MD) with respect to the time data input signals (D) reach the valid state (V) relative to the t_{MDC} clock reference (K) going to the high (H) state or setup time. For rise and fall times, the latter convention is used with the appropriate letter: R (rise) or F (fall).
2. This parameter is dependent on the system clock speed (that is, for a system clock of 267 MHz, the delay is 70 ns and for a system clock of 333 MHz, the delay is 58 ns).
3. This parameter is dependent on the CCB clock speed (that is, for a CCB clock of 267 MHz, the delay is 60 ns and for a CCB clock of 333 MHz, the delay is 48 ns).
4. Guaranteed by design.

Figure 15 shows the MII management AC timing diagram.

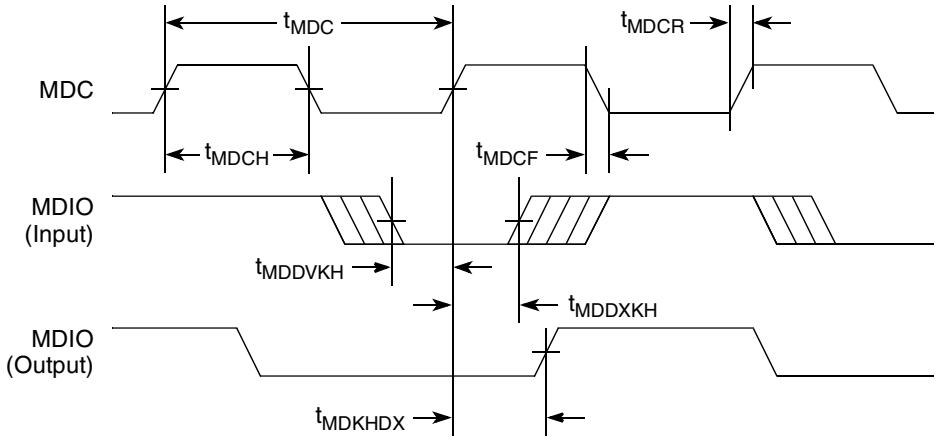

Figure 15. MII Management Interface Timing Diagram

9 Local Bus

This section describes the DC and AC electrical specifications for the local bus interface of the MPC8555E.

9.1 Local Bus DC Electrical Characteristics

Table 29 provides the DC electrical characteristics for the local bus interface.

Table 29. Local Bus DC Electrical Characteristics

Parameter	Symbol	Test Condition	Min	Max	Unit
High-level input voltage	V_{IH}	$V_{OUT} \geq V_{OH}$ (min) or	2	OV_{DD} + 0.3	V
Low-level input voltage	V_{IL}	$V_{OUT} \leq V_{OL}$ (max)	–0.3	0.8	V
Input current	I_{IN}	V_{IN} [1] = 0 V or $V_{IN} = V_{DD}$	—	±5	μA
High-level output voltage	V_{OH}	OV_{DD} = min, I_{OH} = –2mA	OV_{DD} –0.2	—	V
Low-level output voltage	V_{OL}	OV_{DD} = min, I_{OL} = 2mA	—	0.2	V

Note:
1. Note that the symbol V_{IN}, in this case, represents the OV_{IN} symbol referenced in Table 1 and Table 2.

9.2 Local Bus AC Electrical Specifications

Table 30 describes the general timing parameters of the local bus interface of the MPC8555E with the DLL enabled.

Table 30. Local Bus General Timing Parameters—DLL Enabled

Parameter	Configuration [7]	Symbol [1]	Min	Max	Unit	Notes
Local bus cycle time		t_{LBK}	6.0	—	ns	2
LCLK[n] skew to LCLK[m] or LSYNC_OUT		$t_{LBKSKEW}$	—	150	ps	7, 9
Input setup to local bus clock (except LUPWAIT)		$t_{LBIVKH1}$	1.8	—	ns	3, 4, 8
LUPWAIT input setup to local bus clock		$t_{LBIVKH2}$	1.7	—	ns	3, 4
Input hold from local bus clock (except LUPWAIT)		$t_{LBIXKH1}$	0.5	—	ns	3, 4, 8
LUPWAIT input hold from local bus clock		$t_{LBIXKH2}$	1.0	—	ns	3, 4
LALE output transition to LAD/LDP output transition (LATCH hold time)		t_{LBOTOT}	1.5	—	ns	6
Local bus clock to output valid (except LAD/LDP and LALE)	$\overline{LWE[0:1]}$ = 00	$t_{LBKHOV1}$	—	2.3	ns	3, 8
	$\overline{LWE[0:1]}$ = 11 (default)			3.8		
Local bus clock to data valid for LAD/LDP	$\overline{LWE[0:1]}$ = 00	$t_{LBKHOV2}$	—	2.5	ns	3, 8
	$\overline{LWE[0:1]}$ = 11 (default)			4.0		
Local bus clock to address valid for LAD	$\overline{LWE[0:1]}$ = 00	$t_{LBKHOV3}$	—	2.6	ns	3, 8
	$\overline{LWE[0:1]}$ = 11 (default)			4.1		
Output hold from local bus clock (except LAD/LDP and LALE)	$\overline{LWE[0:1]}$ = 00	$t_{LBKHOX1}$	0.7	—	ns	3, 8
	$\overline{LWE[0:1]}$ = 11 (default)		1.6			
Output hold from local bus clock for LAD/LDP	$\overline{LWE[0:1]}$ = 00	$t_{LBKHOX2}$	0.7	—	ns	3, 8
	$\overline{LWE[0:1]}$ = 11 (default)		1.6			
Local bus clock to output high Impedance (except LAD/LDP and LALE)	$\overline{LWE[0:1]}$ = 00	$t_{LBKHOZ1}$	—	2.8	ns	5, 9
	$\overline{LWE[0:1]}$ = 11 (default)			4.2		

Table 30. Local Bus General Timing Parameters—DLL Enabled (continued)

Parameter	Configuration [7]	Symbol [1]	Min	Max	Unit	Notes
Local bus clock to output high impedance for LAD/LDP	$\overline{\text{LWE[0:1]}}$ = 00	$t_{LBKHOZ2}$	—	2.8	ns	5, 9
	$\overline{\text{LWE[0:1]}}$ = 11 (default)			4.2		

Notes:
1. The symbols used for timing specifications herein follow the pattern of $t_{\text{(First two letters of functional block)(signal)(state)(reference)(state)}}$ for inputs and $t_{\text{(First two letters of functional block)(reference)(state)(signal)(state)}}$ for outputs. For example, $t_{LBIXKH1}$ symbolizes local bus timing (LB) for the input (I) to go invalid (X) with respect to the time the t_{LBK} clock reference (K) goes high (H), in this case for clock one(1). Also, t_{LBKHOX} symbolizes local bus timing (LB) for the t_{LBK} clock reference (K) to go high (H), with respect to the output (O) going invalid (X) or output hold time.
2. All timings are in reference to LSYNC_IN for DLL enabled mode.
3. All signals are measured from $OV_{DD}/2$ of the rising edge of LSYNC_IN for DLL enabled to $0.4 \times OV_{DD}$ of the signal in question for 3.3-V signaling levels.
4. Input timings are measured at the pin.
5. For purposes of active/float timing measurements, the Hi-Z or off state is defined to be when the total current delivered through the component pin is less than or equal to the leakage current specification.
6. The value of t_{LBOTOT} is defined as the sum of 1/2 or 1 ccb_clk cycle as programmed by LBCR[AHD], and the number of local bus buffer delays used as programmed at power-on reset with configuration pins $\overline{\text{LWE[0:1]}}$.
7. Maximum possible clock skew between a clock LCLK[m] and a relative clock LCLK[n]. Skew measured between complementary signals at $OV_{DD}/2$.
8. Guaranteed by characterization.
9. Guaranteed by design.

Table 31 describes the general timing parameters of the local bus interface of the MPC8555E with the DLL bypassed.

Table 31. Local Bus General Timing Parameters—DLL Bypassed

Parameter	Configuration [7]	Symbol [1]	Min	Max	Unit	Notes
Local bus cycle time		t_{LBK}	6.0	—	ns	2
Internal launch/capture clock to LCLK delay		t_{LBKHKT}	1.8	3.4	ns	8
LCLK[n] skew to LCLK[m] or LSYNC_OUT		$t_{LBKSKEW}$	—	150	ps	7, 9
Input setup to local bus clock (except LUPWAIT)		$t_{LBIVKH1}$	5.2	—	ns	3, 4
LUPWAIT input setup to local bus clock		$t_{LBIVKH2}$	5.1	—	ns	3, 4
Input hold from local bus clock (except LUPWAIT)		$t_{LBIXKH1}$	–1.3	—	ns	3, 4
LUPWAIT input hold from local bus clock		$t_{LBIXKH2}$	–0.8	—	ns	3, 4
LALE output transition to LAD/LDP output transition (LATCH hold time)		t_{LBOTOT}	1.5	—	ns	6
Local bus clock to output valid (except LAD/LDP and LALE)	$\overline{\text{LWE[0:1]}}$ = 00	$t_{LBKLOV1}$	—	0.5	ns	3
	$\overline{\text{LWE[0:1]}}$ = 11 (default)			2.0		
Local bus clock to data valid for LAD/LDP	$\overline{\text{LWE[0:1]}}$ = 00	$t_{LBKLOV2}$	—	0.7	ns	3
	$\overline{\text{LWE[0:1]}}$ = 11 (default)			2.2		

Table 31. Local Bus General Timing Parameters—DLL Bypassed (continued)

Parameter	Configuration [7]	Symbol [1]	Min	Max	Unit	Notes
Local bus clock to address valid for LAD	$\overline{\text{LWE[0:1]}}$ = 00	$t_{LBKLOV3}$	—	0.8	ns	3
	$\overline{\text{LWE[0:1]}}$ = 11 (default)			2.3		
Output hold from local bus clock (except LAD/LDP and LALE)	$\overline{\text{LWE[0:1]}}$ = 00	$t_{LBKLOX1}$	–2.7	—	ns	3
	$\overline{\text{LWE[0:1]}}$ = 11 (default)		–1.8			
Output hold from local bus clock for LAD/LDP	$\overline{\text{LWE[0:1]}}$ = 00	$t_{LBKLOX2}$	–2.7	—	ns	3
	$\overline{\text{LWE[0:1]}}$ = 11 (default)		–1.8			
Local bus clock to output high Impedance (except LAD/LDP and LALE)	$\overline{\text{LWE[0:1]}}$ = 00	$t_{LBKLOZ1}$	—	1.0	ns	5
	$\overline{\text{LWE[0:1]}}$ = 11 (default)			2.4		
Local bus clock to output high impedance for LAD/LDP	$\overline{\text{LWE[0:1]}}$ = 00	$t_{LBKLOZ2}$	—	1.0	ns	5
	$\overline{\text{LWE[0:1]}}$ = 11 (default)			2.4		

Notes:

1. The symbols used for timing specifications herein follow the pattern of $t_{\text{(First two letters of functional block)(signal)(state) (reference)(state)}}$ for inputs and $t_{\text{(First two letters of functional block)(reference)(state)(signal)(state)}}$ for outputs. For example, $t_{LBIXKH1}$ symbolizes local bus timing (LB) for the input (I) to go invalid (X) with respect to the time the t_{LBK} clock reference (K) goes high (H), in this case for clock one(1). Also, t_{LBKHOX} symbolizes local bus timing (LB) for the t_{LBK} clock reference (K) to go high (H), with respect to the output (O) going invalid (X) or output hold time.
2. All timings are in reference to LSYNC_IN for DLL enabled mode.
3. All signals are measured from $OV_{DD}/2$ of the rising edge of local bus clock for DLL bypass mode to $0.4 \times OV_{DD}$ of the signal in question for 3.3-V signaling levels.
4. Input timings are measured at the pin.
5. For purposes of active/float timing measurements, the Hi-Z or off state is defined to be when the total current delivered through the component pin is less than or equal to the leakage current specification.
6. The value of t_{LBOTOT} is defined as the sum of 1/2 or 1 ccb_clk cycle as programmed by LBCR[AHD], and the number of local bus buffer delays used as programmed at power-on reset with configuration pins $\overline{\text{LWE[0:1]}}$.
7. Maximum possible clock skew between a clock LCLK[m] and a relative clock LCLK[n]. Skew measured between complementary signals at $OV_{DD}/2$.
8. Guaranteed by characterization.
9. Guaranteed by design.

Figure 16 provides the AC test load for the local bus.

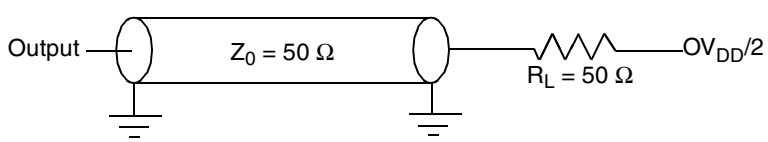

Figure 16. Local Bus C Test Load

Figure 17 to Figure 22 show the local bus signals.

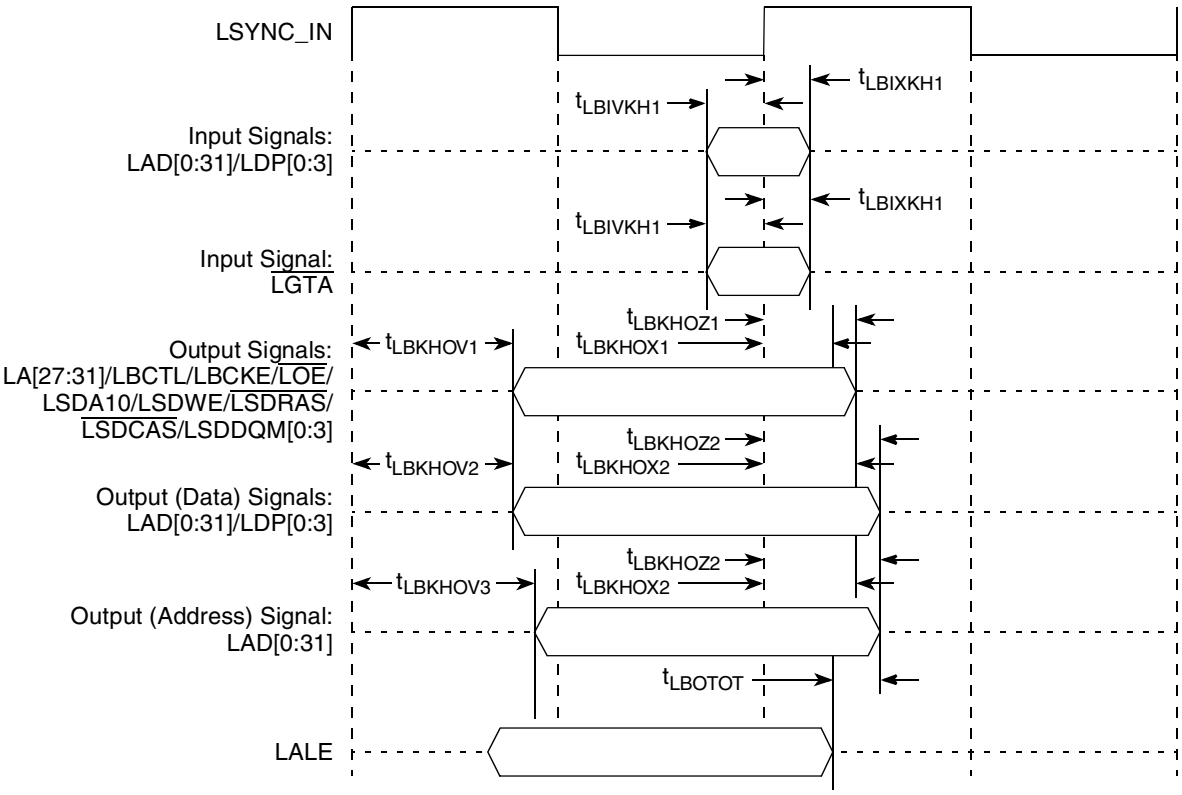

Figure 17. Local Bus Signals, Nonspecial Signals Only (DLL Enabled)

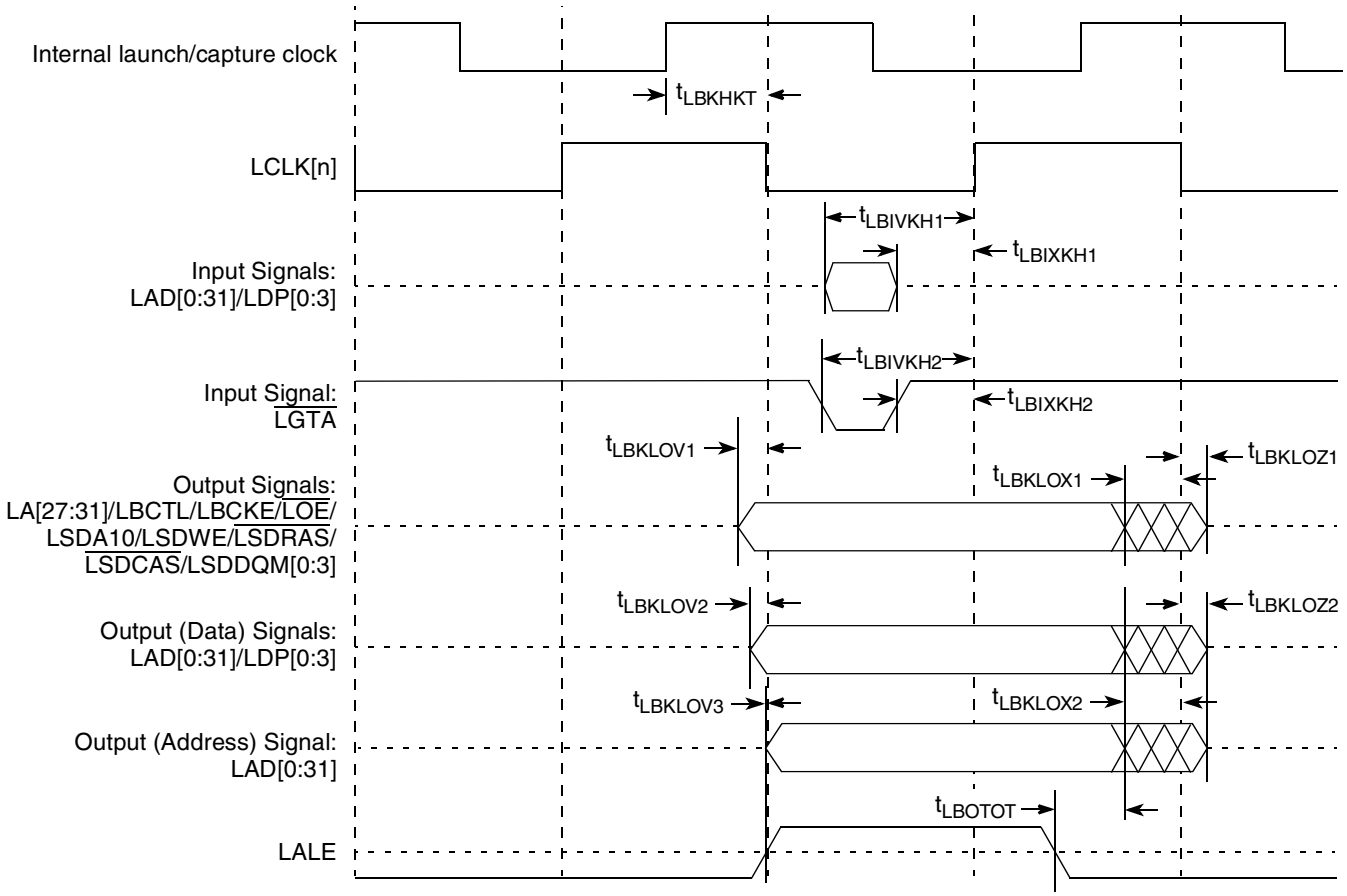

Figure 18. Local Bus Signals, Nonspecial Signals Only (DLL Bypass Mode)

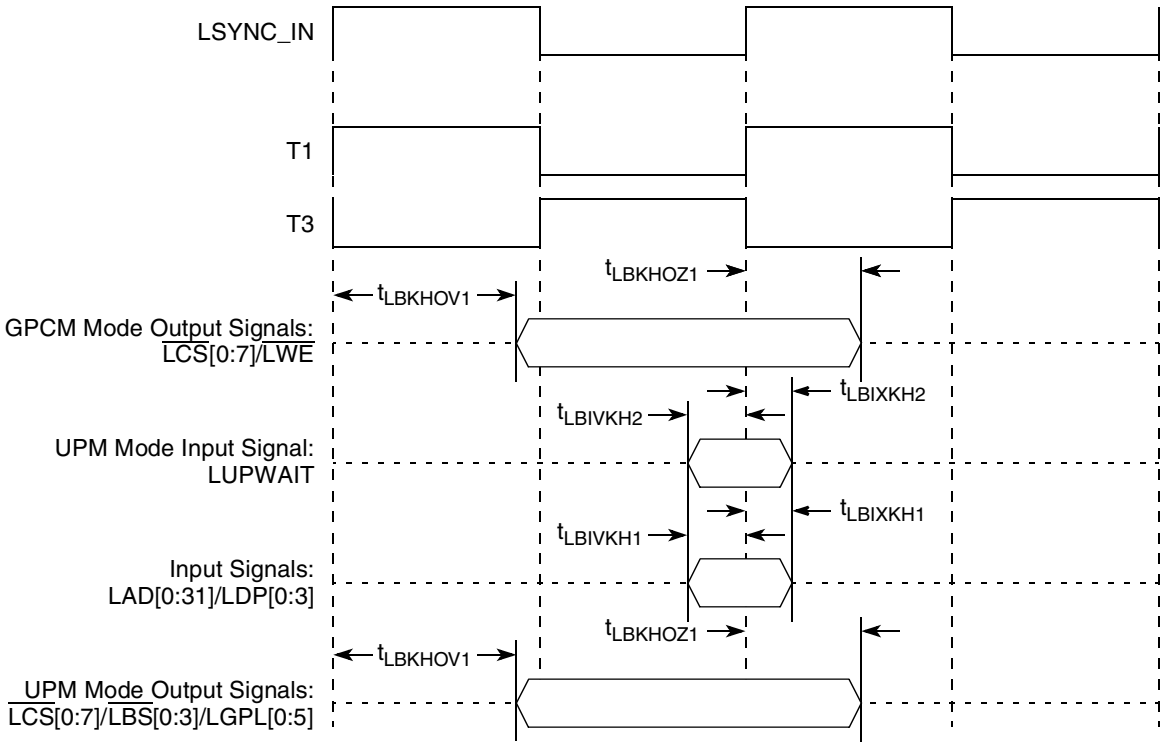

Figure 19. Local Bus Signals, GPCM/UPM Signals for LCCR[CLKDIV] = 2 (DLL Enabled)

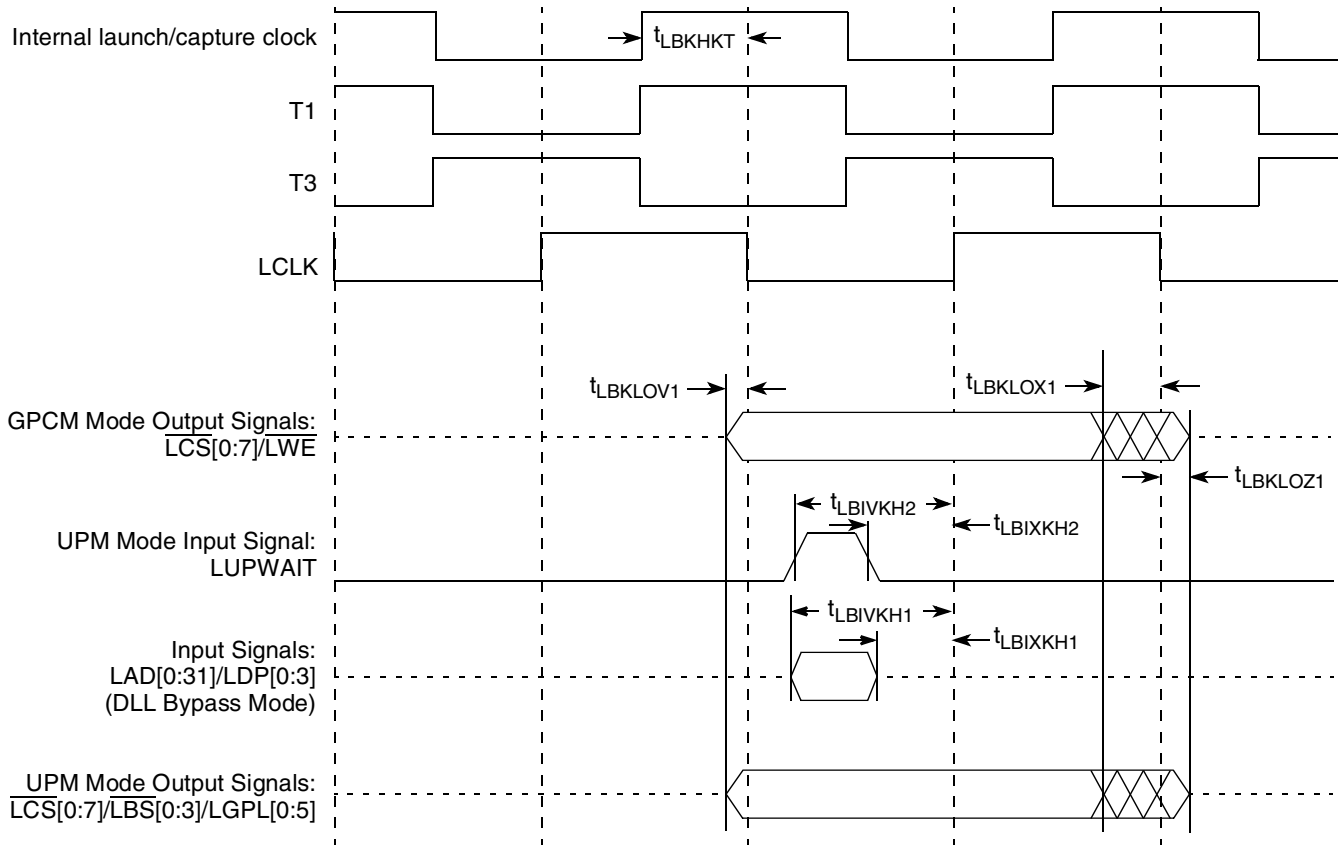

Figure 20. Local Bus Signals, GPCM/UPM Signals for LCCR[CLKDIV] = 2 (DLL Bypass Mode)

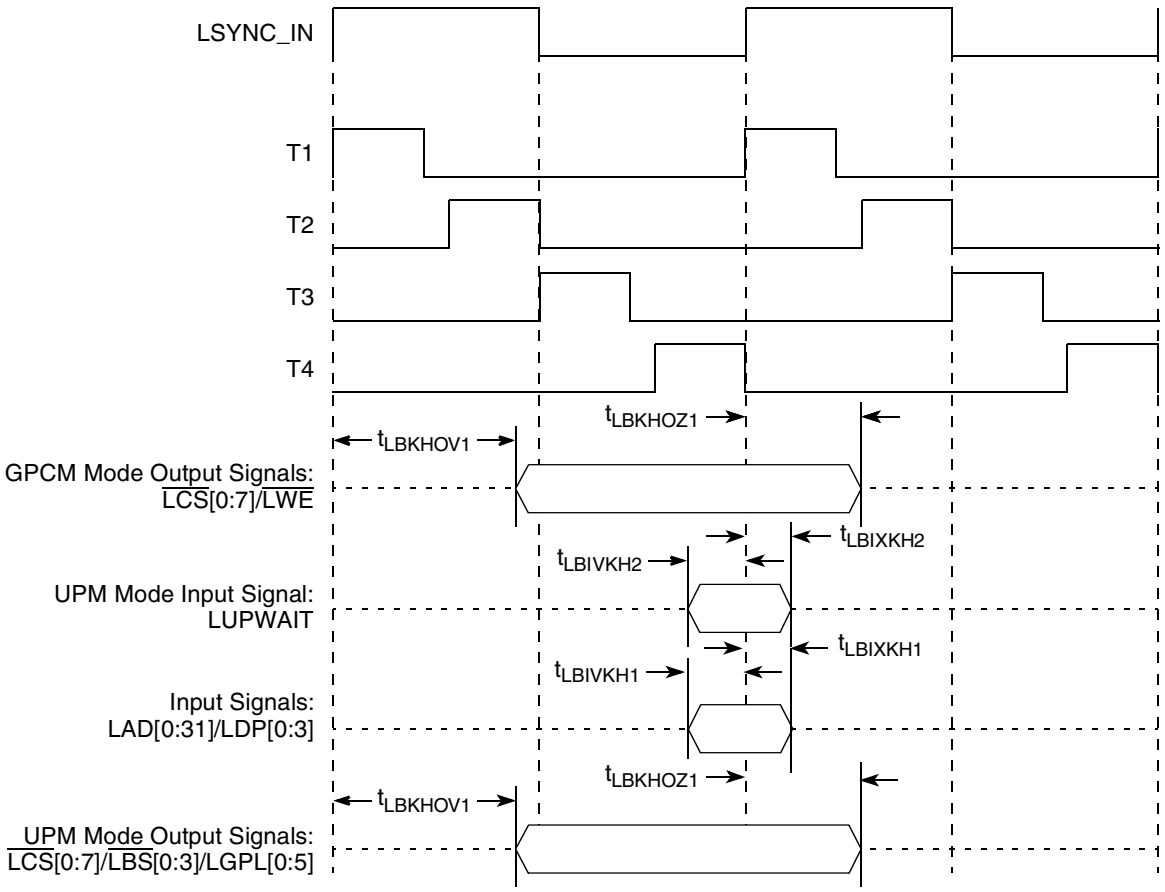

Figure 21. Local Bus Signals, GPCM/UPM Signals for LCCR[CLKDIV] = 4 or 8 (DLL Enabled)

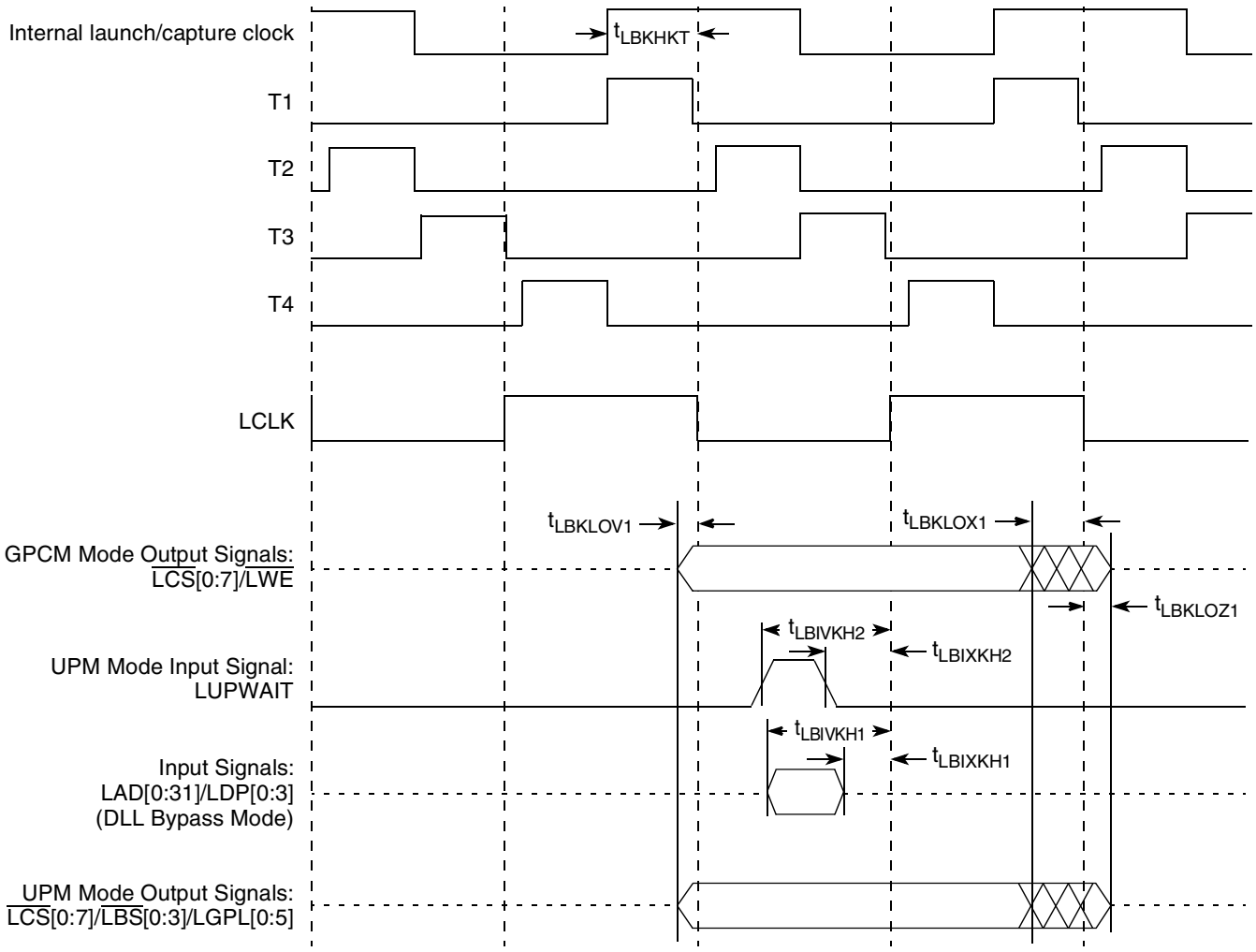

Figure 22. Local Bus Signals, GPCM/UPM Signals for LCCR[CLKDIV] = 4 or 8 (DLL Bypass Mode)

10 CPM

This section describes the DC and AC electrical specifications for the CPM of the MPC8555E.

10.1 CPM DC Electrical Characteristics

Table 32 provides the DC electrical characteristics for the CPM.

Table 32. CPM DC Electrical Characteristics

Characteristic	Symbol	Condition	Min	Max	Unit	Notes
Input high voltage	V_{IH}		2.0	3.465	V	1
Input low voltage	V_{IL}		GND	0.8	V	1, 2
Output high voltage	V_{OH}	I_{OH} = –8.0 mA	2.4	—	V	1
Output low voltage	V_{OL}	I_{OL} = 8.0 mA	—	0.5	V	1
Output high voltage	V_{OH}	I_{OH} = –2.0 mA	2.4	—	V	1
Output low voltage	V_{OL}	I_{OL} = 3.2 mA	—	0.4	V	1

Note:
1. This specification applies to the following pins: PA[0–31], PB[4–31], PC[0–31], and PD[4–31].
2. V_{IL}(max) for the IIC interface is 0.8 V rather than the 1.5 V specified in the IIC standard

10.2 CPM AC Timing Specifications

Table 33 and Table 34 provide the CPM input and output AC timing specifications, respectively.

NOTE: Rise/Fall Time on CPM Input Pins

It is recommended that the rise/fall time on CPM input pins should not exceed 5 ns. This should be enforced especially on clock signals. Rise time refers to signal transitions from 10% to 90% of VCC; fall time refers to transitions from 90% to 10% of VCC.

Table 33. CPM Input AC Timing Specifications [1]

Characteristic	Symbol [2]	Min[3]	Unit
FCC inputs—internal clock (NMSI) input setup time	t_{FIIVKH}	6	ns
FCC inputs—internal clock (NMSI) hold time	t_{FIIXKH}	0	ns
FCC inputs—external clock (NMSI) input setup time	t_{FEIVKH}	2.5	ns
FCC inputs—external clock (NMSI) hold time	t_{FEIXKH}[b]	2	ns
SCC/SMC/SPI inputs—internal clock (NMSI) input setup time	t_{NIIVKH}	6	ns
SCC/SMC/SPI inputs—internal clock (NMSI) input hold time	t_{NIIXKH}	0	ns
SCC/SMC/SPI inputs—external clock (NMSI) input setup time	t_{NEIVKH}	4	ns
SCC/SMC/SPI inputs—external clock (NMSI) input hold time	t_{NEIXKH}	2	ns
TDM inputs/SI—input setup time	t_{TDIVKH}	4	ns

Table 33. CPM Input AC Timing Specifications [1] (continued)

Characteristic	Symbol [2]	Min[3]	Unit
TDM inputs/SI—hold time	t_{TDIXKH}	3	ns
PIO inputs—input setup time	t_{PIIVKH}	8	ns
PIO inputs—input hold time	t_{PIIXKH}	1	ns
COL width high (FCC)	t_{FCCH}	1.5	CLK

Notes:
1. Input specifications are measured from the 50% level of the signal to the 50% level of the rising edge of CLKIN. Timings are measured at the pin.
2. The symbols used for timing specifications herein follow the pattern of $t_{\text{(first two letters of functional block)(signal)(state)(reference)(state)}}$ for inputs and $t_{\text{(first two letters of functional block)(reference)(state)(signal)(state)}}$ for outputs. For example, t_{FIIVKH} symbolizes the FCC inputs internal timing (FI) with respect to the time the input signals (I) reaching the valid state (V) relative to the reference clock t_{FCC} (K) going to the high (H) state or setup time. And t_{TDIXKH} symbolizes the TDM timing (TD) with respect to the time the input signals (I) reach the invalid state (X) relative to the reference clock t_{FCC} (K) going to the high (H) state or hold time.
3. PIO and TIMER inputs and outputs are asynchronous to SYSCLK or any other externally visible clock. PIO/TIMER inputs are internally synchronized to the CPM internal clock. PIO/TIMER outputs should be treated as asynchronous.

Table 34. CPM Output AC Timing Specifications [1]

Characteristic	Symbol [2]	Min	Max	Unit
FCC outputs—internal clock (NMSI) delay	t_{FIKHOX}	1	5.5	ns
FCC outputs—external clock (NMSI) delay	t_{FEKHOX}	2	8	ns
SCC/SMC/SPI outputs—internal clock (NMSI) delay	t_{NIKHOX}	0.5	10	ns
SCC/SMC/SPI outputs—external clock (NMSI) delay	t_{NEKHOX}	2	8	ns
TDM outputs/SI delay	t_{TDKHOX}	2.5	11	ns
PIO outputs delay	t_{PIKHOX}	1	11	ns

Notes:
1. Output specifications are measured from the 50% level of the rising edge of CLKIN to the 50% level of the signal. Timings are measured at the pin.
2. The symbols used for timing specifications follow the pattern of $t_{\text{(first two letters of functional block)(signal)(state) (reference)(state)}}$ for inputs and $t_{\text{(first two letters of functional block)(reference)(state)(signal)(state)}}$ for outputs. For example, t_{FIKHOX} symbolizes the FCC inputs internal timing (FI) for the time t_{FCC} memory clock reference (K) goes from the high state (H) until outputs (O) are invalid (X).

Figure 23 provides the AC test load for the CPM.

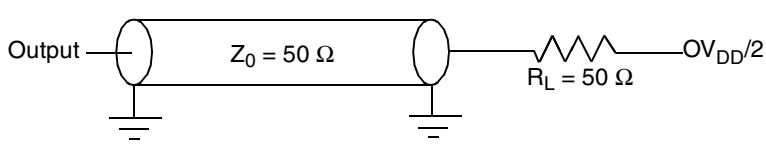

Figure 23. CPM AC Test Load

Figure 24 through Figure 30 represent the AC timing from Table 33 and Table 34. Note that although the specifications generally reference the rising edge of the clock, these AC timing diagrams also apply when the falling edge is the active edge.

Figure 24 shows the FCC internal clock.

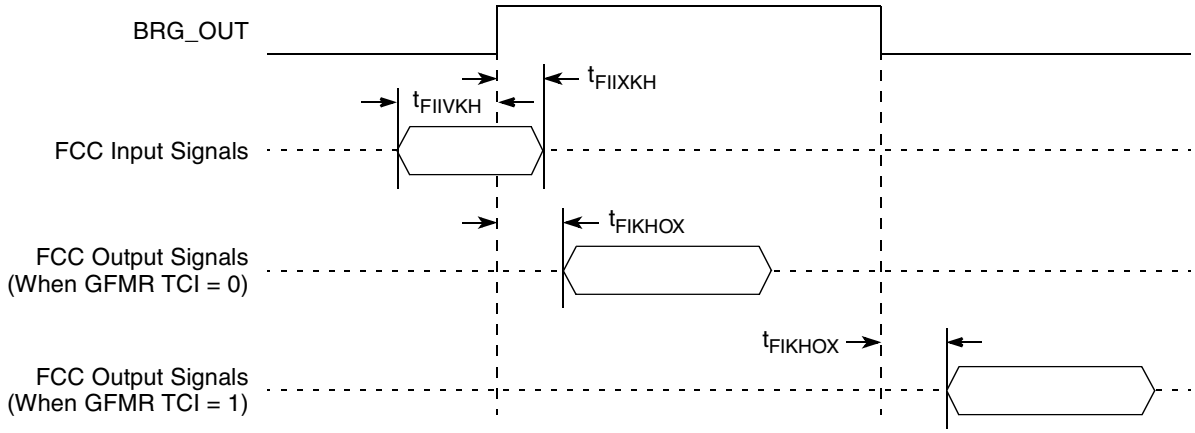

Figure 24. FCC Internal AC Timing Clock Diagram

Figure 25 shows the FCC external clock.

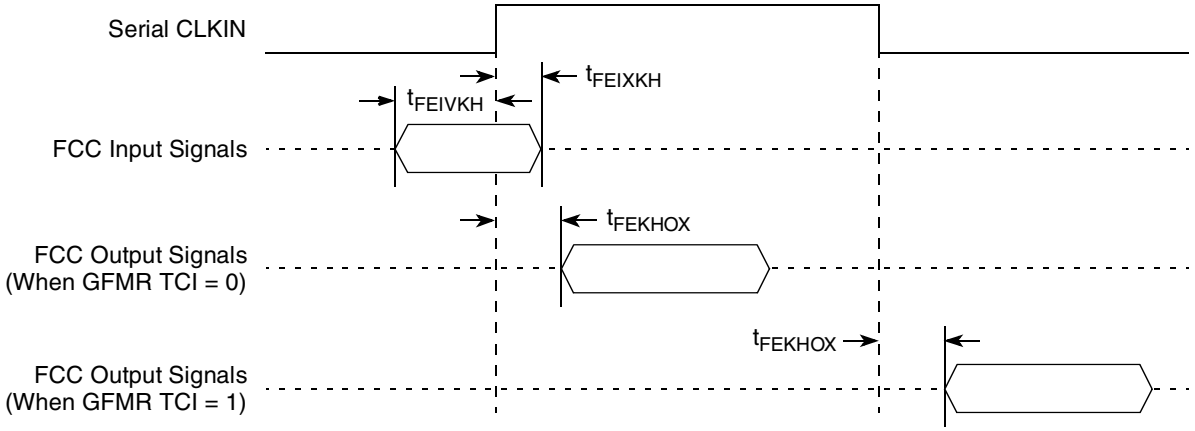

Figure 25. FCC External AC Timing Clock Diagram

Figure 26 shows Ethernet collision timing on FCCs.

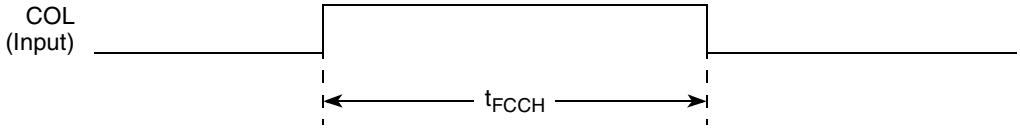

Figure 26. Ethernet Collision AC Timing Diagram (FCC)

Figure 27 shows the SCC/SMC/SPI external clock.

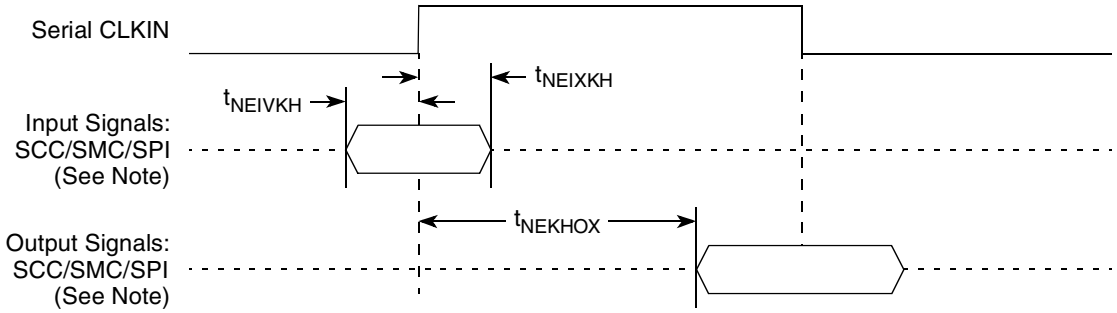

Note: The clock edge is selectable on SCC and SPI.

Figure 27. SCC/SMC/SPI AC Timing External Clock Diagram

Figure 28 shows the SCC/SMC/SPI internal clock.

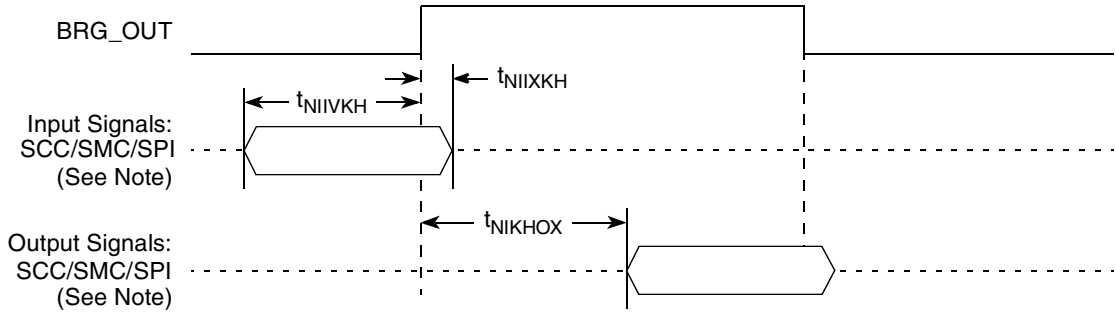

Note: The clock edge is selectable on SCC and SPI.

Figure 28. SCC/SMC/SPI AC Timing Internal Clock Diagram

NOTE

[1] SPI AC timings are internal mode when it is master because SPICLK is an output, and external mode when it is slave.

[2] SPI AC timings refer always to SPICLK.

Figure 29 shows TDM input and output signals.

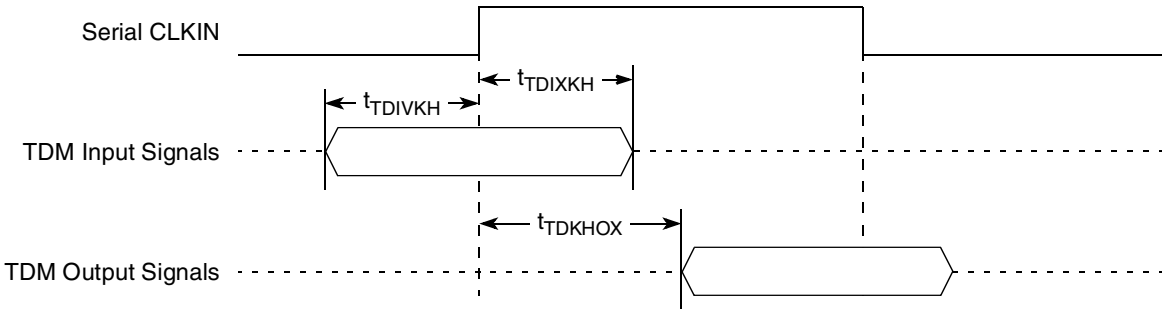

Note: There are 4 possible TDM timing conditions:

1. Input sampled on the rising edge and output driven on the rising edge (shown).
2. Input sampled on the rising edge and output driven on the falling edge.
3. Input sampled on the falling edge and output driven on the falling edge.
4. Input sampled on the falling edge and output driven on the rising edge.

Figure 29. TDM Signal AC Timing Diagram

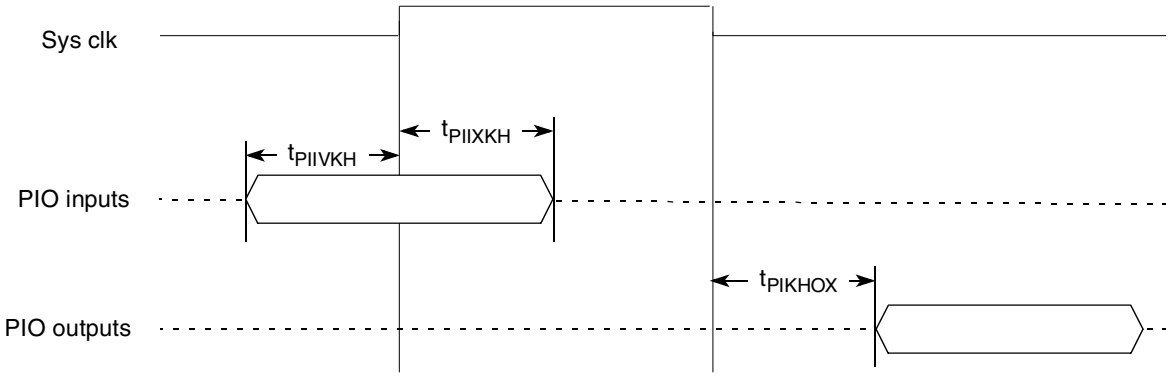

Figure 30. PIO Signal Diagram

10.3 CPM I2C AC Specification

Table 35. I2C Timing

Characteristic	Expression	All Frequencies		Unit
		Min	Max	
SCL clock frequency (slave)	f_{SCL}	0	F_{MAX} (1)	Hz
SCL clock frequency (master)	f_{SCL}	BRGCLK/16512	BRGCLK/48	Hz
Bus free time between transmissions	t_{SDHDL}	1/(2.2 * f_{SCL})	-	s
Low period of SCL	t_{SCLCH}	1/(2.2 * f_{SCL})	-	s
High period of SCL	t_{SCHCL}	1/(2.2 * f_{SCL})	-	s
Start condition setup time[2]	t_{SCHDL}	2/(divider * f_{SCL})	- (2)	s
Start condition hold time[2]	t_{SDLCL}	3/(divider * f_{SCL})	-	s
Data hold time [2]	t_{SCLDX}	2/(divider * f_{SCL})	-	s
Data setup time[2]	t_{SDVCH}	3/(divider * f_{SCL})	-	s
SDA/SCL rise time	t_{SRISE}	-	1/(10 * f_{SCL})	s

Table 35. I2C Timing (continued)

Characteristic	Expression	All Frequencies		Unit
		Min	Max	
SDA/SCL fall time	t_{SFALL}	-	$1/(33 * f_{SCL})$	s
Stop condition setup time	t_{SCHDH}	$2/(divider * f_{SCL})$	-	s

Notes:

1. F_{MAX} = BRGCLK/(min_divider*prescale. Where prescaler=25-I2MODE[PDIV]; and min_divider=12 if digital filter disabled and 18 if enabled.
   Example #1: if I2MODE[PDIV]=11 (prescaler=4) and I2MODE[FLT]=0 (digital filter disabled) then FMAX=BRGCLK/48
   Example #2: if I2MODE[PDIV]=00 (prescaler=32) and I2MODE[FLT]=1 (digital filter enabled) then FMAX=BRGCLK/576
2. divider = f_{SCL}/prescaler.
   In master mode: divider=BRGCLK/(f_{SCL}*prescaler)=2*(I2BRG[DIV]+3)
   In slave mode: divider=BRGCLK/(f_{SCL}*prescaler)

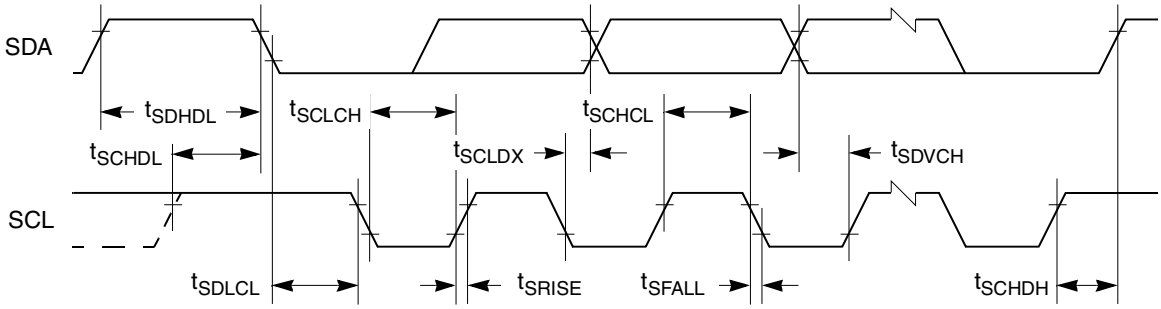

Figure 31. CPM I2C Bus Timing Diagram

The following two tables are examples of I2C AC parameters at I2C clock value of 100k and 400k respectively.

Table 36. CPM I2C Timing (f_{SCL}=100 kHz)

Characteristic	Expression	Frequency = 100 kHz		Unit
		Min	Max	
SCL clock frequency (slave)	f_{SCL}	—	100	kHz
SCL clock frequency (master)	f_{SCL}	—	100	kHz
Bus free time between transmissions	t_{SDHDL}	4.7	—	µs
Low period of SCL	t_{SCLCH}	4.7	—	µs
High period of SCL	t_{SCHCL}	4	—	µs
Start condition setup time	t_{SCHDL}	2	—	µs
Start condition hold time	t_{SDLCL}	3	—	µs
Data hold time	t_{SCLDX}	2	—	µs
Data setup time	t_{SDVCH}	3	—	µs
SDA/SCL rise time	t_{SRISE}	—	1	µs
SDA/SCL fall time (master)	t_{SFALL}	—	303	ns
Stop condition setup time	t_{SCHDH}	2	—	µs

Table 37. CPM I2C Timing (f_{SCL}=400 kHz)

Characteristic	Expression	Frequency = 400 kHz		Unit
		Min	Max	
SCL clock frequency (slave)	f_{SCL}	—	400	kHz
SCL clock frequency (master)	f_{SCL}	—	400	kHz
Bus free time between transmissions	t_{SDHDL}	1.2	—	µs
Low period of SCL	t_{SCLCH}	1.2	—	µs
High period of SCL	t_{SCHCL}	1	—	µs
Start condition setup time	t_{SCHDL}	420	—	ns
Start condition hold time	t_{SDLCL}	630	—	ns
Data hold time	t_{SCLDX}	420	—	ns
Data setup time	t_{SDVCH}	630	—	ns
SDA/SCL rise time	t_{SRISE}	—	250	ns
SDA/SCL fall time	t_{SFALL}	—	75	ns
Stop condition setup time	t_{SCHDH}	420	—	ns

11 JTAG

This section describes the AC electrical specifications for the IEEE 1149.1 (JTAG) interface of the MPC8555E.

Table 38 provides the JTAG AC timing specifications as defined in Figure 33 through Figure 36.

Table 38. JTAG AC Timing Specifications (Independent of SYSCLK) [1]

At recommended operating conditions (see Table 2).

Parameter	Symbol [2]	Min	Max	Unit	Notes
JTAG external clock frequency of operation	f_{JTG}	0	33.3	MHz	
JTAG external clock cycle time	t_{JTG}	30	—	ns	
JTAG external clock pulse width measured at 1.4 V	t_{JTKHKL}	15	—	ns	
JTAG external clock rise and fall times	t_{JTGR} & t_{JTGF}	0	2	ns	
$\overline{TRST}$ assert time	t_{TRST}	25	—	ns	3
Input setup times: Boundary-scan data TMS, TDI	 t_{JTDVKH} t_{JTIVKH}	 4 0	 — —	ns	4
Input hold times: Boundary-scan data TMS, TDI	 t_{JTDXKH} t_{JTIXKH}	 20 25	 — —	ns	4
Valid times: Boundary-scan data TDO	 t_{JTKLDV} t_{JTKLOV}	 4 4	 20 25	ns	5
Output hold times: Boundary-scan data TDO	 t_{JTKLDX} t_{JTKLOX}	 — —	 — —	ns	5
JTAG external clock to output high impedance: Boundary-scan data TDO	 t_{JTKLDZ} t_{JTKLOZ}	 3 3	 19 9	ns	5, 6

Notes:

1. All outputs are measured from the midpoint voltage of the falling/rising edge of t_{TCLK} to the midpoint of the signal in question. The output timings are measured at the pins. All output timings assume a purely resistive 50-Ω load (see Figure 32). Time-of-flight delays must be added for trace lengths, vias, and connectors in the system.
2. The symbols used for timing specifications herein follow the pattern of $t_{\text{(first two letters of functional block)(signal)(state)(reference)(state)}}$ for inputs and $t_{\text{(first two letters of functional block)(reference)(state)(signal)(state)}}$ for outputs. For example, t_{JTDVKH} symbolizes JTAG device timing (JT) with respect to the time data input signals (D) reaching the valid state (V) relative to the t_{JTG} clock reference (K) going to the high (H) state or setup time. Also, t_{JTDXKH} symbolizes JTAG timing (JT) with respect to the time data input signals (D) went invalid (X) relative to the t_{JTG} clock reference (K) going to the high (H) state. Note that, in general, the clock reference symbol representation is based on three letters representing the clock of a particular functional. For rise and fall times, the latter convention is used with the appropriate letter: R (rise) or F (fall).
3. $\overline{TRST}$ is an asynchronous level sensitive signal. The setup time is for test purposes only.
4. Non-JTAG signal input timing with respect to t_{TCLK}.
5. Non-JTAG signal output timing with respect to t_{TCLK}.
6. Guaranteed by design.

Figure 32 provides the AC test load for TDO and the boundary-scan outputs of the MPC8555E.

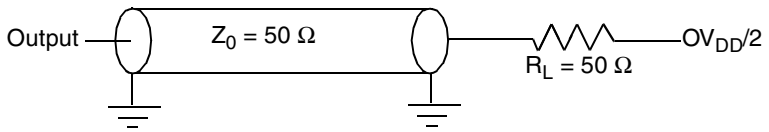

Figure 32. AC Test Load for the JTAG Interface

Figure 33 provides the JTAG clock input timing diagram.

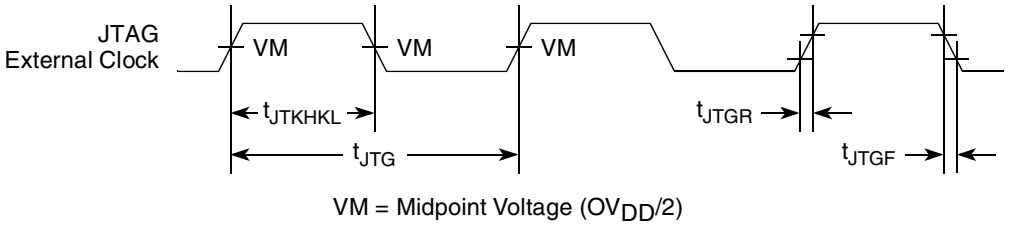

Figure 33. JTAG Clock Input Timing Diagram

Figure 34 provides the $\overline{\text{TRST}}$ timing diagram.

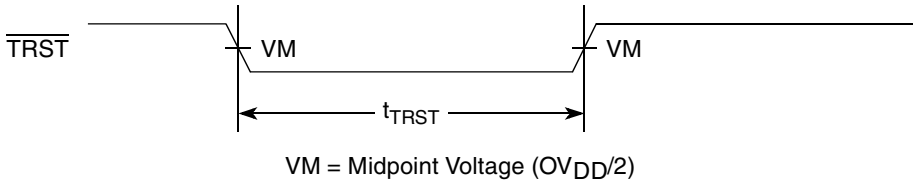

Figure 34. $\overline{\text{TRST}}$ Timing Diagram

Figure 35 provides the boundary-scan timing diagram.

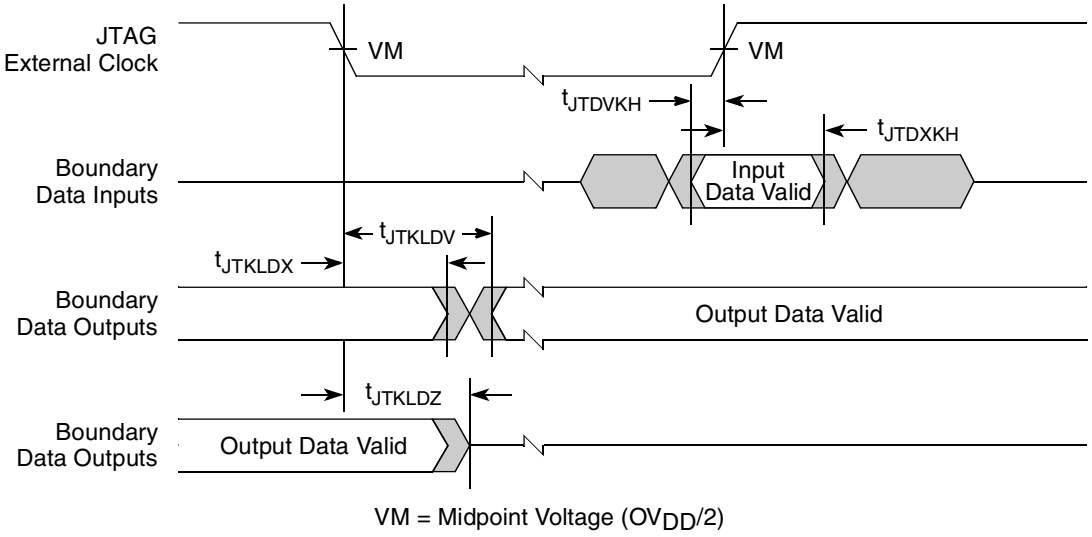

Figure 35. Boundary-Scan Timing Diagram

Figure 36 provides the test access port timing diagram.

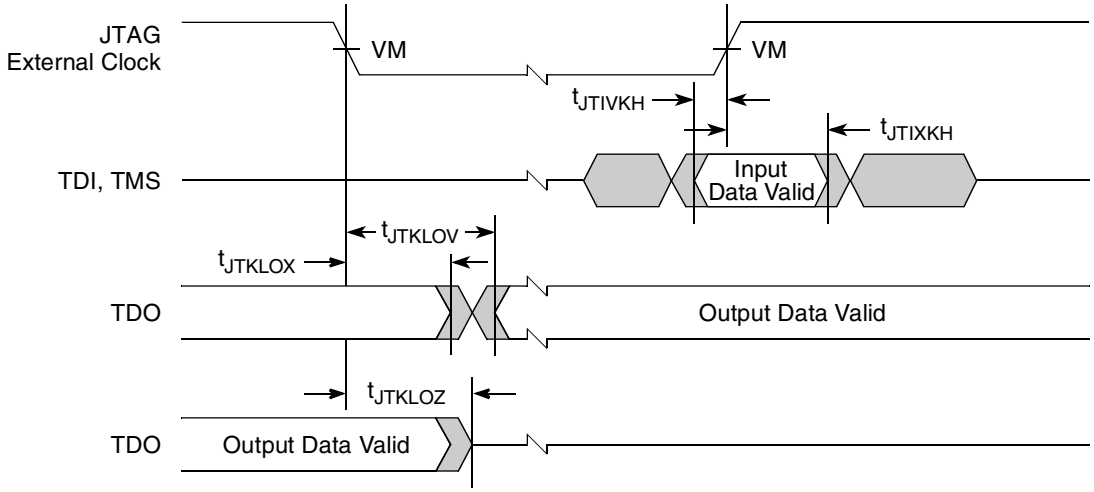

VM = Midpoint Voltage (OV_{DD}/2)

Figure 36. Test Access Port Timing Diagram

12 I²C

This section describes the DC and AC electrical characteristics for the I²C interface of the MPC8555E.

12.1 I²C DC Electrical Characteristics

Table 39 provides the DC electrical characteristics for the I²C interface of the MPC8555E.

Table 39. I²C DC Electrical Characteristics

At recommended operating conditions with OV_{DD} of 3.3 V ± 5%.

Parameter	Symbol	Min	Max	Unit	Notes
Input high voltage level	V_{IH}	$0.7 \times OV_{DD}$	OV_{DD}+ 0.3	V	
Input low voltage level	V_{IL}	–0.3	$0.3 \times OV_{DD}$	V	
Low level output voltage	V_{OL}	0	$0.2 \times OV_{DD}$	V	1
Output fall time from V_{IH}(min) to V_{IL}(max) with a bus capacitance from 10 to 400 pF	t_{I2KLKV}	$20 + 0.1 \times C_B$	250	ns	2
Pulse width of spikes which must be suppressed by the input filter	t_{I2KHKL}	0	50	ns	3
Input current each I/O pin (input voltage is between $0.1 \times OV_{DD}$ and $0.9 \times OV_{DD}$(max)	I_I	–10	10	µA	4
Capacitance for each I/O pin	C_I	—	10	pF	

Notes:
1. Output voltage (open drain or open collector) condition = 3 mA sink current.
2. C_B = capacitance of one bus line in pF.
3. Refer to the *MPC8555E PowerQUICC™ III Integrated Communications Processor Reference Manual* for information on the digital filter used.
4. I/O pins obstruct the SDA and SCL lines if OV_{DD} is switched off.

12.2 I²C AC Electrical Specifications

Table 40 provides the AC timing parameters for the I²C interface of the MPC8555E.

Table 40. I²C AC Electrical Specifications

All values refer to V_{IH} (min) and V_{IL} (max) levels (see Table 39).

Parameter	Symbol [1]	Min	Max	Unit
SCL clock frequency	f_{I2C}	0	400	kHz
Low period of the SCL clock	t_{I2CL} [6]	1.3	—	µs
High period of the SCL clock	t_{I2CH} [6]	0.6	—	µs
Setup time for a repeated START condition	t_{I2SVKH} [6]	0.6	—	µs
Hold time (repeated) START condition (after this period, the first clock pulse is generated)	t_{I2SXKL} [6]	0.6	—	µs
Data setup time	t_{I2DVKH} [6]	100	—	ns
Data hold time: CBUS compatible masters I²C bus devices	t_{I2DXKL}	 — 0 [2]	 — 0.9 [3]	µs
Rise time of both SDA and SCL signals	t_{I2CR}	20 + 0.1 C_b [4]	300	ns
Fall time of both SDA and SCL signals	t_{I2CF}	20 + 0.1 C_b [4]	300	ns
Set-up time for STOP condition	t_{I2PVKH}	0.6	—	µs
Bus free time between a STOP and START condition	t_{I2KHDX}	1.3	—	µs
Noise margin at the LOW level for each connected device (including hysteresis)	V_{NL}	$0.1 \times OV_{DD}$	—	V
Noise margin at the HIGH level for each connected device (including hysteresis)	V_{NH}	$0.2 \times OV_{DD}$	—	V

Notes:

1. The symbols used for timing specifications herein follow the pattern of $t_{\text{(first two letters of functional block)(signal)(state) (reference)(state)}}$ for inputs and $t_{\text{(first two letters of functional block)(reference)(state)(signal)(state)}}$ for outputs. For example, t_{I2DVKH} symbolizes I²C timing (I2) with respect to the time data input signals (D) reach the valid state (V) relative to the t_{I2C} clock reference (K) going to the high (H) state or setup time. Also, t_{I2SXKL} symbolizes I²C timing (I2) for the time that the data with respect to the start condition (S) went invalid (X) relative to the t_{I2C} clock reference (K) going to the low (L) state or hold time. Also, t_{I2PVKH} symbolizes I²C timing (I2) for the time that the data with respect to the stop condition (P) reaching the valid state (V) relative to the t_{I2C} clock reference (K) going to the high (H) state or setup time. For rise and fall times, the latter convention is used with the appropriate letter: R (rise) or F (fall).
2. MPC8555E provides a hold time of at least 300 ns for the SDA signal (referred to the V_{IHmin} of the SCL signal) to bridge the undefined region of the falling edge of SCL.
3. The maximum t_{I2DVKH} has only to be met if the device does not stretch the LOW period (t_{I2CL}) of the SCL signal.
4. C_B = capacitance of one bus line in pF.
5. Guaranteed by design.

Figure 16 provides the AC test load for the I^{2}C.

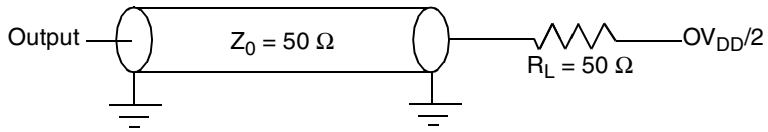

Figure 37. I^{2}C AC Test Load

Figure 38 shows the AC timing diagram for the I^{2}C bus.

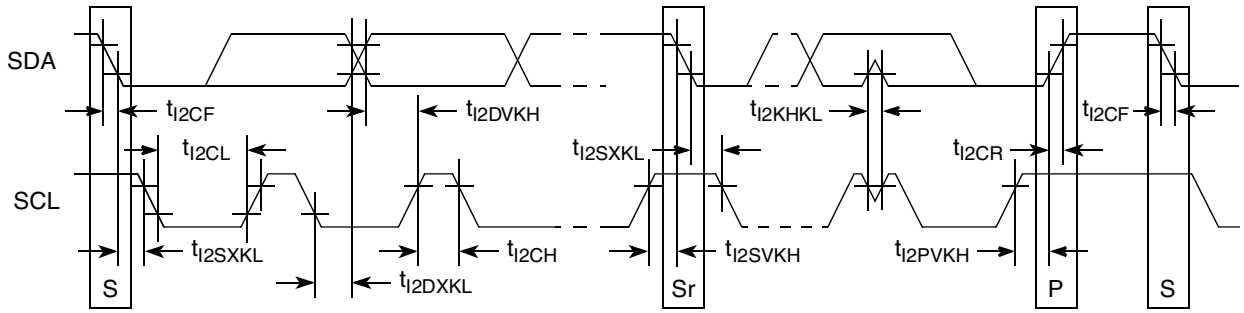

Figure 38. I^{2}C Bus AC Timing Diagram

13 PCI

This section describes the DC and AC electrical specifications for the PCI bus of the MPC8555E.

13.1 PCI DC Electrical Characteristics

Table 41 provides the DC electrical characteristics for the PCI interface of the MPC8555E.

Table 41. PCI DC Electrical Characteristics [1]

Parameter	Symbol	Test Condition	Min	Max	Unit
High-level input voltage	V_{IH}	$V_{OUT} \geq V_{OH}$ (min) or	2	OV_{DD} + 0.3	V
Low-level input voltage	V_{IL}	$V_{OUT} \leq V_{OL}$ (max)	–0.3	0.8	V
Input current	I_{IN}	V_{IN} [2] = 0 V or $V_{IN} = V_{DD}$	—	±5	μA
High-level output voltage	V_{OH}	OV_{DD} = min, I_{OH} = –100 μA	OV_{DD} – 0.2	—	V
Low-level output voltage	V_{OL}	OV_{DD} = min, I_{OL} = 100 μA	—	0.2	V

Notes:
1. Ranges listed do not meet the full range of the DC specifications of the *PCI 2.2 Local Bus Specifications*.
2. Note that the symbol V_{IN}, in this case, represents the OV_{IN} symbol referenced in Table 1 and Table 2.

13.2 PCI AC Electrical Specifications

This section describes the general AC timing parameters of the PCI bus of the MPC8555E. Note that the SYSCLK signal is used as the PCI input clock. Table 42 provides the PCI AC timing specifications at 66 MHz.

NOTE

PCI Clock can be PCI1_CLK or SYSCLK based on POR config input.

NOTE

The input setup time does not meet the PCI specification.

Table 42. PCI AC Timing Specifications at 66 MHz

Parameter	Symbol [1]	Min	Max	Unit	Notes
Clock to output valid	t_{PCKHOV}	—	6.0	ns	2, 3
Output hold from Clock	t_{PCKHOX}	2.0	—	ns	2, 9
Clock to output high impedance	t_{PCKHOZ}	—	14	ns	2, 3, 10
Input setup to Clock	t_{PCIVKH}	3.3	—	ns	2, 4, 9
Input hold from Clock	t_{PCIXKH}	0	—	ns	2, 4, 9
$\overline{\text{REQ64}}$ to $\overline{\text{HRESET}}$ [9] setup time	t_{PCRVRH}	$10 \times t_{SYS}$	—	clocks	5, 6, 10
$\overline{\text{HRESET}}$ to $\overline{\text{REQ64}}$ hold time	t_{PCRHRX}	0	50	ns	6, 10
$\overline{\text{HRESET}}$ high to first $\overline{\text{FRAME}}$ assertion	t_{PCRHFV}	10	—	clocks	7, 10

Notes:
1. Note that the symbols used for timing specifications herein follow the pattern of $t_{\text{(first two letters of functional block)(signal)(state)(reference)(state)}}$ for inputs and $t_{\text{(first two letters of functional block)(reference)(state)(signal)(state)}}$ for outputs. For example, t_{PCIVKH} symbolizes PCI timing (PC) with respect to the time the input signals (I) reach the valid state (V) relative to the SYSCLK clock, t_{SYS}, reference (K) going to the high (H) state or setup time. Also, t_{PCRHFV} symbolizes PCI timing (PC) with respect to the time hard reset (R) went high (H) relative to the frame signal (F) going to the valid (V) state.
2. See the timing measurement conditions in the *PCI 2.2 Local Bus Specifications*.
3. For purposes of active/float timing measurements, the Hi-Z or off state is defined to be when the total current delivered through the component pin is less than or equal to the leakage current specification.
4. Input timings are measured at the pin.
5. The timing parameter t_{SYS} indicates the minimum and maximum CLK cycle times for the various specified frequencies. The system clock period must be kept within the minimum and maximum defined ranges. For values see Section 15, "Clocking."
6. The setup and hold time is with respect to the rising edge of $\overline{\text{HRESET}}$.
7. The timing parameter t_{PCRHFV} is a minimum of 10 clocks rather than the minimum of 5 clocks in the *PCI 2.2 Local Bus Specifications*.
8. The reset assertion timing requirement for $\overline{\text{HRESET}}$ is 100 µs.
9. Guaranteed by characterization.
10. Guaranteed by design.

Figure 16 provides the AC test load for PCI.

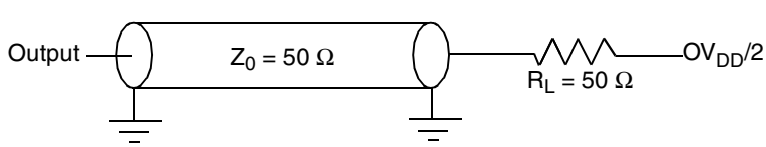

Figure 39. PCI AC Test Load

Figure 40 shows the PCI input AC timing conditions.

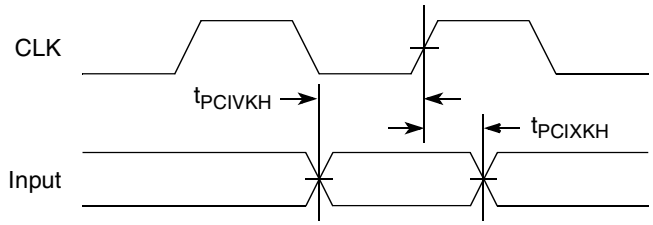

Figure 40. PCI Input AC Timing Measurement Conditions

Figure 41 shows the PCI output AC timing conditions.

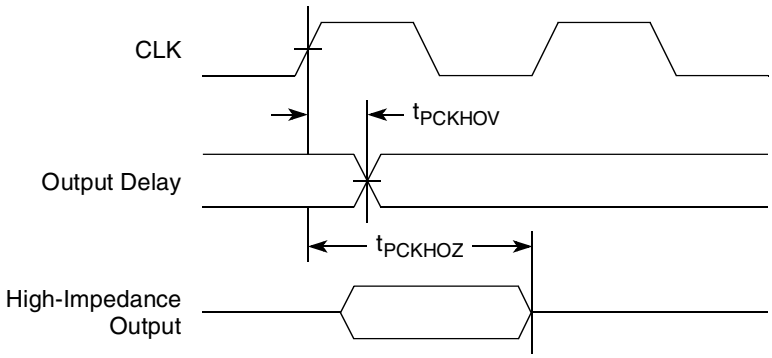

Figure 41. PCI Output AC Timing Measurement Condition

14 Package and Pin Listings

This section details package parameters, pin assignments, and dimensions.

14.1 Package Parameters for the MPC8555E FC-PBGA

The package parameters are as provided in the following list. The package type is 29 mm × 29 mm, 783 flip chip plastic ball grid array (FC-PBGA).

Die size	8.7 mm × 9.3 mm × 0.75 mm
Package outline	29 mm × 29 mm
Interconnects	783
Pitch	1 mm
Minimum module height	3.07 mm
Maximum module height	3.75 mm
Solder Balls	62 Sn/36 Pb/2 Ag
Ball diameter (typical)	0.5 mm

14.2 Mechanical Dimensions of the FC-PBGA

Figure 42 the mechanical dimensions and bottom surface nomenclature of the MPC8555E 783 FC-PBGA package.

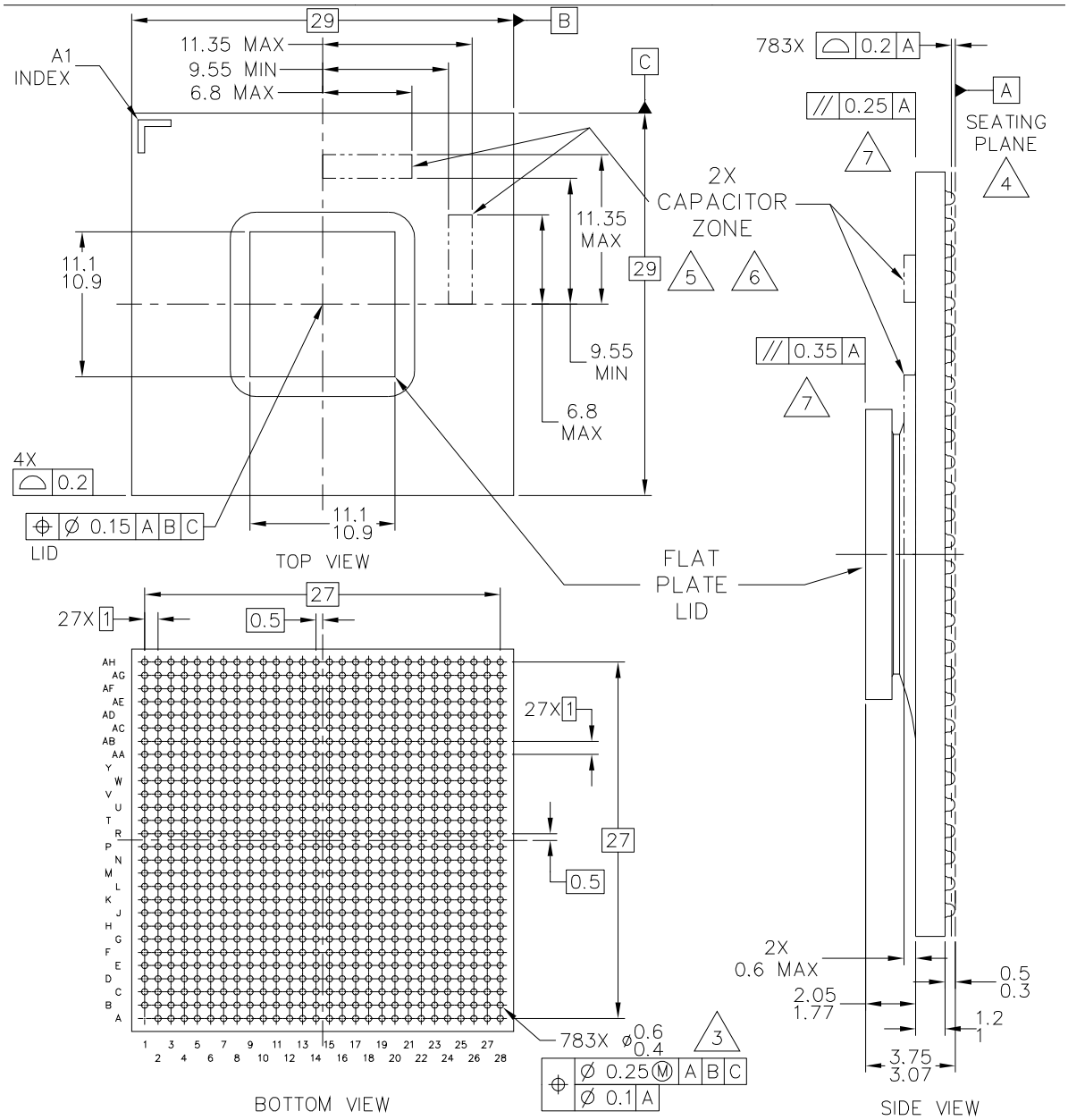

Figure 42. Mechanical Dimensions and Bottom Surface Nomenclature of the FC-PBGA

Notes:

1. All dimensions are in millimeters.
2. Dimensions and tolerances per ASME Y14.5M-1994.
3. Maximum solder ball diameter measured parallel to datum A.
4. Datum A, the seating plane, is defined by the spherical crowns of the solder balls.
5. Capacitors may not be present on all devices.
6. Caution must be taken not to short capacitors or exposed metal capacitor pads on package top.
7. The socket lid must always be oriented to A1.

14.3 Pinout Listings

Table 43 provides the pin-out listing for the MPC8555E, 783 FC-PBGA package.

Table 43. MPC8555E Pinout Listing

Signal	Package Pin Number	Pin Type	Power Supply	Notes
PCI1 and PCI2 (one 64-bit or two 32-bit)				
PCI1_AD[63:32], PCI2_AD[31:0]	AA14, AB14, AC14, AD14, AE14, AF14, AG14, AH14, V15, W15, Y15, AA15, AB15, AC15, AD15, AG15, AH15, V16, W16, AB16, AC16, AD16, AE16, AF16, V17, W17, Y17, AA17, AB17, AE17, AF17, AF18	I/O	OV_{DD}	17
PCI1_AD[31:0]	AH6, AD7, AE7, AH7, AB8, AC8, AF8, AG8, AD9, AE9, AF9, AG9, AH9, W10, Y10, AA10, AE11, AF11, AG11, AH11, V12, W12, Y12, AB12, AD12, AE12, AG12, AH12, V13, Y13, AB13, AC13	I/O	OV_{DD}	17
$\overline{\text{PCI_C_BE64}}$[7:4] $\overline{\text{PCI2_C_BE}}$[3:0]	AG13, AH13, V14, W14	I/O	OV_{DD}	17
$\overline{\text{PCI_C_BE64}}$[3:0] $\overline{\text{PCI1_C_BE}}$[3:0]	AH8, AB10, AD11, AC12	I/O	OV_{DD}	17
PCI1_PAR	AA11	I/O	OV_{DD}	—
PCI1_PAR64/PCI2_PAR	Y14	I/O	OV_{DD}	—
$\overline{\text{PCI1_FRAME}}$	AC10	I/O	OV_{DD}	2
$\overline{\text{PCI1_TRDY}}$	AG10	I/O	OV_{DD}	2
$\overline{\text{PCI1_IRDY}}$	AD10	I/O	OV_{DD}	2
$\overline{\text{PCI1_STOP}}$	V11	I/O	OV_{DD}	2
$\overline{\text{PCI1_DEVSEL}}$	AH10	I/O	OV_{DD}	2
PCI1_IDSEL	AA9	I	OV_{DD}	—
$\overline{\text{PCI1_REQ64}}$/$\overline{\text{PCI2_FRAME}}$	AE13	I/O	OV_{DD}	5, 10
$\overline{\text{PCI1_ACK64}}$/$\overline{\text{PCI2_DEVSEL}}$	AD13	I/O	OV_{DD}	2
$\overline{\text{PCI1_PERR}}$	W11	I/O	OV_{DD}	2
$\overline{\text{PCI1_SERR}}$	Y11	I/O	OV_{DD}	2, 4
$\overline{\text{PCI1_REQ}}$[0]	AF5	I/O	OV_{DD}	—
$\overline{\text{PCI1_REQ}}$[1:4]	AF3, AE4, AG4, AE5	I	OV_{DD}	—
$\overline{\text{PCI1_GNT}}$[0]	AE6	I/O	OV_{DD}	—
$\overline{\text{PCI1_GNT}}$[1:4]	AG5, AH5, AF6, AG6	O	OV_{DD}	5, 9
PCI1_CLK	AH25	I	OV_{DD}	—
PCI2_CLK	AH27	I	OV_{DD}	—
$\overline{\text{PCI2_GNT}}$[0]	AC18	I/O	OV_{DD}	—

Table 43. MPC8555E Pinout Listing (continued)

Signal	Package Pin Number	Pin Type	Power Supply	Notes
$\overline{\text{PCI2_GNT}}$[1:4]	AD18, AE18, AE19, AD19	O	OV_{DD}	5, 9
PCI2_IDSEL	AC22	I	OV_{DD}	—
$\overline{\text{PCI2_IRDY}}$	AD20	I/O	OV_{DD}	2
$\overline{\text{PCI2_PERR}}$	AC20	I/O	OV_{DD}	2
$\overline{\text{PCI2_REQ}}$[0]	AD21	I/O	OV_{DD}	—
$\overline{\text{PCI2_REQ}}$[1:4]	AE21, AD22, AE22, AC23	I	OV_{DD}	—
$\overline{\text{PCI2_SERR}}$	AE20	I/O	OV_{DD}	2,4
$\overline{\text{PCI2_STOP}}$	AC21	I/O	OV_{DD}	2
$\overline{\text{PCI2_TRDY}}$	AC19	I/O	OV_{DD}	2
DDR SDRAM Memory Interface				
MDQ[0:63]	M26, L27, L22, K24, M24, M23, K27, K26, K22, J28, F26, E27, J26, J23, H26, G26, C26, E25, C24, E23, D26, C25, A24, D23, B23, F22, J21, G21, G22, D22, H21, E21, N18, J18, D18, L17, M18, L18, C18, A18, K17, K16, C16, B16, G17, L16, A16, L15, G15, E15, C14, K13, C15, D15, E14, D14, D13, E13, D12, A11, F13, H13, A13, B12	I/O	GV_{DD}	—
MECC[0:7]	N20, M20, L19, E19, C21, A21, G19, A19	I/O	GV_{DD}	—
MDM[0:8]	L24, H28, F24, L21, E18, E16, G14, B13, M19	O	GV_{DD}	—
MDQS[0:8]	L26, J25, D25, A22, H18, F16, F14, C13, C20	I/O	GV_{DD}	—
MBA[0:1]	B18, B19	O	GV_{DD}	—
MA[0:14]	N19, B21, F21, K21, M21, C23, A23, B24, H23, G24, K19, B25, D27, J14, J13	O	GV_{DD}	—
$\overline{\text{MWE}}$	D17	O	GV_{DD}	—
$\overline{\text{MRAS}}$	F17	O	GV_{DD}	—
$\overline{\text{MCAS}}$	J16	O	GV_{DD}	—
$\overline{\text{MCS}}$[0:3]	H16, G16, J15, H15	O	GV_{DD}	—
MCKE[0:1]	E26, E28	O	GV_{DD}	11
MCK[0:5]	J20, H25, A15, D20, F28, K14	O	GV_{DD}	—
$\overline{\text{MCK}}$[0:5]	F20, G27, B15, E20, F27, L14	O	GV_{DD}	—
MSYNC_IN	M28	I	GV_{DD}	22
MSYNC_OUT	N28	O	GV_{DD}	22
Local Bus Controller Interface				
LA[27]	U18	O	OV_{DD}	5, 9

Table 43. MPC8555E Pinout Listing (continued)

Signal	Package Pin Number	Pin Type	Power Supply	Notes
LA[28:31]	T18, T19, T20, T21	O	OV_{DD}	5, 7, 9
LAD[0:31]	AD26, AD27, AD28, AC26, AC27, AC28, AA22, AA23, AA26, Y21, Y22, Y26, W20, W22, W26, V19, T22, R24, R23, R22, R21, R18, P26, P25, P20, P19, P18, N22, N23, N24, N25, N26	I/O	OV_{DD}	—
LALE	V21	O	OV_{DD}	5, 8, 9
LBCTL	V20	O	OV_{DD}	9
LCKE	U23	O	OV_{DD}	—
LCLK[0:2]	U27, U28, V18	O	OV_{DD}	—
$\overline{\text{LCS}}$[0:4]	Y27, Y28, W27, W28, R27	O	OV_{DD}	—
$\overline{\text{LCS5}}$/$\overline{\text{DMA_DREQ2}}$	R28	I/O	OV_{DD}	1
$\overline{\text{LCS6}}$/$\overline{\text{DMA_DACK2}}$	P27	O	OV_{DD}	1
$\overline{\text{LCS7}}$/$\overline{\text{DMA_DDONE2}}$	P28	O	OV_{DD}	1
LDP[0:3]	AA27, AA28, T26, P21	I/O	OV_{DD}	—
LGPL0/LSDA10	U19	O	OV_{DD}	5, 9
LGPL1/$\overline{\text{LSDWE}}$	U22	O	OV_{DD}	5, 9
LGPL2/$\overline{\text{LOE}}$/$\overline{\text{LSDRAS}}$	V28	O	OV_{DD}	5, 8, 9
LGPL3/$\overline{\text{LSDCAS}}$	V27	O	OV_{DD}	5, 9
LGPL4/$\overline{\text{LGTA}}$/LUPWAIT/ LPBSE	V23	I/O	OV_{DD}	21
LGPL5	V22	O	OV_{DD}	5, 9
LSYNC_IN	T27	I	OV_{DD}	—
LSYNC_OUT	T28	O	OV_{DD}	—
$\overline{\text{LWE}}$[0:1]/LSDDQM[0:1]/ $\overline{\text{LBS}}$[0:1]	AB28, AB27	O	OV_{DD}	1, 5, 9
$\overline{\text{LWE}}$[2:3]/LSDDQM[2:3]/ $\overline{\text{LBS}}$[2:3]	T23, P24	O	OV_{DD}	1, 5, 9
DMA				
$\overline{\text{DMA_DREQ}}$[0:1]	H5, G4	I	OV_{DD}	—
$\overline{\text{DMA_DACK}}$[0:1]	H6, G5	O	OV_{DD}	—
$\overline{\text{DMA_DDONE}}$[0:1]	H7, G6	O	OV_{DD}	—
Programmable Interrupt Controller				
$\overline{\text{MCP}}$	AG17	I	OV_{DD}	—
$\overline{\text{UDE}}$	AG16	I	OV_{DD}	—

Table 43. MPC8555E Pinout Listing (continued)

Signal	Package Pin Number	Pin Type	Power Supply	Notes
IRQ[0:7]	AA18, Y18, AB18, AG24, AA21, Y19, AA19, AG25	I	OV_{DD}	—
IRQ8	AB20	I	OV_{DD}	9
IRQ9/$\overline{\text{DMA_DREQ3}}$	Y20	I	OV_{DD}	1
IRQ10/$\overline{\text{DMA_DACK3}}$	AF26	I/O	OV_{DD}	1
IRQ11/$\overline{\text{DMA_DDONE3}}$	AH24	I/O	OV_{DD}	1
$\overline{\text{IRQ_OUT}}$	AB21	O	OV_{DD}	2, 4
Ethernet Management Interface				
EC_MDC	F1	O	OV_{DD}	5, 9
EC_MDIO	E1	I/O	OV_{DD}	—
Gigabit Reference Clock				
EC_GTX_CLK125	E2	I	LV_{DD}	—
Three-Speed Ethernet Controller (Gigabit Ethernet 1)				
TSEC1_TXD[7:4]	A6, F7, D7, C7	O	LV_{DD}	—
TSEC1_TXD[3:0]	B7, A7, G8, E8	O	LV_{DD}	9, 18
TSEC1_TX_EN	C8	O	LV_{DD}	11
TSEC1_TX_ER	B8	O	LV_{DD}	—
TSEC1_TX_CLK	C6	I	LV_{DD}	—
TSEC1_GTX_CLK	B6	O	LV_{DD}	—
TSEC1_CRS	C3	I	LV_{DD}	—
TSEC1_COL	G7	I	LV_{DD}	—
TSEC1_RXD[7:0]	D4, B4, D3, D5, B5, A5, F6, E6	I	LV_{DD}	—
TSEC1_RX_DV	D2	I	LV_{DD}	—
TSEC1_RX_ER	E5	I	LV_{DD}	—
TSEC1_RX_CLK	D6	I	LV_{DD}	—
Three-Speed Ethernet Controller (Gigabit Ethernet 2)				
TSEC2_TXD[7:4]	B10, A10, J10, K11	O	LV_{DD}	—
TSEC2_TXD[3:0]	J11, H11, G11, E11	O	LV_{DD}	5, 9, 18
TSEC2_TX_EN	B11	O	LV_{DD}	11
TSEC2_TX_ER	D11	O	LV_{DD}	—
TSEC2_TX_CLK	D10	I	LV_{DD}	—
TSEC2_GTX_CLK	C10	O	LV_{DD}	—

Table 43. MPC8555E Pinout Listing (continued)

Signal	Package Pin Number	Pin Type	Power Supply	Notes
TSEC2_CRS	D9	I	LV_{DD}	—
TSEC2_COL	F8	I	LV_{DD}	—
TSEC2_RXD[7:0]	F9, E9, C9, B9, A9, H9, G10, F10	I	LV_{DD}	—
TSEC2_RX_DV	H8	I	LV_{DD}	—
TSEC2_RX_ER	A8	I	LV_{DD}	—
TSEC2_RX_CLK	E10	I	LV_{DD}	—
DUART				
$\overline{\text{UART_CTS}}$[0,1]	Y2, Y3	I	OV_{DD}	—
$\overline{\text{UART_RTS}}$[0,1]	Y1, AD1	O	OV_{DD}	—
UART_SIN[0,1]	P11, AD5	I	OV_{DD}	—
UART_SOUT[0,1]	N6, AD2	O	OV_{DD}	—
I^2C interface				
IIC_SDA	AH22	I/O	OV_{DD}	4, 19
IIC_SCL	AH23	I/O	OV_{DD}	4, 19
System Control				
$\overline{\text{HRESET}}$	AH16	I	OV_{DD}	—
$\overline{\text{HRESET_REQ}}$	AG20	O	OV_{DD}	18
$\overline{\text{SRESET}}$	AF20	I	OV_{DD}	—
$\overline{\text{CKSTP_IN}}$	M11	I	OV_{DD}	—
$\overline{\text{CKSTP_OUT}}$	G1	O	OV_{DD}	2, 4
Debug				
TRIG_IN	N12	I	OV_{DD}	—
TRIG_OUT/READY	G2	O	OV_{DD}	6, 9, 18
MSRCID[0:1]	J9, G3	O	OV_{DD}	5, 6, 9
MSRCID[2:3]	F3, F5	O	OV_{DD}	6
MSRCID4	F2	O	OV_{DD}	6
MDVAL	F4	O	OV_{DD}	6
Clock				
SYSCLK	AH21	I	OV_{DD}	—
RTC	AB23	I	OV_{DD}	—
CLK_OUT	AF22	O	OV_{DD}	—

Table 43. MPC8555E Pinout Listing (continued)

Signal	Package Pin Number	Pin Type	Power Supply	Notes
JTAG				
TCK	AF21	I	OV_{DD}	—
TDI	AG21	I	OV_{DD}	12
TDO	AF19	O	OV_{DD}	11
TMS	AF23	I	OV_{DD}	12
$\overline{\text{TRST}}$	AG23	I	OV_{DD}	12
DFT				
$\overline{\text{LSSD_MODE}}$	AG19	I	OV_{DD}	20
L1_TSTCLK	AB22	I	OV_{DD}	20
L2_TSTCLK	AG22	I	OV_{DD}	20
$\overline{\text{TEST_SEL0}}$	AH20	I	OV_{DD}	3
TEST_SEL1	AG26	I	OV_{DD}	3
Thermal Management				
THERM0	AG2	—	—	14
THERM1	AH3	—	—	14
Power Management				
ASLEEP	AG18	—	—	9, 18
Power and Ground Signals				
$AV_{DD}1$	AH19	Power for e500 PLL (1.2 V)	$AV_{DD}1$	—
$AV_{DD}2$	AH18	Power for CCB PLL (1.2 V)	$AV_{DD}2$	—
$AV_{DD}3$	AH17	Power for CPM PLL (1.2 V)	$AV_{DD}3$	—
$AV_{DD}4$	AF28	Power for PCI1 PLL (1.2 V)	$AV_{DD}4$	—
$AV_{DD}5$	AE28	Power for PCI2 PLL (1.2 V)	$AV_{DD}5$	—

Table 43. MPC8555E Pinout Listing (continued)

Signal	Package Pin Number	Pin Type	Power Supply	Notes
GND	A12, A17, B3, B14, B20, B26, B27, C2, C4, C11,C17, C19, C22, C27, D8, E3, E12, E24, F11, F18, F23, G9, G12, G25, H4, H12, H14, H17, H20, H22, H27, J19, J24, K5, K9, K18, K23, K28, L6, L20, L25, M4, M12, M14, M16, M22, M27, N2, N13, N15, N17, P12, P14, P16, P23, R13, R15, R17, R20, R26, T3, T8, T10, T12, T14, T16, U6, U13, U15, U16, U17, U21, V7, V10, V26, W5, W18, W23, Y8, Y16, AA6, AA13, AB4, AB11, AB19, AC6, AC9, AD3, AD8, AD17, AF2, AF4, AF10, AF13, AF15, AF27, AG3, AG7	—	—	—
GV_{DD}	A14, A20, A25, A26, A27, A28, B17, B22, B28, C12, C28, D16, D19, D21, D24, D28, E17, E22, F12, F15, F19, F25, G13, G18, G20, G23, G28, H19, H24, J12, J17, J22, J27, K15, K20, K25, L13, L23, L28, M25, N21	Power for DDR DRAM I/O Voltage (2.5 V)	GV_{DD}	—
LV_{DD}	A4, C5, E7, H10	Reference Voltage; Three-Speed Ethernet I/O (2.5 V, 3.3 V)	LV_{DD}	—
MV_{REF}	N27	Reference Voltage Signal; DDR	MV_{REF}	—
No Connects	AA24, AA25, AA3, AA4, AA7 AA8, AB24, AB25, AC24, AC25, AD23, AD24, AD25, AE23, AE24, AE25, AE26, AE27, AF24, AF25, H1, H2, J1, J2, J3, J4, J5, J6, M1, N1, N10, N11, N4, N5, N7, N8, N9, P10, P8, P9, R10, R11, T24, T25, U24, U25, V24, V25, W24, W25, W9, Y24, Y25, Y5, Y6, Y9, AH26, AH28, AG28, AH1, AG1, AH2, B1, B2, A2, A3	—	—	16
OV_{DD}	D1, E4, H3, K4, K10, L7, M5, N3, P22, R19, R25, T2, T7, U5, U20, U26, V8, W4, W13, W19, W21, Y7, Y23, AA5, AA12, AA16, AA20, AB7, AB9, AB26, AC5, AC11, AC17, AD4, AE1, AE8, AE10, AE15, AF7, AF12, AG27, AH4	PCI, 10/100 Ethernet, and other Standard (3.3 V)	OV_{DD}	—
RESERVED	C1, T11, U11, AF1	—	—	15
SENSEVDD	L12	Power for Core (1.2 V)	V_{DD}	13
SENSEVSS	K12	—	—	13
V_{DD}	M13, M15, M17, N14, N16, P13, P15, P17, R12, R14, R16, T13, T15, T17, U12, U14	Power for Core (1.2 V)	V_{DD}	—
CPM				
PA[8:31]	J7, J8, K8, K7, K6, K3, K2, K1, L1, L2, L3, L4, L5, L8, L9, L10, L11, M10, M9, M8, M7, M6, M3, M2	I/0	OV_{DD}	—

Table 43. MPC8555E Pinout Listing (continued)

Signal	Package Pin Number	Pin Type	Power Supply	Notes
PB[18:31]	P7, P6, P5, P4, P3, P2, P1, R1, R2, R3, R4, R5, R6, R7	I/0	OV_{DD}	—
PC[0, 1, 4–29]	R8, R9, T9, T6, T5, T4, T1, U1, U2, U3, U4, U7, U8, U9, U10, V9, V6, V5, V4, V3, V2, V1, W1, W2, W3, W6, W7, W8	I/0	OV_{DD}	—
PD[7, 14–25, 29–31]	Y4, AA2, AA1, AB1, AB2, AB3, AB5, AB6, AC7, AC4, AC3, AC2, AC1, AD6, AE3, AE2	I/0	OV_{DD}	—

Notes:

1. All multiplexed signals are listed only once and do not re-occur. For example, $\overline{\text{LCS5}}/\overline{\text{DMA_REQ2}}$ is listed only once in the Local Bus Controller Interface section, and is not mentioned in the DMA section even though the pin also functions as $\overline{\text{DMA_REQ2}}$.
2. Recommend a weak pull-up resistor (2–10 kΩ) be placed on this pin to OV_{DD}.
3. TEST_SEL0 must be pulled-high, TEST_SEL1 must be tied to ground.
4. This pin is an open drain signal.
5. This pin is a reset configuration pin. It has a weak internal pull-up P-FET which is enabled only when the MPC8555E is in the reset state. This pull-up is designed such that it can be overpowered by an external 4.7-kΩ pull-down resistor. If an external device connected to this pin might pull it down during reset, then a pull-up or active driver is needed if the signal is intended to be high during reset.
6. Treat these pins as no connects (NC) unless using debug address functionality.
7. The value of LA[28:31] during reset sets the CCB clock to SYSCLK PLL ratio. These pins require 4.7-kΩ pull-up or pull-down resistors. See Section 15.2, "Platform/System PLL Ratio."
8. The value of LALE and LGPL2 at reset set the e500 core clock to CCB Clock PLL ratio. These pins require 4.7-kΩ pull-up or pull-down resistors. See the Section 15.3, "e500 Core PLL Ratio."
9. Functionally, this pin is an output, but structurally it is an I/O because it either samples configuration input during reset or because it has other manufacturing test functions. This pin therefore is described as an I/O for boundary scan.
10. This pin functionally requires a pull-up resistor, but during reset it is a configuration input that controls 32- vs. 64-bit PCI operation. Therefore, it must be actively driven low during reset by reset logic if the device is to be configured to be a 64-bit PCI device. Refer to the *PCI Specification*.
11. This output is actively driven during reset rather than being three-stated during reset.
12. These JTAG pins have weak internal pull-up P-FETs that are always enabled.
13. These pins are connected to the V_{DD}/GND planes internally and may be used by the core power supply to improve tracking and regulation.
14. Internal thermally sensitive resistor.
15. No connections should be made to these pins.
16. These pins are not connected for any functional use.
17. PCI specifications recommend that a weak pull-up resistor (2–10 kΩ) be placed on the higher order pins to OV_{DD} when using 64-bit buffer mode (pins PCI_AD[63:32] and $\overline{\text{PCI2_C_BE}}$[7:4]).
18. If this pin is connected to a device that pulls down during reset, an external pull-up is required to that is strong enough to pull this signal to a logic 1 during reset.
19. Recommend a pull-up resistor (~1 kΩ) be placed on this pin to OV_{DD}.
20. These are test signals for factory use only and must be pulled up (100Ω to 1kΩ) to OV_{DD} for normal machine operation.
21. If this signal is used as both an input and an output, a weak pull-up (~10kΩ) is required on this pin.
22. MSYNC_IN and MSYNC_OUT should be connected together for proper operation.

15 Clocking

This section describes the PLL configuration of the MPC8555E. Note that the platform clock is identical to the CCB clock.

15.1 Clock Ranges

Table 44 provides the clocking specifications for the processor core and Table 44 provides the clocking specifications for the memory bus.

Table 44. Processor Core Clocking Specifications

Characteristic	Maximum Processor Core Frequency										Unit	Notes
	533 MHz		600 MHz		667 MHz		833 MHz		1000 MHz			
	Min	Max	Min	Max	Min	Max	Min	Max	Min	Max		
e500 core processor frequency	400	533	400	600	400	667	400	833	400	1000	MHz	1, 2, 3

Notes:

1. **Caution:** The CCB to SYSCLK ratio and e500 core to CCB ratio settings must be chosen such that the resulting SYSCLK frequency, e500 (core) frequency, and CCB frequency do not exceed their respective maximum or minimum operating frequencies. Refer to Section 15.2, “Platform/System PLL Ratio,” and Section 15.3, “e500 Core PLL Ratio,” for ratio settings.
2.)The minimum e500 core frequency is based on the minimum platform frequency of 200 MHz.
3. 1000 MHz frequency supports only a 1.3 V core.

Table 45. Memory Bus Clocking Specifications

Characteristic	Maximum Processor Core Frequency		Unit	Notes
	533, 600, 667, 883, 1000 MHz			
	Min	Max		
Memory bus frequency	100	166	MHz	1, 2, 3

Notes:

1. **Caution:** The CCB to SYSCLK ratio and e500 core to CCB ratio settings must be chosen such that the resulting SYSCLK frequency, e500 (core) frequency, and CCB frequency do not exceed their respective maximum or minimum operating frequencies. Refer to Section 15.2, “Platform/System PLL Ratio,” and Section 15.3, “e500 Core PLL Ratio,” for ratio settings.
2. The memory bus speed is half of the DDR data rate, hence, half of the platform clock frequency.
3. 1000 MHz frequency supports only a 1.3 V core.

15.2 Platform/System PLL Ratio

The platform clock is the clock that drives the L2 cache, the DDR SDRAM data rate, and the e500 core complex bus (CCB), and is also called the CCB clock. The values are determined by the binary value on LA[28:31] at power up, as shown in Table 46.

There is no default for this PLL ratio; these signals must be pulled to the desired values.

For specifications on the PCI_CLK, refer to the PCI 2.2 Specification.

Table 46. CCB Clock Ratio

Binary Value of LA[28:31] Signals	Ratio Description
0000	16:1 ratio CCB clock: SYSCLK (PCI bus)
0001	Reserved
0010	2:1 ratio CCB clock: SYSCLK (PCI bus)
0011	3:1 ratio CCB clock: SYSCLK (PCI bus)
0100	4:1 ratio CCB clock: SYSCLK (PCI bus)
0101	5:1 ratio CCB clock: SYSCLK (PCI bus)
0110	6:1 ratio CCB clock: SYSCLK (PCI bus)
0111	Reserved
1000	8:1 ratio CCB clock: SYSCLK (PCI bus)
1001	9:1 ratio CCB clock: SYSCLK (PCI bus)
1010	10:1 ratio CCB clock: SYSCLK (PCI bus)
1011	Reserved
1100	12:1 ratio CCB clock: SYSCLK (PCI bus)
1101	Reserved
1110	Reserved
1111	Reserved

15.3 e500 Core PLL Ratio

Table 47 describes the clock ratio between the e500 core complex bus (CCB) and the e500 core clock. This ratio is determined by the binary value of LALE and LGPL2 at power up, as shown in Table 47.

Table 47. e500 Core to CCB Ratio

Binary Value of LALE, LGPL2 Signals	Ratio Description
00	2:1 e500 core:CCB
01	5:2 e500 core:CCB
10	3:1 e500 core:CCB
11	7:2 e500 core:CCB

15.4 Frequency Options

Table 48 shows the expected frequency values for the platform frequency when using a CCB to SYSCLK ratio in comparison to the memory bus speed.

Table 48. Frequency Options with Respect to Memory Bus Speeds

CCB to SYSCLK Ratio	SYSCLK (MHz)								
	17	25	33	42	67	83	100	111	133
	Platform/CCB Frequency (MHz)								
2							200	222	267
3					200	250	300	333	
4					267	333			
5				208	333				
6			200	250					
8		200	267	333					
9		225	300						
10		250	333						
12	200	300							
16	267								

16 Thermal

This section describes the thermal specifications of the MPC8555E.

16.1 Thermal Characteristics

Table 49 provides the package thermal characteristics for the MPC8555E.

Table 49. Package Thermal Characteristics

Characteristic	Symbol	Value	Unit	Notes
Junction-to-ambient Natural Convection on four layer board (2s2p)	$R_{\theta JMA}$	17	°C/W	1, 2
Junction-to-ambient (@200 ft/min or 1.0 m/s) on four layer board (2s2p)	$R_{\theta JMA}$	14	°C/W	1, 2
Junction-to-ambient (@400 ft/min or 2.0 m/s) on four layer board (2s2p)	$R_{\theta JMA}$	13	°C/W	1, 2
Junction-to-board thermal	$R_{\theta JB}$	10	°C/W	3
Junction-to-case thermal	$R_{\theta JC}$	0.96	°C/W	4

Notes

1. Junction temperature is a function of die size, on-chip power dissipation, package thermal resistance, mounting site (board) temperature, ambient temperature, air flow, power dissipation of other components on the board, and board thermal resistance
2. Per JEDEC JESD51–6 with the board horizontal.
3. Thermal resistance between the die and the printed-circuit board per JEDEC JESD51-8. Board temperature is measured on the top surface of the board near the package.
4. Thermal resistance between the die and the case top surface as measured by the cold plate method (MIL SPEC-883 Method 1012.1). Cold plate temperature is used for case temperature; measured value includes the thermal resistance of the interface layer.

16.2 Thermal Management Information

This section provides thermal management information for the flip chip plastic ball grid array (FC-PBGA) package for air-cooled applications. Proper thermal control design is primarily dependent on the system-level design—the heat sink, airflow, and thermal interface material. The recommended attachment method to the heat sink is illustrated in Figure 43. The heat sink should be attached to the printed-circuit board with the spring force centered over the die. This spring force should not exceed 10 pounds force.

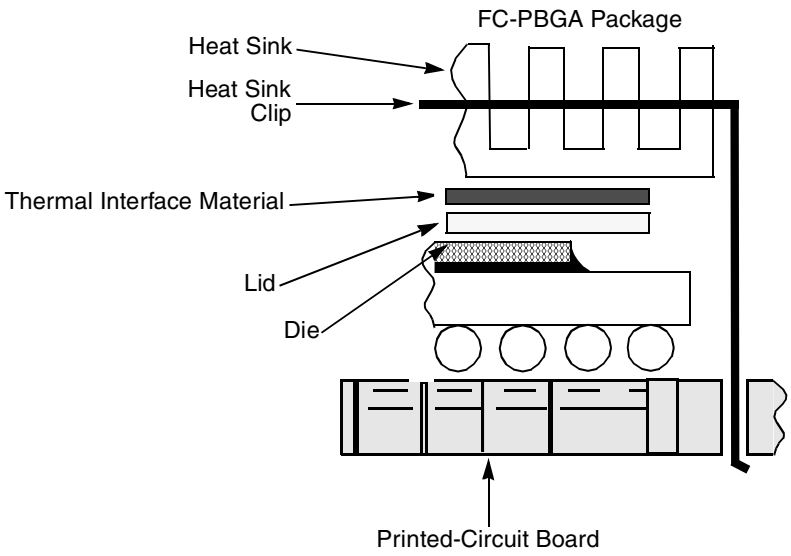

Figure 43. Package Exploded Cross-Sectional View with Several Heat Sink Options

The system board designer can choose between several types of heat sinks to place on the MPC8555E. There are several commercially-available heat sinks from the following vendors:

Aavid Thermalloy 80 Commercial St. Concord, NH 03301 Internet: www.aavidthermalloy.com	603-224-9988
Alpha Novatech 473 Sapena Ct. #15 Santa Clara, CA 95054 Internet: www.alphanovatech.com	408-749-7601
International Electronic Research Corporation (IERC) 413 North Moss St. Burbank, CA 91502 Internet: www.ctscorp.com	818-842-7277
Millennium Electronics (MEI) Loroco Sites 671 East Brokaw Road San Jose, CA 95112 Internet: www.mei-millennium.com	408-436-8770
Tyco Electronics Chip Coolers™ P.O. Box 3668 Harrisburg, PA 17105-3668 Internet: www.chipcoolers.com	800-522-6752
Wakefield Engineering 33 Bridge St. Pelham, NH 03076 Internet: www.wakefield.com	603-635-5102

Ultimately, the final selection of an appropriate heat sink depends on many factors, such as thermal performance at a given air velocity, spatial volume, mass, attachment method, assembly, and cost. Several heat sinks offered by Aavid Thermalloy, Alpha Novatech, IERC, Chip Coolers, Millennium Electronics, and Wakefield Engineering offer different heat sink-to-ambient thermal resistances, that allows the MPC8555E to function in various environments.

16.2.1 Recommended Thermal Model

For system thermal modeling, the MPC8555E thermal model is shown in Figure 44. Five cuboids are used to represent this device. To simplify the model, the solder balls and substrate are modeled as a single block 29x29x1.6 mm with the conductivity adjusted accordingly. The die is modeled as 8.7 x 9.3 mm at a thickness of 0.75 mm. The bump/underfill layer is modeled as a collapsed resistance between the die and substrate assuming a conductivity of 4.4 W/m•K in the thickness dimension of 0.07 mm. The lid attach adhesive is also modeled as a collapsed resistance with dimensions of 8.7 x 9.3 x 0.05 mm and the conductivity of 1.07 W/m•K. The nickel plated copper lid is modeled as 11 x 11 x 1 mm.

Conductivity	Value	Unit
Lid (11 × 11 × 1 mm)		
k_x	360	W/(m × K)
k_y	360	
k_z	360	
Lid Adhesive—Collapsed resistance (8.7 × 9.3 × 0.05 mm)		
k_z	1.07	
Die (8.7 × 9.3 × 0.75 mm)		
Bump/Underfill—Collapsed resistance (8.7 × 9.3 × 0.07 mm)		
k_z	4.4	
Substrate and Solder Balls (25 × 25 × 1.6 mm)		
k_x	14.2	
k_y	14.2	
k_z	1.2	

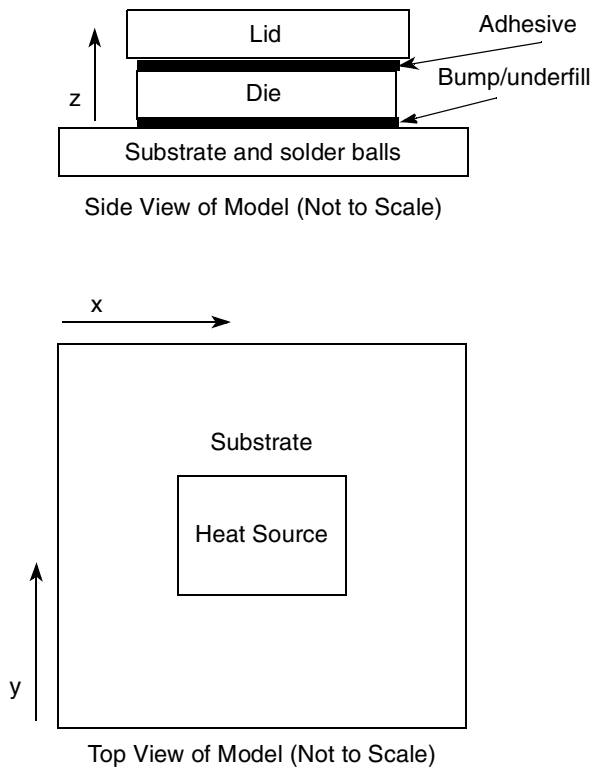

Figure 44. MPC8555E Thermal Model

16.2.2 Internal Package Conduction Resistance

For the packaging technology, shown in Table 49, the intrinsic internal conduction thermal resistance paths are as follows:

- The die junction-to-case thermal resistance
- The die junction-to-board thermal resistance

Figure 45 depicts the primary heat transfer path for a package with an attached heat sink mounted to a printed-circuit board.

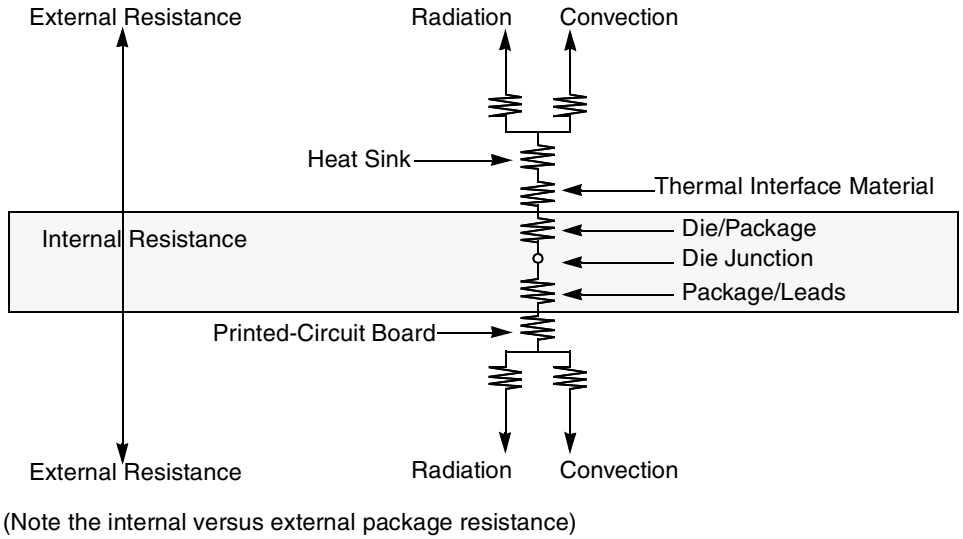

Figure 45. Package with Heat Sink Mounted to a Printed-Circuit Board

The heat sink removes most of the heat from the device. Heat generated on the active side of the chip is conducted through the silicon and through the lid, then through the heat sink attach material (or thermal interface material), and finally to the heat sink. The junction-to-case thermal resistance is low enough that the heat sink attach material and heat sink thermal resistance are the dominant terms.

16.2.3 Thermal Interface Materials

A thermal interface material is required at the package-to-heat sink interface to minimize the thermal contact resistance. For those applications where the heat sink is attached by spring clip mechanism, Figure 46 shows the thermal performance of three thin-sheet thermal-interface materials (silicone, graphite/oil, floroether oil), a bare joint, and a joint with thermal grease as a function of contact pressure. As shown, the performance of these thermal interface materials improves with increasing contact pressure. The use of thermal grease significantly reduces the interface thermal resistance. The bare joint results in a thermal resistance approximately six times greater than the thermal grease joint.

Heat sinks are attached to the package by means of a spring clip to holes in the printed-circuit board (see Figure 42). Therefore, the synthetic grease offers the best thermal performance, especially at the low interface pressure.

When removing the heat sink for re-work, it is preferable to slide the heat sink off slowly until the thermal interface material loses its grip. If the support fixture around the package prevents sliding off the heat sink,

the heat sink should be slowly removed. Heating the heat sink to 40–50°C with an air gun can soften the interface material and make the removal easier. The use of an adhesive for heat sink attach is not recommended.

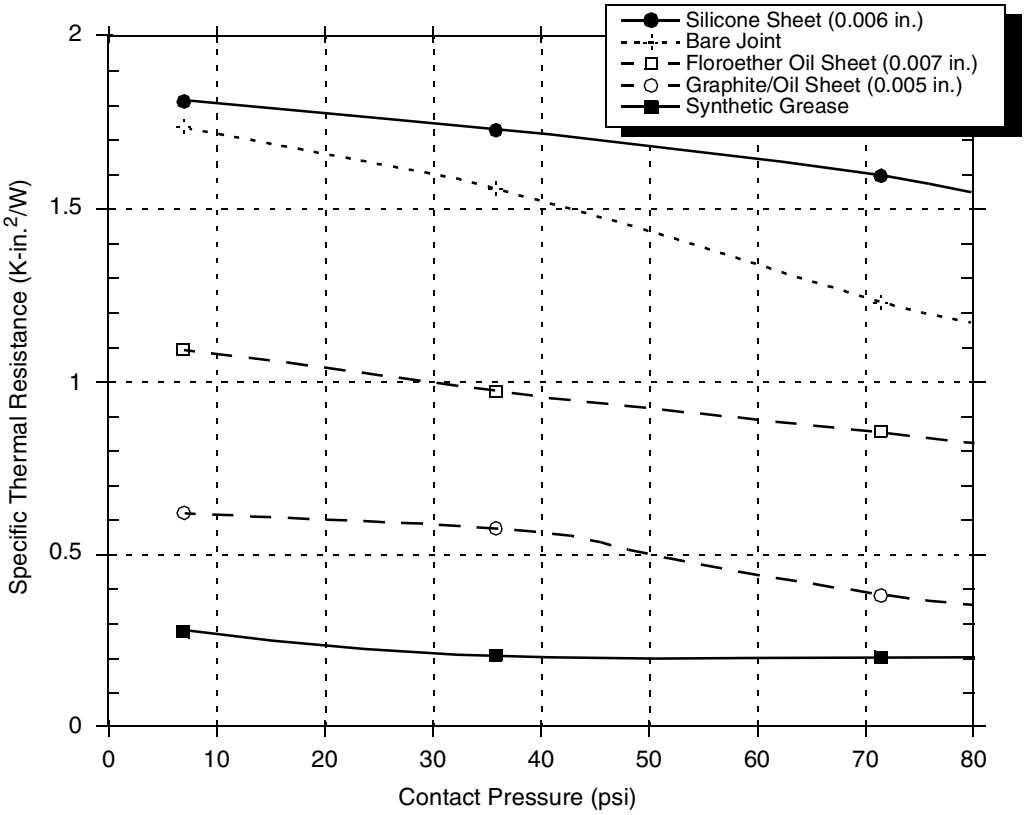

Figure 46. Thermal Performance of Select Thermal Interface Materials

The system board designer can choose between several types of thermal interface. There are several commercially-available thermal interfaces provided by the following vendors:

Chomerics, Inc. 77 Dragon Ct. Woburn, MA 01888-4014 Internet: www.chomerics.com	781-935-4850
Dow-Corning Corporation Dow-Corning Electronic Materials 2200 W. Salzburg Rd. Midland, MI 48686-0997 Internet: www.dowcorning.com	800-248-2481
Shin-Etsu MicroSi, Inc. 10028 S. 51st St. Phoenix, AZ 85044 Internet: www.microsi.com	888-642-7674
The Bergquist Company 18930 West 78th St.	800-347-4572

Chanhassen, MN 55317
Internet: www.bergquistcompany.com

Thermagon Inc. 888-246-9050
4707 Detroit Ave.
Cleveland, OH 44102
Internet: www.thermagon.com

16.2.4 Heat Sink Selection Examples

The following section provides a heat sink selection example using one of the commercially available heat sinks.

16.2.4.1 Case 1

For preliminary heat sink sizing, the die-junction temperature can be expressed as follows:

$$T_J = T_I + T_R + (\theta_{JC} + \theta_{INT} + \theta_{SA}) \times P_D$$

where

T_J is the die-junction temperature

T_I is the inlet cabinet ambient temperature

T_R is the air temperature rise within the computer cabinet

θ_{JC} is the junction-to-case thermal resistance

θ_{INT} is the adhesive or interface material thermal resistance

θ_{SA} is the heat sink base-to-ambient thermal resistance

P_D is the power dissipated by the device. See Table 4 and Table 5.

During operation the die-junction temperatures (T_J) should be maintained within the range specified in Table 2. The temperature of air cooling the component greatly depends on the ambient inlet air temperature and the air temperature rise within the electronic cabinet. An electronic cabinet inlet-air temperature (T_A) may range from 30° to 40°C. The air temperature rise within a cabinet (T_R) may be in the range of 5° to 10°C. The thermal resistance of some thermal interface material (θ_{INT}) may be about 1°C/W. For the purposes of this example, the θ_{JC} value given in Table 49 that includes the thermal grease interface and is documented in note 4 is used. If a thermal pad is used, θ_{INT} must be added.

Assuming a T_I of 30°C, a T_R of 5°C, a FC-PBGA package θ_{JC} = 0.96, and a power consumption (P_D) of 8.0 W, the following expression for T_J is obtained:

$$\text{Die-junction temperature: } T_J = 30°C + 5°C + (0.96°C/W + \theta_{SA}) \times 8.0\ W$$

The heat sink-to-ambient thermal resistance (θ_{SA}) versus airflow velocity for a Thermalloy heat sink #2328B is shown in Figure 47.

Assuming an air velocity of 2 m/s, we have an effective θ_{SA+} of about 3.3°C/W, thus

$$T_J = 30°C + 5°C + (0.96°C/W + 3.3°C/W) \times 8.0\ W,$$

resulting in a die-junction temperature of approximately 69°C which is well within the maximum operating temperature of the component.

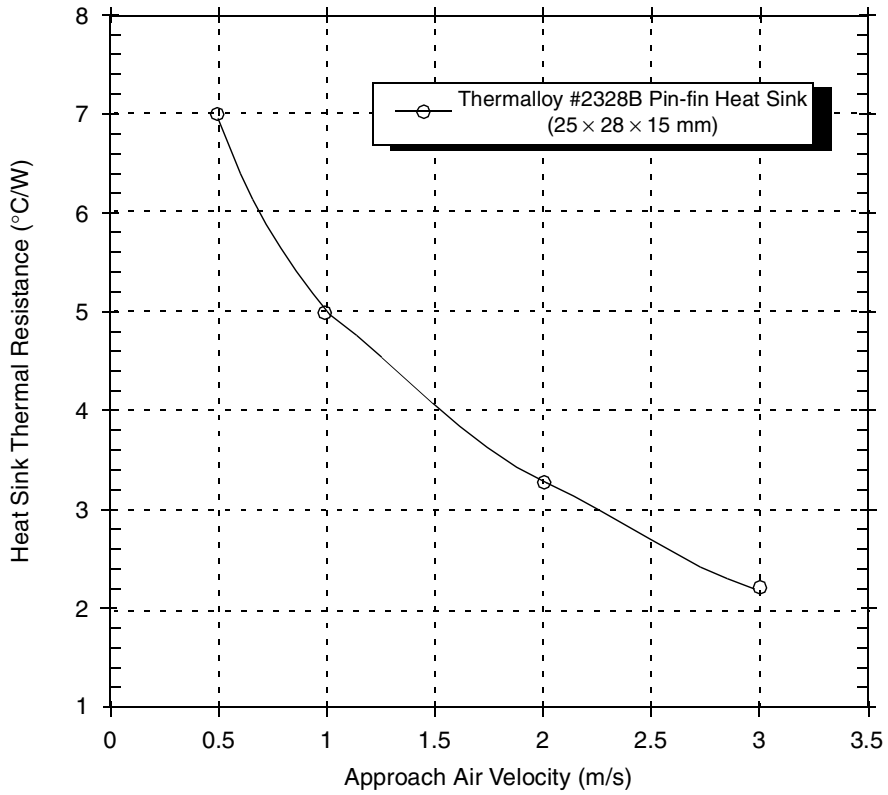

Figure 47. Thermalloy #2328B Heat Sink-to-Ambient Thermal Resistance Versus Airflow Velocity

16.2.4.2 Case 2

Every system application has different conditions that the thermal management solution must solve. As an alternate example, assume that the air reaching the component is 85 °C with an approach velocity of 1 m/sec. For a maximum junction temperature of 105 °C at 8 W, the total thermal resistance of junction to case thermal resistance plus thermal interface material plus heat sink thermal resistance must be less than 2.5 °C/W. The value of the junction to case thermal resistance in Table 49 includes the thermal interface resistance of a thin layer of thermal grease as documented in footnote 4 of the table. Assuming that the heat sink is flat enough to allow a thin layer of grease or phase change material, then the heat sink must be less than 1.5 °C/W.

Millennium Electronics (MEI) has tooled a heat sink MTHERM-1051 for this requirement assuming a compactPCI environment at 1 m/sec and a heat sink height of 12 mm. The MEI solution is illustrated in Figure 48 and Figure 49. This design has several significant advantages:

- The heat sink is clipped to a plastic frame attached to the application board with screws or plastic inserts at the corners away from the primary signal routing areas.
- The heat sink clip is designed to apply the force holding the heat sink in place directly above the die at a maximum force of less than 10 lbs.
- For applications with significant vibration requirements, silicone damping material can be applied between the heat sink and plastic frame.

The spring mounting should be designed to apply the force only directly above the die. By localizing the force, rocking of the heat sink is minimized. One suggested mounting method attaches a plastic fence to the board to provide the structure on which the heat sink spring clips. The plastic fence also provides the opportunity to minimize the holes in the printed-circuit board and to locate them at the corners of the package. Figure 48 and provide exploded views of the plastic fence, heat sink, and spring clip.

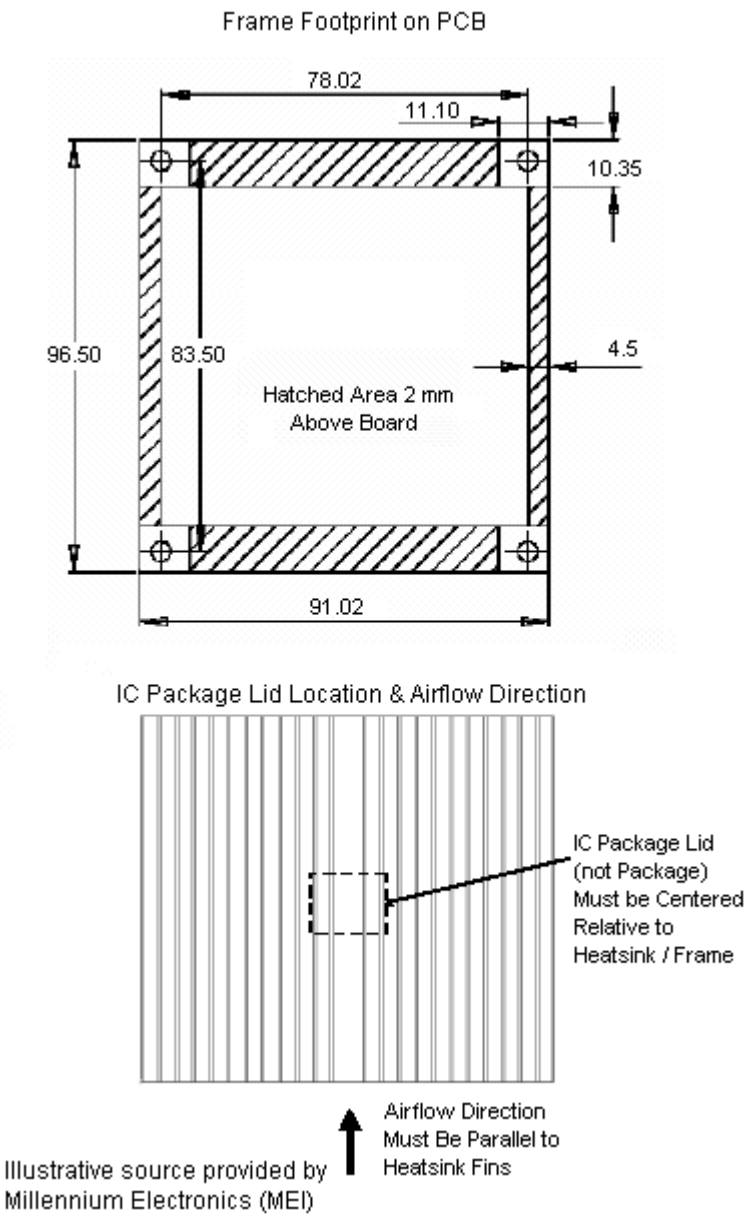

Figure 48. Exploded Views (1) of a Heat Sink Attachment using a Plastic Fence

Item No	QTY	MEI PN	Description
1	1	MFRAME-2000	HEATSINK FRAME
2	1	MSNK-1120	EXTRUDED HEATSINK
3	1	MCLIP-1013	CLIP
4	4	MPPINS-1000	FRAME ATTACHMENT PINS

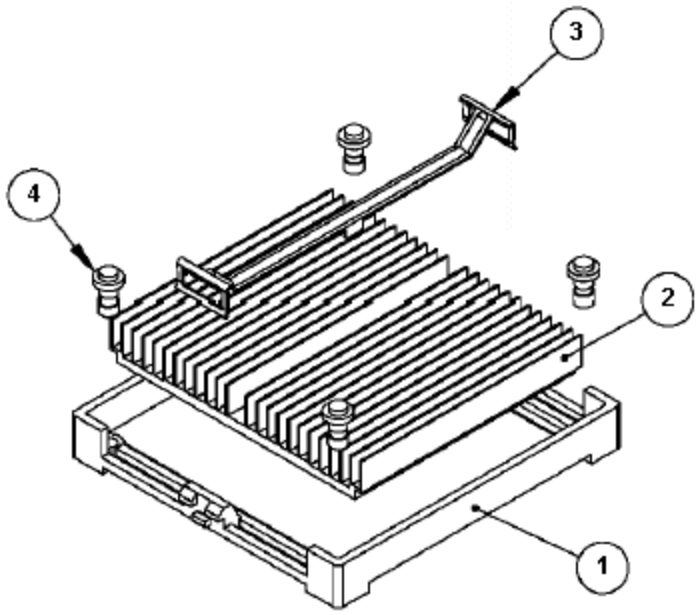

Illustrative source provided by
Millennium Electronics (MEI)

Figure 49. Exploded Views (2) of a Heat Sink Attachment using a Plastic Force

The die junction-to-ambient and the heat sink-to-ambient thermal resistances are common figure-of-merits used for comparing the thermal performance of various microelectronic packaging technologies, one should exercise caution when only using this metric in determining thermal management because no single parameter can adequately describe three-dimensional heat flow. The final die-junction operating temperature is not only a function of the component-level thermal resistance, but the system level design and its operating conditions. In addition to the component's power consumption, a number of factors affect the final operating die-junction temperature: airflow, board population (local heat flux of adjacent components), system air temperature rise, altitude, etc.

Due to the complexity and the many variations of system-level boundary conditions for today's microelectronic equipment, the combined effects of the heat transfer mechanisms (radiation convection and conduction) may vary widely. For these reasons, we recommend using conjugate heat transfer models for the boards, as well as, system-level designs.

17 System Design Information

This section provides electrical and thermal design recommendations for successful application of the MPC8555E.

17.1 System Clocking

The MPC8555E includes five PLLs.

1. The platform PLL ($AV_{DD}1$) generates the platform clock from the externally supplied SYSCLK input. The frequency ratio between the platform and SYSCLK is selected using the platform PLL ratio configuration bits as described in Section 15.2, “Platform/System PLL Ratio.”
2. The e500 Core PLL ($AV_{DD}2$) generates the core clock as a slave to the platform clock. The frequency ratio between the e500 core clock and the platform clock is selected using the e500 PLL ratio configuration bits as described in Section 15.3, “e500 Core PLL Ratio.”
3. The CPM PLL ($AV_{DD}3$) is slaved to the platform clock and is used to generate clocks used internally by the CPM block. The ratio between the CPM PLL and the platform clock is fixed and not under user control.
4. The PCI1 PLL ($AV_{DD}4$) generates the clocking for the first PCI bus.
5. The PCI2 PLL ($AV_{DD}5$) generates the clock for the second PCI bus.

17.2 PLL Power Supply Filtering

Each of the PLLs listed above is provided with power through independent power supply pins ($AV_{DD}1$, $AV_{DD}2$, $AV_{DD}3$, $AV_{DD}4$, and $AV_{DD}5$ respectively). The AV_{DD} level should always be equivalent to V_{DD}, and preferably these voltages are derived directly from V_{DD} through a low frequency filter scheme such as the following.

There are a number of ways to reliably provide power to the PLLs, but the recommended solution is to provide five independent filter circuits as illustrated in Figure 50, one to each of the five AV_{DD} pins. By providing independent filters to each PLL the opportunity to cause noise injection from one PLL to the other is reduced.

This circuit is intended to filter noise in the PLLs resonant frequency range from a 500 kHz to 10 MHz range. It should be built with surface mount capacitors with minimum Effective Series Inductance (ESL). Consistent with the recommendations of Dr. Howard Johnson in *High Speed Digital Design: A Handbook of Black Magic* (Prentice Hall, 1993), multiple small capacitors of equal value are recommended over a single large value capacitor.

Each circuit should be placed as close as possible to the specific AV_{DD} pin being supplied to minimize noise coupled from nearby circuits. It should be possible to route directly from the capacitors to the AV_{DD} pin, which is on the periphery of the 783 FC-PBGA footprint, without the inductance of vias.

Figure 50 shows the PLL power supply filter circuit.

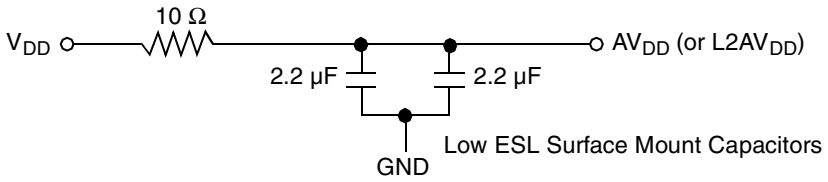

Figure 50. PLL Power Supply Filter Circuit

17.3 Decoupling Recommendations

Due to large address and data buses, and high operating frequencies, the MPC8555E can generate transient power surges and high frequency noise in its power supply, especially while driving large capacitive loads. This noise must be prevented from reaching other components in the MPC8555E system, and the MPC8555E itself requires a clean, tightly regulated source of power. Therefore, it is recommended that the system designer place at least one decoupling capacitor at each V_{DD}, OV_{DD}, GV_{DD}, and LV_{DD} pins of the MPC8555E. These decoupling capacitors should receive their power from separate V_{DD}, OV_{DD}, GV_{DD}, LV_{DD}, and GND power planes in the PCB, utilizing short traces to minimize inductance. Capacitors may be placed directly under the device using a standard escape pattern. Others may surround the part.

These capacitors should have a value of 0.01 or 0.1 µF. Only ceramic SMT (surface mount technology) capacitors should be used to minimize lead inductance, preferably 0402 or 0603 sizes.

In addition, it is recommended that there be several bulk storage capacitors distributed around the PCB, feeding the V_{DD}, OV_{DD}, GV_{DD}, and LV_{DD} planes, to enable quick recharging of the smaller chip capacitors. These bulk capacitors should have a low ESR (equivalent series resistance) rating to ensure the quick response time necessary. They should also be connected to the power and ground planes through two vias to minimize inductance. Suggested bulk capacitors—100–330 µF (AVX TPS tantalum or Sanyo OSCON).

17.4 Connection Recommendations

To ensure reliable operation, it is highly recommended to connect unused inputs to an appropriate signal level. Unused active low inputs should be tied to OV_{DD}, GV_{DD}, or LV_{DD} as required. Unused active high inputs should be connected to GND. All NC (no-connect) signals must remain unconnected.

Power and ground connections must be made to all external V_{DD}, GV_{DD}, LV_{DD}, OV_{DD}, and GND pins of the MPC8555E.

17.5 Output Buffer DC Impedance

The MPC8555E drivers are characterized over process, voltage, and temperature. For all buses, the driver is a push-pull single-ended driver type (open drain for I^2C).

To measure Z_0 for the single-ended drivers, an external resistor is connected from the chip pad to OV_{DD} or GND. Then, the value of each resistor is varied until the pad voltage is $OV_{DD}/2$ (see Figure 51). The output impedance is the average of two components, the resistances of the pull-up and pull-down devices.

When data is held high, SW1 is closed (SW2 is open) and R_P is trimmed until the voltage at the pad equals $OV_{DD}/2$. R_P then becomes the resistance of the pull-up devices. R_P and R_N are designed to be close to each other in value. Then, $Z_0 = (R_P + R_N)/2$.

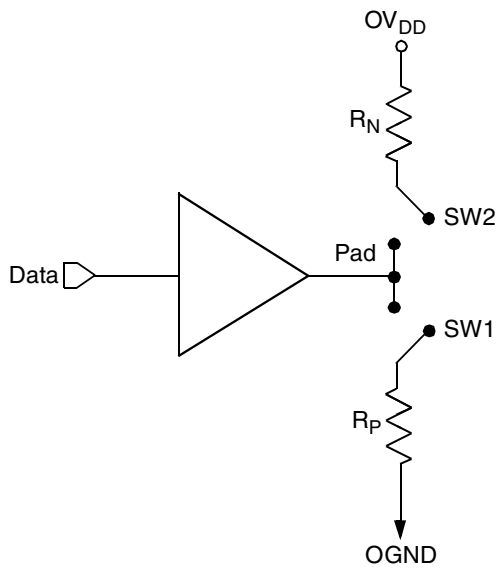

Figure 51. Driver Impedance Measurement

The value of this resistance and the strength of the driver's current source can be found by making two measurements. First, the output voltage is measured while driving logic 1 without an external differential termination resistor. The measured voltage is $V_1 = R_{source} \times I_{source}$. Second, the output voltage is measured while driving logic 1 with an external precision differential termination resistor of value R_{term}. The measured voltage is $V_2 = 1/(1/R_1 + 1/R_2)) \times I_{source}$. Solving for the output impedance gives $R_{source} = R_{term} \times (V_1/V_2 - 1)$. The drive current is then $I_{source} = V_1/R_{source}$.

Table 50 summarizes the signal impedance targets. The driver impedance are targeted at minimum V_{DD}, nominal OV_{DD}, 105°C.

Table 50. Impedance Characteristics

Impedance	Local Bus, Ethernet, DUART, Control, Configuration, Power Management	PCI	DDR DRAM	Symbol	Unit
R_N	43 Target	25 Target	20 Target	Z_0	Ω
R_P	43 Target	25 Target	20 Target	Z_0	Ω
Differential	NA	NA	NA	Z_{DIFF}	Ω

Note: Nominal supply voltages. See Table 1, T_j = 105°C.

17.6 Configuration Pin Multiplexing

The MPC8555E provides the user with power-on configuration options which can be set through the use of external pull-up or pull-down resistors of 4.7 kΩ on certain output pins (see customer visible configuration pins). These pins are generally used as output only pins in normal operation.

While $\overline{\text{HRESET}}$ is asserted however, these pins are treated as inputs. The value presented on these pins while $\overline{\text{HRESET}}$ is asserted, is latched when $\overline{\text{HRESET}}$ deasserts, at which time the input receiver is disabled and the I/O circuit takes on its normal function. Most of these sampled configuration pins are equipped with an on-chip gated resistor of approximately 20 kΩ. This value should permit the 4.7-kΩ resistor to pull the configuration pin to a valid logic low level. The pull-up resistor is enabled only during $\overline{\text{HRESET}}$ (and for platform/system clocks after $\overline{\text{HRESET}}$ deassertion to ensure capture of the reset value). When the input receiver is disabled the pull-up is also, thus allowing functional operation of the pin as an output with minimal signal quality or delay disruption. The default value for all configuration bits treated this way has been encoded such that a high voltage level puts the device into the default state and external resistors are needed only when non-default settings are required by the user.

Careful board layout with stubless connections to these pull-down resistors coupled with the large value of the pull-down resistor should minimize the disruption of signal quality or speed for output pins thus configured.

The platform PLL ratio and e500 PLL ratio configuration pins are not equipped with these default pull-up devices.

17.7 Pull-Up Resistor Requirements

The MPC8555E requires high resistance pull-up resistors (10 kΩ is recommended) on open drain type pins.

Correct operation of the JTAG interface requires configuration of a group of system control pins as demonstrated in Figure 53. Care must be taken to ensure that these pins are maintained at a valid deasserted state under normal operating conditions as most have asynchronous behavior and spurious assertion give unpredictable results.

TSEC1_TXD[3:0] must not be pulled low during reset. Some PHY chips have internal pulldowns that could cause this to happen. If such PHY chips are used, then a pullup must be placed on these signals strong enough to restore these signals to a logical 1 during reset.

Refer to the PCI 2.2 specification for all pull-ups required for PCI.

17.8 JTAG Configuration Signals

Boundary-scan testing is enabled through the JTAG interface signals. The $\overline{\text{TRST}}$ signal is optional in the IEEE 1149.1 specification, but is provided on all processors that implement the Power Architecture. The device requires $\overline{\text{TRST}}$ to be asserted during reset conditions to ensure the JTAG boundary logic does not interfere with normal chip operation. While it is possible to force the TAP controller to the reset state using only the TCK and TMS signals, generally systems assert $\overline{\text{TRST}}$ during the power-on reset flow. Simply tying $\overline{\text{TRST}}$ to $\overline{\text{HRESET}}$ is not practical because the JTAG interface is also used for accessing the common on-chip processor (COP) function.

The COP function of these processors allow a remote computer system (typically, a PC with dedicated hardware and debugging software) to access and control the internal operations of the processor. The COP interface connects primarily through the JTAG port of the processor, with some additional status monitoring signals. The COP port requires the ability to independently assert $\overline{\text{HRESET}}$ or $\overline{\text{TRST}}$ in order to fully control the processor. If the target system has independent reset sources, such as voltage monitors, watchdog timers, power supply failures, or push-button switches, then the COP reset signals must be merged into these signals with logic.

The arrangement shown in Figure 52 allows the COP port to independently assert $\overline{\text{HRESET}}$ or $\overline{\text{TRST}}$, while ensuring that the target can drive $\overline{\text{HRESET}}$ as well.

The COP interface has a standard header, shown in Figure 52, for connection to the target system, and is based on the 0.025" square-post, 0.100" centered header assembly (often called a Berg header). The connector typically has pin 14 removed as a connector key.

The COP header adds many benefits such as breakpoints, watchpoints, register and memory examination/modification, and other standard debugger features. An inexpensive option can be to leave the COP header unpopulated until needed.

There is no standardized way to number the COP header; consequently, many different pin numbers have been observed from emulator vendors. Some are numbered top-to-bottom then left-to-right, while others use left-to-right then top-to-bottom, while still others number the pins counter clockwise from pin 1 (as with an IC). Regardless of the numbering, the signal placement recommended in Figure 52 is common to all known emulators.

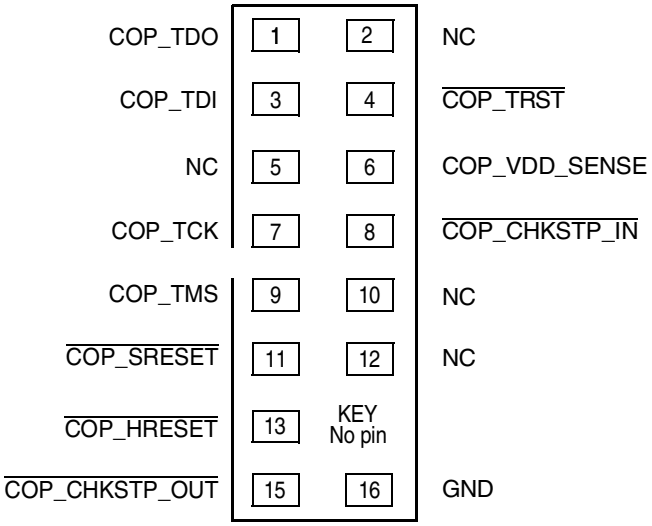

Figure 52. COP Connector Physical Pinout

17.8.1 Termination of Unused Signals

If the JTAG interface and COP header are not used, Freescale recommends the following connections:

- $\overline{\text{TRST}}$ should be tied to $\overline{\text{HRESET}}$ through a 0 kΩ isolation resistor so that it is asserted when the system reset signal ($\overline{\text{HRESET}}$) is asserted, ensuring that the JTAG scan chain is initialized during the power-on reset flow. Freescale recommends that the COP header be designed into the system as shown in Figure 53. If this is not possible, the isolation resistor allows future access to $\overline{\text{TRST}}$ in case a JTAG interface may need to be wired onto the system in future debug situations.
- Tie TCK to OV_{DD} through a 10 kΩ resistor. This prevents TCK from changing state and reading incorrect data into the device.
- No connection is required for TDI, TMS, or TDO.

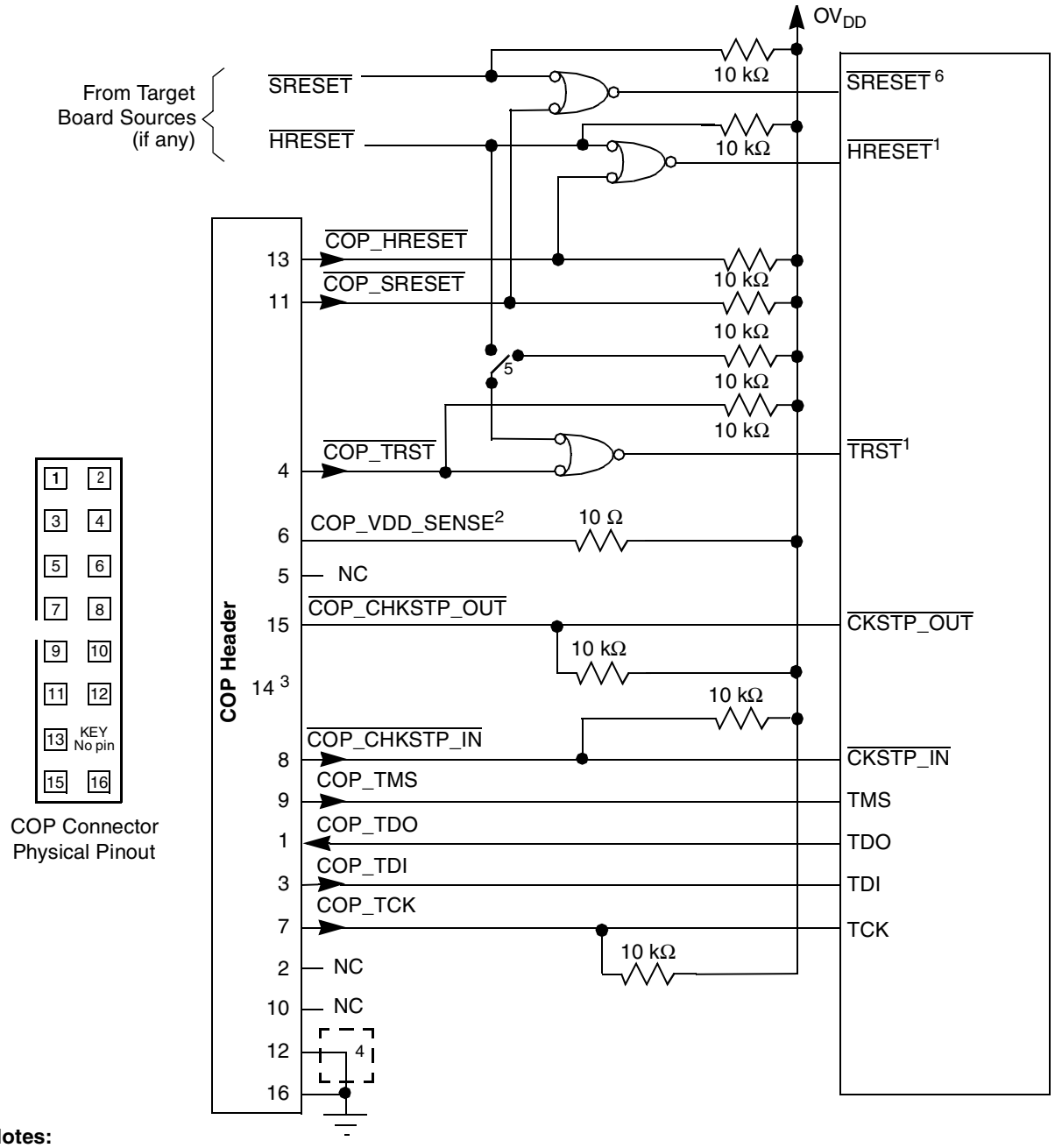

Notes:

1. The COP port and target board should be able to independently assert $\overline{\text{HRESET}}$ and $\overline{\text{TRST}}$ to the processor in order to fully control the processor as shown here.
2. Populate this with a 10 Ω resistor for short-circuit/current-limiting protection.
3. The KEY location (pin 14) is not physically present on the COP header.
4. Although pin 12 is defined as a No-Connect, some debug tools may use pin 12 as an additional GND pin for improved signal integrity.
5. This switch is included as a precaution for BSDL testing. The switch should be open during BSDL testing to avoid accidentally asserting the $\overline{\text{TRST}}$ line. If BSDL testing is not being performed, this switch should be closed or removed.
6. Asserting $\overline{\text{SRESET}}$ causes a machine check interrupt to the e500 core.

Figure 53. JTAG Interface Connection

18 Document Revision History

Table 51 provides a revision history for this hardware specification.

Table 51. Document Revision History

Rev. No.	Date	Substantive Change(s)
4.2	1/2008	Added “Note: Rise/Fall Time on CPM Input Pins” and following note text to Section 10.2, “CPM AC Timing Specifications.”
4.1	7/2007	Inserted Figure 3, ““Maximum AC Waveforms on PCI interface for 3.3-V Signaling.”
4	12/2006	Updated Section 2.1.2, “Power Sequencing.” Updated back page information.
3.2	11/2006	Updated Section 2.1.2, “Power Sequencing.” Replaced Section 17.8, “JTAG Configuration Signals.”
3.1	10/2005	Added footnote 2 about junction temperature in Table 4. Added max. power values for 1000 MHz core frequency in Table 4. Removed Figure 3, “Maximum AC Waveforms on PCI Interface for 3.3-V Signaling.” Modified note to $t_{LBKSKEW}$ from 8 to 9 in Table 30. Changed $t_{LBKHOZ1}$ and $t_{LBKHOV2}$ values inTable 30. Added note 3 to $t_{LBKHOV1}$ in Table 30. Modified note 3 in Table 30 and Table 31. Added note 3 to $t_{LBKLOV1}$ in Table 31. Modified values for t_{LBKHKT}, $t_{LBKLOV1}$, $t_{LBKLOV2}$, $t_{LBKLOV3}$, $t_{LBKLOZ1}$, and $t_{LBKLOZ2}$ in Table 31. Changed Input Signals: LAD[0:31]/LDP[0:3] in Figure 21. Modified note for signal CLK_OUT in Table 43. PCI1_CLK and PCI2_CLK changed from I/O to I in Table 43. Added column for Encryption Acceleration in Table 52.
3	8/2005	Modified max. power values in Table 4. Modified notes for signals TSEC1_TXD[3:0], TSEC2_TXD[3:0], TRIG_OUT/READY, MSRCID4, CLK_OUT, and MDVAL in Table 43.
2	8/2005	Previous revision’s history listed incorrect cross references. Table 2 is now correctly listed as Table 27 and Table 38 is now listed as Table 31. Added note 2 in Table 7. Modified min and max values for t_{DDKHMP} in Table 14.
1	6/2005	Changed LV_{dd} to OV_{dd} for the supply voltage Ethernet management interface in Table 27. Modified footnote 4 and changed typical power for the 1000 MHz core frequency inTable 4. Corrected symbols for body rows 9–15, effectively changing them from a high state to a low state in Table 31.
0	6/2005	Initial release.

19 Device Nomenclature

Ordering information for the parts fully covered by this specification document is provided in Section 19.1, “Nomenclature of Parts Fully Addressed by this Document.”

19.1 Nomenclature of Parts Fully Addressed by this Document

Table 52 provides the Freescale part numbering nomenclature for the MPC8555E. Note that the individual part numbers correspond to a maximum processor core frequency. For available frequencies, contact your local Freescale sales office. In addition to the processor frequency, the part numbering scheme also includes an application modifier which may specify special application conditions. Each part number also contains a revision code which refers to the die mask revision number.

Table 52. Part Numbering Nomenclature

MPC	***nnnn***		***t***	***pp***	***aa***	***a***	***r***
Product Code	**Part Identifier**	**Encryption Acceleration**	**Temperature Range[1]**	**Package [2]**	**Processor Frequency [3]**	**Platform Frequency**	**Revision Level[4]**
MPC	8555	Blank = not included E = included	Blank = 0 to 105°C C = –40 to 105°C	PX = FC-PBGA VT = FC-PBGA (lead free)	AJ = 533 MHz AK = 600 MHz AL = 667 MHz AP = 833 MHz AQ = 1000 MHZ	D = 266 MHz E = 300 MHz F = 333 MHz	

Notes:

1. For Temperature Range=C, Processor Frequency is limited to 667 MHz with a Platform Frequency selector of 333 MHz, Processor Frequency is limited to 533 MHz with a Platform Frequency selector of 266 MHz.
2. See Section 14, “Package and Pin Listings,” for more information on available package types.
3. Processor core frequencies supported by parts addressed by this specification only. Not all parts described in this specification support all core frequencies. Additionally, parts addressed by Part Number Specifications may support other maximum core frequencies.
4. Contact you local Freescale field applications engineer (FAE).

19.2 Part Marking

Parts are marked as the example shown in Figure 54.

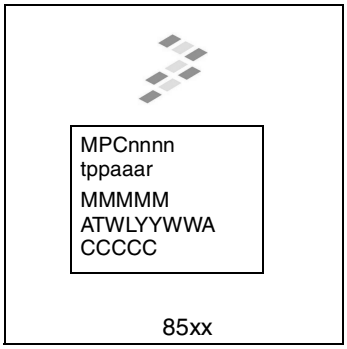

FC-PBGA

Notes:

MMMMM is the 5-digit mask number.
ATWLYYWWA is the traceability code.
CCCCC is the country of assembly. This space is left blank if parts are assembled in the United States.

Figure 54. Part Marking for FC-PBGA Device

How to Reach Us:

Home Page:
www.freescale.com

Web Support:
http://www.freescale.com/support

USA/Europe or Locations Not Listed:
Freescale Semiconductor, Inc.
Technical Information Center, EL516
2100 East Elliot Road
Tempe, Arizona 85284
+1-800-521-6274 or
+1-480-768-2130
www.freescale.com/support

Europe, Middle East, and Africa:
Freescale Halbleiter Deutschland GmbH
Technical Information Center
Schatzbogen 7
81829 Muenchen, Germany
+44 1296 380 456 (English)
+46 8 52200080 (English)
+49 89 92103 559 (German)
+33 1 69 35 48 48 (French)
www.freescale.com/support

Japan:
Freescale Semiconductor Japan Ltd.
Headquarters
ARCO Tower 15F
1-8-1, Shimo-Meguro, Meguro-ku
Tokyo 153-0064
Japan
0120 191014 or
+81 3 5437 9125
support.japan@freescale.com

Asia/Pacific:
Freescale Semiconductor Hong Kong Ltd.
Technical Information Center
2 Dai King Street
Tai Po Industrial Estate
Tai Po, N.T., Hong Kong
+800 2666 8080
support.asia@freescale.com

For Literature Requests Only:
Freescale Semiconductor
Literature Distribution Center
P.O. Box 5405
Denver, Colorado 80217
+1-800 441-2447 or
+1-303-675-2140
Fax: +1-303-675-2150
LDCForFreescaleSemiconductor
@hibbertgroup.com

Information in this document is provided solely to enable system and software implementers to use Freescale Semiconductor products. There are no express or implied copyright licenses granted hereunder to design or fabricate any integrated circuits or integrated circuits based on the information in this document.

Freescale Semiconductor reserves the right to make changes without further notice to any products herein. Freescale Semiconductor makes no warranty, representation or guarantee regarding the suitability of its products for any particular purpose, nor does Freescale Semiconductor assume any liability arising out of the application or use of any product or circuit, and specifically disclaims any and all liability, including without limitation consequential or incidental damages. “Typical” parameters which may be provided in Freescale Semiconductor data sheets and/or specifications can and do vary in different applications and actual performance may vary over time. All operating parameters, including “Typicals” must be validated for each customer application by customer’s technical experts. Freescale Semiconductor does not convey any license under its patent rights nor the rights of others. Freescale Semiconductor products are not designed, intended, or authorized for use as components in systems intended for surgical implant into the body, or other applications intended to support or sustain life, or for any other application in which the failure of the Freescale Semiconductor product could create a situation where personal injury or death may occur. Should Buyer purchase or use Freescale Semiconductor products for any such unintended or unauthorized application, Buyer shall indemnify and hold Freescale Semiconductor and its officers, employees, subsidiaries, affiliates, and distributors harmless against all claims, costs, damages, and expenses, and reasonable attorney fees arising out of, directly or indirectly, any claim of personal injury or death associated with such unintended or unauthorized use, even if such claim alleges that Freescale Semiconductor was negligent regarding the design or manufacture of the part.

Freescale™ and the Freescale logo are trademarks of Freescale Semiconductor, Inc. The Power Architecture and Power.org word marks and the Power and Power.org logos and related marks are trademarks and service marks licensed by Power.org. The described product contains a PowerPC processor core. The PowerPC name is a trademark of IBM Corp. and used under license. IEEE 802.3 and 1149.1 are registered trademarks of the Institute of Electrical and Electronics Engineers, Inc. (IEEE). This product is not endorsed or approved by the IEEE. All other product or service names are the property of their respective owners.

© Freescale Semiconductor, Inc., 2008. All rights reserved.

Document Number: MPC8555EEC
Rev. 4.2
1/2008

Looking for pricing, stock, or lifecycle information?

Click below to explore more details on WIN SOURCE:

- View MPC8555VTAQF on WIN SOURCE
- NXP / Nexperia Information

Optimize Your Supply Chain with WIN SOURCE Solutions

- Global Sourcing Solution
- Obsolete Management
- Cost Control Management
- Shortage Management
- Alternative Solution
- Excess Inventory Management