## Overview

The KEMET T491, designed specifically for today's highly automated surface mount processes and equipment, is the leading choice for surface mount designs. The T491 combines KEMET's proven solid tantalum technology, acclaimed and respected throughout the world, with the latest in materials, processes, and automation, resulting in unsurpassed total performance and value. This product meets or exceeds the requirements of EIA standard 535BAAC. The T491 is classified as moisture sensitivity level (MSL) 1 under J STD 020, with unlimited floor life time at ≤ 30°C/85% RH. The T491 standard terminations are available in 100% matte tin and provide excellent wetting characteristics and compatibility with today's surface mount solder systems. Tin/lead (Sn/Pb) terminations are available upon request for any part number. Gold-plated terminations are also available for use with conductive epoxy attachment processes. Standard packaging of these devices is Tape & Reel in accordance with EIA 481. This system provides perfect compatibility with all tape-fed placement units.

## Benefits

- Meets or exceeds EIA Standard 535BAAC
- Tape & Reel standard packaging per EIA 481
- Symmetrical, compliant terminations
- Optional gold-plated terminations
- Laser-marked case
- 100% surge current test on C, D, E, U, V, and X sizes
- Halogen free epoxy
- Capacitance 0.1 – 1,000 µF
- Tolerance ±10%, ±20%
- Voltage 2.5 – 50 VDC
- Extended range values
- Low profile case sizes
- RoHS compliant and lead-free terminations
- Operating temperature range of −55°C to +125°C

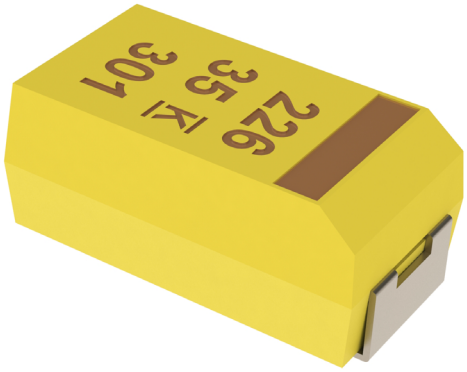


## Applications

Typical applications include decoupling and filtering in many end applications, such as DC/DC converters, portable electronics, telecommunications, and control units.

## Environmental Compliance

RoHS compliant (6/6) according to Directive 2002/95/EC when ordered with 100% Sn solder, Gold-plated or Non-magnetic 100% Sn solder.

- Halogen-free
- Epoxy compliant with UL94 V-0
- Molded Epoxy complies for outgassing testing under ASTM E 595.

## K-SIM

For a detailed analysis of specific part numbers, please visit ksim.kemet.com to access KEMET's K-SIM software. KEMET K-SIM is designed to simulate behavior of components with respect to frequency, ambient temperature, and DC bias levels.

## Ordering Information

| T | 491 | X | 157 | K | 020 | A | T | |
|---|---|---|---|---|---|---|---|---|
| Capacitor Class | Series | Case Size | Capacitance Code (pF) | Capacitance Tolerance | Rated Voltage (VDC) | Failure Rate/ Design | Termination Finish | Packaging (C-Spec) |
| T = Tantalum | Industrial | A, B, C, D, E, M, S, T, U, V, W, X | First two digits represent significant figures. Third digit specifies number of zeros. | K = ±10%<br>M = ±20% | 2R5 = 2.5<br>003 = 3<br>004 = 4<br>006 = 6.3<br>010 = 10<br>016 = 16<br>020 = 20<br>025 = 25<br>035 = 35<br>050 = 50 | A = N/A | T = 100% Matte tin (Sn)-plated<br>H = Standard solder coated (SnPb 5% Pb minimum)<br>G = Gold-plated (A, B, C, D, X only)<br>N = Non-magnetic 100% tin (Sn)<br>M = Non-magnetic (SnPb) | Blank = 7" reel<br>7280 = 13" reel |

## Performance Characteristics

| Item | Performance Characteristics |
|---|---|
| Operating Temperature | −55°C to 125°C |
| Rated Capacitance Range | 0.1 – 1,000 µF at 120 Hz/25°C |
| Capacitance Tolerance | K tolerance (10%), M tolerance (20%) |
| Rated Voltage Range | 2.5 – 50 V |
| DF (120 Hz) | Refer to Part Number Electrical Specification Table |
| ESR (100 kHz) | Refer to Part Number Electrical Specification Table |
| Leakage Current | ≤ 0.01 CV (µA) at rated voltage after 5 minutes |

## Qualification

| Test | Condition | | Characteristics | | | |
|---|---|---|---|---|---|---|
| Endurance | 85°C at rated voltage, 2,000 hours<br>125°C at 2/3 rated voltage, 2,000 hours | | Δ C/C | Within ±10% of initial value | | |
| | | | DF | Within initial limits | | |
| | | | DCL | Within 1.25 x initial limit | | |
| | | | ESR | Within initial limits | | |
| Storage Life | 125°C at 0 volts, 2,000 hours | | Δ C/C | Within ±10% of initial value | | |
| | | | DF | Within initial limits | | |
| | | | DCL | Within 1.25 x initial limit | | |
| | | | ESR | Within initial limits | | |
| Thermal Shock | MIL-STD-202, Method 107, Condition B, mounted, −55°C to 125°C, 1,000 cycles | | Δ C/C | Within ±5% of initial value | | |
| | | | DF | Within initial limits | | |
| | | | DCL | Within 1.25 x initial limit | | |
| | | | ESR | Within initial limits | | |
| Temperature Stability | Extreme temperature exposure at a succession of continuous steps at +25°C, −55°C, +25°C, +85°C, +125°C, +25°C. | | +25°C | −55°C | +85°C | +125°C |
| | | Δ C/C | IL* | ±10% | ±10% | ±20% |
| | | DF | IL | IL | 1.5 x IL | 1.5 x IL |
| | | DCL | IL | N/A | 10 x IL | 12 x IL |
| Surge Voltage | 85°C, 1.32 x rated voltage 1,000 cycles (125°C, 1.2 x rated voltage). | | Δ C/C | Within ±5% of initial value | | |
| | | | DF | Within initial limits | | |
| | | | DCL | Within initial limits | | |
| | | | ESR | Within initial limits | | |
| Mechanical Shock/ Vibration | MIL-STD-202, Method 213, Condition I, 100 G peak<br>MIL-STD-202, Method 204, Condition D, 10 Hz to 2,000 Hz, 20 G peak | | Δ C/C | Within ±10% of initial value | | |
| | | | DF | Within initial limits | | |
| | | | DCL | Within initial limits | | |

**IL = Initial limit*

## ESR vs. Frequency

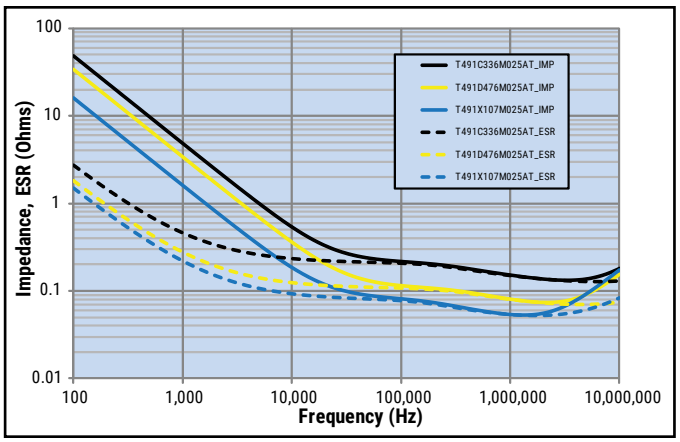


## Capacitance vs. Frequency

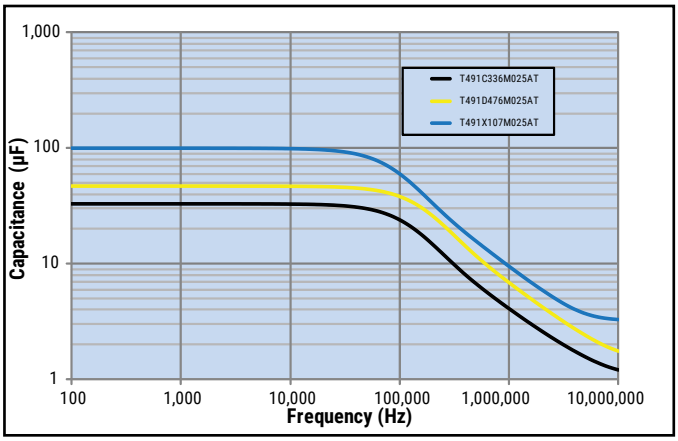


## Dimensions – Millimeters (Inches)

Metric will govern

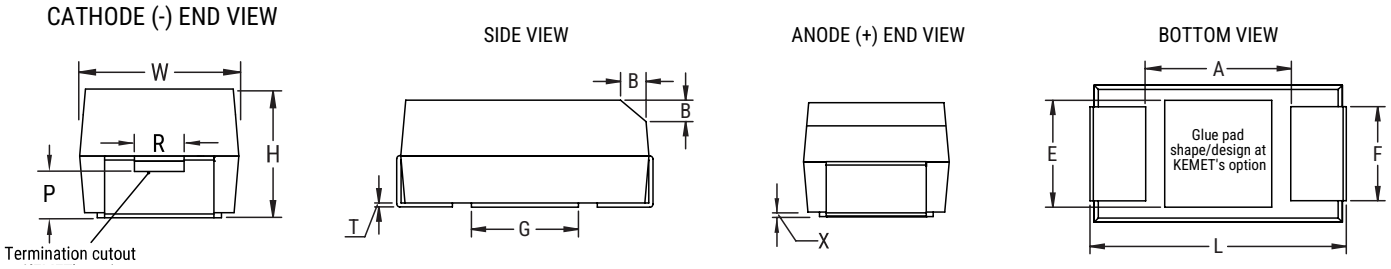


| Case Size | | Component | | | | | | | | | | | | |
|---|---|---|---|---|---|---|---|---|---|---|---|---|---|---|
| KEMET | EIA | L | W | H | F ±0.1 ±(0.004) | S | B ±0.15 (Ref)±0.006 | X (Ref) | P (Ref) | R (Ref) | T (Ref) | A (Min) | G (Ref) | E (Ref) |
| A | 3216–18 | 3.2 ±0.2 (0.126 ±0.008) | 1.6 ±0.2 (0.063 ±0.008) | 1.6 ±0.2 (0.063 ±0.008) | 1.2 (0.047) | 0.80(0.032) +0.2(0.008)/−0.3(0.011) | 0.4 (0.016) | 0.10 ±0.10 (0.004 ±0.004) | 0.4 (0.016) | 0.4 (0.016) | 0.13 (0.005) | 1.2 (0.047) | 1.1 (0.043) | 1.3 (0.051) |
| B | 3528–21 | 3.5 ±0.2 (0.138 ±0.008) | 2.8 ±0.2 (0.110 ±0.008) | 1.9 ±0.2 (0.075 ±0.008) | 2.2 (0.087) | 0.80(0.032) +0.1(0.004)/−0.3(0.011) | 0.4 (0.016) | 0.10 ±0.10 (0.004 ±0.004) | 0.5 (0.020) | 1.0 (0.039) | 0.13 (0.005) | 1.9 (0.075) | 1.8 (0.071) | 2.2 (0.087) |
| C | 6032–28 | 6.0 ±0.3 (0.236 ±0.012) | 3.2 ±0.3 (0.126 ±0.012) | 2.5 ±0.3 (0.098 ±0.012) | 2.2 (0.087) | 1.30 (0.051) ±0.3 (0.011) | 0.5 (0.020) | 0.10 ±0.10 (0.004 ±0.004) | 0.9 (0.035) | 1.0 (0.039) | 0.13 (0.005) | 2.9 (0.114) | 2.8 (0.110) | 2.4 (0.094) |
| D | 7343–31 | 7.3 ±0.3 (0.287 ±0.012) | 4.3 ±0.3 (0.169 ±0.012) | 2.8 ±0.3 (0.110 ±0.012) | 2.4 (0.094) | 1.30 (0.051) ±0.3 (0.011) | 0.5 (0.020) | 0.10 ±0.10 (0.004 ±0.004) | 0.9 (0.035) | 1.0 (0.039) | 0.13 (0.005) | 3.6 (0.142) | 3.5 (0.138) | 3.5 (0.138) |
| X | 7343–43 | 7.3 ±0.3 (0.287 ±0.012) | 4.3 ±0.3 (0.169 ±0.012) | 4.0 ±0.3 (0.157 ±0.012) | 2.4 (0.094) | 1.30 (0.051) ±0.3 (0.011) | 0.5 (0.020) | 0.10 ±0.10 (0.004 ±0.004) | 1.7 (0.067) | 1.0 (0.039) | 0.13 (0.005) | 3.6 (0.142) | 3.5 (0.138) | 3.5 (0.138) |
| E | 7360–38 | 7.3 ±0.3 (0.287 ±0.012) | 6.0 ±0.3 (0.236 ±0.012) | 3.6 ±0.2 (0.142 ±0.008) | 4.1 (0.161) | 1.30 (0.051) ±0.3 (0.011) | 0.5 (0.020) | 0.10 ±0.10 (0.004 ±0.004) | N/A | N/A | 0.13 (0.005) | 3.6 (0.142) | 3.5 (0.138) | 3.5 (0.138) |
| M | 3528–15 | 3.5 ±0.2 (0.138 ±0.008) | 2.8 ±0.2 (0.110 ±0.008) | 1.4 ±0.1 (0.055 ±0.004) | 2.2 (.087) | 0.8 (0.031) | N/A | 0.05 (0.002) | N/A | N/A | 0.13 (.005) | 1.9 (0.075) | 1.8 (.071) | 2.2 (.087) |
| S | 3216–12 | 3.2 ±0.2 (0.126 ±0.008) | 1.6 ±0.2 (0.063 ±0.008) | 1.1 ±0.1 (0.043 ±0.004) | 1.2 (0.047) | 0.80(0.032) +0.2(0.008)/−0.3(0.011) | N/A | 0.05 (0.002) | N/A | N/A | 0.13 (0.005) | 1.2 (0.047) | 1.1 (0.043) | 1.3 (0.051) |
| T | 3528–12 | 3.5 ±0.2 (0.138 ±0.008) | 2.8 ±0.2 (0.110 ±0.008) | 1.1 ±0.1 (0.043 ±0.004) | 2.2 (0.087) | 0.80(0.032) +0.1(0.004)/−0.3(0.011) | N/A | 0.05 (0.002) | N/A | N/A | 0.13 (0.005) | 1.9 (0.075) | 1.8 (0.071) | 2.2 (0.087) |
| U | 6032–15 | 6.0 ±0.3 (0.236 ±0.012) | 3.2 ±0.2 (0.110 ±0.008) | 1.4 ±0.1 (0.055 ±0.004) | 2.2 (0.087) | 1.30 (0.051) ±0.3 (0.011) | N/A | 0.05 (0.002) | N/A | N/A | 0.13 (0.005) | 2.9 (0.114) | 2.8 (0.110) | 2.4 (0.094) |
| V | 7343–20 | 7.3 ±0.3 (0.287 ±0.012) | 4.3 ±0.3 (0.169 ±0.012) | 1.8 ±0.2 (0.071 ± 0.008) | 2.4 (0.094) | 1.30 (0.051) ±0.3 (0.011) | N/A | 0.05 (0.002) | N/A | N/A | 0.13 (0.005) | 3.6 (0.142) | 3.5 (0.138) | 3.5 (0.138) |
| W | 7343–15 | 7.3 ±0.3 (0.287 ±0.012) | 4.3 ±0.3 (0.169 ±0.012) | 1.4 ±0.1 (0.055 ±0.004) | 2.4 (0.094) | 1.30 (0.051) ±0.3 (0.011) | N/A | 0.05 (0.002) | N/A | N/A | 0.13 (0.005) | 3.6 (0.142) | 3.5 (.0138) | 3.5 (0.138) |

*Notes: (Ref) – Dimensions provided for reference only. For low profile cases, no dimensions are provided for B, P or R because these cases do not have a bevel or a notch.*

## Table 1 – Ratings & Part Number Reference

| Rated Voltage | Rated Cap | Case Code/ Case Size | KEMET Part Number | DC Leakage | DF | ESR | Maximum Allowable Ripple Current (rms) | | | Maximum Operating Temp | MSL |
|---|---|---|---|---|---|---|---|---|---|---|---|
| VDC at 85°C | µF | KEMET/EIA | (See below for part options) | µA at +25°C Maximum/ 5 Minutes | % at +25°C 120 Hz Maximum | Ω at +25°C 100 kHz Maximum | mA at +25°C 100 kHz | mA at +85°C 100 kHz | mA at +125°C 100 kHz | °C | Reflow Temp ≤ 260 °C |
| 2.5 | 100 | T/3528-12 | T491T107(1)2R5A(2) | 2.5 | 24.0 | 3.9 | 134 | 121 | 54 | 125 | 1 |
| 2.5 | 220 | D/7343-31 | T491D227(1)2R5A(2) | 5.5 | 8.0 | 0.3 | 707 | 636 | 283 | 125 | 1 |
| 3 | 33 | A/3216-18 | T491A336(1)003A(2) | 1.0 | 6.0 | 4.0 | 137 | 123 | 55 | 125 | 1 |
| 4 | 3.3 | A/3216-18 | T491A335(1)004A(2) | 0.5 | 6.0 | 8.0 | 97 | 87 | 39 | 125 | 1 |
| 4 | 4.7 | A/3216-18 | T491A475(1)004A(2) | 0.5 | 6.0 | 8.0 | 97 | 87 | 39 | 125 | 1 |
| 4 | 6.8 | A/3216-18 | T491A685(1)004A(2) | 0.5 | 6.0 | 6.0 | 112 | 101 | 45 | 125 | 1 |
| 4 | 6.8 | S/3216-12 | T491S685(1)004A(2) | 0.5 | 6.0 | 15.0 | 63 | 57 | 25 | 125 | 1 |
| 4 | 10 | B/3528-21 | T491B106(1)004A(2) | 0.5 | 6.0 | 3.5 | 156 | 140 | 62 | 125 | 1 |
| 4 | 10 | A/3216-18 | T491A106(1)004A(2) | 0.5 | 6.0 | 4.5 | 129 | 116 | 52 | 125 | 1 |
| 4 | 10 | S/3216-12 | T491S106(1)004A(2) | 0.5 | 6.0 | 15.0 | 63 | 57 | 25 | 125 | 1 |
| 4 | 15 | B/3528-21 | T491B156(1)004A(2) | 0.6 | 6.0 | 3.5 | 156 | 140 | 62 | 125 | 1 |
| 4 | 15 | A/3216-18 | T491A156(1)004A(2) | 0.6 | 6.0 | 4.0 | 137 | 123 | 55 | 125 | 1 |
| 4 | 15 | T/3528-12 | T491T156(1)004A(2) | 0.6 | 6.0 | 5.0 | 118 | 106 | 47 | 125 | 1 |
| 4 | 15 | S/3216-12 | T491S156(1)004A(2) | 0.6 | 10.0 | 15.0 | 63 | 57 | 25 | 125 | 1 |
| 4 | 22 | C/6032-28 | T491C226(1)004A(2) | 0.9 | 6.0 | 1.8 | 247 | 222 | 99 | 125 | 1 |
| 4 | 22 | B/3528-21 | T491B226(1)004A(2) | 0.9 | 6.0 | 3.0 | 168 | 151 | 67 | 125 | 1 |
| 4 | 22 | A/3216-18 | T491A226(1)004A(2) | 0.9 | 6.0 | 3.5 | 137 | 123 | 55 | 125 | 1 |
| 4 | 22 | T/3528-12 | T491T226(1)004A(2) | 0.9 | 6.0 | 5.0 | 118 | 106 | 47 | 125 | 1 |
| 4 | 22 | S/3216-12 | T491S226(1)004A(2) | 0.9 | 10.0 | 10.0 | 77 | 69 | 31 | 125 | 1 |
| 4 | 33 | C/6032-28 | T491C336(1)004A(2) | 1.3 | 6.0 | 1.8 | 247 | 222 | 99 | 125 | 1 |
| 4 | 33 | U/6032-15 | T491U336(1)004A(2) | 1.3 | 6.0 | 1.8 | 224 | 202 | 90 | 125 | 1 |
| 4 | 33 | B/3528-21 | T491B336(1)004A(2) | 1.3 | 6.0 | 2.5 | 184 | 166 | 74 | 125 | 1 |
| 4 | 33 | A/3216-18 | T491A336(1)004A(2) | 1.3 | 6.0 | 3.0 | 137 | 123 | 55 | 125 | 1 |
| 4 | 33 | T/3528-12 | T491T336(1)004A(2) | 1.3 | 8.0 | 5.0 | 118 | 106 | 47 | 125 | 1 |
| 4 | 47 | C/6032-28 | T491C476(1)004A(2) | 1.9 | 6.0 | 1.6 | 262 | 236 | 105 | 125 | 1 |
| 4 | 47 | U/6032-15 | T491U476(1)004A(2) | 1.9 | 6.0 | 1.8 | 224 | 202 | 90 | 125 | 1 |
| 4 | 47 | B/3528-21 | T491B476(1)004A(2) | 1.9 | 6.0 | 2.0 | 206 | 185 | 82 | 125 | 1 |
| 4 | 47 | A/3216-18 | T491A476(1)004A(2) | 1.9 | 10.0 | 2.5 | 173 | 156 | 69 | 125 | 1 |
| 4 | 47 | T/3528-12 | T491T476(M)004A(2) | 1.9 | 12.0 | 6.0 | 108 | 97 | 43 | 125 | 1 |
| 4 | 68 | D/7343-31 | T491D686(1)004A(2) | 2.7 | 6.0 | 0.8 | 433 | 390 | 173 | 125 | 1 |
| 4 | 68 | C/6032-28 | T491C686(1)004A(2) | 2.7 | 6.0 | 1.5 | 271 | 244 | 108 | 125 | 1 |
| 4 | 68 | U/6032-15 | T491U686(1)004A(2) | 2.7 | 6.0 | 1.8 | 224 | 202 | 90 | 125 | 1 |
| 4 | 68 | B/3528-21 | T491B686(1)004A(2) | 2.7 | 6.0 | 1.8 | 217 | 195 | 87 | 125 | 1 |
| 4 | 68 | A/3216-18 | T491A686(1)004A(2) | 2.7 | 30.0 | 4.0 | 137 | 123 | 55 | 125 | 1 |
| 4 | 100 | D/7343-31 | T491D107(1)004A(2) | 4.0 | 8.0 | 0.8 | 433 | 390 | 173 | 125 | 1 |
| 4 | 100 | C/6032-28 | T491C107(1)004A(2) | 4.0 | 8.0 | 1.2 | 303 | 273 | 121 | 125 | 1 |
| 4 | 100 | U/6032-15 | T491U107(1)004A(2) | 4.0 | 10.0 | 1.8 | 224 | 202 | 90 | 125 | 1 |
| 4 | 100 | B/3528-21 | T491B107(1)004A(2) | 4.0 | 8.0 | 0.9 | 307 | 276 | 123 | 125 | 1 |
| 4 | 100 | A/3216-18 | T491A107(M)004A(2) | 4.0 | 30.0 | 4.0 | 137 | 123 | 55 | 125 | 1 |
| 4 | 100 | T/3528-12 | T491T107(M)004A(2) | 4.0 | 30.0 | 5.0 | 118 | 106 | 47 | 125 | 1 |
| 4 | 150 | D/7343-31 | T491D157(1)004A(2) | 6.0 | 8.0 | 0.8 | 433 | 390 | 173 | 125 | 1 |
| 4 | 150 | U/6032-15 | T491U157(1)004A(2) | 6.0 | 8.0 | 1.3 | 263 | 237 | 105 | 125 | 1 |
| 4 | 150 | V/7343-20 | T491V157(1)004A(2) | 6.0 | 8.0 | 0.7 | 423 | 381 | 169 | 125 | 1 |
| 4 | 150 | C/6032-28 | T491C157(1)004A(2) | 6.0 | 8.0 | 1.2 | 303 | 273 | 121 | 125 | 1 |
| 4 | 150 | B/3528-21 | T491B157(1)004A(2) | 6.0 | 12.0 | 2.0 | 206 | 185 | 82 | 125 | 1 |
| 4 | 220 | V/7343-20 | T491V227(1)004A(2) | 8.8 | 8.0 | 0.7 | 423 | 381 | 169 | 125 | 1 |
| VDC at 85°C | µF | KEMET/EIA | (See below for part options) | µA at +25°C Maximum/ 5 Minutes | % at +25°C 120 Hz Maximum | Ω at +25°C 100 kHz Maximum | mA at +25°C 100 kHz | mA at +85°C 100 kHz | mA at +125°C 100 kHz | °C | Reflow Temp ≤ 260 °C |
| Rated Voltage | Rated Cap | Case Code/ Case Size | KEMET Part Number | DC Leakage | DF | ESR | Maximum Allowable Ripple Current (rms) | | | Maximum Operating Temp | MSL |

*(1) To complete KEMET part number, insert M for ±20% or K for ±10%. Designates Capacitance Tolerance.*
*(2) To complete KEMET part number, insert T = 100% Matte Tin (Sn)-plated, G = Gold-plated, H = Standard solder coated (SnPb 5% Pb minimum), N = Non-magnetic 100% Tin (Sn), M = Non-magnetic (SnPb). Designates Termination Finish.*
*Refer to Ordering Information for additional details.*
*Higher voltage ratings and tighter tolerance product including ESR may be substituted within the same size at KEMET's option. Voltage substitution will be marked with the higher voltage rating. Substitutions can include better than series.*

## Table 1 – Ratings & Part Number Reference cont.

| Rated Voltage | Rated Cap | Case Code/ Case Size | KEMET Part Number | DC Leakage | DF | ESR | Maximum Allowable Ripple Current (rms) | | | Maximum Operating Temp | MSL |
|---|---|---|---|---|---|---|---|---|---|---|---|
| VDC at 85°C | µF | KEMET/EIA | (See below for part options) | µA at +25°C Maximum/ 5 Minutes | % at +25°C 120 Hz Maximum | Ω at +25°C 100 kHz Maximum | mA at +25°C 100 kHz | mA at +85°C 100 kHz | mA at +125°C 100 kHz | °C | Reflow Temp ≤ 260 °C |
| 4 | 220 | B/3528-21 | T491B227(1)004A(2) | 8.8 | 18.0 | 0.5 | 412 | 371 | 165 | 125 | 1 |
| 4 | 220 | C/6032-28 | T491C227(1)004A(2) | 8.8 | 15.0 | 1.2 | 303 | 273 | 121 | 125 | 1 |
| 4 | 220 | D/7343-31 | T491D227(1)004A(2) | 8.8 | 8.0 | 0.8 | 433 | 390 | 173 | 125 | 1 |
| 4 | 220 | W/7343-15 | T491W227(1)004AT | 8.8 | 8.0 | 0.8 | 474 | 427 | 190 | 125 | 1 |
| 4 | 330 | D/7343-31 | T491D337(1)004A(2) | 13.2 | 8.0 | 0.7 | 463 | 417 | 185 | 125 | 1 |
| 4 | 330 | V/7343-20 | T491V337(1)004A(2) | 13.2 | 12.0 | 0.7 | 423 | 381 | 169 | 125 | 1 |
| 4 | 330 | C/6032-28 | T491C337(1)004A(2) | 13.2 | 10.0 | 0.9 | 350 | 315 | 140 | 125 | 1 |
| 4 | 330 | X/7343-43 | T491X337(1)004A(2) | 13.2 | 8.0 | 0.8 | 454 | 409 | 182 | 125 | 1 |
| 4 | 470 | X/7343-43 | T491X477(1)004A(2) | 18.8 | 8.0 | 0.5 | 574 | 517 | 230 | 125 | 1 |
| 4 | 470 | D/7343-31 | T491D477(1)004A(2) | 18.8 | 8.0 | 0.8 | 433 | 390 | 173 | 125 | 1 |
| 4 | 680 | X/7343-43 | T491X687(1)004A(2) | 27.2 | 12.0 | 0.5 | 574 | 517 | 230 | 125 | 1 |
| 4 | 680 | D/7343-31 | T491D687(1)004A(2) | 27.2 | 12.0 | 0.5 | 548 | 493 | 219 | 125 | 1 |
| 4 | 1000 | X/7343-43 | T491X108(1)004A(2) | 40.0 | 12.0 | 0.5 | 574 | 517 | 230 | 125 | 1 |
| 4 | 1000 | E/7360-38 | T491E108(M)004A(2) | 40.0 | 15.0 | 0.2 | 1000 | 900 | 400 | 125 | 1 |
| 6.3 | 2.2 | A/3216-18 | T491A225(1)006A(2) | 0.5 | 6.0 | 8.0 | 97 | 87 | 39 | 125 | 1 |
| 6.3 | 3.3 | A/3216-18 | T491A335(1)006A(2) | 0.5 | 6.0 | 7.0 | 104 | 94 | 42 | 125 | 1 |
| 6.3 | 4.7 | A/3216-18 | T491A475(1)006A(2) | 0.5 | 6.0 | 5.5 | 117 | 105 | 47 | 125 | 1 |
| 6.3 | 4.7 | S/3216-12 | T491S475(1)006A(2) | 0.5 | 6.0 | 15.0 | 63 | 57 | 25 | 125 | 1 |
| 6.3 | 6.8 | B/3528-21 | T491B685(1)006A(2) | 0.5 | 6.0 | 3.5 | 156 | 140 | 62 | 125 | 1 |
| 6.3 | 6.8 | A/3216-18 | T491A685(1)006A(2) | 0.5 | 6.0 | 6.0 | 112 | 101 | 45 | 125 | 1 |
| 6.3 | 6.8 | S/3216-12 | T491S685(1)006A(2) | 0.5 | 6.0 | 15.0 | 63 | 57 | 25 | 125 | 1 |
| 6.3 | 10 | B/3528-21 | T491B106(1)006A(2) | 0.6 | 6.0 | 3.5 | 156 | 140 | 62 | 125 | 1 |
| 6.3 | 10 | A/3216-18 | T491A106(1)006A(2) | 0.6 | 6.0 | 4.0 | 137 | 123 | 55 | 125 | 1 |
| 6.3 | 10 | T/3528-12 | T491T106(1)006A(2) | 0.6 | 6.0 | 5.0 | 118 | 106 | 47 | 125 | 1 |
| 6.3 | 10 | S/3216-12 | T491S106(1)006A(2) | 0.6 | 10.0 | 15.0 | 63 | 57 | 25 | 125 | 1 |
| 6.3 | 15 | C/6032-28 | T491C156(1)006A(2) | 0.9 | 6.0 | 1.8 | 247 | 222 | 99 | 125 | 1 |
| 6.3 | 15 | B/3528-21 | T491B156(1)006A(2) | 0.9 | 6.0 | 3.0 | 168 | 151 | 67 | 125 | 1 |
| 6.3 | 15 | A/3216-18 | T491A156(1)006A(2) | 0.9 | 6.0 | 3.5 | 146 | 131 | 58 | 125 | 1 |
| 6.3 | 15 | T/3528-12 | T491T156(1)006A(2) | 0.9 | 6.0 | 3.5 | 141 | 127 | 56 | 125 | 1 |
| 6.3 | 15 | S/3216-12 | T491S156(1)006A(2) | 0.9 | 15.0 | 10.0 | 77 | 69 | 31 | 125 | 1 |
| 6.3 | 22 | C/6032-28 | T491C226(1)006A(2) | 1.4 | 6.0 | 1.8 | 247 | 222 | 99 | 125 | 1 |
| 6.3 | 22 | U/6032-15 | T491U226(1)006A(2) | 1.4 | 6.0 | 1.8 | 224 | 202 | 90 | 125 | 1 |
| 6.3 | 22 | B/3528-21 | T491B226(1)006A(2) | 1.4 | 6.0 | 2.0 | 206 | 185 | 82 | 125 | 1 |
| 6.3 | 22 | A/3216-18 | T491A226(1)006A(2) | 1.4 | 6.0 | 3.0 | 158 | 142 | 63 | 125 | 1 |
| 6.3 | 22 | T/3528-12 | T491T226(1)006A(2) | 1.4 | 8.0 | 5.0 | 118 | 106 | 47 | 125 | 1 |
| 6.3 | 33 | C/6032-28 | T491C336(1)006A(2) | 2.1 | 6.0 | 1.6 | 262 | 236 | 105 | 125 | 1 |
| 6.3 | 33 | U/6032-15 | T491U336(1)006A(2) | 2.1 | 6.0 | 1.8 | 224 | 202 | 90 | 125 | 1 |
| 6.3 | 33 | B/3528-21 | T491B336(1)006A(2) | 2.1 | 6.0 | 2.2 | 197 | 177 | 79 | 125 | 1 |
| 6.3 | 33 | A/3216-18 | T491A336(1)006A(2) | 2.1 | 12.0 | 2.5 | 173 | 156 | 69 | 125 | 1 |
| 6.3 | 33 | T/3528-12 | T491T336(1)006A(2) | 2.1 | 12.0 | 6.0 | 108 | 97 | 43 | 125 | 1 |
| 6.3 | 47 | D/7343-31 | T491D476(1)006A(2) | 3.0 | 6.0 | 0.8 | 433 | 390 | 173 | 125 | 1 |
| 6.3 | 47 | C/6032-28 | T491C476(1)006A(2) | 3.0 | 6.0 | 1.5 | 271 | 244 | 108 | 125 | 1 |
| 6.3 | 47 | U/6032-15 | T491U476(1)006A(2) | 3.0 | 6.0 | 1.8 | 224 | 202 | 90 | 125 | 1 |
| 6.3 | 47 | V/7343-20 | T491V476(1)006A(2) | 3.0 | 6.0 | 0.7 | 423 | 381 | 169 | 125 | 1 |
| 6.3 | 47 | B/3528-21 | T491B476(1)006A(2) | 3.0 | 6.0 | 2.0 | 206 | 185 | 82 | 125 | 1 |
| 6.3 | 47 | A/3216-18 | T491A476(1)006A(2) | 3.0 | 12.0 | 3.5 | 146 | 131 | 58 | 125 | 1 |
| VDC at 85°C | µF | KEMET/EIA | (See below for part options) | µA at +25°C Maximum/ 5 Minutes | % at +25°C 120 Hz Maximum | Ω at +25°C 100 kHz Maximum | mA at +25°C 100 kHz | mA at +85°C 100 kHz | mA at +125°C 100 kHz | °C | Reflow Temp ≤ 260 °C |
| Rated Voltage | Rated Cap | Case Code/ Case Size | KEMET Part Number | DC Leakage | DF | ESR | Maximum Allowable Ripple Current (rms) | | | Maximum Operating Temp | MSL |

*(1) To complete KEMET part number, insert M for ±20% or K for ±10%. Designates Capacitance Tolerance.*
*(2) To complete KEMET part number, insert T = 100% Matte Tin (Sn)-plated, G = Gold-plated, H = Standard solder coated (SnPb 5% Pb minimum), N = Non-magnetic 100% Tin (Sn), M = Non-magnetic (SnPb). Designates Termination Finish.*
*Refer to Ordering Information for additional details.*
*Higher voltage ratings and tighter tolerance product including ESR may be substituted within the same size at KEMET's option. Voltage substitution will be marked with the higher voltage rating. Substitutions can include better than series.*

## Table 1 – Ratings & Part Number Reference cont.

| Rated Voltage | Rated Cap | Case Code/ Case Size | KEMET Part Number | DC Leakage | DF | ESR | Maximum Allowable Ripple Current (rms) | | | Maximum Operating Temp | MSL |
|---|---|---|---|---|---|---|---|---|---|---|---|
| VDC at 85°C | µF | KEMET/EIA | (See below for part options) | µA at +25°C Maximum/ 5 Minutes | % at +25°C 120 Hz Maximum | Ω at +25°C 100 kHz Maximum | mA at +25°C 100 kHz | mA at +85°C 100 kHz | mA at +125°C 100 kHz | °C | Reflow Temp ≤ 260 °C |
| 6.3 | 47 | T/3528-12 | T491T476(1)006A(2) | 3.0 | 10.0 | 2.0 | 187 | 168 | 75 | 125 | 1 |
| 6.3 | 68 | D/7343-31 | T491D686(1)006A(2) | 4.3 | 6.0 | 0.8 | 433 | 390 | 173 | 125 | 1 |
| 6.3 | 68 | C/6032-28 | T491C686(1)006A(2) | 4.3 | 6.0 | 1.2 | 303 | 273 | 121 | 125 | 1 |
| 6.3 | 68 | U/6032-15 | T491U686(1)006A(2) | 4.3 | 10.0 | 1.8 | 224 | 202 | 90 | 125 | 1 |
| 6.3 | 68 | V/7343-20 | T491V686(1)006A(2) | 4.3 | 6.0 | 0.7 | 423 | 381 | 169 | 125 | 1 |
| 6.3 | 68 | B/3528-21 | T491B686(1)006A(2) | 4.3 | 8.0 | 0.9 | 307 | 276 | 123 | 125 | 1 |
| 6.3 | 68 | A/3216-18 | T491A686(1)006A(2) | 4.3 | 30.0 | 4.0 | 137 | 123 | 55 | 125 | 1 |
| 6.3 | 100 | D/7343-31 | T491D107(1)006A(2) | 6.3 | 8.0 | 0.8 | 433 | 390 | 173 | 125 | 1 |
| 6.3 | 100 | V/7343-20 | T491V107(1)006A(2) | 6.3 | 8.0 | 0.7 | 423 | 381 | 169 | 125 | 1 |
| 6.3 | 100 | C/6032-28 | T491C107(1)006A(2) | 6.3 | 8.0 | 0.9 | 350 | 315 | 140 | 125 | 1 |
| 6.3 | 100 | U/6032-15 | T491U107(1)006A(2) | 6.3 | 10.0 | 1.8 | 224 | 202 | 90 | 125 | 1 |
| 6.3 | 100 | B/3528-21 | T491B107(1)006A(2) | 6.3 | 12.0 | 2.0 | 206 | 185 | 82 | 125 | 1 |
| 6.3 | 100 | M/3528-15 | T491M107(1)006A(2) | 6.3 | 20.0 | 3.0 | 200 | 180 | 80 | 125 | 1 |
| 6.3 | 150 | B/3528-21 | T491B157(1)006A(2) | 9.5 | 15.0 | 3.0 | 168 | 151 | 67 | 125 | 1 |
| 6.3 | 150 | D/7343-31 | T491D157(1)006A(2) | 9.5 | 8.0 | 0.7 | 463 | 417 | 185 | 125 | 1 |
| 6.3 | 150 | C/6032-28 | T491C157(1)006A(2) | 9.5 | 8.0 | 1.2 | 303 | 273 | 121 | 125 | 1 |
| 6.3 | 150 | V/7343-20 | T491V157(1)006A(2) | 9.5 | 8.0 | 0.7 | 423 | 381 | 169 | 125 | 1 |
| 6.3 | 150 | U/6032-15 | T491U157(1)006A(2) | 9.5 | 8.0 | 0.6 | 387 | 348 | 155 | 125 | 1 |
| 6.3 | 150 | W/7343-15 | T491W157(1)006AT | 9.5 | 8.0 | 0.8 | 474 | 427 | 190 | 125 | 1 |
| 6.3 | 150 | X/7343-43 | T491X157(1)006A(2) | 9.5 | 8.0 | 0.7 | 486 | 437 | 194 | 125 | 1 |
| 6.3 | 220 | X/7343-43 | T491X227(1)006A(2) | 13.9 | 8.0 | 0.7 | 486 | 437 | 194 | 125 | 1 |
| 6.3 | 220 | D/7343-31 | T491D227(1)006A(2) | 13.9 | 8.0 | 0.7 | 463 | 417 | 185 | 125 | 1 |
| 6.3 | 220 | C/6032-28 | T491C227(1)006A(2) | 13.9 | 10.0 | 1.0 | 332 | 299 | 133 | 125 | 1 |
| 6.3 | 220 | V/7343-20 | T491V227(1)006A(2) | 13.9 | 8.0 | 0.7 | 423 | 381 | 169 | 125 | 1 |
| 6.3 | 220 | W/7343-15 | T491W227(1)006AT | 13.9 | 8.0 | 0.8 | 474 | 427 | 190 | 125 | 1 |
| 6.3 | 330 | C/6032-28 | T491C337(1)006A(2) | 20.8 | 12.0 | 1.2 | 303 | 273 | 121 | 125 | 1 |
| 6.3 | 330 | V/7343-20 | T491V337(1)006A(2) | 20.8 | 8.0 | 0.7 | 423 | 381 | 169 | 125 | 1 |
| 6.3 | 330 | X/7343-43 | T491X337(1)006A(2) | 20.8 | 8.0 | 0.4 | 642 | 578 | 257 | 125 | 1 |
| 6.3 | 330 | D/7343-31 | T491D337(1)006A(2) | 20.8 | 8.0 | 0.4 | 612 | 551 | 245 | 125 | 1 |
| 6.3 | 330 | E/7360-38 | T491E337(1)006A(2) | 20.8 | 8.0 | 0.5 | 632 | 569 | 253 | 125 | 1 |
| 6.3 | 470 | X/7343-43 | T491X477(1)006A(2) | 29.6 | 8.0 | 0.4 | 642 | 578 | 257 | 125 | 1 |
| 6.3 | 470 | D/7343-31 | T491D477(1)006A(2) | 29.6 | 12.0 | 0.4 | 612 | 551 | 245 | 125 | 1 |
| 6.3 | 470 | V/7343-20 | T491V477(1)006A(2) | 29.6 | 15.0 | 0.7 | 423 | 381 | 169 | 125 | 1 |
| 6.3 | 470 | E/7360-38 | T491E477(1)006A(2) | 29.6 | 10.0 | 0.4 | 707 | 636 | 283 | 125 | 1 |
| 6.3 | 680 | X/7343-43 | T491X687(1)006A(2) | 42.8 | 15.0 | 0.6 | 524 | 472 | 210 | 125 | 1 |
| 6.3 | 680 | E/7360-38 | T491E687(M)006A(2) | 42.8 | 12.0 | 0.5 | 632 | 569 | 253 | 125 | 1 |
| 6.3 | 1000 | X/7343-43 | T491X108(1)006A(2) | 63.0 | 15.0 | 0.6 | 524 | 472 | 210 | 125 | 1 |
| 10 | 1 | A/3216-18 | T491A105(1)010A(2) | 0.5 | 4.0 | 10.0 | 87 | 78 | 35 | 125 | 1 |
| 10 | 1.5 | A/3216-18 | T491A155(1)010A(2) | 0.5 | 6.0 | 8.0 | 97 | 87 | 39 | 125 | 1 |
| 10 | 2.2 | B/3528-21 | T491B225(1)010A(2) | 0.5 | 6.0 | 3.5 | 156 | 140 | 62 | 125 | 1 |
| 10 | 2.2 | A/3216-18 | T491A225(1)010A(2) | 0.5 | 6.0 | 7.0 | 104 | 94 | 42 | 125 | 1 |
| 10 | 3.3 | A/3216-18 | T491A335(1)010A(2) | 0.5 | 6.0 | 5.5 | 117 | 105 | 47 | 125 | 1 |
| 10 | 3.3 | S/3216-12 | T491S335(1)010A(2) | 0.5 | 6.0 | 15.0 | 63 | 57 | 25 | 125 | 1 |
| 10 | 4.7 | B/3528-21 | T491B475(1)010A(2) | 0.5 | 6.0 | 3.5 | 156 | 140 | 62 | 125 | 1 |
| 10 | 4.7 | A/3216-18 | T491A475(1)010A(2) | 0.5 | 6.0 | 4.0 | 137 | 123 | 55 | 125 | 1 |
| 10 | 4.7 | S/3216-12 | T491S475(1)010A(2) | 0.5 | 6.0 | 15.0 | 63 | 57 | 25 | 125 | 1 |
| VDC at 85°C | µF | KEMET/EIA | (See below for part options) | µA at +25°C Maximum/ 5 Minutes | % at +25°C 120 Hz Maximum | Ω at +25°C 100 kHz Maximum | mA at +25°C 100 kHz | mA at +85°C 100 kHz | mA at +125°C 100 kHz | °C | Reflow Temp ≤ 260 °C |
| Rated Voltage | Rated Cap | Case Code/ Case Size | KEMET Part Number | DC Leakage | DF | ESR | Maximum Allowable Ripple Current (rms) | | | Maximum Operating Temp | MSL |

*(1) To complete KEMET part number, insert M for ±20% or K for ±10%. Designates Capacitance Tolerance.*
*(2) To complete KEMET part number, insert T = 100% Matte Tin (Sn)-plated, G = Gold-plated, H = Standard solder coated (SnPb 5% Pb minimum), N = Non-magnetic 100% Tin (Sn), M = Non-magnetic (SnPb). Designates Termination Finish.*
*Refer to Ordering Information for additional details.*
*Higher voltage ratings and tighter tolerance product including ESR may be substituted within the same size at KEMET's option. Voltage substitution will be marked with the higher voltage rating. Substitutions can include better than series.*

## Table 1 – Ratings & Part Number Reference cont.

| Rated Voltage | Rated Cap | Case Code/ Case Size | KEMET Part Number | DC Leakage | DF | ESR | Maximum Allowable Ripple Current (rms) | | | Maximum Operating Temp | MSL |
|---|---|---|---|---|---|---|---|---|---|---|---|
| VDC at 85°C | µF | KEMET/EIA | (See below for part options) | µA at +25°C Maximum/ 5 Minutes | % at +25°C 120 Hz Maximum | Ω at +25°C 100 kHz Maximum | mA at +25°C 100 kHz | mA at +85°C 100 kHz | mA at +125°C 100 kHz | °C | Reflow Temp ≤ 260 °C |
| 10 | 6.8 | B/3528-21 | T491B685(1)010A(2) | 0.7 | 6.0 | 3.5 | 156 | 140 | 62 | 125 | 1 |
| 10 | 6.8 | A/3216-18 | T491A685(1)010A(2) | 0.7 | 6.0 | 4.0 | 137 | 123 | 55 | 125 | 1 |
| 10 | 6.8 | T/3528-12 | T491T685(1)010A(2) | 0.7 | 6.0 | 5.0 | 118 | 106 | 47 | 125 | 1 |
| 10 | 6.8 | S/3216-12 | T491S685(1)010A(2) | 0.7 | 10.0 | 15.0 | 63 | 57 | 25 | 125 | 1 |
| 10 | 10 | C/6032-28 | T491C106(1)010A(2) | 1.0 | 6.0 | 1.8 | 247 | 222 | 99 | 125 | 1 |
| 10 | 10 | B/3528-21 | T491B106(1)010A(2) | 1.0 | 6.0 | 3.0 | 168 | 151 | 67 | 125 | 1 |
| 10 | 10 | A/3216-18 | T491A106(1)010A(2) | 1.0 | 6.0 | 3.8 | 137 | 123 | 55 | 125 | 1 |
| 10 | 10 | T/3528-12 | T491T106(1)010A(2) | 1.0 | 6.0 | 3.0 | 153 | 138 | 61 | 125 | 1 |
| 10 | 10 | S/3216-12 | T491S106(1)010A(2) | 1.0 | 10.0 | 15.0 | 63 | 57 | 25 | 125 | 1 |
| 10 | 15 | C/6032-28 | T491C156(1)010A(2) | 1.5 | 6.0 | 1.8 | 247 | 222 | 99 | 125 | 1 |
| 10 | 15 | U/6032-15 | T491U156(1)010A(2) | 1.5 | 6.0 | 1.8 | 224 | 202 | 90 | 125 | 1 |
| 10 | 15 | B/3528-21 | T491B156(1)010A(2) | 1.5 | 6.0 | 2.0 | 206 | 185 | 82 | 125 | 1 |
| 10 | 15 | A/3216-18 | T491A156(1)010A(2) | 1.5 | 8.0 | 6.0 | 112 | 101 | 45 | 125 | 1 |
| 10 | 15 | T/3528-12 | T491T156(1)010A(2) | 1.5 | 6.0 | 2.8 | 158 | 142 | 63 | 125 | 1 |
| 10 | 22 | D/7343-31 | T491D226(1)010A(2) | 2.2 | 6.0 | 0.8 | 433 | 390 | 173 | 125 | 1 |
| 10 | 22 | C/6032-28 | T491C226(1)010A(2) | 2.2 | 6.0 | 1.6 | 262 | 236 | 105 | 125 | 1 |
| 10 | 22 | U/6032-15 | T491U226(1)010A(2) | 2.2 | 6.0 | 1.8 | 224 | 202 | 90 | 125 | 1 |
| 10 | 22 | B/3528-21 | T491B226(1)010A(2) | 2.2 | 6.0 | 2.0 | 206 | 185 | 82 | 125 | 1 |
| 10 | 22 | A/3216-18 | T491A226(1)010A(2) | 2.2 | 8.0 | 3.2 | 112 | 101 | 45 | 125 | 1 |
| 10 | 22 | T/3528-12 | T491T226(1)010A(2) | 2.2 | 12.0 | 8.0 | 94 | 85 | 38 | 125 | 1 |
| 10 | 33 | D/7343-31 | T491D336(1)010A(2) | 3.3 | 6.0 | 0.8 | 433 | 390 | 173 | 125 | 1 |
| 10 | 33 | V/7343-20 | T491V336(1)010A(2) | 3.3 | 6.0 | 0.7 | 423 | 381 | 169 | 125 | 1 |
| 10 | 33 | C/6032-28 | T491C336(1)010A(2) | 3.3 | 6.0 | 1.5 | 271 | 244 | 108 | 125 | 1 |
| 10 | 33 | U/6032-15 | T491U336(1)010A(2) | 3.3 | 6.0 | 1.8 | 224 | 202 | 90 | 125 | 1 |
| 10 | 33 | B/3528-21 | T491B336(1)010A(2) | 3.3 | 6.0 | 1.8 | 217 | 195 | 87 | 125 | 1 |
| 10 | 33 | T/3528-12 | T491T336(1)010A(2) | 3.3 | 24.0 | 5.0 | 118 | 106 | 47 | 125 | 1 |
| 10 | 33 | A/3216-18 | T491A336(1)010A(2) | 3.3 | 15.0 | 6.0 | 112 | 101 | 45 | 125 | 1 |
| 10 | 47 | D/7343-31 | T491D476(1)010A(2) | 4.7 | 6.0 | 0.8 | 433 | 390 | 173 | 125 | 1 |
| 10 | 47 | V/7343-20 | T491V476(1)010A(2) | 4.7 | 6.0 | 0.7 | 423 | 381 | 169 | 125 | 1 |
| 10 | 47 | C/6032-28 | T491C476(1)010A(2) | 4.7 | 6.0 | 1.2 | 303 | 273 | 121 | 125 | 1 |
| 10 | 47 | U/6032-15 | T491U476(1)010A(2) | 4.7 | 6.0 | 1.4 | 254 | 229 | 102 | 125 | 1 |
| 10 | 47 | B/3528-21 | T491B476(1)010A(2) | 4.7 | 8.0 | 1.0 | 292 | 263 | 117 | 125 | 1 |
| 10 | 68 | D/7343-31 | T491D686(1)010A(2) | 6.8 | 6.0 | 0.8 | 433 | 390 | 173 | 125 | 1 |
| 10 | 68 | V/7343-20 | T491V686(1)010A(2) | 6.8 | 6.0 | 0.7 | 423 | 381 | 169 | 125 | 1 |
| 10 | 68 | C/6032-28 | T491C686(1)010A(2) | 6.8 | 6.0 | 1.0 | 332 | 299 | 133 | 125 | 1 |
| 10 | 68 | W/7343-15 | T491W686(1)010AT | 6.8 | 6.0 | 1.2 | 387 | 348 | 155 | 125 | 1 |
| 10 | 68 | U/6032-15 | T491U686(1)010A(2) | 6.8 | 10.0 | 1.8 | 224 | 202 | 90 | 125 | 1 |
| 10 | 68 | B/3528-21 | T491B686(1)010A(2) | 6.8 | 8.0 | 1.0 | 292 | 263 | 117 | 125 | 1 |
| 10 | 100 | B/3528-21 | T491B107(1)010A(2) | 10.0 | 15.0 | 1.2 | 266 | 239 | 106 | 125 | 1 |
| 10 | 100 | D/7343-31 | T491D107(1)010A(2) | 10.0 | 8.0 | 0.7 | 463 | 417 | 185 | 125 | 1 |
| 10 | 100 | U/6032-15 | T491U107(1)010A(2) | 10.0 | 8.0 | 0.7 | 359 | 323 | 144 | 125 | 1 |
| 10 | 100 | W/7343-15 | T491W107(1)010AT | 10.0 | 8.0 | 0.8 | 474 | 427 | 190 | 125 | 1 |
| 10 | 100 | C/6032-28 | T491C107(1)010A(2) | 10.0 | 8.0 | 1.0 | 332 | 299 | 133 | 125 | 1 |
| 10 | 100 | V/7343-20 | T491V107(1)010A(2) | 10.0 | 8.0 | 0.7 | 423 | 381 | 169 | 125 | 1 |
| 10 | 150 | X/7343-43 | T491X157(1)010A(2) | 15.0 | 8.0 | 0.7 | 486 | 437 | 194 | 125 | 1 |
| 10 | 150 | D/7343-31 | T491D157(1)010A(2) | 15.0 | 8.0 | 0.7 | 463 | 417 | 185 | 125 | 1 |
| VDC at 85°C | µF | KEMET/EIA | (See below for part options) | µA at +25°C Maximum/ 5 Minutes | % at +25°C 120 Hz Maximum | Ω at +25°C 100 kHz Maximum | mA at +25°C 100 kHz | mA at +85°C 100 kHz | mA at +125°C 100 kHz | °C | Reflow Temp ≤ 260 °C |
| Rated Voltage | Rated Cap | Case Code/ Case Size | KEMET Part Number | DC Leakage | DF | ESR | Maximum Allowable Ripple Current (rms) | | | Maximum Operating Temp | MSL |

*(1) To complete KEMET part number, insert M for ±20% or K for ±10%. Designates Capacitance Tolerance.*
*(2) To complete KEMET part number, insert T = 100% Matte Tin (Sn)-plated, G = Gold-plated, H = Standard solder coated (SnPb 5% Pb minimum), N = Non-magnetic 100% Tin (Sn), M = Non-magnetic (SnPb). Designates Termination Finish.*
*Refer to Ordering Information for additional details.*
*Higher voltage ratings and tighter tolerance product including ESR may be substituted within the same size at KEMET's option. Voltage substitution will be marked with the higher voltage rating. Substitutions can include better than series.*

## Table 1 – Ratings & Part Number Reference cont.

| Rated Voltage | Rated Cap | Case Code/ Case Size | KEMET Part Number | DC Leakage | DF | ESR | Maximum Allowable Ripple Current (rms) | | | Maximum Operating Temp | MSL |
|---|---|---|---|---|---|---|---|---|---|---|---|
| VDC at 85°C | µF | KEMET/EIA | (See below for part options) | µA at +25°C Maximum/ 5 Minutes | % at +25°C 120 Hz Maximum | Ω at +25°C 100 kHz Maximum | mA at +25°C 100 kHz | mA at +85°C 100 kHz | mA at +125°C 100 kHz | °C | Reflow Temp ≤ 260 °C |
| 10 | 150 | C/6032-28 | T491C157(1)010A(2) | 15.0 | 10.0 | 0.9 | 350 | 315 | 140 | 125 | 1 |
| 10 | 150 | V/7343-20 | T491V157(1)010A(2) | 15.0 | 8.0 | 0.7 | 423 | 381 | 169 | 125 | 1 |
| 10 | 220 | C/6032-28 | T491C227(1)010A(2) | 22.0 | 10.0 | 0.9 | 350 | 315 | 140 | 125 | 1 |
| 10 | 220 | X/7343-43 | T491X227(1)010A(2) | 22.0 | 8.0 | 0.5 | 574 | 517 | 230 | 125 | 1 |
| 10 | 220 | D/7343-31 | T491D227(1)010A(2) | 22.0 | 8.0 | 0.5 | 548 | 493 | 219 | 125 | 1 |
| 10 | 220 | V/7343-20 | T491V227(1)010A(2) | 22.0 | 8.0 | 0.7 | 423 | 381 | 169 | 125 | 1 |
| 10 | 330 | D/7343-31 | T491D337(1)010A(2) | 33.0 | 10.0 | 0.5 | 548 | 493 | 219 | 125 | 1 |
| 10 | 330 | V/7343-20 | T491V337(1)010A(2) | 33.0 | 12.0 | 0.7 | 423 | 381 | 169 | 125 | 1 |
| 10 | 330 | X/7343-43 | T491X337(1)010A(2) | 33.0 | 10.0 | 0.5 | 574 | 517 | 230 | 125 | 1 |
| 10 | 330 | E/7360-38 | T491E337(1)010A(2) | 33.0 | 10.0 | 0.5 | 632 | 569 | 253 | 125 | 1 |
| 10 | 470 | X/7343-43 | T491X477(1)010A(2) | 47 | 10 | 0.2 | 908 | 817.2 | 363.2 | 125 | 1 |
| 10 | 470 | E/7360-38 | T491E477(1)010A(2) | 47.0 | 12.0 | 0.5 | 632 | 569 | 253 | 125 | 1 |
| 16 | 1 | A/3216-18 | T491A105(1)016A(2) | 0.5 | 4.0 | 10.0 | 87 | 78 | 35 | 125 | 1 |
| 16 | 1.5 | A/3216-18 | T491A155(1)016A(2) | 0.5 | 6.0 | 8.0 | 97 | 87 | 39 | 125 | 1 |
| 16 | 2.2 | A/3216-18 | T491A225(1)016A(2) | 0.5 | 6.0 | 6.0 | 112 | 101 | 45 | 125 | 1 |
| 16 | 2.2 | S/3216-12 | T491S225(1)016A(2) | 0.5 | 6.0 | 15.0 | 63 | 57 | 25 | 125 | 1 |
| 16 | 2.2 | B/3528-21 | T491B225(1)016A(2) | 0.5 | 6.0 | 3.5 | 156 | 140 | 62 | 125 | 1 |
| 16 | 3.3 | B/3528-21 | T491B335(1)016A(2) | 0.5 | 6.0 | 3.5 | 156 | 140 | 62 | 125 | 1 |
| 16 | 3.3 | A/3216-18 | T491A335(1)016A(2) | 0.5 | 6.0 | 5.0 | 122 | 110 | 49 | 125 | 1 |
| 16 | 4.7 | C/6032-28 | T491C475(1)016A(2) | 0.8 | 6.0 | 2.4 | 214 | 193 | 86 | 125 | 1 |
| 16 | 4.7 | B/3528-21 | T491B475(1)016A(2) | 0.8 | 6.0 | 3.5 | 156 | 140 | 62 | 125 | 1 |
| 16 | 4.7 | A/3216-18 | T491A475(1)016A(2) | 0.8 | 6.0 | 4.0 | 137 | 123 | 55 | 125 | 1 |
| 16 | 4.7 | T/3528-12 | T491T475(1)016A(2) | 0.8 | 6.0 | 5.0 | 118 | 106 | 47 | 125 | 1 |
| 16 | 6.8 | C/6032-28 | T491C685(1)016A(2) | 1.1 | 6.0 | 1.9 | 241 | 217 | 96 | 125 | 1 |
| 16 | 6.8 | B/3528-21 | T491B685(1)016A(2) | 1.1 | 6.0 | 2.5 | 184 | 166 | 74 | 125 | 1 |
| 16 | 6.8 | A/3216-18 | T491A685(1)016A(2) | 1.1 | 6.0 | 3.5 | 146 | 131 | 58 | 125 | 1 |
| 16 | 10 | C/6032-28 | T491C106(1)016A(2) | 1.6 | 6.0 | 1.8 | 247 | 222 | 99 | 125 | 1 |
| 16 | 10 | U/6032-15 | T491U106(1)016A(2) | 1.6 | 6.0 | 1.8 | 224 | 202 | 90 | 125 | 1 |
| 16 | 10 | B/3528-21 | T491B106(1)016A(2) | 1.6 | 6.0 | 2.0 | 206 | 185 | 82 | 125 | 1 |
| 16 | 10 | A/3216-18 | T491A106(1)016A(2) | 1.6 | 6.0 | 3.0 | 158 | 142 | 63 | 125 | 1 |
| 16 | 10 | T/3528-12 | T491T106(1)016A(2) | 1.6 | 8.0 | 8.0 | 94 | 85 | 38 | 125 | 1 |
| 16 | 15 | D/7343-31 | T491D156(1)016A(2) | 2.4 | 6.0 | 1.0 | 387 | 348 | 155 | 125 | 1 |
| 16 | 15 | C/6032-28 | T491C156(1)016A(2) | 2.4 | 6.0 | 1.6 | 262 | 236 | 105 | 125 | 1 |
| 16 | 15 | U/6032-15 | T491U156(1)016A(2) | 2.4 | 6.0 | 1.8 | 224 | 202 | 90 | 125 | 1 |
| 16 | 15 | B/3528-21 | T491B156(1)016A(2) | 2.4 | 6.0 | 2.0 | 206 | 185 | 82 | 125 | 1 |
| 16 | 15 | A/3216-18 | T491A156(1)016A(2) | 2.4 | 8.0 | 3.5 | 146 | 131 | 58 | 125 | 1 |
| 16 | 22 | D/7343-31 | T491D226(1)016A(2) | 3.5 | 6.0 | 0.8 | 433 | 390 | 173 | 125 | 1 |
| 16 | 22 | C/6032-28 | T491C226(1)016A(2) | 3.5 | 6.0 | 1.5 | 271 | 244 | 108 | 125 | 1 |
| 16 | 22 | U/6032-15 | T491U226(1)016A(2) | 3.5 | 10.0 | 3.0 | 173 | 156 | 69 | 125 | 1 |
| 16 | 22 | B/3528-21 | T491B226(1)016A(2) | 3.5 | 6.0 | 2.2 | 197 | 177 | 79 | 125 | 1 |
| 16 | 33 | D/7343-31 | T491D336(1)016A(2) | 5.3 | 6.0 | 0.8 | 433 | 390 | 173 | 125 | 1 |
| 16 | 33 | C/6032-28 | T491C336(1)016A(2) | 5.3 | 6.0 | 1.2 | 303 | 273 | 121 | 125 | 1 |
| 16 | 33 | U/6032-15 | T491U336(1)016A(2) | 5.3 | 6.0 | 1.0 | 300 | 270 | 120 | 125 | 1 |
| 16 | 33 | B/3528-21 | T491B336(1)016A(2) | 5.3 | 8.0 | 2.0 | 206 | 185 | 82 | 125 | 1 |
| 16 | 47 | D/7343-31 | T491D476(1)016A(2) | 7.5 | 6.0 | 0.8 | 433 | 390 | 173 | 125 | 1 |
| 16 | 47 | V/7343-20 | T491V476(1)016A(2) | 7.5 | 6.0 | 0.7 | 423 | 381 | 169 | 125 | 1 |
| VDC at 85°C | µF | KEMET/EIA | (See below for part options) | µA at +25°C Maximum/ 5 Minutes | % at +25°C 120 Hz Maximum | Ω at +25°C 100 kHz Maximum | mA at +25°C 100 kHz | mA at +85°C 100 kHz | mA at +125°C 100 kHz | °C | Reflow Temp ≤ 260 °C |
| Rated Voltage | Rated Cap | Case Code/ Case Size | KEMET Part Number | DC Leakage | DF | ESR | Maximum Allowable Ripple Current (rms) | | | Maximum Operating Temp | MSL |

*(1) To complete KEMET part number, insert M for ±20% or K for ±10%. Designates Capacitance Tolerance.*
*(2) To complete KEMET part number, insert T = 100% Matte Tin (Sn)-plated, G = Gold-plated, H = Standard solder coated (SnPb 5% Pb minimum), N = Non-magnetic 100% Tin (Sn), M = Non-magnetic (SnPb). Designates Termination Finish.*
*Refer to Ordering Information for additional details.*
*Higher voltage ratings and tighter tolerance product including ESR may be substituted within the same size at KEMET's option. Voltage substitution will be marked with the higher voltage rating. Substitutions can include better than series.*

## Table 1 – Ratings & Part Number Reference cont.

| Rated Voltage | Rated Cap | Case Code/ Case Size | KEMET Part Number | DC Leakage | DF | ESR | Maximum Allowable Ripple Current (rms) | | | Maximum Operating Temp | MSL |
|---|---|---|---|---|---|---|---|---|---|---|---|
| VDC at 85°C | µF | KEMET/EIA | (See below for part options) | µA at +25°C Maximum/ 5 Minutes | % at +25°C 120 Hz Maximum | Ω at +25°C 100 kHz Maximum | mA at +25°C 100 kHz | mA at +85°C 100 kHz | mA at +125°C 100 kHz | °C | Reflow Temp ≤ 260 °C |
| 16 | 47 | C/6032-28 | T491C476(1)016A(2) | 7.5 | 6.0 | 1.0 | 332 | 299 | 133 | 125 | 1 |
| 16 | 68 | V/7343-20 | T491V686(1)016A(2) | 10.9 | 6.0 | 0.7 | 423 | 381 | 169 | 125 | 1 |
| 16 | 68 | C/6032-28 | T491C686(1)016A(2) | 10.9 | 6.0 | 1.0 | 332 | 299 | 133 | 125 | 1 |
| 16 | 68 | W/7343-15 | T491W686(1)016AT | 10.9 | 6.0 | 0.8 | 474 | 427 | 190 | 125 | 1 |
| 16 | 68 | D/7343-31 | T491D686(1)016A(2) | 10.9 | 6.0 | 0.7 | 463 | 417 | 185 | 125 | 1 |
| 16 | 100 | X/7343-43 | T491X107(1)016A(2) | 16.0 | 8.0 | 0.7 | 486 | 437 | 194 | 125 | 1 |
| 16 | 100 | C/6032-28 | T491C107(1)016A(2) | 16.0 | 10.0 | 1.0 | 332 | 299 | 133 | 125 | 1 |
| 16 | 100 | V/7343-20 | T491V107(1)016A(2) | 16.0 | 8.0 | 0.7 | 423 | 381 | 169 | 125 | 1 |
| 16 | 100 | D/7343-31 | T491D107(1)016A(2) | 16.0 | 8.0 | 0.7 | 463 | 417 | 185 | 125 | 1 |
| 16 | 150 | X/7343-43 | T491X157(1)016A(2) | 24.0 | 8.0 | 0.5 | 574 | 517 | 230 | 125 | 1 |
| 16 | 150 | D/7343-31 | T491D157(1)016A(2) | 24.0 | 10.0 | 0.7 | 463 | 417 | 185 | 125 | 1 |
| 16 | 220 | D/7343-31 | T491D227(1)016A(2) | 35.2 | 15.0 | 0.9 | 408 | 367 | 163 | 125 | 1 |
| 16 | 220 | X/7343-43 | T491X227(1)016A(2) | 35.2 | 10.0 | 0.5 | 574 | 517 | 230 | 125 | 1 |
| 16 | 220 | E/7360-38 | T491E227(1)016A(2) | 35.2 | 7.2 | 0.9 | 471 | 424 | 188 | 125 | 1 |
| 20 | 0.68 | A/3216-18 | T491A684(1)020A(2) | 0.5 | 4.0 | 12.0 | 79 | 71 | 32 | 125 | 1 |
| 20 | 0.47 | A/3216-18 | T491A474(1)020A(2) | 0.5 | 4.0 | 14.0 | 73 | 66 | 29 | 125 | 1 |
| 20 | 1 | A/3216-18 | T491A105(1)020A(2) | 0.5 | 4.0 | 9.0 | 91 | 82 | 36 | 125 | 1 |
| 20 | 1 | S/3216-12 | T491S105(1)020A(2) | 0.5 | 6.0 | 18.0 | 58 | 52 | 23 | 125 | 1 |
| 20 | 1.5 | A/3216-18 | T491A155(1)020A(2) | 0.5 | 6.0 | 6.5 | 107 | 96 | 43 | 125 | 1 |
| 20 | 1.5 | S/3216-12 | T491S155(1)020A(2) | 0.5 | 6.0 | 15.0 | 63 | 57 | 25 | 125 | 1 |
| 20 | 2.2 | B/3528-21 | T491B225(1)020A(2) | 0.5 | 6.0 | 3.5 | 156 | 140 | 62 | 125 | 1 |
| 20 | 2.2 | A/3216-18 | T491A225(1)020A(2) | 0.5 | 6.0 | 6.0 | 112 | 101 | 45 | 125 | 1 |
| 20 | 3.3 | B/3528-21 | T491B335(1)020A(2) | 0.7 | 6.0 | 3.0 | 168 | 151 | 67 | 125 | 1 |
| 20 | 3.3 | A/3216-18 | T491A335(1)020A(2) | 0.7 | 6.0 | 4.0 | 137 | 123 | 55 | 125 | 1 |
| 20 | 3.3 | T/3528-12 | T491T335(1)020A(2) | 0.7 | 6.0 | 5.0 | 118 | 106 | 47 | 125 | 1 |
| 20 | 4.7 | C/6032-28 | T491C475(1)020A(2) | 0.9 | 6.0 | 2.4 | 214 | 193 | 86 | 125 | 1 |
| 20 | 4.7 | B/3528-21 | T491B475(1)020A(2) | 0.9 | 6.0 | 3.0 | 168 | 151 | 67 | 125 | 1 |
| 20 | 4.7 | A/3216-18 | T491A475(1)020A(2) | 0.9 | 6.0 | 4.0 | 137 | 123 | 55 | 125 | 1 |
| 20 | 6.8 | C/6032-28 | T491C685(1)020A(2) | 1.4 | 6.0 | 1.9 | 241 | 217 | 96 | 125 | 1 |
| 20 | 6.8 | U/6032-15 | T491U685(1)020A(2) | 1.4 | 6.0 | 1.9 | 218 | 196 | 87 | 125 | 1 |
| 20 | 6.8 | B/3528-21 | T491B685(1)020A(2) | 1.4 | 6.0 | 2.0 | 206 | 185 | 82 | 125 | 1 |
| 20 | 6.8 | A/3216-18 | T491A685(1)020A(2) | 1.4 | 8.0 | 6.0 | 112 | 101 | 45 | 125 | 1 |
| 20 | 10 | D/7343-31 | T491D106(1)020A(2) | 2.0 | 6.0 | 1.0 | 387 | 349 | 155 | 125 | 1 |
| 20 | 10 | C/6032-28 | T491C106(1)020A(2) | 2.0 | 6.0 | 1.6 | 262 | 236 | 105 | 125 | 1 |
| 20 | 10 | U/6032-15 | T491U106(1)020A(2) | 2.0 | 6.0 | 1.8 | 224 | 202 | 90 | 125 | 1 |
| 20 | 10 | B/3528-21 | T491B106(1)020A(2) | 2.0 | 6.0 | 2.0 | 206 | 185 | 82 | 125 | 1 |
| 20 | 10 | A/3216-18 | T491A106(1)020A(2) | 2.0 | 10.0 | 5.0 | 122 | 110 | 49 | 125 | 1 |
| 20 | 15 | D/7343-31 | T491D156(1)020A(2) | 3.0 | 6.0 | 1.0 | 387 | 348 | 155 | 125 | 1 |
| 20 | 15 | B/3528-21 | T491B156(1)020A(2) | 3.0 | 6.0 | 2.0 | 206 | 185 | 82 | 125 | 1 |
| 20 | 15 | C/6032-28 | T491C156(1)020A(2) | 3.0 | 6.0 | 1.7 | 254 | 229 | 102 | 125 | 1 |
| 20 | 22 | D/7343-31 | T491D226(1)020A(2) | 4.4 | 6.0 | 0.8 | 433 | 390 | 173 | 125 | 1 |
| 20 | 22 | V/7343-20 | T491V226(1)020A(2) | 4.4 | 6.0 | 0.7 | 423 | 381 | 169 | 125 | 1 |
| 20 | 22 | C/6032-28 | T491C226(1)020A(2) | 4.4 | 6.0 | 1.2 | 303 | 273 | 121 | 125 | 1 |
| 20 | 22 | B/3528-21 | T491B226(1)020A(2) | 4.4 | 8.0 | 4.0 | 146 | 131 | 58 | 125 | 1 |
| 20 | 33 | D/7343-31 | T491D336(1)020A(2) | 6.6 | 6.0 | 0.8 | 433 | 390 | 173 | 125 | 1 |
| 20 | 33 | C/6032-28 | T491C336(1)020A(2) | 6.6 | 6.0 | 1.2 | 303 | 273 | 121 | 125 | 1 |
| VDC at 85°C | µF | KEMET/EIA | (See below for part options) | µA at +25°C Maximum/ 5 Minutes | % at +25°C 120 Hz Maximum | Ω at +25°C 100 kHz Maximum | mA at +25°C 100 kHz | mA at +85°C 100 kHz | mA at +125°C 100 kHz | °C | Reflow Temp ≤ 260 °C |
| Rated Voltage | Rated Cap | Case Code/ Case Size | KEMET Part Number | DC Leakage | DF | ESR | Maximum Allowable Ripple Current (rms) | | | Maximum Operating Temp | MSL |

*(1) To complete KEMET part number, insert M for ±20% or K for ±10%. Designates Capacitance Tolerance.*
*(2) To complete KEMET part number, insert T = 100% Matte Tin (Sn)-plated, G = Gold-plated, H = Standard solder coated (SnPb 5% Pb minimum), N = Non-magnetic 100% Tin (Sn), M = Non-magnetic (SnPb). Designates Termination Finish.*
*Refer to Ordering Information for additional details.*
*Higher voltage ratings and tighter tolerance product including ESR may be substituted within the same size at KEMET's option. Voltage substitution will be marked with the higher voltage rating. Substitutions can include better than series.*

## Table 1 – Ratings & Part Number Reference cont.

| Rated Voltage | Rated Cap | Case Code/ Case Size | KEMET Part Number | DC Leakage | DF | ESR | Maximum Allowable Ripple Current (rms) | | | Maximum Operating Temp | MSL |
|---|---|---|---|---|---|---|---|---|---|---|---|
| VDC at 85°C | µF | KEMET/EIA | (See below for part options) | µA at +25°C Maximum/ 5 Minutes | % at +25°C 120 Hz Maximum | Ω at +25°C 100 kHz Maximum | mA at +25°C 100 kHz | mA at +85°C 100 kHz | mA at +125°C 100 kHz | °C | Reflow Temp ≤ 260 °C |
| 20 | 33 | V/7343-20 | T491V336(1)020A(2) | 6.6 | 8.0 | 0.7 | 423 | 381 | 169 | 125 | 1 |
| 20 | 33 | B/3528-21 | T491B336(M)020A(2) | 6.6 | 10.0 | 4.0 | 146 | 131 | 58 | 125 | 1 |
| 20 | 47 | C/6032-28 | T491C476(1)020A(2) | 9.4 | 6.0 | 0.9 | 350 | 315 | 140 | 125 | 1 |
| 20 | 47 | X/7343-43 | T491X476(1)020A(2) | 9.4 | 6.0 | 0.8 | 454 | 409 | 182 | 125 | 1 |
| 20 | 47 | D/7343-31 | T491D476(1)020A(2) | 9.4 | 6.0 | 0.7 | 463 | 417 | 185 | 125 | 1 |
| 20 | 68 | X/7343-43 | T491X686(1)020A(2) | 13.6 | 6.0 | 0.7 | 486 | 437 | 194 | 125 | 1 |
| 20 | 68 | D/7343-31 | T491D686(1)020A(2) | 13.6 | 6.0 | 0.7 | 463 | 417 | 185 | 125 | 1 |
| 20 | 68 | C/6032-28 | T491C686(1)020A(2) | 13.6 | 8.0 | 0.5 | 469 | 422 | 188 | 125 | 1 |
| 20 | 100 | X/7343-43 | T491X107(1)020A(2) | 20.0 | 8.0 | 0.5 | 574 | 517 | 230 | 125 | 1 |
| 20 | 100 | D/7343-31 | T491D107(1)020A(2) | 20.0 | 8.0 | 0.9 | 408 | 367 | 163 | 125 | 1 |
| 20 | 100 | E/7360-38 | T491E107(1)020A(2) | 20.0 | 8.0 | 0.5 | 632 | 569 | 253 | 125 | 1 |
| 20 | 150 | X/7343-43 | T491X157(1)020A(2) | 30.0 | 10.0 | 0.4 | 642 | 578 | 257 | 125 | 1 |
| 25 | 0.33 | A/3216-18 | T491A334(1)025A(2) | 0.5 | 4.0 | 15.0 | 71 | 64 | 28 | 125 | 1 |
| 25 | 0.47 | A/3216-18 | T491A474(1)025A(2) | 0.5 | 4.0 | 13.0 | 76 | 68 | 30 | 125 | 1 |
| 25 | 0.68 | A/3216-18 | T491A684(1)025A(2) | 0.5 | 4.0 | 10.0 | 87 | 78 | 35 | 125 | 1 |
| 25 | 1 | B/3528-21 | T491B105(1)025A(2) | 0.5 | 4.0 | 5.0 | 130 | 117 | 52 | 125 | 1 |
| 25 | 1 | A/3216-18 | T491A105(1)025A(2) | 0.5 | 4.0 | 8.0 | 97 | 87 | 39 | 125 | 1 |
| 25 | 1 | S/3216-12 | T491S105(1)025A(2) | 0.5 | 6.0 | 18.0 | 58 | 52 | 23 | 125 | 1 |
| 25 | 1.5 | B/3528-21 | T491B155(1)025A(2) | 0.5 | 6.0 | 5.0 | 130 | 117 | 52 | 125 | 1 |
| 25 | 1.5 | A/3216-18 | T491A155(1)025A(2) | 0.5 | 6.0 | 7.0 | 104 | 94 | 42 | 125 | 1 |
| 25 | 2.2 | C/6032-28 | T491C225(1)025A(2) | 0.6 | 6.0 | 3.5 | 177 | 159 | 71 | 125 | 1 |
| 25 | 2.2 | A/3216-18 | T491A225(1)025A(2) | 0.6 | 6.0 | 7.0 | 104 | 94 | 42 | 125 | 1 |
| 25 | 2.2 | B/3528-21 | T491B225(1)025A(2) | 0.6 | 6.0 | 4.5 | 137 | 123 | 55 | 125 | 1 |
| 25 | 3.3 | C/6032-28 | T491C335(1)025A(2) | 0.8 | 6.0 | 2.5 | 210 | 189 | 84 | 125 | 1 |
| 25 | 3.3 | A/3216-18 | T491A335(1)025A(2) | 0.8 | 6.0 | 7.0 | 104 | 94 | 42 | 125 | 1 |
| 25 | 3.3 | B/3528-21 | T491B335(1)025A(2) | 0.8 | 6.0 | 3.5 | 156 | 140 | 62 | 125 | 1 |
| 25 | 4.7 | C/6032-28 | T491C475(1)025A(2) | 1.2 | 6.0 | 2.3 | 214 | 193 | 86 | 125 | 1 |
| 25 | 4.7 | B/3528-21 | T491B475(1)025A(2) | 1.2 | 6.0 | 1.5 | 238 | 214 | 95 | 125 | 1 |
| 25 | 4.7 | A/3216-18 | T491A475(1)025A(2) | 1.2 | 8.0 | 6.0 | 112 | 101 | 45 | 125 | 1 |
| 25 | 6.8 | D/7343-31 | T491D685(1)025A(2) | 1.7 | 6.0 | 1.8 | 289 | 260 | 116 | 125 | 1 |
| 25 | 6.8 | C/6032-28 | T491C685(1)025A(2) | 1.7 | 6.0 | 1.9 | 241 | 217 | 96 | 125 | 1 |
| 25 | 6.8 | B/3528-21 | T491B685(1)025A(2) | 1.7 | 6.0 | 2.8 | 174 | 157 | 70 | 125 | 1 |
| 25 | 10 | D/7343-31 | T491D106(1)025A(2) | 2.5 | 6.0 | 1.0 | 387 | 348 | 155 | 125 | 1 |
| 25 | 10 | C/6032-28 | T491C106(1)025A(2) | 2.5 | 6.0 | 1.5 | 271 | 244 | 108 | 125 | 1 |
| 25 | 10 | B/3528-21 | T491B106(1)025A(2) | 2.5 | 6.0 | 2.0 | 206 | 185 | 82 | 125 | 1 |
| 25 | 15 | D/7343-31 | T491D156(1)025A(2) | 3.8 | 6.0 | 1.0 | 387 | 348 | 155 | 125 | 1 |
| 25 | 15 | V/7343-20 | T491V156(1)025A(2) | 3.8 | 6.0 | 1.0 | 354 | 319 | 142 | 125 | 1 |
| 25 | 15 | C/6032-28 | T491C156(1)025A(2) | 3.8 | 6.0 | 1.5 | 271 | 244 | 108 | 125 | 1 |
| 25 | 15 | B/3528-21 | T491B156(1)025A(2) | 3.8 | 8.0 | 4.0 | 146 | 131 | 58 | 125 | 1 |
| 25 | 22 | D/7343-31 | T491D226(1)025A(2) | 5.5 | 6.0 | 0.8 | 433 | 390 | 173 | 125 | 1 |
| 25 | 22 | C/6032-28 | T491C226(1)025A(2) | 5.5 | 6.0 | 1.0 | 332 | 299 | 133 | 125 | 1 |
| 25 | 22 | V/7343-20 | T491V226(1)025A(2) | 5.5 | 6.0 | 0.7 | 423 | 381 | 169 | 125 | 1 |
| 25 | 33 | X/7343-43 | T491X336(1)025A(2) | 8.3 | 6.0 | 0.7 | 486 | 437 | 194 | 125 | 1 |
| 25 | 33 | D/7343-31 | T491D336(1)025A(2) | 8.3 | 6.0 | 0.7 | 463 | 417 | 185 | 125 | 1 |
| 25 | 33 | C/6032-28 | T491C336(1)025A(2) | 8.3 | 6.0 | 0.9 | 350 | 315 | 140 | 125 | 1 |
| 25 | 47 | X/7343-43 | T491X476(1)025A(2) | 11.8 | 6.0 | 0.7 | 486 | 437 | 194 | 125 | 1 |
| VDC at 85°C | µF | KEMET/EIA | (See below for part options) | µA at +25°C Maximum/ 5 Minutes | % at +25°C 120 Hz Maximum | Ω at +25°C 100 kHz Maximum | mA at +25°C 100 kHz | mA at +85°C 100 kHz | mA at +125°C 100 kHz | °C | Reflow Temp ≤ 260 °C |
| Rated Voltage | Rated Cap | Case Code/ Case Size | KEMET Part Number | DC Leakage | DF | ESR | Maximum Allowable Ripple Current (rms) | | | Maximum Operating Temp | MSL |

*(1) To complete KEMET part number, insert M for ±20% or K for ±10%. Designates Capacitance Tolerance.*
*(2) To complete KEMET part number, insert T = 100% Matte Tin (Sn)-plated, G = Gold-plated, H = Standard solder coated (SnPb 5% Pb minimum), N = Non-magnetic 100% Tin (Sn), M = Non-magnetic (SnPb). Designates Termination Finish.*
*Refer to Ordering Information for additional details.*
*Higher voltage ratings and tighter tolerance product including ESR may be substituted within the same size at KEMET's option. Voltage substitution will be marked with the higher voltage rating. Substitutions can include better than series.*

## Table 1 – Ratings & Part Number Reference cont.

| Rated Voltage | Rated Cap | Case Code/ Case Size | KEMET Part Number | DC Leakage | DF | ESR | Maximum Allowable Ripple Current (rms) | | | Maximum Operating Temp | MSL |
|---|---|---|---|---|---|---|---|---|---|---|---|
| VDC at 85°C | µF | KEMET/EIA | (See below for part options) | µA at +25°C Maximum/ 5 Minutes | % at +25°C 120 Hz Maximum | Ω at +25°C 100 kHz Maximum | mA at +25°C 100 kHz | mA at +85°C 100 kHz | mA at +125°C 100 kHz | °C | Reflow Temp ≤ 260 °C |
| 25 | 47 | D/7343-31 | T491D476(1)025A(2) | 11.8 | 6.0 | 0.7 | 463 | 417 | 185 | 125 | 1 |
| 25 | 68 | X/7343-43 | T491X686(1)025A(2) | 17.0 | 6.0 | 0.7 | 486 | 437 | 194 | 125 | 1 |
| 25 | 68 | D/7343-31 | T491D686(1)025A(2) | 17.0 | 10.0 | 0.7 | 463 | 417 | 185 | 125 | 1 |
| 25 | 100 | X/7343-43 | T491X107(1)025A(2) | 25.0 | 8.0 | 0.3 | 742 | 668 | 297 | 125 | 1 |
| 25 | 100 | E/7360-38 | T491E107(1)025A(2) | 25.0 | 8.0 | 0.5 | 632 | 569 | 253 | 125 | 1 |
| 35 | 0.1 | A/3216-18 | T491A104(1)035A(2) | 0.5 | 4.0 | 20.0 | 61 | 55 | 24 | 125 | 1 |
| 35 | 0.15 | A/3216-18 | T491A154(1)035A(2) | 0.5 | 4.0 | 19.0 | 63 | 57 | 25 | 125 | 1 |
| 35 | 0.22 | A/3216-18 | T491A224(1)035A(2) | 0.5 | 4.0 | 18.0 | 65 | 59 | 26 | 125 | 1 |
| 35 | 0.33 | A/3216-18 | T491A334(1)035A(2) | 0.5 | 4.0 | 15.0 | 71 | 64 | 28 | 125 | 1 |
| 35 | 0.47 | B/3528-21 | T491B474(1)035A(2) | 0.5 | 4.0 | 8.0 | 103 | 93 | 41 | 125 | 1 |
| 35 | 0.47 | A/3216-18 | T491A474(1)035A(2) | 0.5 | 4.0 | 11.0 | 79 | 71 | 32 | 125 | 1 |
| 35 | 0.68 | B/3528-21 | T491B684(1)035A(2) | 0.5 | 4.0 | 6.5 | 114 | 103 | 46 | 125 | 1 |
| 35 | 0.68 | A/3216-18 | T491A684(1)035A(2) | 0.5 | 4.0 | 8.0 | 97 | 87 | 39 | 125 | 1 |
| 35 | 1 | B/3528-21 | T491B105(1)035A(2) | 0.5 | 4.0 | 5.0 | 130 | 117 | 52 | 125 | 1 |
| 35 | 1 | A/3216-18 | T491A105(1)035A(2) | 0.5 | 4.0 | 7.0 | 104 | 94 | 42 | 125 | 1 |
| 35 | 1.5 | A/3216-18 | T491A155(1)035A(2) | 0.5 | 6.0 | 7.0 | 104 | 94 | 42 | 125 | 1 |
| 35 | 1.5 | C/6032-28 | T491C155(1)035A(2) | 0.5 | 6.0 | 4.5 | 156 | 140 | 62 | 125 | 1 |
| 35 | 1.5 | B/3528-21 | T491B155(1)035A(2) | 0.5 | 6.0 | 5.0 | 130 | 117 | 52 | 125 | 1 |
| 35 | 2.2 | C/6032-28 | T491C225(1)035A(2) | 0.8 | 6.0 | 3.2 | 185 | 167 | 74 | 125 | 1 |
| 35 | 2.2 | A/3216-18 | T491A225(1)035A(2) | 0.8 | 6.0 | 4.0 | 137 | 123 | 55 | 125 | 1 |
| 35 | 2.2 | B/3528-21 | T491B225(1)035A(2) | 0.8 | 6.0 | 4.0 | 146 | 131 | 58 | 125 | 1 |
| 35 | 3.3 | C/6032-28 | T491C335(1)035A(2) | 1.2 | 6.0 | 2.0 | 235 | 212 | 94 | 125 | 1 |
| 35 | 3.3 | B/3528-21 | T491B335(1)035A(2) | 1.2 | 6.0 | 3.5 | 156 | 140 | 62 | 125 | 1 |
| 35 | 3.3 | D/7343-31 | T491D335(1)035A(2) | 1.2 | 6.0 | 2.0 | 274 | 247 | 110 | 125 | 1 |
| 35 | 4.7 | D/7343-31 | T491D475(1)035A(2) | 1.6 | 6.0 | 1.5 | 316 | 284 | 126 | 125 | 1 |
| 35 | 4.7 | B/3528-21 | T491B475(1)035A(2) | 1.6 | 6.0 | 3.0 | 168 | 151 | 67 | 125 | 1 |
| 35 | 4.7 | C/6032-28 | T491C475(1)035A(2) | 1.6 | 6.0 | 2.0 | 235 | 212 | 94 | 125 | 1 |
| 35 | 6.8 | D/7343-31 | T491D685(1)035A(2) | 2.4 | 6.0 | 1.2 | 354 | 319 | 142 | 125 | 1 |
| 35 | 6.8 | V/7343-20 | T491V685(1)035A(2) | 2.4 | 6.0 | 1.2 | 323 | 291 | 129 | 125 | 1 |
| 35 | 6.8 | C/6032-28 | T491C685(1)035A(2) | 2.4 | 6.0 | 1.8 | 247 | 222 | 99 | 125 | 1 |
| 35 | 10 | D/7343-31 | T491D106(1)035A(2) | 3.5 | 6.0 | 1.0 | 387 | 348 | 155 | 125 | 1 |
| 35 | 10 | C/6032-28 | T491C106(1)035A(2) | 3.5 | 6.0 | 1.6 | 262 | 236 | 105 | 125 | 1 |
| 35 | 10 | V/7343-20 | T491V106(1)035A(2) | 3.5 | 6.0 | 1.0 | 250 | 225 | 100 | 125 | 1 |
| 35 | 15 | C/6032-28 | T491C156(1)035A(2) | 5.3 | 6.0 | 1.0 | 332 | 299 | 133 | 125 | 1 |
| 35 | 15 | X/7343-43 | T491X156(1)035A(2) | 5.3 | 6.0 | 0.9 | 428 | 385 | 171 | 125 | 1 |
| 35 | 15 | D/7343-31 | T491D156(1)035A(2) | 5.3 | 6.0 | 0.8 | 433 | 390 | 173 | 125 | 1 |
| 35 | 22 | X/7343-43 | T491X226(1)035A(2) | 7.7 | 6.0 | 0.7 | 486 | 437 | 194 | 125 | 1 |
| 35 | 22 | D/7343-31 | T491D226(1)035A(2) | 7.7 | 6.0 | 0.7 | 463 | 417 | 185 | 125 | 1 |
| 35 | 33 | X/7343-43 | T491X336(1)035A(2) | 11.6 | 6.0 | 0.6 | 524 | 472 | 210 | 125 | 1 |
| 35 | 33 | D/7343-31 | T491D336(1)035A(2) | 11.6 | 6.0 | 0.6 | 500 | 450 | 200 | 125 | 1 |
| 35 | 47 | X/7343-43 | T491X476(1)035A(2) | 16.5 | 6.0 | 0.6 | 524 | 472 | 210 | 125 | 1 |
| 35 | 47 | E/7360-38 | T491E476(1)035A(2) | 16.5 | 10.0 | 0.5 | 632 | 569 | 253 | 125 | 1 |
| 50 | 0.1 | A/3216-18 | T491A104(1)050A(2) | 0.5 | 4.0 | 20.0 | 61 | 55 | 24 | 125 | 1 |
| 50 | 0.15 | B/3528-21 | T491B154(1)050A(2) | 0.5 | 4.0 | 16.0 | 73 | 66 | 29 | 125 | 1 |
| 50 | 0.15 | A/3216-18 | T491A154(1)050A(2) | 0.5 | 4.0 | 15.0 | 71 | 64 | 28 | 125 | 1 |
| 50 | 0.22 | B/3528-21 | T491B224(1)050A(2) | 0.5 | 4.0 | 14.0 | 78 | 70 | 31 | 125 | 1 |
| VDC at 85°C | µF | KEMET/EIA | (See below for part options) | µA at +25°C Maximum/ 5 Minutes | % at +25°C 120 Hz Maximum | Ω at +25°C 100 kHz Maximum | mA at +25°C 100 kHz | mA at +85°C 100 kHz | mA at +125°C 100 kHz | °C | Reflow Temp ≤ 260 °C |
| Rated Voltage | Rated Cap | Case Code/ Case Size | KEMET Part Number | DC Leakage | DF | ESR | Maximum Allowable Ripple Current (rms) | | | Maximum Operating Temp | MSL |

*(1) To complete KEMET part number, insert M for ±20% or K for ±10%. Designates Capacitance Tolerance.*
*(2) To complete KEMET part number, insert T = 100% Matte Tin (Sn)-plated, G = Gold-plated, H = Standard solder coated (SnPb 5% Pb minimum), N = Non-magnetic 100% Tin (Sn), M = Non-magnetic (SnPb). Designates Termination Finish.*
*Refer to Ordering Information for additional details.*
*Higher voltage ratings and tighter tolerance product including ESR may be substituted within the same size at KEMET's option. Voltage substitution will be marked with the higher voltage rating. Substitutions can include better than series.*

## Table 1 – Ratings & Part Number Reference cont.

| Rated Voltage | Rated Cap | Case Code/ Case Size | KEMET Part Number | DC Leakage | DF | ESR | Maximum Allowable Ripple Current (rms) | | | Maximum Operating Temp | MSL |
|---|---|---|---|---|---|---|---|---|---|---|---|
| VDC at 85°C | µF | KEMET/EIA | (See below for part options) | µA at +25°C Maximum/ 5 Minutes | % at +25°C 120 Hz Maximum | Ω at +25°C 100 kHz Maximum | mA at +25°C 100 kHz | mA at +85°C 100 kHz | mA at +125°C 100 kHz | °C | Reflow Temp ≤ 260 °C |
| 50 | 0.22 | A/3216-18 | T491A224(1)050A(2) | 0.5 | 4.0 | 18.0 | 65 | 59 | 26 | 125 | 1 |
| 50 | 0.33 | A/3216-18 | T491A334(1)050A(2) | 0.5 | 4.0 | 14.0 | 73 | 66 | 29 | 125 | 1 |
| 50 | 0.33 | B/3528-21 | T491B334(1)050A(2) | 0.5 | 4.0 | 10.0 | 92 | 83 | 37 | 125 | 1 |
| 50 | 0.47 | A/3216-18 | T491A474(1)050A(2) | 0.5 | 4.0 | 9.5 | 280 | 253 | 112 | 125 | 1 |
| 50 | 0.47 | C/6032-28 | T491C474(1)050A(2) | 0.5 | 4.0 | 7.2 | 117 | 105 | 47 | 125 | 1 |
| 50 | 0.47 | B/3528-21 | T491B474(1)050A(2) | 0.5 | 4.0 | 9.0 | 97 | 87 | 39 | 125 | 1 |
| 50 | 0.68 | A/3216-18 | T491A684(1)050A(2) | 0.5 | 4.0 | 8.0 | 97 | 87 | 39 | 125 | 1 |
| 50 | 0.68 | C/6032-28 | T491C684(1)050A(2) | 0.5 | 4.0 | 6.4 | 125 | 113 | 50 | 125 | 1 |
| 50 | 0.68 | B/3528-21 | T491B684(1)050A(2) | 0.5 | 4.0 | 8.0 | 103 | 93 | 41 | 125 | 1 |
| 50 | 1 | A/3216-18 | T491A105(1)050A(2) | 0.5 | 4.0 | 7.0 | 104 | 94 | 42 | 125 | 1 |
| 50 | 1 | C/6032-28 | T491C105(1)050A(2) | 0.5 | 4.0 | 4.8 | 148 | 133 | 59 | 125 | 1 |
| 50 | 1 | B/3528-21 | T491B105(1)050A(2) | 0.5 | 6.0 | 6.0 | 119 | 107 | 48 | 125 | 1 |
| 50 | 1 | V/7343-20 | T491V105(1)050A(2) | 0.5 | 4.0 | 6.0 | 144 | 130 | 58 | 125 | 1 |
| 50 | 1.5 | D/7343-31 | T491D155(1)050A(2) | 0.8 | 6.0 | 3.5 | 207 | 186 | 83 | 125 | 1 |
| 50 | 1.5 | C/6032-28 | T491C155(1)050A(2) | 0.8 | 6.0 | 4.0 | 166 | 149 | 66 | 125 | 1 |
| 50 | 2.2 | D/7343-31 | T491D225(1)050A(2) | 1.1 | 6.0 | 2.5 | 245 | 221 | 98 | 125 | 1 |
| 50 | 2.2 | C/6032-28 | T491C225(1)050A(2) | 1.1 | 6.0 | 3.0 | 191 | 172 | 76 | 125 | 1 |
| 50 | 3.3 | C/6032-28 | T491C335(1)050A(2) | 1.7 | 6.0 | 2.0 | 235 | 212 | 94 | 125 | 1 |
| 50 | 3.3 | D/7343-31 | T491D335(1)050A(2) | 1.7 | 6.0 | 1.6 | 274 | 247 | 110 | 125 | 1 |
| 50 | 4.7 | C/6032-28 | T491C475(1)050A(2) | 2.4 | 4.0 | 1.4 | 280 | 252 | 112 | 125 | 1 |
| 50 | 4.7 | D/7343-31 | T491D475(1)050A(2) | 2.4 | 6.0 | 1.2 | 354 | 319 | 142 | 125 | 1 |
| 50 | 6.8 | X/7343-43 | T491X685(1)050A(2) | 3.4 | 6.0 | 0.8 | 406 | 365 | 162 | 125 | 1 |
| 50 | 6.8 | D/7343-31 | T491D685(1)050A(2) | 3.4 | 6.0 | 0.8 | 433 | 390 | 173 | 125 | 1 |
| 50 | 10 | X/7343-43 | T491X106(1)050A(2) | 5.0 | 6.0 | 0.7 | 486 | 437 | 194 | 125 | 1 |
| 50 | 10 | D/7343-31 | T491D106(1)050A(2) | 5.0 | 6.0 | 0.8 | 433 | 390 | 173 | 125 | 1 |
| 50 | 15 | X/7343-43 | T491X156(1)050A(2) | 7.5 | 8.0 | 0.7 | 486 | 437 | 194 | 125 | 1 |
| 50 | 22 | X/7343-43 | T491X226(1)050A(2) | 11.0 | 10.0 | 0.6 | 524 | 472 | 210 | 125 | 1 |
| VDC at 85°C | µF | KEMET/EIA | (See below for part options) | µA at +25°C Maximum/ 5 Minutes | % at +25°C 120 Hz Maximum | Ω at +25°C 100 kHz Maximum | mA at +25°C 100 kHz | mA at +85°C 100 kHz | mA at +125°C 100 kHz | °C | Reflow Temp ≤ 260 °C |
| Rated Voltage | Rated Cap | Case Code/ Case Size | KEMET Part Number | DC Leakage | DF | ESR | Maximum Allowable Ripple Current (rms) | | | Maximum Operating Temp | MSL |

*(1) To complete KEMET part number, insert M for ±20% or K for ±10%. Designates Capacitance Tolerance.*
*(2) To complete KEMET part number, insert T = 100% Matte Tin (Sn)-plated, G = Gold-plated, H = Standard solder coated (SnPb 5% Pb minimum), N = Non-magnetic 100% Tin (Sn), M = Non-magnetic (SnPb). Designates Termination Finish.*
*Refer to Ordering Information for additional details.*
*Higher voltage ratings and tighter tolerance product including ESR may be substituted within the same size at KEMET's option. Voltage substitution will be marked with the higher voltage rating. Substitutions can include better than series.*

## Recommended Voltage Derating Guidelines

| | −55°C to 85°C | 85°C to 125°C |
|---|---|---|
| % Change in working DC voltage with temperature | $V_R$ | 67% of $V_R$ |
| Recommended maximum application voltage | 50% of $V_R$ | 33% of $V_R$ |

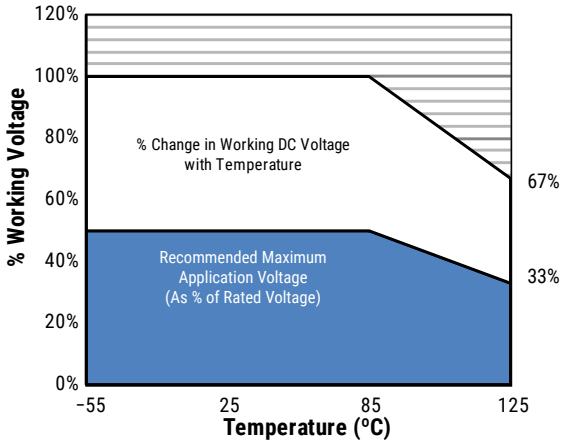


## Ripple Current/Ripple Voltage

Permissible AC ripple voltage and current are related to equivalent series resistance (ESR) and the power dissipation capabilities of the device. Permissible AC ripple voltage which may be applied is limited by two criteria:

1. The positive peak AC voltage plus the DC bias voltage, if any, must not exceed the DC voltage rating of the capacitor.
2. The negative peak AC voltage in combination with bias voltage, if any, must not exceed the allowable limits specified for the reverse voltage. See the Reverse Voltage section for allowable limits.

The maximum power dissipation by case size can be determined using the table at right. The maximum power dissipation rating stated in the table must be reduced with increasing environmental operating temperatures. Refer to the table below for temperature compensation requirements.

| Temperature Compensation Multipliers for Maximum Ripple Current | | |
|---|---|---|
| T ≤ 25°C | T ≤ 85°C | T ≤ 125°C |
| 1.00 | 0.90 | 0.40 |

*T = Environmental Temperature*

*The maximum power dissipation rating must be reduced with increasing environmental operating temperatures. Refer to the Temperature Compensation Multiplier table for details.*

| KEMET Case Code | EIA Case Code | Maximum Power Dissipation (P max) mWatts at 25°C w/+20°C Rise |
|---|---|---|
| A | 3216–18 | 75 |
| B | 3528–21 | 85 |
| C | 6032–28 | 110 |
| D | 7343–31 | 150 |
| X | 7343–43 | 165 |
| E | 7360–38 | 200 |
| M | 3528–15 | 120 |
| S | 3216–12 | 60 |
| T | 3528–12 | 70 |
| U | 6032–15 | 90 |
| V | 7343–20 | 125 |
| W | 7343–15 | 180 |
| T510X | 7343–43 | 270 |
| T510E | 7360–38 | 285 |

Using the P max of the device, the maximum allowable rms ripple current or voltage may be determined.

$I(max) = \sqrt{P\ max/R}$
$E(max) = Z\sqrt{P\ max/R}$

*I = rms ripple current (amperes)*
*E = rms ripple voltage (volts)*
*P max = maximum power dissipation (watts)*
*R = ESR at specified frequency (ohms)*
*Z = Impedance at specified frequency (ohms)*

## Reverse Voltage

Solid tantalum capacitors are polar devices and may be permanently damaged or destroyed if connected with the wrong polarity. The positive terminal is identified on the capacitor body by a stripe, plus, in some cases a beveled edge. A small degree of transient reverse voltage is permissible for short periods per the table. The capacitors should not be operated continuously in reverse mode, even within these limits.

| Temperature | Permissible Transient Reverse Voltage |
|---|---|
| 25°C | 15% of Rated Voltage |
| 85°C | 5% of Rated Voltage |
| 125°C | 1% of Rated Voltage |

## Table 2 – Land Dimensions/Courtyard

| KEMET | Metric Size Code | Density Level A: Maximum (Most) Land Protrusion (mm) | | | | | Density Level B: Median (Nominal) Land Protrusion (mm) | | | | | Density Level C: Minimum (Least) Land Protrusion (mm) | | | | |
|---|---|---|---|---|---|---|---|---|---|---|---|---|---|---|---|---|
| Case | EIA | W | L | S | V1 | V2 | W | L | S | V1 | V2 | W | L | S | V1 | V2 |
| A | 3216–18 | 1.35 | 2.20 | 0.62 | 6.02 | 2.80 | 1.23 | 1.80 | 0.82 | 4.92 | 2.30 | 1.13 | 1.42 | 0.98 | 4.06 | 2.04 |
| B | 3528–21 | 2.35 | 2.21 | 0.92 | 6.32 | 4.00 | 2.23 | 1.80 | 1.12 | 5.22 | 3.50 | 2.13 | 1.42 | 1.28 | 4.36 | 3.24 |
| C | 6032–28 | 2.35 | 2.77 | 2.37 | 8.92 | 4.50 | 2.23 | 2.37 | 2.57 | 7.82 | 4.00 | 2.13 | 1.99 | 2.73 | 6.96 | 3.74 |
| D | 7343–31 | 2.55 | 2.77 | 3.67 | 10.22 | 5.60 | 2.43 | 2.37 | 3.87 | 9.12 | 5.10 | 2.33 | 1.99 | 4.03 | 8.26 | 4.84 |
| M | 3528-15 | 2.35 | 2.20 | 0.92 | 6.32 | 4.00 | 2.23 | 1.80 | 1.12 | 5.22 | 3.50 | 2.13 | 1.42 | 1.28 | 4.36 | 3.24 |
| S[2] | 3216–12 | 1.35 | 2.20 | 0.62 | 6.02 | 2.80 | 1.23 | 1.80 | 0.82 | 4.92 | 2.30 | 1.13 | 1.42 | 0.98 | 4.06 | 2.04 |
| T | 3528–12 | 2.35 | 2.20 | 0.92 | 6.32 | 4.00 | 2.23 | 1.80 | 1.12 | 5.22 | 3.50 | 2.13 | 1.42 | 1.28 | 4.36 | 3.24 |
| U | 6032–15 | 2.35 | 2.77 | 2.37 | 8.92 | 4.50 | 2.23 | 2.37 | 2.57 | 7.82 | 4.00 | 2.13 | 1.99 | 2.73 | 6.96 | 3.74 |
| V | 7343–21 | 2.55 | 2.77 | 3.67 | 10.22 | 5.60 | 2.43 | 2.37 | 3.87 | 9.12 | 5.10 | 2.33 | 1.99 | 4.03 | 8.26 | 4.84 |
| W | 7343–15 | 2.55 | 2.77 | 3.67 | 10.22 | 5.60 | 2.43 | 2.37 | 3.87 | 9.12 | 5.10 | 2.33 | 1.99 | 4.03 | 8.26 | 4.84 |
| X[1] | 7343–43 | 2.55 | 2.77 | 3.67 | 10.22 | 5.60 | 2.43 | 2.37 | 3.87 | 9.12 | 5.10 | 2.33 | 1.99 | 4.03 | 8.26 | 4.84 |

***Density Level A:*** *For low-density product applications. Recommended for wave solder applications and provides a wider process window for reflow solder processes.*
***Density Level B:*** *For products with a moderate level of component density. Provides a robust solder attachment condition for reflow solder processes.*
***Density Level C:*** *For high component density product applications. Before adapting the minimum land pattern variations, the user should perform qualification testing based on the conditions outlined in IPC standard 7351 (IPC–7351).*
*[1] Height of these chips may create problems in wave soldering.*

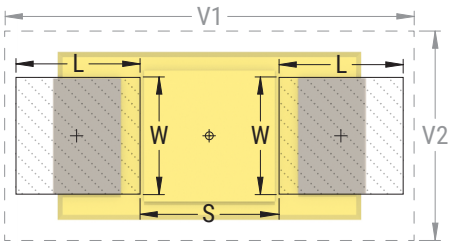

Grid Placement Courtyard

## Soldering Process

The KEMET families of surface mount capacitors are compatible with wave (single or dual), convection, IR, or vapor phase reflow techniques. Preheating of these components is recommended to avoid extreme thermal stress. KEMET's recommended profile conditions for convection and IR reflow reflect the profile conditions of the IPC/J-STD-020D standard for moisture sensitivity testing. The devices can safely withstand a maximum of three reflow passes at these conditions.

Please note that although the X/7343–43 case size can withstand wave soldering, the tall profile (4.3 mm maximum) dictates care in wave process development.

Hand soldering should be performed with care due to the difficulty in process control. If performed, care should be taken to avoid contact of the soldering iron to the molded case. The iron should be used to heat the solder pad, applying solder between the pad and the termination, until reflow occurs. Once reflow occurs, the iron should be removed immediately. "Wiping" the edges of a chip and heating the top surface is not recommended.

During typical reflow operations, a slight darkening of the gold-colored epoxy may be observed. This slight darkening is normal and not harmful to the product. Marking permanency is not affected by this change.

| Profile Feature | SnPb Assembly | Pb-Free Assembly |
|---|---|---|
| Preheat/Soak | | |
| Temperature Minimum ($T_{Smin}$) | 100°C | 150°C |
| Temperature Maximum ($T_{Smax}$) | 150°C | 200°C |
| Time ($t_s$) from $T_{smin}$ to $T_{smax}$) | 60 – 120 seconds | 60 – 120 seconds |
| Ramp-up Rate ($T_L$ to $T_P$) | 3°C/second maximum | 3°C/second maximum |
| Liquidous Temperature ($T_L$) | 183°C | 217°C |
| Time Above Liquidous ($t_L$) | 60 – 150 seconds | 60 – 150 seconds |
| Peak Temperature ($T_P$) | 220°C*<br>235°C** | 250°C*<br>260°C** |
| Time within 5°C of Maximum Peak Temperature ($t_P$) | 20 seconds maximum | 30 seconds maximum |
| Ramp-down Rate ($T_P$ to $T_L$) | 6°C/second maximum | 6°C/second maximum |
| Time 25°C to Peak Temperature | 6 minutes maximum | 8 minutes maximum |

*Note: All temperatures refer to the center of the package, measured on the package body surface that is facing up during assembly reflow.*
** For Case Size height > 2.5 mm*
*** For Case Size height ≤ 2.5 mm*

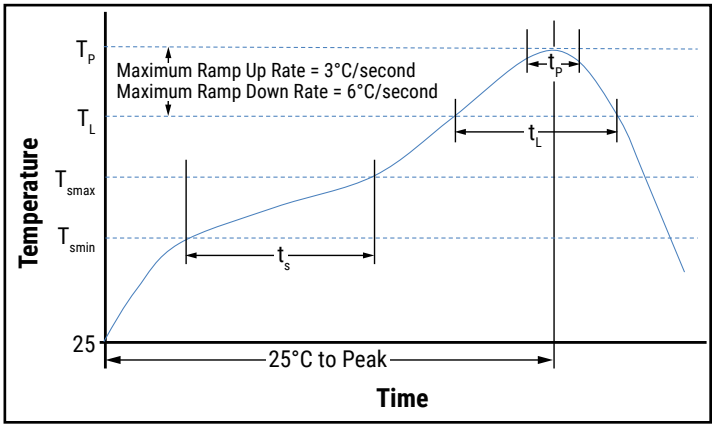


## Storage

Tantalum chip capacitors should be stored in normal working environments. While the chips themselves are quite robust in other environments, solderability will be degraded by exposure to high temperatures, high humidity, corrosive atmospheres, and long term storage. In addition, packaging materials will be degraded by high temperature – reels may soften or warp and tape peel force may increase. KEMET recommends that maximum storage temperature not exceed 40°C and maximum storage humidity not exceed 60% relative humidity. Temperature fluctuations should be minimized to avoid condensation on the parts and atmospheres should be free of chlorine and sulphur bearing compounds. For optimized solderability, chip stock should be used promptly, preferably within three years of receipt.

## Construction

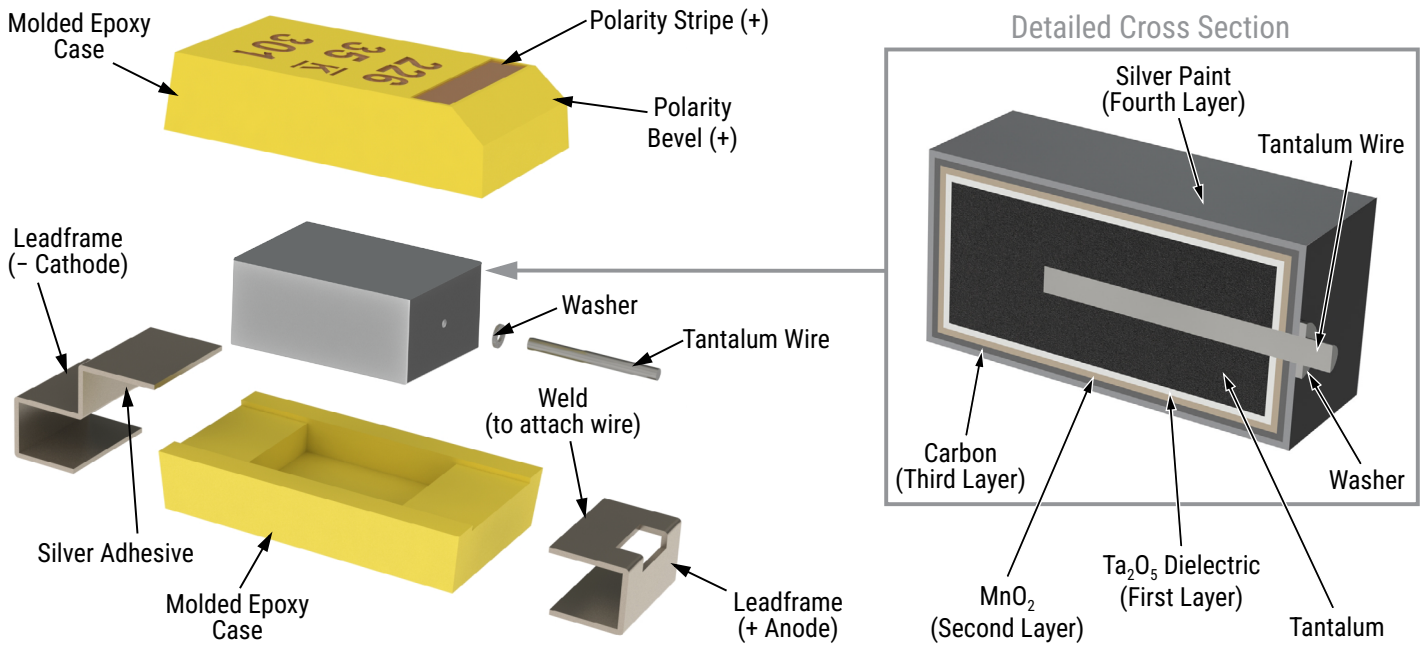


## Capacitor Marking

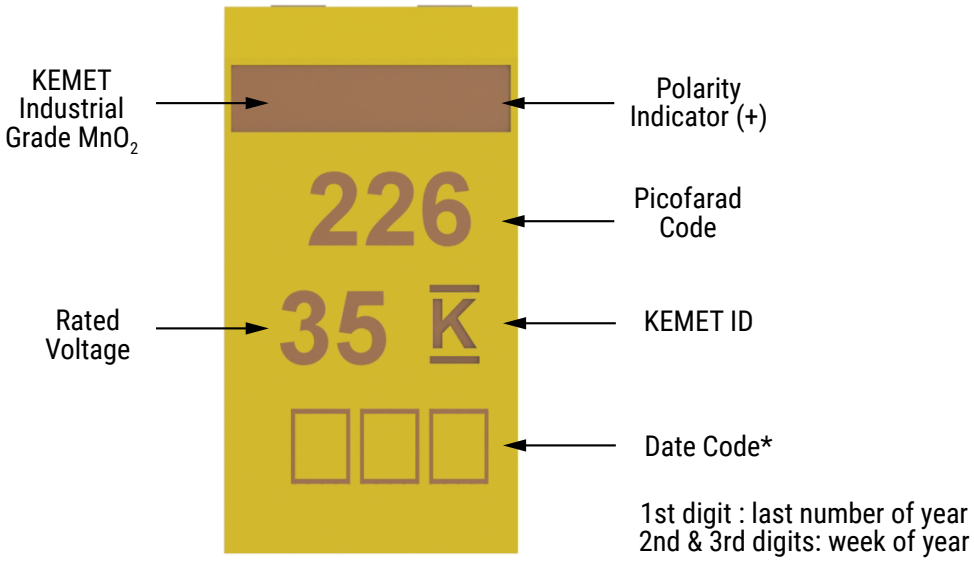

## Tape & Reel Packaging Information

KEMET's molded chip capacitor families are packaged in 8 and 12 mm plastic tape on 7" and 13" reels in accordance with *EIA Standard 481*: Embossed Carrier Taping of Surface Mount Components for Automatic Handling. This packaging system is compatible with all tape-fed automatic pick-and-place systems.

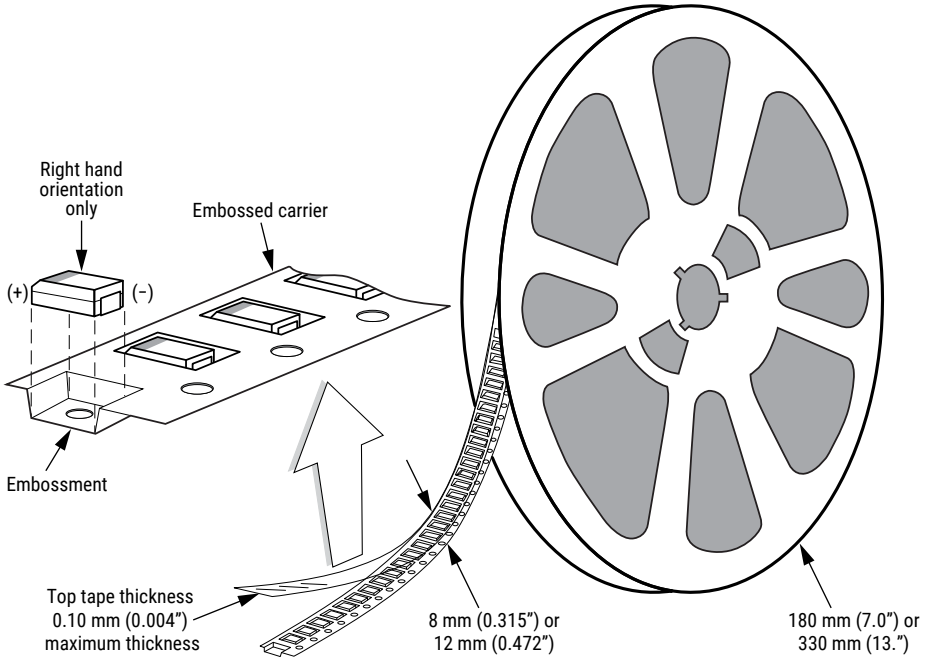


## Table 3 – Packaging Quantity

| Case Code | | Tape Width (mm) | 7" Reel* | 13" Reel* |
|---|---|---|---|---|
| KEMET | EIA | | | |
| S | 3216-12 | 8 | 2,500 | 10,000 |
| T | 3528-12 | 8 | 2,500 | 10,000 |
| M | 3528-15 | 8 | 2,500 | 8,000 |
| U | 6032-15 | 12 | 1,000 | 5,000 |
| L | 6032-19 | 12 | 1,000 | 3,000 |
| W | 7343-15 | 12 | 1,000 | 3,000 |
| Z | 7343-17 | 12 | 1,000 | 3,000 |
| V | 7343-20 | 12 | 1,000 | 3,000 |
| A | 3216-18 | 8 | 2,000 | 9,000 |
| B | 3528-21 | 8 | 2,000 | 8,000 |
| C | 6032-28 | 12 | 500 | 3,000 |
| D | 7343-31 | 12 | 500 | 2,500 |
| Q | 7343-12 | 12 | 1,000 | 3,000 |
| Y | 7343-40 | 12 | 500 | 2,000 |
| X | 7343-43 | 12 | 500 | 2,000 |
| E/T428P | 7360-38 | 12 | 500 | 2,000 |
| H | 7360-20 | 12 | 1,000 | 2,500 |
| O | 7360-43 | 12 | 250 | 1,000 |

** No C-Spec required for 7" reel packaging. C-7280 required for 13" reel packaging.*

## Figure 1 – Embossed (Plastic) Carrier Tape Dimensions

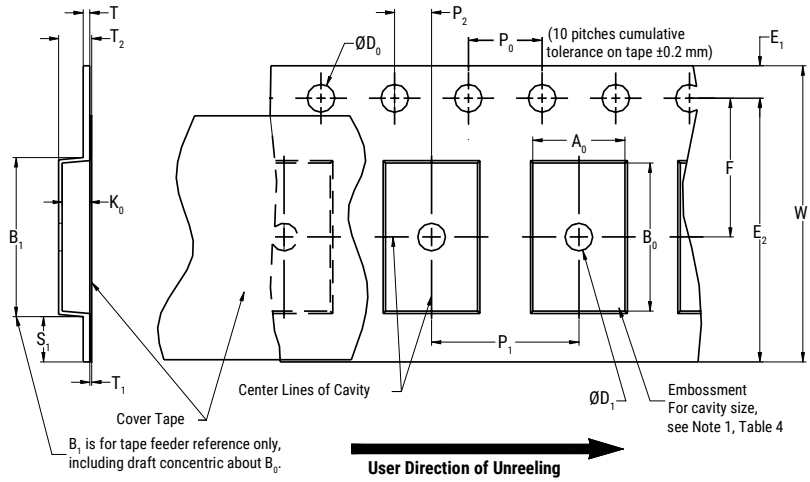


## Table 4 – Embossed (Plastic) Carrier Tape Dimensions

Metric will govern

| Constant Dimensions — Millimeters (Inches) | | | | | | | | | |
|---|---|---|---|---|---|---|---|---|---|
| Tape Size | $D_0$ | $D_1$ Minimum Note 1 | $E_1$ | $P_0$ | $P_2$ | R Reference Note 2 | $S_1$ Minimum Note 3 | T Maximum | $T_1$ Maximum |
| 8 mm | 1.5 +0.10/−0.0 (0.059 +0.004/−0.0) | 1.0 (0.039) | 1.75 ±0.10 (0.069 ±0.004) | 4.0 ±0.10 (0.157 ±0.004) | 2.0 ±0.05 (0.079 ±0.002) | 25.0 (0.984) | 0.600 (0.024) | 0.600 (0.024) | 0.100 (0.004) |
| 12 mm | | 1.5 (0.059) | | | | 30 (1.181) | | | |

| Variable Dimensions — Millimeters (Inches) | | | | | | | | |
|---|---|---|---|---|---|---|---|---|
| Tape Size | Pitch | $B_1$ Maximum Note 4 | $E_2$ Minimum | F | $P_1$ | $T_2$ Maximum | W Maximum | $A_0$, $B_0$ & $K_0$ |
| 8 mm | Single (4 mm) | 4.35 (0.171) | 6.25 (0.246) | 3.5 ±0.05 (0.138 ±0.002) | 4.0 ±0.10 (0.157 ±0.004) | 2.5 (0.098) | 8.3 (0.327) | Note 5 |
| 12 mm | Single (4 mm) and Double (8 mm) | 8.2 (0.323) | 10.25 (0.404) | 5.5 ±0.05 (0.217 ±0.002) | 4.0 ±0.10 (0.157 ±0.004) or 8.0 ±0.10 (0.315 ±0.004) | 4.6 (0.181) | 12.3 (0.484) | |

*1. The embossment hole location shall be measured from the sprocket hole controlling the location of the embossment. Dimensions of embossment location and hole location shall be applied independent of each other.*
*2. The tape, with or without components, shall pass around R without damage (see Figure 4).*
*3. If $S_1$ < 1.0 mm, there may not be enough area for cover tape to be properly applied (see EIA Standard 481–D, paragraph 4.3, section b).*
*4. $B_1$ dimension is a reference dimension for tape feeder clearance only.*
*5. The cavity defined by $A_0$, $B_0$ and $K_0$ shall surround the component with sufficient clearance that:*
*(a) the component does not protrude above the top surface of the carrier tape.*
*(b) the component can be removed from the cavity in a vertical direction without mechanical restriction, after the top cover tape has been removed.*
*(c) rotation of the component is limited to 20° maximum for 8 and 12 mm tapes (see Figure 2).*
*(d) lateral movement of the component is restricted to 0.5 mm maximum for 8 mm and 12 mm wide tape (see Figure 3).*
*(e) see Addendum in EIA Standard 481–D for standards relating to more precise taping requirements.*

## Packaging Information Performance Notes

**1. Cover tape break force:** 1.0 kg minimum.
**2. Cover tape peel strength:** The total peel strength of the cover tape from the carrier tape shall be:

| Tape Width | Peel Strength |
|---|---|
| 8 mm | 0.1 to 1.0 newton (10 to 100 gf) |
| 12 mm | 0.1 to 1.3 newton (10 to 130 gf) |

The direction of the pull shall be opposite the direction of the carrier tape travel. The pull angle of the carrier tape shall be 165° to 180° from the plane of the carrier tape. During peeling, the carrier and/or cover tape shall be pulled at a velocity of 300 ±10 mm/minute.
**3. Labeling:** Bar code labeling (standard or custom) shall be on the side of the reel opposite the sprocket holes. *Refer to EIA Standards 556 and 624*.

## Figure 2 – Maximum Component Rotation

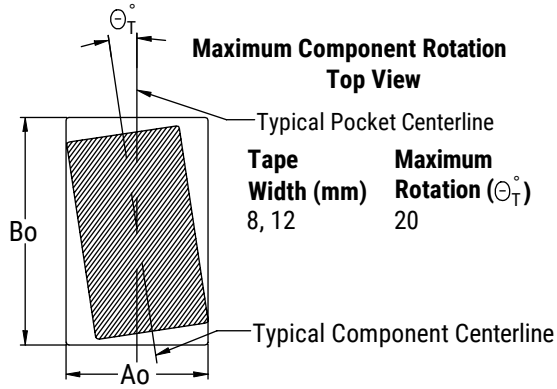


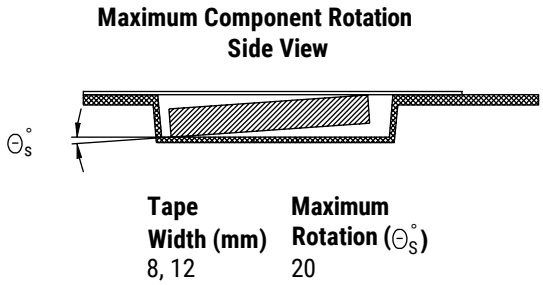


## Figure 3 – Maximum Lateral Movement

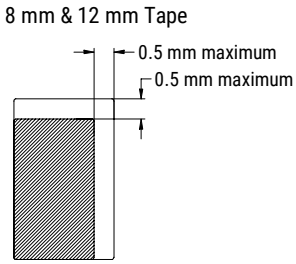


## Figure 4 – Bending Radius

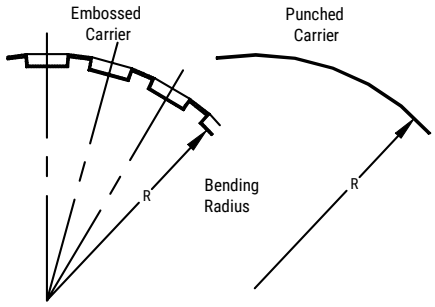

## Figure 5 – Reel Dimensions

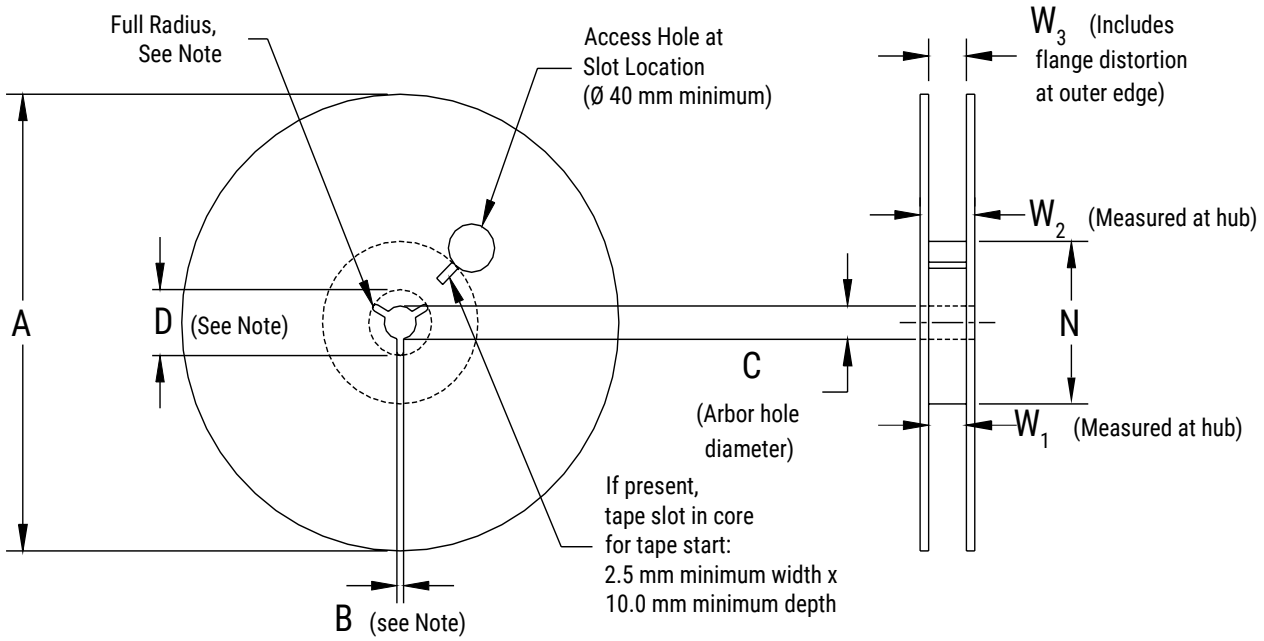


Note: Drive spokes optional; if used, dimensions B and D shall apply.

## Table 5 – Reel Dimensions

Metric will govern

| Constant Dimensions — Millimeters (Inches) | | | | |
|---|---|---|---|---|
| Tape Size | A | B Minimum | C | D Minimum |
| 8 mm | 178 ±0.20 (7.008 ±0.008) or 330 ±0.20 (13.000 ±0.008) | 1.5 (0.059) | 13.0 +0.5/−0.2 (0.521 +0.02/−0.008) | 20.2 (0.795) |
| 12 mm | | | | |

| Variable Dimensions — Millimeters (Inches) | | | | |
|---|---|---|---|---|
| Tape Size | N Minimum | $W_1$ | $W_2$ Maximum | $W_3$ |
| 8 mm | 50 (1.969) | 8.4 +1.5/−0.0 (0.331 +0.059/−0.0) | 14.4 (0.567) | Shall accommodate tape width without interference |
| 12 mm | | 12.4 +2.0/−0.0 (0.488 +0.078/−0.0) | 18.4 (0.724) | |

## Figure 6 – Tape Leader & Trailer Dimensions

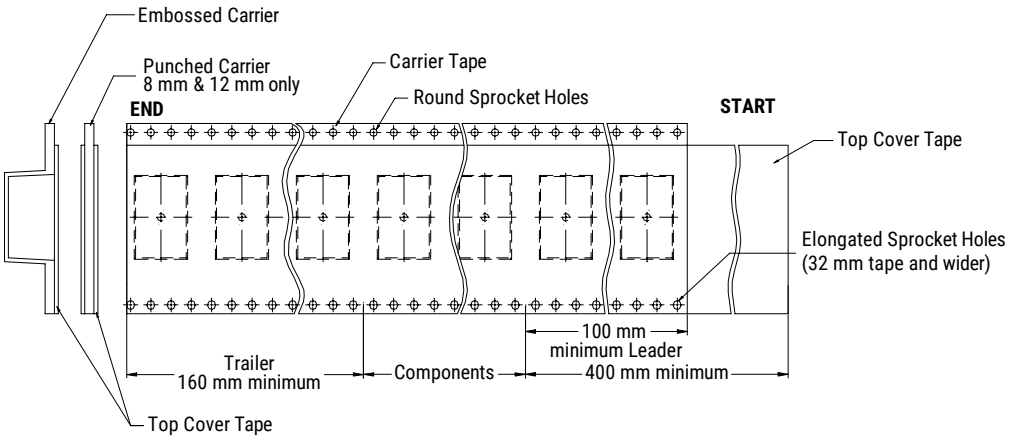


## Figure 7 – Maximum Camber

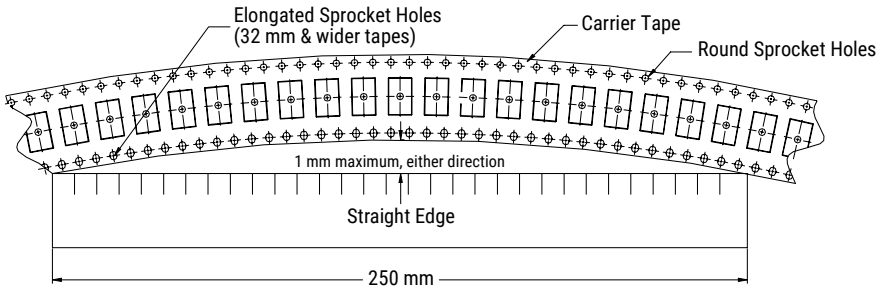

## KEMET Electronics Corporation Sales Offices

For a complete list of our global sales offices, please visit https://www.yageogroup.com/SalesResources/SalesOffices

## Disclaimer

YAGEO Corporation and its affiliates do not recommend the use of commercial or automotive grade products for high reliability applications or manned space flight.

All product specifications, statements, information and data (collectively, the "Information") in this datasheet are subject to change. The customer is responsible for checking and verifying the extent to which the Information contained in this publication is applicable to an order at the time the order is placed. All Information given herein is believed to be accurate and reliable, but it is presented without guarantee, warranty, or responsibility of any kind, expressed or implied.

Statements of suitability for certain applications are based on KEMET Electronics Corporation's ("KEMET") knowledge of typical operating conditions for such applications, but are not intended to constitute – and KEMET specifically disclaims – any warranty concerning suitability for a specific customer application or use. The Information is intended for use only by customers who have the requisite experience and capability to determine the correct products for their application. Any technical advice inferred from this Information or otherwise provided by KEMET with reference to the use of KEMET's products is given gratis, and KEMET assumes no obligation or liability for the advice given or results obtained.

Although KEMET designs and manufactures its products to the most stringent quality and safety standards, given the current state of the art, isolated component failures may still occur. Accordingly, customer applications which require a high degree of reliability or safety should employ suitable designs or other safeguards (such as installation of protective circuitry or redundancies) in order to ensure that the failure of an electrical component does not result in a risk of personal injury or property damage.

Although all product–related warnings, cautions and notes must be observed, the customer should not assume that all safety measures are indicated or that other measures may not be required.

*KEMET is a registered trademark of KEMET Electronics Corporation.*

## Looking for pricing, stock, or lifecycle information?

Click below to explore more details on WIN SOURCE:

- View T491C227M010AT on WIN SOURCE
- Kemet Information

## Optimize Your Supply Chain with WIN SOURCE Solutions

- Global Sourcing Solution
- Obsolete Management
- Cost Control Management
- Shortage Management
- Alternative Solution
- Excess Inventory Management