MAX-M10N-00B

Standard precision GNSS module
Professional grade

Data sheet

Abstract

This Data sheet describes the MAX-M10N-00B module, a GNSS receiver for high-performance tracking applications featuring upgradeable firmware. MAX-M10N-00B is optimized for the highest RF sensitivity.

UBXDOC-963802114-13143 - R05
C1-Public

www.u-blox.com

Document information

Title	**MAX-M10N-00B**	
Subtitle	Standard precision GNSS module	
Document type	Data sheet	
Document number	UBXDOC-963802114-13143	
Revision and date	R05	31-Oct-2025
Disclosure restriction	C1-Public	

Product status	Corresponding content status	
Functional sample	Draft	For functional testing. Revised and supplementary data will be published later.
In development / prototype	Objective specification	Target values. Revised and supplementary data will be published later.
Engineering sample	Advance information	Data based on early testing. Revised and supplementary data will be published later.
Initial production	Early production information	Data from product verification. Revised and supplementary data may be published later.
Mass production / End of life	Production information	Document contains the final product specification.

This document applies to the following products:

Product name	Type number	FW version	IN/PCN reference	Product status
MAX-M10N	MAX-M10N-00B-00	EXT SPG 5.30	UBXDOC-304424225-20540	Initial production

u-blox or third parties may hold intellectual property rights in the products, names, logos and designs included in this document. Copying, reproduction, or modification of this document or any part thereof is only permitted with the express written permission of u-blox. Disclosure to third parties is permitted for clearly public documents only.

The information contained herein is provided "as is" and u-blox assumes no liability for its use. No warranty, either express or implied, is given, including but not limited to, with respect to the accuracy, correctness, reliability and fitness for a particular purpose of the information. This document may be revised by u-blox at any time without notice. For the most recent documents and product statuses, visit www.u-blox.com.

Copyright © 2025, u-blox AG.

Contents

Document information **2**
Contents **3**
1 Functional description **4**
1.1 Overview 4
1.2 Performance 4
1.3 Supported GNSS constellations 6
1.4 Supported protocols 7
1.5 Firmware features 7
2 Block diagram **9**
3 Pin definition **10**
3.1 Pin assignment 10
4 Electrical specifications **11**
4.1 Absolute maximum ratings 11
4.2 Operating conditions 11
4.3 Indicative power requirements 12
5 Communication interfaces **14**
5.1 UART 14
5.2 Default interface settings 14
6 Mechanical specifications **15**
7 Qualifications and approvals **16**
8 Product handling **17**
8.1 Packaging 17
8.1.1 Reels 17
8.1.2 Tapes 17
8.2 Soldering 17
9 Product marking and ordering information **18**
9.1 Product marking 18
9.2 Product identifiers 18
9.3 Ordering codes 19
Related documents **20**
Revision history **21**
Contact **22**

1 Functional description

1.1 Overview

MAX-M10N features the u-blox M10 standard precision GNSS platform and provides exceptional sensitivity and acquisition time for L1 GNSS signals. MAX-M10N supports concurrent reception of three major GNSS constellations (GPS, Galileo, and BeiDou).

The firmware upgradeable MAX-M10N integrates a flash memory for the firmware image. The integrated flash memory also offers additional functionality including extended AssistNow™ data storage.

MAX-M10N grants lifetime access to AssistNow Live Orbits. This premium assistance service does not only offer improved time-to-first-fix (TTFF), but also improves position accuracy, especially in typical IoT applications with integrated antennas.

The u-blox low energy accurate position (LEAP) technology reduces the power consumption while retaining superior position accuracy.

The u-blox Super-Signal (Super-S) technology improves the dynamic position accuracy with small antennas.

The MAX-M10N product variants offer an optimized RF front-end either for the highest immunity or the best sensitivity in passive antenna designs. The MAX-M10N variants are summarized in Table 1.

Product name	RF front-end	Description
MAX-M10N-00B (this product)	LNA-SAW	Best sensitivity for designs with small antennas
MAX-M10N-10B	SAW-LNA-SAW	Highest immunity e.g. for designs with a cellular modem

Table 1: MAX-M10N product variants

MAX-M10N offers backwards pin-to-pin compatibility with products from the previous u-blox generations saving the designer's effort and reducing cost when upgrading designs to the advanced low-power u-blox M10 GNSS technology.

1.2 Performance

Parameter	Specification	Value
Receiver type		u-blox M10 receiver
Frequency of time pulse signal [1]		Default 1PPS (0.25 Hz to 10 MHz configurable)
Accuracy of time pulse signal [1]	RMS 99%	30 ns 60 ns
Operational limits [2]	Dynamics Altitude Velocity	≤ 4 g 80,000 m 500 m/s
Velocity accuracy [3]	Full-power mode LEAP mode	0.05 m/s 0.05 m/s

1 Time pulse is supported only in full-power mode.

2 Assuming Airborne 4 g platform.

3 Median at 30 m/s for dynamic operation.

Parameter	Specification	Value
Dynamic heading accuracy [3]	Full-power mode	0.3 deg
	LEAP mode	5 deg
Position accuracy (CEP) [4, 5]	Full-power mode with RTCM	1 m
	Full-power mode	1.5 m
	LEAP mode	1.5 m

Table 2: MAX-M10N-00B specifications

Table 3 shows typical performance values in multi-GNSS configurations. QZSS and SBAS are enabled in all measurements.

Parameter		GPS+GAL	GPS+GAL +BDS B1I (default)	GPS+GAL +BDS B1C
Full-power mode (default)				
Max navigation update rate [6]		20 Hz	10 Hz	10 Hz
Time To First Fix (TTFF) [4, 7, 8]	Cold start	28 s	27 s	28 s
	Hot start	2 s	2 s	2 s
	AssistNow Live Orbits [9]	2 s	2 s	2 s
	AssistNow Predictive Orbits [10]	3 s	3 s	3 s
	AssistNow Autonomous [11]	4 s	4 s	4 s
Sensitivity [12]	Tracking and navigation [13]	–167 dBm	–167 dBm	–167 dBm
	Reacquisition	–160 dBm	–160 dBm	–160 dBm
	Cold Start	–148 dBm	–148 dBm	–148 dBm
	Hot start [7]	–159 dBm	–159 dBm	–159 dBm
LEAP mode				
Max navigation update rate [6]		1 Hz	1 Hz	1 Hz
Time To First Fix (TTFF) [4, 7, 8]	Cold start	28 s	27 s	28 s
	Hot start	2 s	2 s	2 s
	AssistNow Live Orbits [9]	2 s	2 s	2 s
	AssistNow Predictive Orbits [10]	3 s	3 s	3 s
	AssistNow Autonomous [11]	4 s	4 s	4 s
Sensitivity [12]	Tracking and navigation	–159 dBm	–159 dBm	–159 dBm
	Reacquisition	–158 dBm	–158 dBm	–158 dBm
	Cold Start	–148 dBm	–148 dBm	–148 dBm

4 GPS is always in combination with another GNSS constellation, SBAS and QZSS.
5 CEP, 50%, 24 hours static, –130 dBm, > 6 SVs for each GNSS system.
6 Minimum 98% fix rate under typical conditions.
7 Commanded starts.
8 All satellites at –130 dBm. Measured at room temperature.
9 Dependent on the speed and latency of the aiding data connection, commanded starts.
10 Using seven days old AssistNow Predictive Orbits data. External memory may be required.
11 Using two days old orbital predicted data. External memory may be required.
12 Demonstrated with a good external LNA. Measured at room temperature.
13 Ultra-high sensitivity mode

Parameter		GPS+GAL	GPS+GAL +BDS B1I (default)	GPS+GAL +BDS B1C
	Hot Start [7]	–159 dBm	–159 dBm	–159 dBm

Table 3: MAX-M10N-00B typical performance in multi-constellation GNSS modes.

Table 4 shows typical performance values in single-GNSS configurations.

Parameter		GPS	BDS B1I	GAL	BDS B1C
Full-power mode (default)					
Max navigation update rate [6]		25 Hz	25 Hz	25 Hz	25 Hz
Position accuracy (CEP) [4, 5]		1.5 m	2 m	3 m	2 m
Time To First Fix (TTFF) [4, 7, 8]	Cold start	29 s	30 s	41 s	56 s
	Hot start	2 s	2 s	2 s	2 s
	AssistNow Live Orbits [9]	2 s	2 s	6 s	N/A
Sensitivity [12]	Tracking and navigation [13]	–167 dBm	–160 dBm	–161 dBm	–163 dBm
	Reacquisition	–160 dBm	–158 dBm	–154 dBm	–156 dBm
	Cold Start	–148 dBm	–146 dBm	–141 dBm	–136 dBm
	Hot start [7]	–159 dBm	–159 dBm	–155 dBm	–157 dBm

Table 4: MAX-M10N-00B typical performance in single-GNSS modes

1.3 Supported GNSS constellations

MAX-M10N-00B is a concurrent GNSS receiver that can receive and track multiple GNSS systems. To achieve lower power consumption, the receiver can be configured for a subset of GNSS constellations.

The default configuration on MAX-M10N-00B is concurrent reception of GPS, Galileo, and BeiDou B1I with QZSS and SBAS enabled.

The following GNSS and their signals are supported:

System	Signals
GPS / QZSS	L1C/A (1575.42 MHz)
Galileo	E1-B/C (1575.42 MHz)
BeiDou [14]	B1I (1561.098 MHz), B1C (1575.42 MHz)

Table 5: Supported GNSS and signals on MAX-M10N-00B

The following GNSS assistance services are supported:

Service	Support
AssistNow Live Orbits	GPS L1C/A, Galileo E1, QZSS L1C/A, BeiDou B1I
AssistNow Predictive Orbits	GPS L1C/A, Galileo E1 , QZSS L1C/A, BeiDou B1I
AssistNow Autonomous	GPS L1C/A, Galileo E1, QZSS L1C/A, BeiDou B1I

Table 6: Supported Assisted GNSS (A-GNSS) services

The following augmentation systems are supported:

14 BeiDou B1I cannot be enabled simultaneously with BeiDou B1C.

System	Support
SBAS	EGNOS, GAGAN, MSAS, WAAS, BDSBAS, KASS and SouthPAN
QZSS	L1S (SLAS), L1Sb (SBAS)

Table 7: Supported augmentation systems

☞ The SBAS and QZSS augmentation systems can be enabled only if GPS operation is also enabled.

1.4 Supported protocols

MAX-M10N-00B supports the following interface protocols:

Protocol	Type
UBX	Input/output, binary, u-blox proprietary
NMEA versions 2.1, 2.3, 4.0, 4.10 and 4.11 (default)	Input/output, ASCII
RTCM 3.4	Input, binary

Table 8: Supported protocols

1.5 Firmware features

Feature	Description
Upgradeable firmware	Firmware in flash memory can be upgraded
Antenna supervisor[15]	Antenna supervisor for active antenna control and short detection
External LNA control (LNA_EN signal)	Automatic enable/disable of external LNA or active antenna to save power
CloudLocate GNSS	Extends the life of energy-constrained IoT applications. Small payload messages supported.
Assisted GNSS	AssistNow Live Orbits, AssistNow Predictive Orbits and AssistNow Autonomous
RTCM support	Improved position accuracy with RTCM input data
Assisted GNSS	AssistNow Live Orbits lifetime access, AssistNow Predictive Orbits lifetime access, and AssistNow Autonomous
Backup modes	Hardware backup mode and software standby mode
Power save mode	Low energy accurate positioning (LEAP) reduces the power consumption while retaining superior position accuracy
Super-S	Improved accuracy with small antennas
Galileo return link messages	Galileo search and rescue (SAR) return link messages (RLM) via Galileo satellite signal
Data batching	Stores position/velocity/time information over up to 10 min in RAM without host interaction
Odometer	Measures traveled distance with support for different user profiles
Data logging	Stores position/velocity/time information on the embedded flash memory without host interaction
Geofencing	Up to 4 circular areas; GPIO for waking up external CPU

Table 9: Firmware features

Feature	Description
Anti-jamming	RF interference and jamming detection and reporting
Anti-spoofing	Spoofing detection and reporting
Configuration lockdown	Receiver configuration can be locked by command

[15] External components required, some pins need to be reconfigured.

Feature	Description
Message integrity	All messages can be cryptographically signed
Secure boot	Only signed firmware images are executed

Table 10: Security features

2 Block diagram

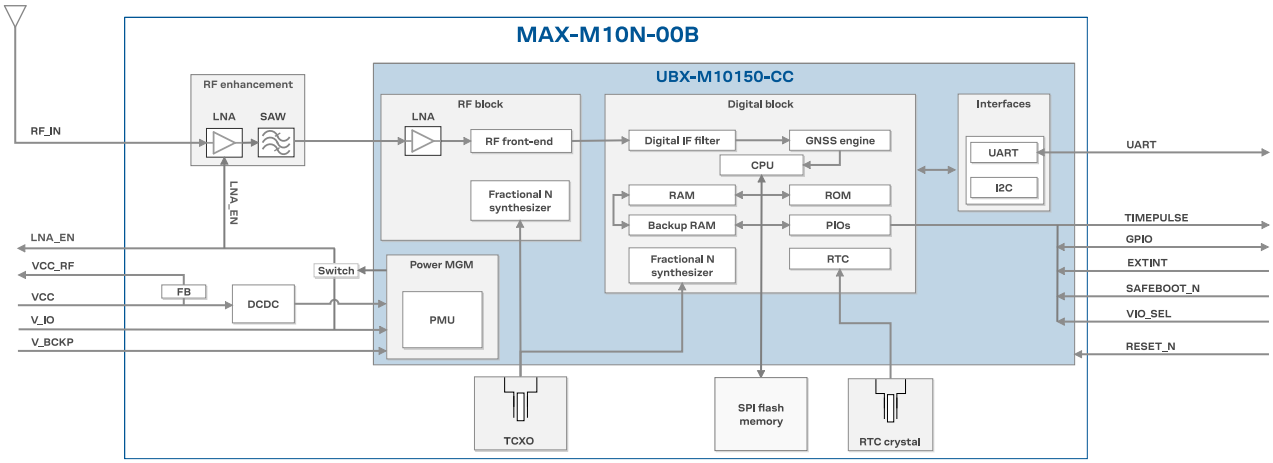

Figure 1: MAX-M10N-00B block diagram

3 Pin definition

3.1 Pin assignment

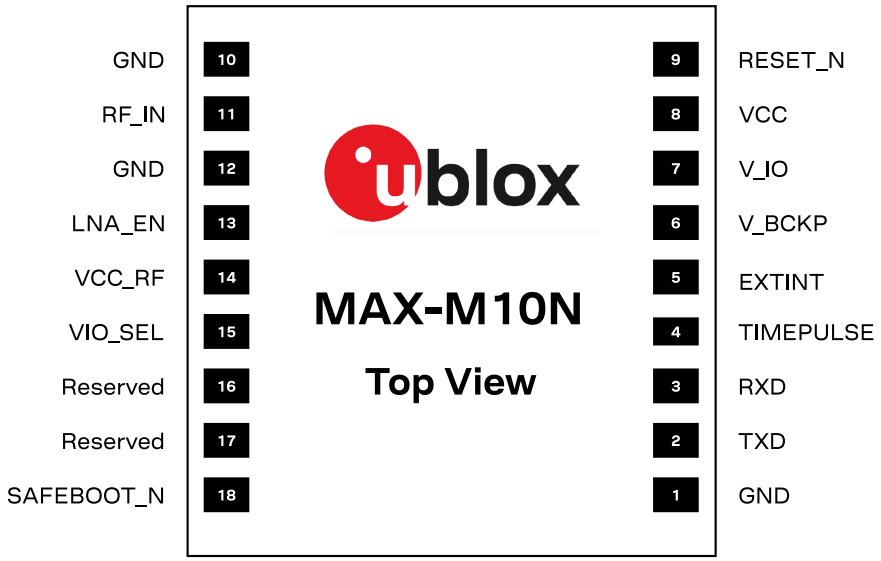

Figure 2: MAX-M10N-00B pin assignment

Pin no.	Name	PIO no.	I/O	Description
1	GND	-	-	Connect to GND
2	TXD	1	O	UART TX. Leave open if not used.
3	RXD	0	I	UART RX. Leave open if not used.
4	TIMEPULSE	4	O	Time pulse signal (shared with SAFEBOOT_N pin)[16]
5	EXTINT	5	I	External interrupt. Leave open if not used.
6	V_BCKP	-	I	Backup voltage supply
7	V_IO	-	I	IO voltage supply
8	VCC	-	I	Main voltage supply
9	RESET_N	-	I	System reset (active low). Has to be low for at least 1 ms to trigger a reset.
10	GND	-	-	Connect to GND
11	RF_IN	-	I	GNSS signal input
12	GND	-	-	Connect to GND
13	LNA_EN	-	O	On/Off external LNA or active antenna[17]
14	VCC_RF	-	O	Output voltage RF section
15	VIO_SEL	-	I	Voltage selector for V_IO supply. Connect to GND for 1.8 V supply, or leave open for 3.3 V supply.
16	Reserved	-	-	Not connected
17	Reserved	-	-	Not connected
18	SAFEBOOT_N	-	I	Safeboot mode (active low). Leave open if not used.[16]

Table 11: MAX-M10N-00B pin assignment

16 The receiver enters safeboot mode if this pin is low at start up. The SAFEBOOT_N pin is internally connected to TIMEPULSE pin through a 1 kΩ series resistor.
17 LNA_EN is connected to the V_IO supply voltage through a transistor switch.

4 Electrical specifications

4.1 Absolute maximum ratings

⚠ CAUTION. Risk of device damage. Exceeding the absolute maximum ratings may affect the lifetime and reliability of the device or permanently damage it. Do not exceed the absolute maximum ratings.

⚠ This product is not protected against overvoltage or reversed voltages. Use appropriate protection to avoid device damage from voltage spikes exceeding the specified boundaries.

Symbol	Parameter	Min	Max	Unit
VCC	Main supply voltage	–0.3	6	V
V_IO	IO supply voltage, VIO_SEL = GND	–0.3	1.98	V
	IO supply voltage, VIO_SEL = open	–0.3	3.6	V
	Voltage ramp on V_IO [18]	25	35000	µs/V
V_BCKP	Backup supply voltage	–0.3	3.6	V
V_PIO	Input voltage on RESET_N and digital pins VIO_SEL = GND	–0.3	V_IO + 0.3 (max 1.98)	V
	Input voltage on RESET_N and digital pins VIO_SEL = open	–0.3	V_IO + 0.3 (max 3.6)	V
I_PIO	Max source / sink current, digital pins [19]	–10	10	mA
ICC_RF	Max source current, VCC_RF		250	mA
V_DC_{rfin}	DC voltage at RF_IN	–5.5	+5.5	V
P_{rfin}	RF input power at RF_IN [20]		0	dBm
T_{amb}	Ambient temperature	–40	+85	°C
T_s	Storage temperature	–40	+85	°C

Table 12: Absolute maximum ratings

4.2 Operating conditions

Table 13 shows the general operating conditions. Table 14 shows the electrical parameters for digital I/O.

☞ The V_IO voltage range is selected with the VIO_SEL pin.

⚠ For designs with 1.8 V supply at V_IO and V_BCKP supplied, switch off the V_IO supply 100 ms before VCC when transitioning to the hardware backup mode. Alternatively, put the receiver to software standby mode by sending the UBX-RXM-PMREQ message before switching off V_IO and VCC. For designs with 3 V supplies, both supplies can be switched off simultaneously. Alternatively, switch off V_IO before VCC.

Symbol	Parameter	Min	Typical	Max	Unit
VCC	Main supply voltage	1.76	1.8, 3.3	5.5	V
V_IO	IO supply voltage, VIO_SEL = GND	1.76	1.8	1.98	V
	IO supply voltage, VIO_SEL = open	2.7	3.3	3.6	V

18 Exceeding the voltage ramp speed may permanently damage the device.

19 The SAFEBOOT_N pin has an internal 1 kΩ series resistor.

20 Test conditions: source impedance = 50 Ω, continuous wave.

Symbol	Parameter	Min	Typical	Max	Unit
V_BCKP	Supply voltage, backup domain	1.65		3.6	V
V_IO_{SWITCH}	V_IO voltage threshold to switch an internal supply for the backup domain from V_IO to V_BCKP		1.45		V
VCC_RF	VCC_RF output voltage		VCC - 0.1		V
ICC_RF	VCC_RF output current			50	mA
Z_{in} [21]	Input impedance at RF_IN		50		Ω
NF_{tot}	Receiver chain noise figure		1.5		dB
Ext_gain [22]	External gain at RF_IN, low gain mode (default)			30	dB
	External gain at RF_IN, bypass mode	10	25	40	dB
T_{opr}	Operating temperature	-40		+85	°C

Table 13: General operating conditions

Symbol	Parameter	Min	Typical	Max	Unit
I_{leak}	Leakage current input pins [23]		25		nA
V_{in}	Input pin voltage range	0		V_IO	V
V_{il}	Low-level input voltage			0.63	V
V_{ih}	High-level input voltage	0.68 x V_IO			V
V_{ol}	Low-level output voltage, Iout = -2 mA [17, 24]			0.4	V
V_{oh}	High-level output voltage, Iout = 2 mA [17, 24]	V_IO - 0.4			V
$R_{pu, IO}$	Pull-up resistance, Digital IO [25]. VIO_SEL = GND	6	17	72	kΩ
$R_{pu, IO}$	Pull-up resistance, Digital IO [25]. VIO_SEL = open	8	18	40	kΩ
$R_{pd, IO}$	Pull-down resistance, Digital IO	21	80	180	kΩ
$R_{pu, SAFEBOOT_N}$	Pull-up resistance, SAFEBOOT_N [26]	6	17	72	kΩ
$R_{pu, RESET_N}$	Pull-up resistance, RESET_N	7	10	13	kΩ

Table 14: Digital IO

4.3 Indicative power requirements

This section provides examples of typical current requirements. They are characterized on samples using a cold start command. The actual power requirements may vary depending on the firmware version used, the external circuitry, the number of satellites tracked, the signal strength, the type and time of start, duration, internal LNA gain mode, and the test conditions.

All values in Table 15, Table 16 and Table 17 have been measured at 25 °C ambient temperature with the default configuration unless otherwise stated. SBAS and QZSS are active in all measurements in full-power mode.

Table 15 shows indicative current consumption for VCC and V_IO with a 3.0 V supply.

21 The RF_IN input integrates a built-in DC block.

22 The internal LNA gain is configurable.

23 V_{in} = V_IO, at room temperature.

24 TIMEPULSE (PIO4) has 4 mA current drive/sink capability.

25 TXD, RXD, TIMEPULSE, and EXTINT.

26 The SAFEBOOT_N pin has an additional 1 kΩ series resistor.

Symbol (Parameter)	Conditions	GPS	GPS+GAL	GPS+GAL +BDS B1I (default)	GPS+GAL +BDS B1C	Unit
I_{VCC} [27, 28] (Current at VCC)	Acquisition [29]	6	7.5	9.5	9.5	mA
	Tracking	5	6	7	7	mA
	Power-optimized tracking (LEAP) [30]	2.5	2.7	3.0	2.9	mA
I_{V_IO} [27] (Current at V_IO)	Acquisition and Tracking	3.7	3.7	3.7	3.7	mA
	Power-optimized tracking (LEAP)[30]	2.6	2.6	2.6	2.6	mA

Table 15: Typical currents for 3.0 V supply at VCC and V_IO

Table 16 shows indicative current consumption for VCC and V_IO with a 1.8 V supply.

Symbol (Parameter)	Conditions	GPS	GPS+GAL	GPS+GAL +BDS B1I (default)	GPS+GAL +BDS B1C	Unit
I_{VCC} [27, 28] (Current at VCC)	Acquisition[29]	9	12.5	16	16	mA
	Tracking	8.5	10	11.5	11.5	mA
	Power-optimized tracking (LEAP)[30]	4.2	4.5	5	4.9	mA
I_{V_IO}[27] (Current at V_IO)	Acquisition and Tracking	3.7	3.7	3.7	3.7	mA
	Power-optimized tracking (LEAP)[30]	2.6	2.6	2.6	2.6	mA

Table 16: Typical current consumption for 1.8 V supply at VCC and V_IO

☞ The inrush current can go up to 100 mA at startup. Ensure that the external power supply is able to deliver up to 100 mA.

Table 17 shows current consumption for the backup modes.

Symbol	Parameter	Conditions	Typ.	Unit
I_{V_BCKP} [31]	Total current in hardware backup mode	V_BCKP = 3.3 V, V_IO = VCC = 0 V	34	µA
I_{V_IO}	V_IO current in software standby mode	V_IO = 1.8 V	37	µA
		V_IO = 3.3 V	46	µA
I_{VCC}	VCC current in software standby mode	VCC = 3.3 V	3.6	µA

Table 17: Backup currents

☞ Extreme operating temperatures can significantly impact the specified values. If an application operates near the min or max temperature limits, ensure the specified values are not exceeded.

27 1 Hz navigation update rate.

28 Internal LNA set to low gain. Simulated signal using power levels of -130 dBm.

29 Average current from start-up until the first fix.

30 The power-optimized tracking state is only supported in LEAP mode.

31 I_{V_BCKP} current in normal operation (V_BCKP = 3.3 V, V_IO = VCC = 3.3V) is ~3 µA.

5 Communication interfaces

The receiver supports communication over the UART only.

All the inputs have an internal pull-up resistor in normal operation and can be left open if not used. The voltage level at the PIO pins is related to the V_IO supply voltage.

5.1 UART

The UART interface supports configurable baud rates. Hardware flow control is not supported. UART specifications are described in Table 18.

Symbol	Parameter	Min	Max	Unit
R_u	Baud rate	9600	921600	bit/s
Δ_{Tx}	Tx baud rate accuracy	-1%	+1%	-
Δ_{Rx}	Rx baud rate tolerance	-2.5%	+2.5%	-

Table 18: UART specifications

5.2 Default interface settings

Interface	Settings
UART	• 9600 baud, 8 bits, no parity bit, 1 stop bit. • Input messages: NMEA, UBX and RTCM. • Output messages: NMEA GGA, GLL, GSA, GSV[32], RMC, VTG and TXT

Table 19: Default interface settings

[32] In the default configuration, the NMEA-GSV messages are sent at 5-second intervals to avoid overflow in the TX buffer.

6 Mechanical specifications

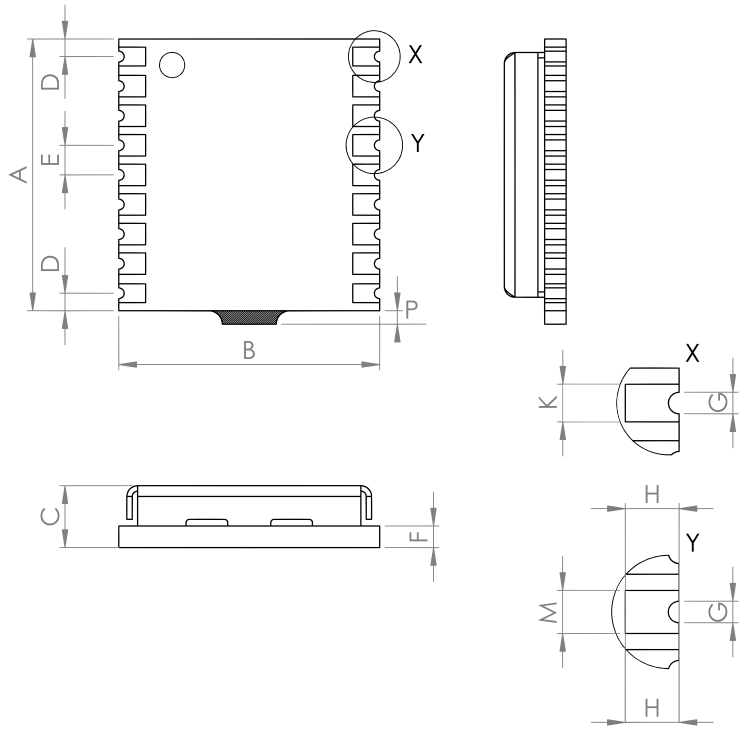

Figure 3: MAX-M10N-00B mechanical drawing

Symbol	Min (mm)	Typical (mm)	Max (mm)
A	10.0	10.1	10.7
B	9.6	9.7	9.8
C	2.2	2.5	2.7
D	0.55	0.65	0.95
E	1.0	1.1	1.2
F	-	0.76	-
G	0.3	0.4	0.5
H	0.9	1.0	1.1
K	0.6	0.7	0.8
M	0.7	0.8	0.9
P	0.0	0.3	0.6
Weight		0.5 g	

Table 20: MAX-M10N-00B mechanical dimensions

☞ The mechanical picture of the de-paneling residual tab (P) is an approximate representation, shape and position may vary.

☞ Take the size of the de-paneling residual tabs into account when designing the component keepout area.

☞ The width (K) applies to all four corner pins.

☞ The pitch (E) applies to all pins.

7 Qualifications and approvals

Type	Description
Quality and reliability	
Product qualification	Qualified according to u-blox qualification policy, based on a subset of AEC-Q104
Manufacturing	Manufactured at IATF 16949 certified sites
Environmental	
RoHS compliance	Yes
Moisture sensitivity level (MSL)[33, 34]	4
Type approvals	
European RED certification (CE)	Declaration of Conformity (DoC) is available on the u-blox website.
UK conformity assessment (UKCA)	Yes

Table 21: Qualifications and approvals

33 For MSL standard see IPC/JEDEC J-STD-020 and J-STD-033 [5].

34 For more information regarding moisture sensitivity levels, labeling, storage, and drying, see the Product packaging reference guide [4].

8 Product handling

8.1 Packaging

The MAX-M10N-00B modules are delivered as hermetically sealed, reeled tapes to enable efficient production, production lot set-up and tear-down. For more information, see the Product packaging reference guide [4].

8.1.1 Reels

MAX-M10N-00B modules are deliverable in quantities of 500 pieces on a reel. They are shipped on reel type B1, as specified in the Product packaging reference guide [4].

8.1.2 Tapes

The feed direction into the pick and place pick-up is from the reel (located on the left of the figure) towards right, and the tape is fed to the right.

The dimensions of the tape are specified in Figure 4 (measurements in mm).

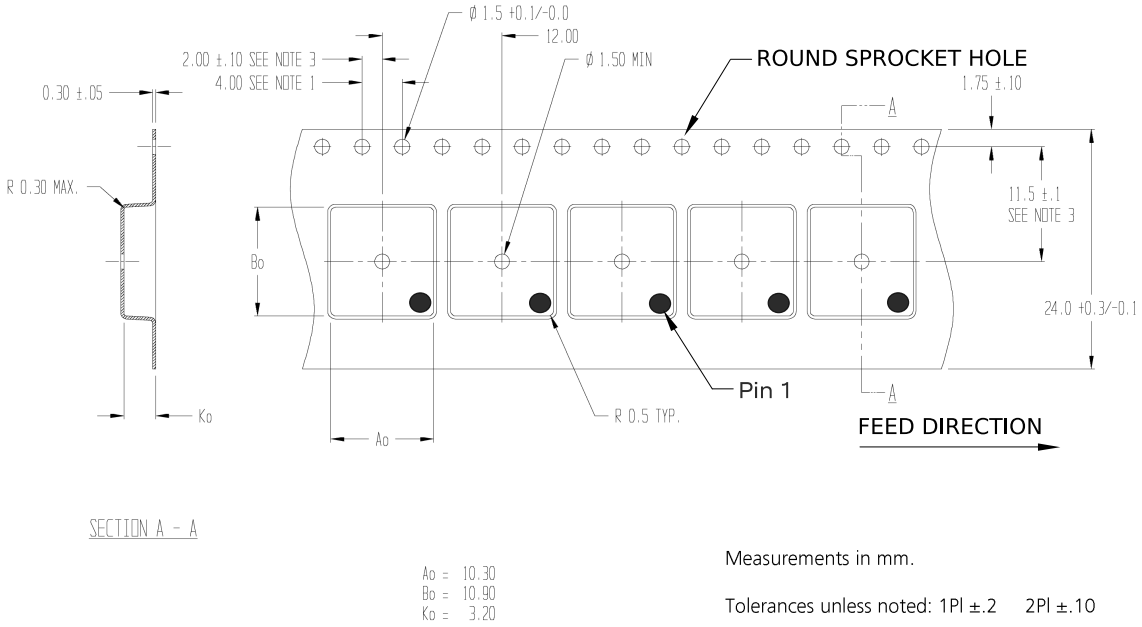

Notes:
1. 10 sprocket hole pitch cumulative tollerance ± 0.2
2. Pocket position relative to sprocket hole measured as true position of pocket, not pocket hole.
3 Ao and Bo are calculated on a plane at a distance "R" above the bottom of the pocket.

Figure 4: Tape specification

8.2 Soldering

Reflow soldering is described in the IPC/JEDEC J-STD-020 standard [5].

9 Product marking and ordering information

This section provides information about product marking and ordering.

9.1 Product marking

The product marking provides information on MAX-M10N-00B and its revision, as in Figure 5. For a description of the product marking, see Table 22

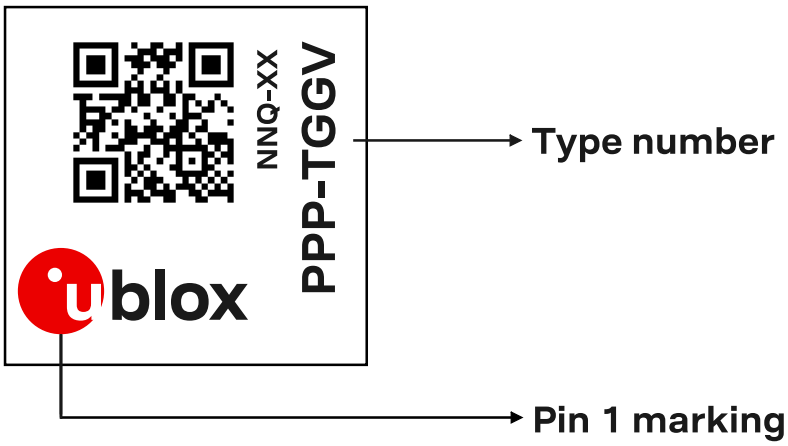

Figure 5: Example of MAX-M10N-00B product marking

Code	Meaning	Example
PPP	Form factor	MAX
TGG	Platform	M10 = u-blox M10
V	Variant	N = Standard precision, flash, TCXO, SAW filter, and LNA
NN	Major product version	00, 01, 02, ...
Q	Product grade	A = Automotive, B = Professional
XX	Revision	Hardware and firmware versions

Table 22: Description of product marking

9.2 Product identifiers

The MAX-M10N-00B marking features three product identifiers: product name, ordering code and type number. The product name identifies all u-blox products, independent of packaging and product grade, and it is used in documentation such as this data sheet. The ordering code includes the major product version and product grade, while the type number additionally includes the hardware and firmware versions.

Table 23 describes the three different product identifiers used in the MAX-M10N-00B module product marking.

Identifier	Format	Example
Product name	PPP-TGGV	MAX-M10N
Ordering code	PPP-TGGV-NNQ	MAX-M10N-00B
Type number	PPP-TGGV-NNQ-XX	MAX-M10N-00B-00

Table 23: Product identifiers

9.3 Ordering codes

Ordering code	Product	Remark
MAX-M10N-00B	u-blox M10 GNSS receiver module, professional grade	LNA-SAW RF front-end for the highest sensitivity in passive antenna designs

Table 24: Product ordering codes

u-blox provides information on product changes affecting the form factor, size or function of the product. For the Product change notifications (PCNs), see our website at: https://www.u-blox.com/en/product-resources.

Related documents

[1] MAX-M10N Integration manual, UBXDOC-304424225-19802
[2] u-blox M10 SPG 5.30 Interface description, UBXDOC-304424225-20395
[3] u-blox M10 SPG 5.30 Release note, UBXDOC-304424225-20393
[4] Product packaging reference guide, UBX-14001652
[5] Joint IPC/JEDEC standard, www.jedec.org

☞ For regular updates to u-blox documentation and to receive product change notifications please register on our homepage https://www.u-blox.com.

Revision history

Revision	Date	Status / comments
R01	09-Jan-2025	Initial release
R02	15-May-2025	Prototype Updated sections • Supported protocols • Firmware features • Block diagram • Default interface settings
R03	17-Sep-2025	Engineering sample Updated sections • Performance • Supported protocols • Firmware features • Indicative power requirements
R04	14-Oct-2025	Updated sections • Performance
R05	31-Oct-2025	Initial production Updated sections • Qualifications and approvals • Packaging: Tapes

Contact

u-blox AG

Address: Zürcherstrasse 68
8800 Thalwil
Switzerland

For further support and contact information, visit us at www.u-blox.com/support.

Looking for pricing, stock, or lifecycle information?

Click below to explore more details on WIN SOURCE:

- View MAX-M10N-00B on WIN SOURCE
- U-blox Information

Optimize Your Supply Chain with WIN SOURCE Solutions

- Global Sourcing Solution
- Obsolete Management
- Cost Control Management
- Shortage Management
- Alternative Solution
- Excess Inventory Management