32-bit Quad Integrated Communication Controller

TS68EN360

Features

- **CPU32+ Processor (4.5 MIPS at 25 MHz)**
  - **32-bit Version of the CPU32 Core (Fully Compatible with the CPU32)**
  - **Background Debug Mode**
  - **Byte-misaligned Addressing**
- **Up to 32-bit Data Bus (Dynamic Bus Sizing for 8 and 16 Bits)**
- **Up to 32 Address Lines (At Least 28 Always Available)**
- **Complete Static Design (0 - 25 MHz Operation)**
- **Slave Mode to Disable CPU32+ (Allows Use with External Processors)**
  - **Multiple QUICCs Can Share One System Bus (One Master)**
  - **TS68040 Companion Mode Allows QUICC to be a TS68040 Companion Chip and Intelligent Peripheral (22 MIPS at 25 MHz)**
  - **Peripheral Device of TSPC603e (see DC415/D note)**
- **Four General-purpose Timers**
  - **Superset of MC68302 Timers**
  - **Four 16-bit Timers or Two 32-bit Timers**
  - **Gate Mode Can Enable/Disable Counting**
- **Two Independent DMAs (IDMAs)**
- **System Integration Module (SIM60)**
- **Communications Processor Module (CPM)**
- **Four Baud Rate Generators**
- **Four SCCs (Ethernet/IEEE 802.3 Optional on SCC1-Full 10 Mbps Support)**
- **Two SMC**
- **V_{CC} = +5V ± 5%**
- **f_{max} = 25 MHz and 33 MHz**
- **Military Temperature Range: -55°C < T_C < +125°C**
- **P_D = 1.4 W at 25 MHz; 5.25V**
  2 W at 33 MHz; 5.25V

Description

The TS68EN360 QUad Integrated Communication Controller (QUICC™) is a versatile one-chip integrated microprocessor and peripheral combination that can be used in a variety of controller applications. It particularly excels in communications activities. The QUICC (pronounced “quick”) can be described as a next-generation TS68302 with higher performance in all areas of device operation, increased flexibility, major extensions in capability, and higher integration. The term “quad” comes from the fact that there are four serial communications controllers (SCCs) on the device; however, there are actually seven serial channels: four SCCs, two serial management controllers (SMCs), and one serial peripheral interface (SPI).

Screening/Quality

This product is manufactured in full compliance with:

- MIL-STD-883 (class B)
- QML (class Q)
- or according to Atmel standards

Rev. 2113A–HIREL–03/02

R suffix
PGA 241
Ceramic Pin Grid Array Cavity Up

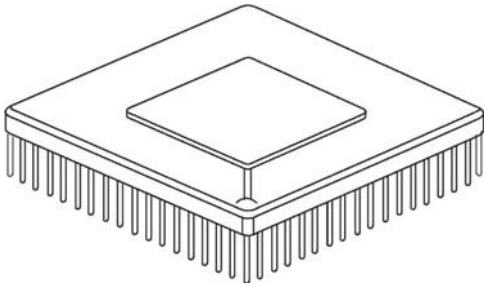

A suffix
CERQUAD 240
Ceramic Leaded Chip Carrier Cavity Down

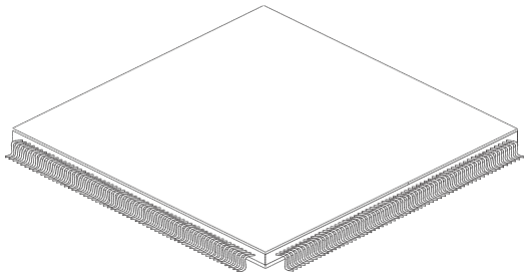

Introduction

QUICC Architecture Overview

The QUICC is 32-bit controller that is an extension of other members of the TS68300 family. Like other members of the TS68300 family, the QUICC incorporates the inter-module bus (IMB). The TS68302 is an exception, having an 68000 bus on chip. The IMB provides a common interface for all modules of the TS68300 family, which allows the development of new devices more quickly by using the library of existing modules. Although the IMB definition always included an option for an on-chip 32-bit bus, the QUICC is the first device to implement this option.

The QUICC is comprised of three modules: the CPU32+ core, the SIM60, and the CPM. Each module utilizes the 32-bit IMB.

The TS68EN360 QUICC block diagram is shown in Figure 1.

Figure 1. QUICC Block Diagram

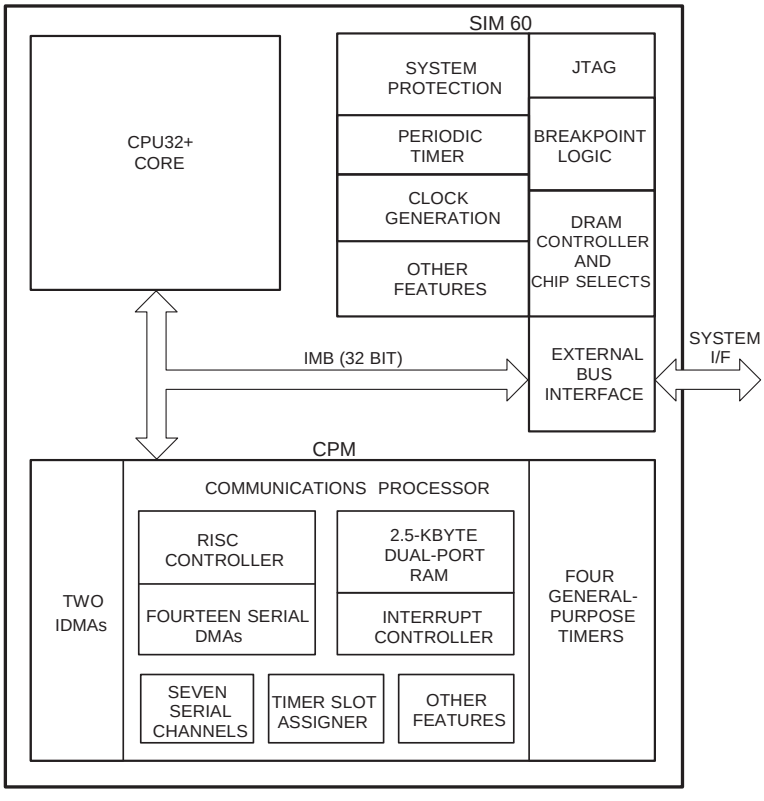

Pin Assignments

Figure 2. 241-lead Pin Grid Array (PGA)

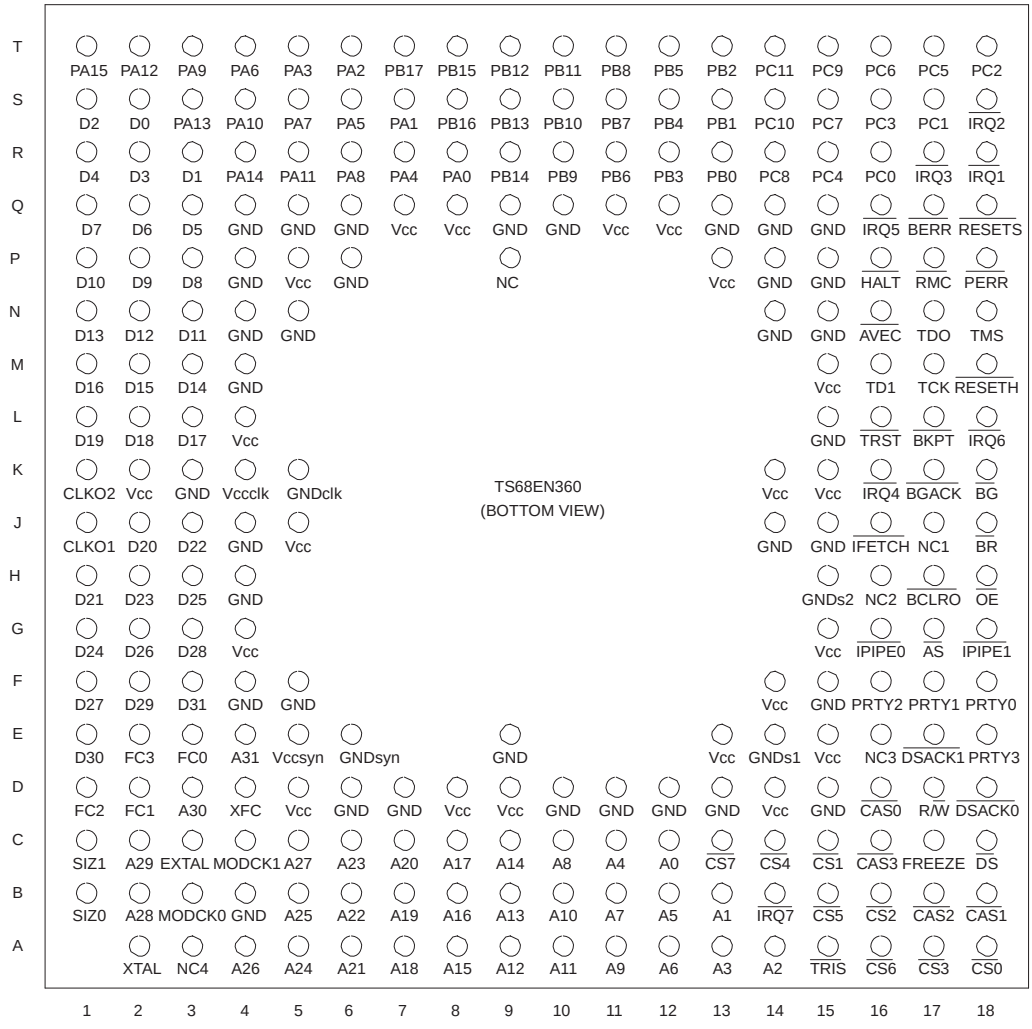

Note: Pin P9 “NC” is for guide purposes only.

Figure 3. 240-lead Cerquad

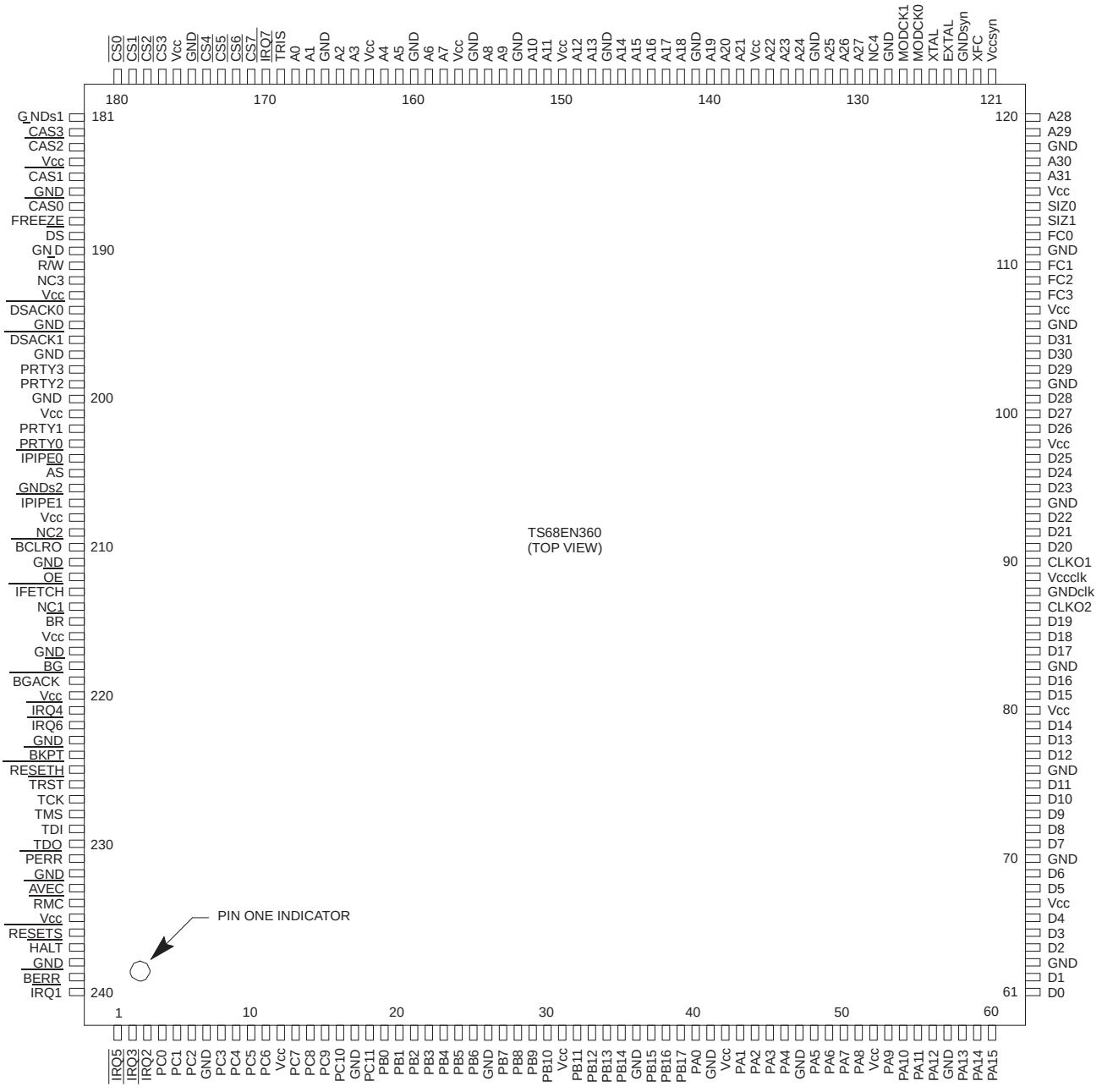

Signal Description

Functional Signal Group

Figure 4. QUICC Functional Signal Groups

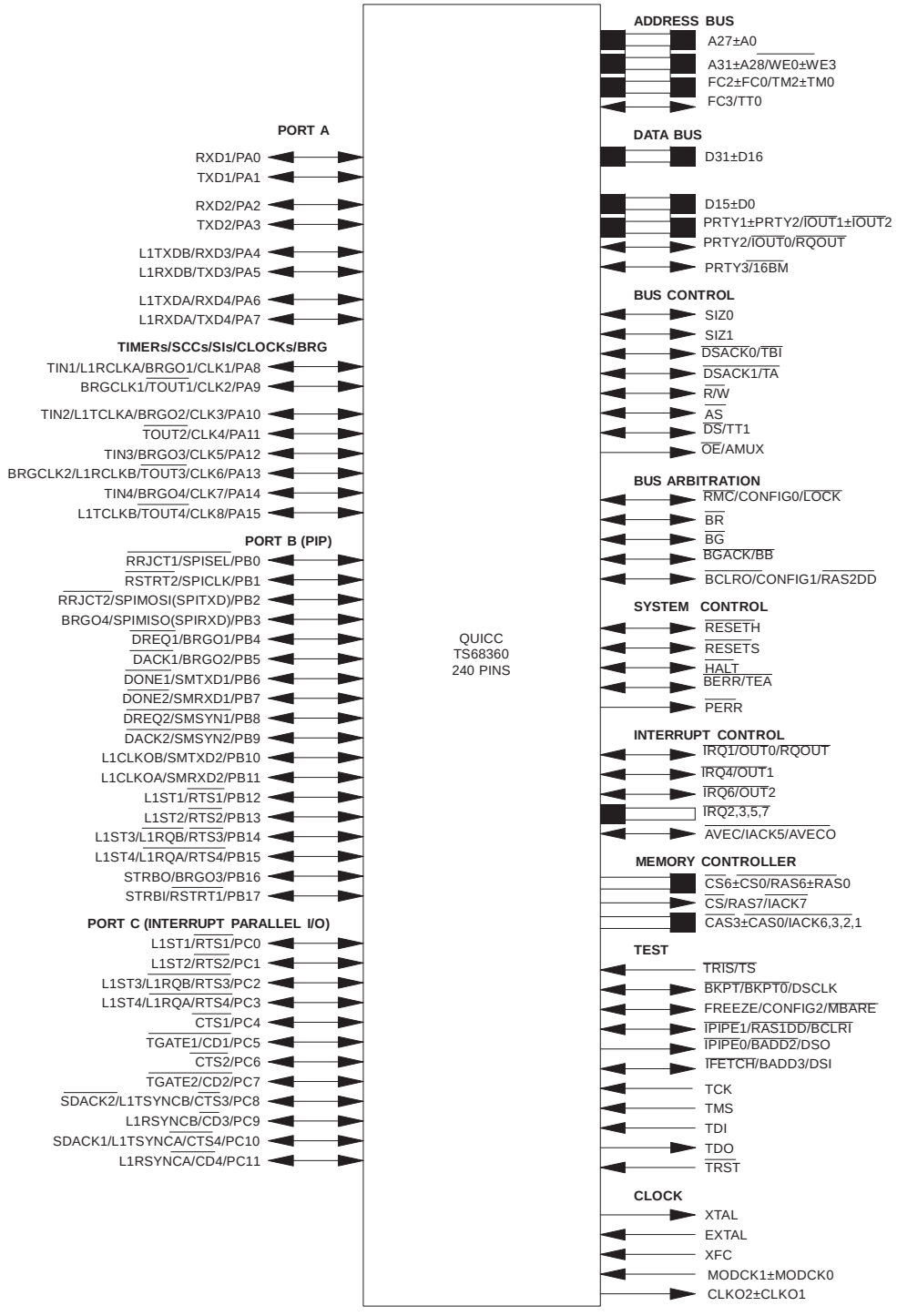

Signal Index

Table 1. System Bus Signal Index (Normal Operation)

Group	Signal Name	Mnemonic	Function
Address	Address Bus	A27-A0	Lower 27 bits of address bus. (I/O)
	Address Bus/Byte Write Enables	A31-A28 $\overline{WE3}$-$\overline{WE0}$	Upper four bits of address bus (I/O), or byte write enable signals (O) for accesses to external memory or peripherals.
	Function Codes	FC3-FC0	Identifies the processor state and the address space of the current bus cycle. (I/O)
Data	Data Bus 31 - 16	D31-D16	Upper 16-bit data bus used to transfer byte or word data. Used in 16-bit bus mode. (I/O)
	Data Bus 15 - 0	D15-D0	Lower 16-bit data bus used to transfer 3-byte or long-word data. (I/O) Not used in 16-bit bus mode.
Parity	Parity 2 - 0	PRTY2-PRTY0	Parity signals for byte writes/reads from/to external memory module. (I/O)
	Parity 3/$\overline{16BM}$	PRTY3/$\overline{16BM}$	Parity signals for byte writes/reads from/to external memory module or defines 16-bit bus mode. (I/O)
	Parity Error	$\overline{PERR}$	Indicates a parity error during a read cycle. (O)
Memory Controller	Chip Select Row Address Select 7 Interrupt Acknowledge 7	$\overline{CS}$ $\overline{RAS7}$ $\overline{IACK7}$	Enables peripherals or DRAMs at programmed addresses (O) or interrupt level 7 acknowledge line. (O)
	Chip Select 6-0 Row Address Select 6-0	$\overline{CS6}$-$\overline{CS0}$ $\overline{RAS6}$-$\overline{RAS0}$	Enables peripherals or DRAMs at programmed addresses. (O)
	Column Address Select 3 - 0/Interrupt Acknowledge 1, 2, 3, 6	$\overline{CAS3}$-$\overline{CAS0}$/ $\overline{IACK6}$,$\overline{3}$,$\overline{2}$,$\overline{1}$	DRAM column address select or interrupt level acknowledge lines. (O)
Bus Arbitration	Bus Request	$\overline{BR}$	Indicates that an external device requires bus mastership. (I)
	Bus Grant	$\overline{BG}$	Indicates that the current bus cycle is complete and the QUICC has relinquished the bus. (O)
	Bus Grand Acknowledge	$\overline{BGACK}$	Indicates that an external device has assumed bus mastership. (I)
	Read-Modify-Write Cycle Initial Configuration 0	$\overline{RMC}$ CONFIG0	Identifies the bus cycle as part of an indivisible read-modify-write operation (I/O) or initial QUICC configuration select. (I)
	Bus Clear Out/Initial Configuration 1/Row Address Select 2 Double-Drive	$\overline{BCLRO}$/CONFIG1/ $\overline{RAS2DD}$	Indicates that an internal device requires the external bus (Open-Drain O) or initial QUICC configuration select (I) or row address select 2 double-drive output. (O)

Table 1. System Bus Signal Index (Normal Operation) (Continued)

Group	Signal Name	Mnemonic	Function
Bus Control	Data and Size Acknowledge	$\overline{\text{DSACK1}}$ - $\overline{\text{DSACK0}}$	Provides asynchronous data transfer acknowledgement and dynamic bus sizing (open-drain I/O but driven high before three-stated).
	Address Strobe	$\overline{\text{AS}}$	Indicates that a valid address is on the address bus. (I/O)
	Data Strobe	$\overline{\text{DS}}$	During a read cycle, $\overline{\text{DS}}$ indicates that an external device should place valid data on the data bus. During a write cycle, $\overline{\text{DS}}$ indicates that valid data is on the data bus. (I/O)
	Size	SIZ1-SIZ0	Indicates the number of bytes remaining to be transferred for this cycle. (I/O)
	Read/Write	R/$\overline{\text{W}}$	Indicates the direction of data transfer on the bus. (I/O)
	Output Enable Address Multiplex	$\overline{\text{OE}}$/AMUX	Active during a read cycle indicates that an external device should place valid data on the data bus (O) or provides a strobe for external address multiplexing in DRAM accesses if internal multiplexing is not used. (O)
Interrupt Control	Interrupt Request Level 7-1	$\overline{\text{IRQ7}}$-$\overline{\text{IRQ1}}$	Provides external interrupt requests to the CPU32+ at priority levels 7-1. (I)
	Autovector/Interrupt Acknowledge 5	$\overline{\text{AVEC}}$/$\overline{\text{IACK5}}$	Autovector request during an interrupt acknowledge cycle (open-drain I/O) or interrupt level 5 acknowledge line. (O)
System Control	Soft Reset	$\overline{\text{RESETS}}$	Soft system reset. (open-drain I/O)
	Hard Reset	$\overline{\text{RESETH}}$	Hard system reset. (open-drain I/O)
	Halt	$\overline{\text{HALT}}$	Suspends external bus activity. (open-drain I/O)
	Bus Error	$\overline{\text{BERR}}$	Indicates an erroneous bus operation is being attempted. (open-drain I/O)
Clock and Test	System Clock Out 1	CLKO1	Internal system clock output 1. (O)
	System Clock Out 2	CLKO2	Internal system clock output 2 - normally 2x CLKO1. (O)
	Crystal Oscillator	EXTAL, XTAL	Connections for an external crystal to the internal oscillator circuit. EXTAL (I), XTAL (O).
	External Filter Capacitor	XFC	Connection pin for an external capacitor to filter the circuit of the PLL. (I)
	Clock Mode Select 1-0	MODCK1-MODCK0	Selects the source of the internal system clock. (I) THESE PINS SHOULD NOT BE SET TO 00
	Instruction Fetch/ Development Serial Input	$\overline{\text{IFETCH}}$/DSI	Indicates when the CPU32+ is performing an instruction word prefetch (O) or input to the CPU32+ background debug mode. (I)
	Instruction Pipe 0/ Development Serial Output	$\overline{\text{IPIPE0}}$/DSO	Used to track movement of words through the instruction pipeline (O) or output from the CPU32+ background debug mode. (O)
	Instruction Pipe 1/Row Address Select 1 Double-Drive	$\overline{\text{IPIPE1}}$/$\overline{\text{RAS1DD}}$	Used to track movement of words through the instruction pipeline (O), or a row address select 1 “double-drive” output (O).
	Breakpoint/Development Serial Clock	$\overline{\text{BKPT}}$/DSCLK	Signals a hardware breakpoint to the QUICC (open-drain I/O), or clock signal for CPU32+ background debug mode (I).
	Freeze/Initial Configuration 2	FREEZE/CONFIG2	Indicates that the CPU32+ has acknowledged a breakpoint (O), or initial QUICC configuration select (I).

Table 1. System Bus Signal Index (Normal Operation) (Continued)

Group	Signal Name	Mnemonic	Function
Clock and Test (Cont'd)	Three-State	$\overline{\text{TRIS}}$	Used to three-state all pins if QUICC is configured as a master. Always Sampled except during system reset. (I)
	Test Clock	TCK	Provides a clock for Scan test logic. (I)
	Test Mode Select	TMS	Controls test mode operations. (I)
	Test Data In	TDI	Serial test instructions and test data signal. (I)
	Test Data Out	TDO	Serial test instructions and test data signal. (O)
	Test Reset	$\overline{\text{TRST}}$	Provides an asynchronous reset to the test controller. (I)
Power	Clock Synthesizer Power	VCCSYN	Power supply to the PLL of the clock synthesizer.
	Clock Synthesizer Ground	GNDSYN	Ground supply to the PLL of the clock synthesizer.
	Clock Out Power	VCCCLK	Power supply to clock out pins.
	Clock Out Ground	GNDCLK	Ground supply to clock out pins.
	Special Ground 1	GNDS1	Special ground for fast AC timing on certain system bus signals.
	Special Ground 2	GNDS2	Special ground for fast AC timing on certain system bus signals.
	System Power Supply and Return	VCC, GND	Power supply and return to the QUICC.
--	No Connect	NC4-NC1	Four no-connect pins.

Note: 1. I denotes input, O denotes output and I/O is input/output.

Table 2. Peripherals Signal Index

Group	Signal Name	Mnemonic	Function
SCC	Receive Data	RXD4-RXD1	Serial receive data input to the SCCs. (I)
	Transmit Data	TXD4-TXD1	Serial transmit data output from the SCCs. (O)
	Request to Send	~~RTS4-RTS1~~	Request to send outputs indicate that the SCC is ready to transmit data. (O)
	Clear to Send	~~CTS4-CTS1~~	Clear to send inputs indicate to the SCC that data transmission may begin. (I)
	Carrier Detect	~~CD4-CD1~~	Carrier detect inputs indicate that the SCC should begin reception of data. (I)
	Receive Start	~~RSTRT1~~	This output from SCC1 identifies the start of a receive frame. Can be used by an Ethernet CAM to perform address matching. (O)
	Receive Reject	RRJCT1	This input to SCC1 allows a CAM to reject the current Ethernet frame after it determines the frame address did not match. (I)
	Clocks	CLK8-CLK1	Input clocks to the SCCs, SCMs, SI, and the baud rate generators. (I)
IDMA	DMA Request	~~DREQ2-DREQ1~~	A request (input) to an IDMA channel to start an IDMA transfer. (I)
	DMA Acknowledge	~~DACK2-DACK1~~	An acknowledgement (output) by the IDMA that an IDMA transfer is in progress. (O)
	DMA Done	~~DONE2-DONE1~~	A bidirectional signal that indicates the last IDMA transfer in a block of data. (I/O)
TIMER	Timer Gate	~~TGATE2-TGATE1~~	An input to a timer that enables/disables the counting function. (I)
	Timer Input	TIN4-TIN1	Time reference input to the timer that allows it to function as a counter. (I)
	Timer Output	~~TOUT4-TOUT1~~	Output waveform (pulse or toggle) from the timer as a result of a reference value being reached. (O)
SPI	SPI Master In Slave Out	SPIMISO	Serial data input to the SPI master (I); serial data output from an SPI slave. (O)
	SPI Master Out Slave In	SPIMOSI	Serial data output from the SPI master (O); serial data input to an SPI slave. (I)
	SPI Clock	SPICLK	Output clock from the SPI master (O); input clock to the SPI slave. (I)
	SPI Select	~~SPISEL~~	SPI slave select input. (I)
SMC	SMC Receive Data	SMRXD2-SMRXD1	Serial data input to the SMCs. (I)
	SMC Transmit Data	SMTXD2-SMTXD1	Serial data output from the SMCs. (O)
	SMC Sync	~~SMSYN2-SMSYN1~~	SMC synchronization signal. (I)

Table 2. Peripherals Signal Index (Continued)

Group	Signal Name	Mnemonic	Function
SI	SI Receive Data	L1RXDA, L1RXDB	Serial input to the time division multiplexed (TDM) channel A or channel B.
	SI Transmit Data	L1TXDA, L1TXDB	Serial output from the TDM channel A or channel B.
	SI Receive Clock	L1RCLKA, L1RCLKB	Input receive clock to TDM channel A or channel B.
	SI Transmit Clock	L1TCLKA, L1TCLKB	Input transmit clock to TDM channel A or channel B.
	SI Transmit Sync Signals	L1TSYNCA, L1TSYNCB	Input transmit data sync signal to TDM channel A or channel B.
	SI Receive Sync Signals	L1RSYNCA, L1RSYNCB	Input receive data sync signal to TDM channel A or channel B.
	IDL Interface Request	L1RQA, L1RQB	IDL interface request to transmit on the D channel. Output from the SI.
	SI Output Clock	L1CLKOA, L1CLKOB	Output serial data rate clock. Can output a data rate clock when the input clock is 2x the data rate.
	SI Data Strobes	L1ST4-L1ST1	Serial data strobe outputs can be used to gate clocks to external devices that do not have a built-in time slot assigner (TSA).
BRG	Baud Rate Generator Out 4-1	BRGO4-BRGO1	Baud rate generator output clock allows baud rate generator to be used externally.
	BRG Input Clock	CLK2, CLK6	Baud rate generator input clock from which BRG will derive the baud rates.
PIP	Port B 15-0	PB15-BP0	PIP Data I/O Pins.
	Strobe Out	STRBO	This input causes the PIP output data to be placed on the PIP data pins.
	Strobe In	STRBI	This input causes data on the PIP data pins to be latched by the PIP as input data.
SDMA	SDMA Acknowledge 2-1	$\overline{\text{SDACK2}}$-$\overline{\text{SDACK1}}$	SDMA output signals used in RISC receiver to mark fields in the Ethernet receive frame.

Scope

This drawing describes the specific requirements for the microcontroller TS68EN360 - 25 MHz and 33 MHz in compliance with MIL-STD-883 class B or Atmel standard screening.

Applicable Documents

MIL-STD-883

1. MIL-STD-883: test methods and procedures for electronics.
2. MIL-PRF-38535: general specifications for microcircuits.
3. DESC 5962-SMD-97607

Requirements

General

This microcircuits are in accordance with the applicable document and as specified herein.

Design and Construction

Terminal Connections

Depending on the package, the terminal connections shall be as shown in Figure 2 and Figure 3.

Lead Material and Finish

Lead material and finish shall be as specified in MIL-STD-883 (see enclosed “Ordering Information” on page 79).

Package

The macrocircuits are packaged in hermetically sealed ceramic packages which are conform to case outlines of MIL-STD-1835 or as follow:

- PGA but see “241-pin – PGA” on page 77
- CERQUAD

The precise case outlines are described at the end of the specification (“Package Mechanical Data” on page 77) and into MIL-STD-1835.

Electrical Characteristics

Table 3. Absolute Maximum Ratings

Rating	Symbol	Value	Unit
Supply Voltage(1)(2)	V_{CC}	-0.3 to +6.5	V
Input Voltage(1)(2)	V_{IN}	-0.3 to +6.5	V
Storage Temperature Range	T_{STG}	-55 to +150	°C

Note: This device contains protective circuitry against damage due to high static voltages or electrical fields; however, it is advised that normal precautions be taken to avoid application of any voltages higher than maximum-rated voltages to this high-impedance circuit. Reliability of operation is enhanced if unused inputs are tied to an appropriate logic voltage level (e.g., either GND or V_{DD}).

Notes:
1. Permanent damage can occur if maximum ratings are exceeded. Exposure to voltages or currents in excess of recommended values affects device reliability. Device modules may not operate normally while being exposed to electrical extremes.
2. Although sections of the device contain circuitry to protect against damage from high static voltages or electrical fields, take normal precautions to avoid exposure to voltages higher than maximum-rated voltages.
3. The supply voltage V_{CC} must start and restart from 0.0V; otherwise, the 360 will not come out of reset properly. Unless otherwise stated, all voltages are referenced to the reference terminal.

Table 4. Recommended Conditions Of Use
Unless otherwise stated, all voltages are referenced to the reference terminal.

Symbol	Parameter		Min.	Typ.	Max.	Unit
V_{CC}	Supply Voltage Range		+4.75		+5.25	V
V_{IL}	Logic Low Level Input Voltage Range		GND		+0.8	V
V_{IH}	Logic High Level Input Voltage Range		+2.0		V_{CC}	V
T_{case}	Operating Temperature		-55		+125	°C
V_{OH}	High Level Output Voltage		+2.4			V
f_{sys}	System Frequency	(For 25 MHz version)		25		MHz
		(For 33 MHz version)		33		MHz

Table 5. Thermal Characteristics

Symbol	Parameter		Value	Unit
θ_{JC}	Thermal Resistance - Junction to Case	240-pin Cerquad	2	°C/W
		241-pin PGA	7	
θ_{JA}	Thermal Resistance - Junction to Ambient	240-pin Cerquad	27.4	°C/W
		241-pin PGA	22.8	

$T_J = T_A + (P_D \cdot \theta_{JA})$

$P_D = (V_{DD} \cdot I_{DD}) + P_{I/O}$

Where $P_{I/O}$ is the power dissipation on pins.

Power Considerations

The average chip-junction temperature, T_J, in °C can be obtained from:

$$T_J = T_A \div (P_D \cdot \Theta_{JA}) \quad (1)$$

where:

T_A = Ambient Temperature, °C

Θ_{JA} = Package Thermal Resistance, Junction-to-Ambient, C/W

$P_D = P_{INT} + P_{I/O}$

$P_{INT} = I_{CC} \cdot V_{CC}$, Watts-chip Internal Power

$P_{I/O}$ = Power Dissipation on Input and Output Pins-User Determined

For most applications, $P_{I/O} < 0.3 \cdot P_{INT}$ and can be neglected.

An approximate relationship between P_D and T_J (if $P_{I/O}$ is neglected) is:

$$P_D = K \div (T_J + 273°C) \quad (2)$$

Solving Equations (1) and (2) for K gives:

$$K = P_D \cdot (T_A + 273°C) + \Theta_{JA} \cdot P_D^2 \quad (3)$$

where K is a constant pertaining to the particular part. K can be determined from Equation (3) by measuring P_D (at thermal equilibrium) for a know T_A. Using this value of K, the values of P_D and T_J can be obtained by solving Equations (1) and (2) iteratively for any value of T_A.

Mechanical and Environment

The microcircuits shall meet all mechanical environmental requirements of either MIL-STD-883 for class B devices or for Atmel standard screening.

Marking

The document where are defined the marking are identified in the related reference documents. Each microcircuit are legible and permanently marked with the following information as minimum:

- Atmel logo
- Manufacturer's part number
- Class B identification
- Date-code of inspection lot
- ESD identifier if available
- Country of manufacturing

Quality Conformance Inspection

DESC/MIL-STD-883

Is in accordance with MIL-M-38535 and method 5005 of MIL-STD-883. Group A and B inspections are performed on each production lot. Group C and D inspections are performed on a periodical basis.

Electrical Characteristics

General Requirements

All static and dynamic electrical characteristics specified for inspection purposes and the relevant measurement conditions are given below:

- Static electrical characteristics for the electrical variants
- Dynamic electrical characteristics for TS68EN360
  (25 MHz, 33 MHz)

For static characteristics, test methods refer to IEC 748-2 method number, where existing.

For dynamic characteristics, test methods refer to clause "Static Characteristics" on page 14 of this specification.

Static Characteristics

GND = 0 V_{dc}, T_C = -55 to +125°C. The electrical specifications in this document are preliminary. (See numbered notes).

Characteristic	Symbol	Min.	Max.	Unit
Input High Voltage (except EXTAL)	V_{IH}	2.0	V_{CC}	V
Input Low Voltage (5V Part)	V_{IL}	GND	0.8	V
Input Low Voltage (Part Only; PA8-15, PB1, PC5, PC7, TCK)	V_{IL}	GND	0.5	V
Input Low Voltage (Part Only; All Other Pins)	V_{IL}	GND	0.8	V
EXTAL Input High Voltage	V_{IHC}	0.8*(V_{CC})	V_{CC} + 0.3	V
Undershoot	-	-	-0.8	V
Input Leakage Current (All Input Only Pins except for TMS, TDI and TRST) Vin = 0/5V	Iin	-2.5	2.5	∝A
Hi-Z (Off-State) Leakage Current (All Noncrystal Outputs and I/O Pins except TMS,TDI and TRST) Vin = 0/5V	I_{OZ}	-2.5	-2.5	∝A
Signal Low Input Current V_{IL} = 0.8V (TMS, TDI and TRST Pins Only) Signal High Input Current V_{IH} = 2.0V (TMS, TDI and TRST Pins Only)	I_L I_H	-0.5 -0.5	0.5 0.5	mA mA
Output High Voltage I_{OH} = -0.8 mA, V_{CC} = 4.75V AII Noncrystal Outputs Except Open Drain Pins	V_{OH}	2.4	-	V
Output Low Voltage I_{OL} = 2.0 mA, CLKO1-2, FREEZE, $\overline{IPIPE0-1}$, $\overline{IFETCH}$, $\overline{BKPTO}$ I_{OL} = 3.2 mA, A31-A0, D31-D0, FC3-0, SIZ0-1, PA0, 2, 4, 6, 8-15, PB0-5, PB8-17, PC0-11, TDO, $\overline{PERR}$, PRTY0-3, $\overline{IOUT0-2}$, $\overline{AVECO}$, $\overline{AS}$, $\overline{CAS3-0}$, $\overline{BLCRO}$, $\overline{RAS0-7}$ I_{OL} = 5.3 mA, $\overline{DSACK0-1}$, R/$\overline{W}$, $\overline{DS}$, $\overline{OE}$, $\overline{RMC}$, $\overline{BG}$, $\overline{BGACK}$, $\overline{BERR}$ I_{OL} = 7 mA, TXD1-4 I_{OL} = 8.9 mA, PB6, PB7, $\overline{HALT}$, $\overline{RESET}$, $\overline{BR}$ (Output)	V_{OL}	-	0.5 0.5 0.5 0.5 0.5	V
Input Capacitance AII I/O Pins	Cin	-	20	pF
Load Capacitance (except CLKO1-2)	C_L	-	100	pF
Load Capacitance (CLKO1-2)	C_Lc		50	pF
Power	V_{CC}	4.75	5.25	V

Dynamic Characteristics

The AC specifications presented consist of output delays, input setup and hold times, and signal skew times. All signals are specified relative to an appropriate edge of the clock and possibly to one or more other signals.

The measurement of the AC specifications is defined by the waveforms shown in Figure 5. To test the parameters guaranteed by Atmel inputs must be driven to the voltage levels specified in the figure. Outputs are specified with minimum and/or maximum limits, as appropriate, and are measured as shown. Inputs are specified with minimum setup and hold times and are measured as shown. Finally, the measurement for signal-to-signal specifications are shown.

Note that the testing levels used to verify conformance to the AC specifications do not affect the guaranteed DC operation of the device as specified in the DC electrical characteristics.

Figure 5. Drive Levels and Test Points For AC Specifications

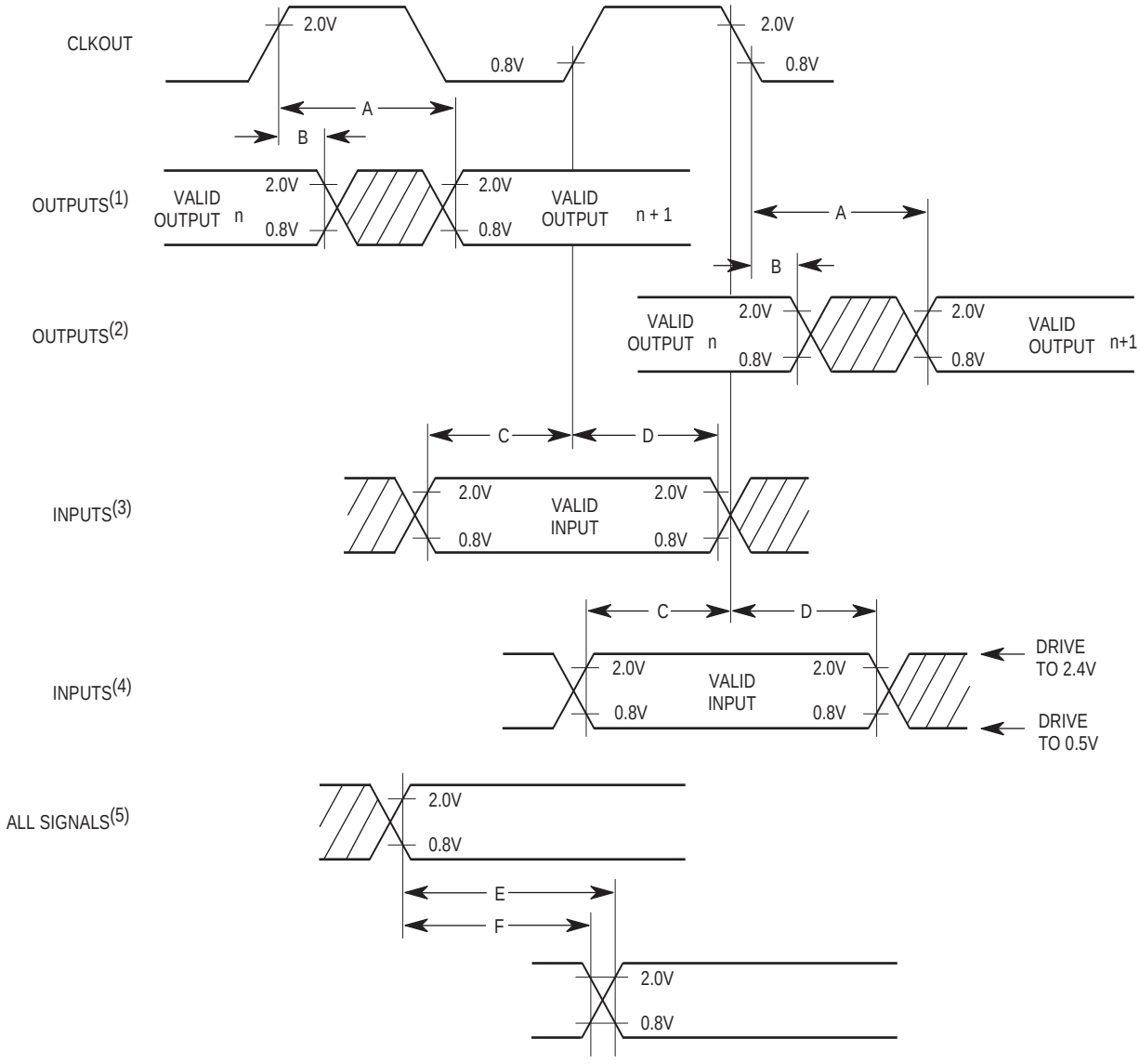

Notes:
1. This output timing is applicable to all parameters specified relative to the rising edge of the clock.
2. This output timing is applicable to all parameters specified relative to the falling edge of the clock.
3. This input timing is applicable to all parameters specified relative to the rising edge of the clock.
4. This input timing is applicable to all parameters specified relative to the falling edge of the clock.
5. This timing is applicable to all parameters specified relative to the assertion/negation of another signal.

Legend:

a) Maximum output delay specification.

b) Minimum output hold time.

c) Minimum input setup time specification.

d) Minimum input hold time specification.

e) Signal valid to signal valid specification (maximum or minimum).

f) Signal valid to signal invalid specification (maximum or minimum).

AC Power Dissipation

Table 6. Typical Current Drain

Mode of Operation	Symbol	System Clock Frequency	BRGCLK Clock Frequency	SyncCLK Clock Frequency	Typ	Unit
Normal mode (Rev A[1] and Rev B[2])	I_{DD}	25 MHz	25 MHz	25 MHz	250	mA
Normal Mode (Rev C[3] and Newer)	I_{DD}	25 MHz	25 MHz	25 MHz	237	mA
Normal Mode	I_{DD}	33 MHz	33 MHz	33 MHz	327	mA
Low Power Mode	I_{DDSB}	Divide by 2 12.5 MHz	Divide by 16 1.56 MHz	Divide by 2 12.5 MHz	150	mA
Low Power Mode	I_{DDSB}	Divide by 4 6.25 MHz	Divide by 16 1.56 MHz	Divide by 4 6.25 MHz	85	mA
Low Power Mode	I_{DDSB}	Divide by 16 1.56 MHz	Divide by 16 1.56 MHz	Divide by 4 6.25 MHz	35	mA
Low Power Mode	I_{DDSB}	Divide by 256 97.6 kHz	Divide by 16 1.56 MHz	Divide by 4 6.25 MHz	20	mA
Low Power Mode	I_{DDSB}	Divide by 256 97.6 kHz	Divide by 64 390 kHz	Divide by 64 390 kHz	13	mA
Low Power Stop VCO Off[4]	I_{DDSP}				0.5	mA
PLL Supply Current PLL Disabled PLL Enabled	 I_{DDPD} I_{DDPE}				 TBD TBD	

Notes: 1. Rev A mask is C63T
2. Rev B masks are C69T and F35G
3. Current Rev C masks are E63C, E68C and F15W
4. EXTAL frequency is 32 kHz

All measurements were taken with only CLKO1 enabled, V_{CC} = 5.0V, V_{IL} = 0V and V_{IH} = V_{CC}

Table 7. Maximum Power Dissipation

System Frequency	V_{CC}	Max P_D	Unit	Mask
25 MHz	5.25V	1.80	W	REV A[1] and REV B[2]
25 MHz	5.25V	1.45	W	REV C[3] and Newer
25 MHz	3.6V	0.65	W	REV C[3] and Newer
33 MHz	5.25V	2.00	W	REV C[3] and Newer

Notes: 1. Rev A mask is C63T
2. Rev B masks are C69T and F35G
3. Current Rev C masks are E63C, E68C and F15W

AC Electrical Specifications Control Timing

GND = 0 Vdc, T_C = -55 to +125°C. The electrical specifications in this document are preliminary (See Figure 6).

Number	Characteristic	Symbol	25 MHz		33.34 MHz		Unit
			Min	Max	Min	Max	
	System Frequency	f_{sys}	dc[1]	25.00		33.34	MHz
	Crystal Frequency	f_{XTAL}	25	6000	25	6000	kHz
	On-Chip VCO System Frequency	f_{sys}	20	50	20	67	MHz
	Start-up Time With external clock (oscillator disabled) or after changing the multiplication factor MF	t_{pll}		2500			clks
	CLKO1-2 stability	$\square_{CLK}$	TBD	TBD			%
1	CLKO1 Period	t_{cyc}	40	-	30	-	ns
1A	EXTAL Duty Cycle, MF	t_{dcyc}	40	60	40	60	%
1C	External Clock Input Period	t_{EXTcyc}	40	-	30	-	ns
2, 3	CLKO1 Pulse Width (Measured at 1.5V)	t_{CW1}	19	-	14	-	ns
2A, 3A	CLKO2 Pulse Width (Measured at 1.5V)	t_{CW2}	9.5	-	7	-	ns
4, 5	CLKO1 Rise and Fall Times (Full drive)	t_{Crf1}	-	2	-	2	ns
4A, 5A	CLKO2 Rise and Fall Times (Full drive)	t_{Crf2}	-	2	-	1.6	ns
5B	EXTAL to CLKO1 Skew-PLL enabled (MF< 5)	t_{EXTP1}		a		a	ns
5C	EXTAL to CLKO2 Skew-PLL enabled (MF< 5)	t_{EXTP2}		a		a	ns
5D	CLKO1 to CLKO2 Skew	$Atmel_{KW}$		a		a	ns

Note: 1. Note that the minimum VCO frequency and the PLL default values put some restrictions on the minimum system frequency.

The following calculation should be used to determine the actual value for specifications 5B, 5C and 5D.

5B: 25 MHz ±(0.9 ns + 0.25 x (rise time)) (1.4 ns @ rise = 2 ns; 1.9 ns @ rise = 4 ns)

33 MHz ±(0.5 ns + 0.25 x (rise time)) (1 ns @ rise = 2 ns; 1.5 ns @ rise = 4 ns)

5C: 25/33 MHz ±(2 ns + 0.25 x (rise time)) (2.5 ns @ rise = 2 ns; 3 ns @ rise = 4 ns)

5D: 25 MHz ±(3 ns + 0.5 x (rise time)) (4 ns @ rise = 2 ns; 5 ns @ rise = 4 ns)

33 MHz ±(2.5 ns + 0.5 x (rise time)) (3.5 ns @ rise = 2 ns; 4.5 ns @ rise = 4 ns)

Figure 6. Clock Timing

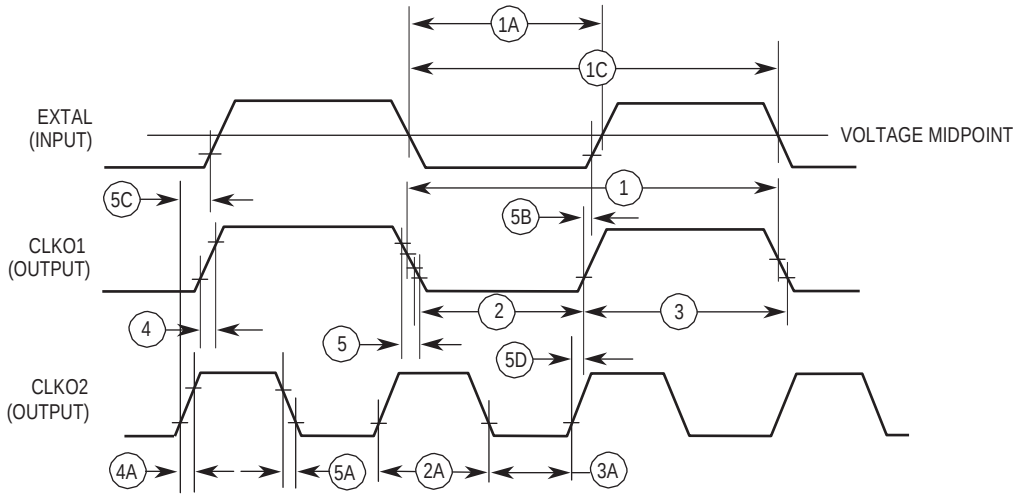

External Capacitor For PLL

GND = 0 Vdc, T_C = -55 to +125°C. The electrical specifications in this document are preliminary.

Characteristic	Symbol	Min	Max	Unit
PLL External Capacitor (XFC to VCCSYN)	C_{XFC}			
MF< 5 (Recommended value MF x 400 pF)(1)		MF x 340	MF x 480	pF
MF> 4 (Recommended value MF x 540 pF)(1)		MF x 380	MF x 970	pF

Note: 1. MF - multiplication factor.

Examples:

Notes: 1. MODCK1 pin = 0, MF = 1 ⇒ C_{XFC} = 400 pF

2. MODCK1 pin = 1, crystal is 32.768 kHz (or 4.192 MHz), initial MF = 401, initial frequency = 13.14 MHz, later on MF is changed to 762 to support a frequency of 25 MHz. Minimum C_{XFC} is: 762 x 380 = 289 nF, Maximum C_{XFC} is: 401 x 970 = 390 nF. The recommended C_{XFC} for 25 MHz is: 762 x 540 = 414 nF. 289 nF < C_{XFC} < 390 nF and closer to 414 nF. The proper available value for C_{XFC} is 390 nF.

3. MODCK1 pin = 1, crystal is 32.768 kHz (or 4.192 MHz), initial MF = 401, initial frequency = 13.14 MHz, later on MF is changed to 1017 to support a frequency of 33.34 MHz. Minimum C_{XFC} is: 1017 x 380 = 386 nF, Maximum C_{XFC} is: 401 x 970 = 390 nF ⇒ 386 nF < C_{XFC} < 390 nF. The proper available value for C_{XFC} is 390 nF.

4. In order to get higher range, higher crystal frequency can be used (i.e. 50 kHz), in this case:
Minimum C_{XFC} is: 667 x 380 = 253 nF, Maximum C_{XFC} is: 401 x 970 = 390 nF ⇒ 386 nF < C_{XFC} < 390 nF.

Bus Operation AC Timing Specifications

GND = 0 Vdc, T_C = -55 to +125°C. The electrical specifications in this document are preliminary (See Figure 7 to Figure 23).

Number	Characteristic	Symbol	25 MHz		33.34 MHz		Unit
			Min	Max	Min	Max	
6	CLKO1 High to Address, FC, SIZ, $\overline{RMC}$ Valid	t_{CHAV}	0	15	0	12	ns
6A	CLKO1 High to Address Valid (GAMX = 1)	t_{CHAV}	0	20	0	15	ns
7	CLKO1 High to Address, Data, FC, SIZ, $\overline{RMC}$ High Impedance	t_{CHAZx}	0	40	0	30	ns
8	CLKO1 High to Address, Data, FC, SIZ, $\overline{RMC}$ Invalid	t_{CHAZn}	-2	-	-2	-	ns
9	CLKO1 Low to $\overline{AS}$, $\overline{DS}$, $\overline{OE}$, $\overline{WE}$, $\overline{IFETCH}$, $\overline{IPIPE}$, $\overline{IACKx}$ Asserted	t_{CLSA}	3	20	3	15	ns
9(10)	CLKO1 Low to $\overline{CSx}$/$\overline{RASx}$ Asserted	t_{CLSA}	4	16	4	12	ns
9B(11)	CLKO1 High to $\overline{CSx}$/$\overline{RASx}$ Asserted	t_{CHCA}	4	16	4	12	ns
9A(2)(10)	$\overline{AS}$ to $\overline{DS}$ or $\overline{CSx}$/$\overline{RASx}$ or $\overline{OE}$ Asserted (Read)	t_{STSA}	-6	6	-5.625	5.625	ns
9C(2)(11)	$\overline{AS}$ to $\overline{CSx}$/$\overline{RASx}$ Asserted	t_{STCA}	14	26	9	21	ns
11(10)	Address, FC, SIZ, $\overline{RMC}$, valid to $\overline{AS}$, $\overline{CSx}$/$\overline{RASx}$, $\overline{OE}$, $\overline{WE}$, (and $\overline{DS}$ Read) Asserted	t_{AVSA}	10	-	8	-	ns
11A(11)	Address, FC, SIZ, $\overline{RMC}$, Valid to $\overline{CSx}$/$\overline{RASx}$ Asserted	t_{AVCA}	30	-	22.5	-	ns
12	CLKO1 Low to $\overline{AS}$, $\overline{DS}$, $\overline{OE}$, $\overline{WE}$, $\overline{IFETCH}$, $\overline{IPIPE}$, $\overline{IACKx}$ Negated	t_{CLSN}	3	20	3	15	ns
12(16)	CLKO1 Low to $\overline{CSx}$/$\overline{RASx}$ Negated	t_{CLSN}	4	16	4	12	ns
12A(13)(16)	CLKO1 High to $\overline{CSx}$/$\overline{RASx}$ Negated	t_{CHCN}	4	16	4	12	ns
12B	CS negate to WE negate (CSNTQ = 1)	$Atmel_{TW}$	15	-	12	-	ns
13(12)	$\overline{AS}$, $\overline{DS}$, $\overline{CSx}$, $\overline{OE}$, $\overline{WE}$, $\overline{IACKx}$ Negated to Address, FC, SIZ Invalid (Address Hold)	t_{SNAI}	10	-	7.5	-	ns
13A(13)	$\overline{CSx}$ Negated to Address, FC, SIZ, Invalid (Address Hold)	t_{CNAI}	30	-	22.5	-	ns
14(10)(12)	$\overline{AS}$, $\overline{CSx}$, $\overline{OE}$, $\overline{WE}$ (and $\overline{DS}$ Read) Width Asserted	t_{SWA}	75	-	56.25	-	ns
14C(11)(13)	$\overline{CSx}$ Width Asserted	t_{CWA}	35	-	26.25	-	ns
14A	$\overline{DS}$ Width Asserted (Write)	t_{SWAW}	35	-	26.25	-	ns
14B	$\overline{AS}$, $\overline{CSx}$, $\overline{OE}$, $\overline{WE}$, $\overline{IACKx}$, (and $\overline{DS}$ Read) Width Asserted (Fast Termination Cycle)	t_{SWDW}	35	-	26.25	-	ns
14D(13)	$\overline{CSx}$ Width Asserted (Fast Termination Cycle)	t_{CWDW}	15	-	10	-	ns
15(3)(10)(12)	$\overline{AS}$, $\overline{DS}$, $\overline{CSx}$, $\overline{OE}$, $\overline{WE}$ Width Negated	t_{SN}	35	-	26.25	-	ns
16	CLKO1 High to $\overline{AS}$, $\overline{DS}$, R/$\overline{W}$ High Impedance	t_{CHSZ}	-	40	-	30	ns
17(12)	$\overline{AS}$, $\overline{DS}$, $\overline{CSx}$, $\overline{WE}$ Negated to R/$\overline{W}$ High	t_{SNRN}	10	-	7.5	-	ns
17A(13)	$\overline{CSx}$ Negated to R/$\overline{W}$ High	t_{CNRN}	30	-	22.5	-	ns
18	CLKO1 High to R/$\overline{W}$ High	t_{CHRH}	0	20	0	15	ns

Bus Operation AC Timing Specifications (Continued)

GND = 0 Vdc, T_C = -55 to +125°C. The electrical specifications in this document are preliminary (See Figure 7 to Figure 23).

Number	Characteristic	Symbol	25 MHz		33.34 MHz		Unit
			Min	Max	Min	Max	
20	CLKO1 High to R/W Low	t_{CHRL}	3	20	3	15	ns
21[10]	R/W High to AS, CSx, OE Asserted	t_{RAAA}	10	-	7.5	-	ns
21A[11]	R/W High to CSx Asserted	t_{RACA}	30	-		-	ns
22	R/W Low to DS Asserted (Write)	t_{RASA}	47	-	36	-	ns
23	CLKO1 High to Data-Out	t_{CHDO}	-	23	-	18	ns
23A	CLKO1 High to Parity Valid	t_{CHPV}	-	25	-	20	ns
23B	Parity Valid to CAS Low	t_{PVCL}	3	-	3	-	ns
24[12]	Data-Out, Parity-Out Valid to Negating Edge of AS, CSx, WE, (Fast Termination Write)	t_{DVASN}	10	-	7.5	-	ns
25[12]	DS, CSX, WE Negated to Data-Out, Parity-Out Invalid (Data-Out, Parity-Out Hold)	t_{SNDOI}	10	-	7.5	-	ns
25A[13]	CSx Negated to Data-Out, Parity-Out Invalid (Data-Out, Parity-Out Hold)	t_{CNDOI}	35	-	25	-	ns
26	Data-Out, Parity-Out Valid to DS Asserted (Write)	t_{DVSA}	10	-	7.5	-	ns
27[15]	Data-In, Parity-In to CLKO1 Low (Data-Setup)	t_{DICL}	1	-	1	-	ns
27B[14]	Data-In, Parity-In Valid to CLKO1 Low (Data-Setup)	t_{DICL}	20	-	15	-	ns
27A	Late BERR, HALT, BKPT Asserted to CLKO1 Low (Setup Time)	t_{BELCL}	10	-	7.5	-	ns
28[18]	AS, DS Negated to DSACKx, BERR, HALT Negated	t_{SNDN}	0	50	0	37.5	ns
29[4]	DS, CSx, OE, Negated to Data-In Parity-In Invalid (Data-In, Parity-In Hold)	t_{SNDI}	0	-	0	-	ns
29A[4]	DS, CSx, OE Negated to Data-In High Impedance	t_{SHDI}	-	40	-	30	ns
30[4]	CLKO1 Low to Data-In, Parity-In Invalid (Fast Termination Hold)	t_{CLDI}	10	-	7.5	-	ns
30A[4]	CLKO1 Low to Data-In High Impedance	t_{CLDH}	-	60	-	45	ns
31[5][15]	DSACKx Asserted to Data-in, Parity-In Valid	t_{DADI}	-	32	-	24	ns
31A	DSACKx Asserted to DSACKx Valid (Skew)	t_{DADV}	-	10	-	7.5	ns
31B[5][14]	DSACKx Asserted to Data-in, Parity-In Valid	t_{DADI}	-	35	-	26	ns
32	HALT an RESET Input Transition Time	t_{HRrf}	-	140	-		ns
33	CLKO1 High to BG Asserted	t_{CLBA}	-	20	-	15	ns
34	CLKO1 High to BG Negated	t_{CLBN}	-	20	22.5	15	ns
35[6]	BR Asserted to BG Asserted (RMC Not Asserted)	t_{BRAGA}	1	-	1	-	CLKO1
37	BGACK Asserted to BG Negated	t_{GAGN}	1	2.5	1	2.5	CLKO1
39	BG Width Negated	t_{GH}	2	-	2	-	CLKO1
39A	BG Width Asserted	t_{GA}	1	-	1	-	CLKO1

Bus Operation AC Timing Specifications (Continued)

GND = 0 Vdc, T_C = -55 to +125°C. The electrical specifications in this document are preliminary (See Figure 7 to Figure 23).

Number	Characteristic	Symbol	25 MHz		33.34 MHz		Unit
			Min	Max	Min	Max	
46	R/W Width Asserted (Write or Read)	t_{RWA}	100	-	75	-	ns
46A	R/W Width Asserted (Fast Termination Write or Read)	t_{RWAS}	75	-	56	-	ns
47A	Asynchronous Input Setup Time	t_{AIST}	5	-	4	-	ns
47B	Asynchronous Input Hold Time	t_{AIHT}	10	-	7.5	-	ns
48(5)(7)	DSACKx Asserted to BERR, HALT Asserted	t_{DABA}	-	30	-	22.5	ns
53	Data-Out, Parity-Out Hold from CLKO1 High	t_{DOCH}	0	-	0	-	ns
54	CLKO1 High to Dat-Out, Parity-Out High Impedance	t_{CHDH}	-	20	-	15	ns
55	R/W Asserted to Data Bus Impedance Change	t_{RADC}	25	-	19	-	ns
56	RESET Pulse Width (Reset Instruction)	t_{HRPW}	512	-	512	-	CLKO1
56A	RESET Pulse Width (Input from External Device)	t_{RPWI}	20	-	20	-	CLKO1
57	BERR Negated to HALT Negated (Return)	t_{BNHN}	0	-	0	-	ns
58	CLKO1 High to BERR, RESETS, RESETH Driven Low	t_{CHBRL}	-	30		26	ns
58A	CLKO1 Low RESETS Driven Low (upon Reset Instruction execution only)	t_{CLRL}	-	30		26	ns
58B	CLKO1 High to BERR, RESETS, RESETH tri-stated	t_{CLRL}	-	20	-	15	ns
60	CLKO1 High to BCLRO Asserted	t_{CHBCA}	-	20	-	15	ns
61	CLKO1 High to BCLRO Negated	t_{CHBCN}	-	20	-	15	ns
62(9)	BR Synchronous Setup Time	t_{BRSU}	5	-	3.75	-	ns
63(9)	BR Synchronous Hold Time	t_{BRH}	10	-	7.5	-	ns
64(9)	BGACK Synchronous Setup Time	t_{BGSU}	5	-	3.75	-	ns
65(9)	BGACK Synchronous Hold Time	t_{BGH}	10	-	7.5	-	ns
66	BR Low to CLKO1 Rising Edge (040 comp. mode)	t_{BRCH}	5	-	5	-	ns
70	CLKO1 Low to Data Bus Driven (Show Cycle)	t_{SCLDD}	0	30	0	22.5	ns
71	Data Setup Time to CLKO1 Low (Show Cycle)	t_{SCLDS}	10	-	7.5	-	ns
72	Data Hold from CLKO1 Low (Show Cycle)	t_{SCLDH}	6	-	3.75	-	ns
73	BKPT Input Setup Time	t_{BKST}	10	-	7.5	-	ns
74	BKPT Input Hold Time	t_{BKHT}	6	-	3.75	-	ns
75	RESETH Low to Config2-0, MOD1-0, B16M Valid	t_{MST}	-	500	-	500	CLKO1
76	Config2-0	t_{MSH}	0	-	0	-	ns
77	MOD1-0 Hold Time, B16M Hold Time	t_{MSH}	10	-	10	-	CLKO1
80	DSI Input Setup Time	t_{DSISU}	10	-	7.5	-	ns

Bus Operation AC Timing Specifications (Continued)

GND = 0 Vdc, T_C = -55 to +125°C. The electrical specifications in this document are preliminary (See Figure 7 to Figure 23).

Number	Characteristic	Symbol	25 MHz		33.34 MHz		Unit
			Min	Max	Min	Max	
81	DSI Input Hold Time	t_{DSIH}	6	-	3.75	-	ns
82	DSCLC Setup Time	t_{DSCSU}	10	-	7.5	-	ns
83	DSCLC Hold Time	t_{DSCH}	6	-	3.75	-	ns
84	DSO Delay Time	t_{DSOD}	-	tcyc+20	-	tcyc+20	ns
85	DSCLK Cycle	t_{DSCCYC}	2	-	2	-	CLKO1
86	CLKO1 High to Freeze Asserted	t_{FRZA}	0	35	0	26.25	ns
87	CLKO1 High to Freeze Negated	t_{FRZN}	0	35	0	26.25	ns
88	CLKO1 High to $\overline{IFETCH}$ High Impedance	t_{IFZ}	0	35	0	26.25	ns
89	CLKO1 High to $\overline{IFETCH}$ Valid	t_{IF}	0	35	0	26.25	ns
90	CLKO1 High to $\overline{PERR}$ Asserted	t_{CHPA}	0	20	0	15	ns
91	CLKO1 High to $\overline{PERR}$ Negated	t_{CHPN}	0	20	0	15	ns
92	V_{CC} Ramp-Up Time At Power-On Reset	t_{RMIN}	5	-	5	-	ns

Notes:
1. All AC timing is shown with respect to 0.8V and 2.0V levels unless otherwise noted.
2. This number can be reduced to 5 ns if strobes have equal loads.
3. If multiple chip selects are used, the $\overline{CSx}$ width negated (#15) applies to the time from the negation of a heavily loaded chip select to the assertion of a lightly loaded chip select.
4. Hold times are specified with respect to $\overline{DS}$ or $\overline{CSx}$ on asynchronous reads and with respect to CLKO1 on fast termination reads. The user is free to use either hold time for fast termination reads.
5. If the asynchronous setup (#17) requirements are satisfied, the $\overline{DSACKx}$ low to data setup time (#31) and $\overline{DSACKx}$ low to $\overline{BERR}$ low setup time (#48) can be ignored. The data must only satisfy the data-in to CLKO1 low setup time (#27) for the following clock cycle: $\overline{BERR}$ must only satisfy the late $\overline{BERR}$ low to CLKO1 low setup time (#27A) for the following clock cycle.
6. To ensure coherency during every operand transfer, $\overline{BG}$ will not be asserted in response to $\overline{BR}$ until after cycles of the current operand transfer are complete and $\overline{RMC}$ is negated.
7. In the absence of $\overline{DSACKx}$, $\overline{BERR}$ is an asynchronous input using the asynchronous setup time (#47).
8. During interrupt acknowledge cycles, the processor may insert up to two wait states between states S0 and S1.
9. Specs are for Synchronous Arbitration only. ASTM = 1.
10. $\overline{CSx}$ specs are for TRLX = 0.
11. $\overline{CSx}$ specs are for TRLX = 1.
12. $\overline{CSx}$ specs are for CSNTQ = 0.
13. $\overline{CSx}$ specs are for CSNTQ = 1; or $\overline{RASx}$ specs for DRAM accesses.
14. Specs are read cycles with parity check and PBEE = 1.
15. Specs are read cycles with parity check and PBEE = 0, PAREN = 1.
16. $\overline{RASx}$ specs are for page miss case.
17. Specifications only apply to $\overline{CSx}$/$\overline{RASx}$ pins.
18. Specification applies to non fast termination cycles. In fast termination cycles, the $\overline{BERR}$ signal must be negated by 20 ns after negation of $\overline{AS}$, $\overline{DS}$.

Figure 7. Read Cycle

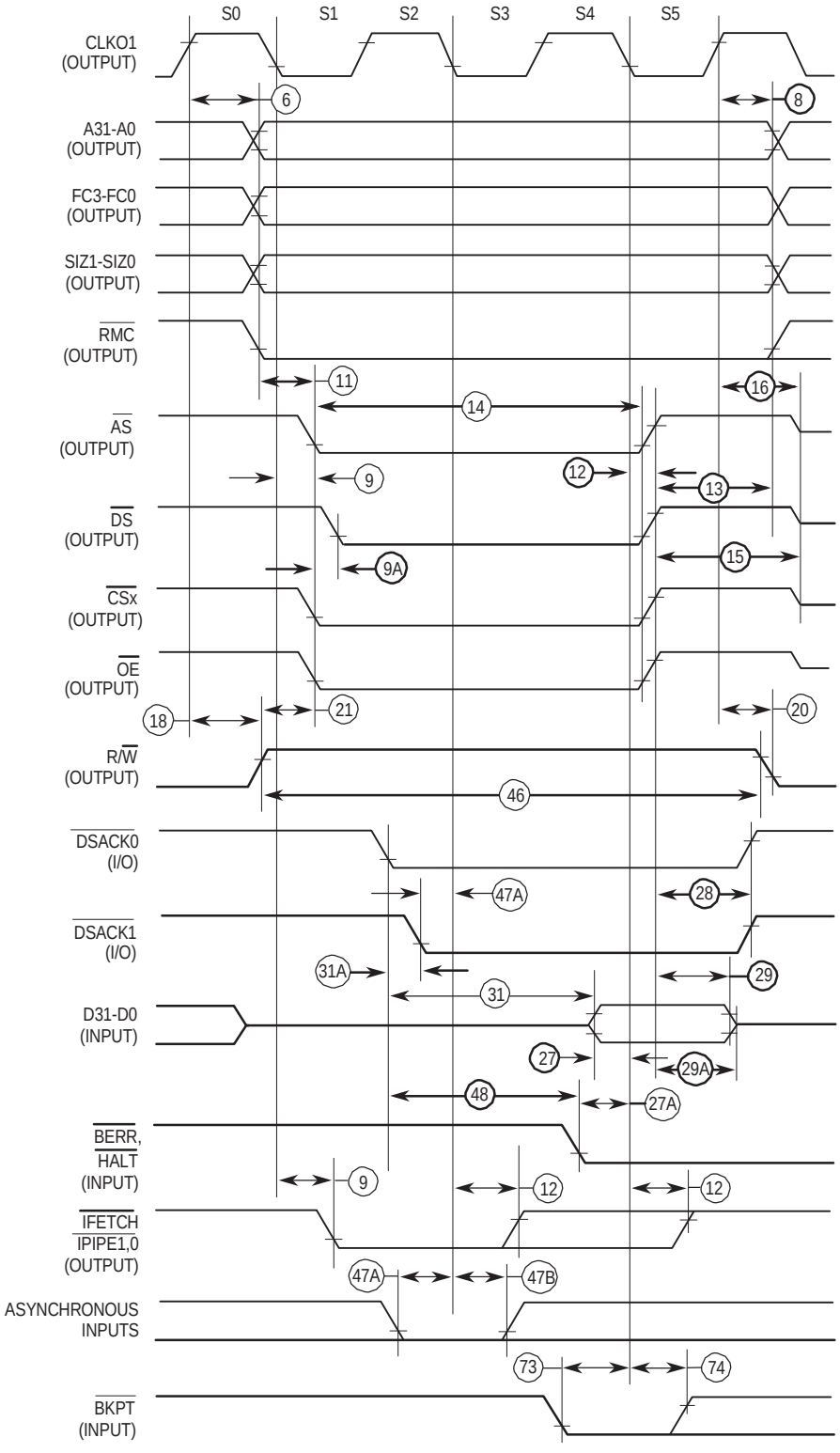

Note: All timing is shown with respect to 0.8V and 2.0V levels.

Figure 8. Fast Termination Read Cycle (Parity Check PAREN = 1, PBEE = 0)

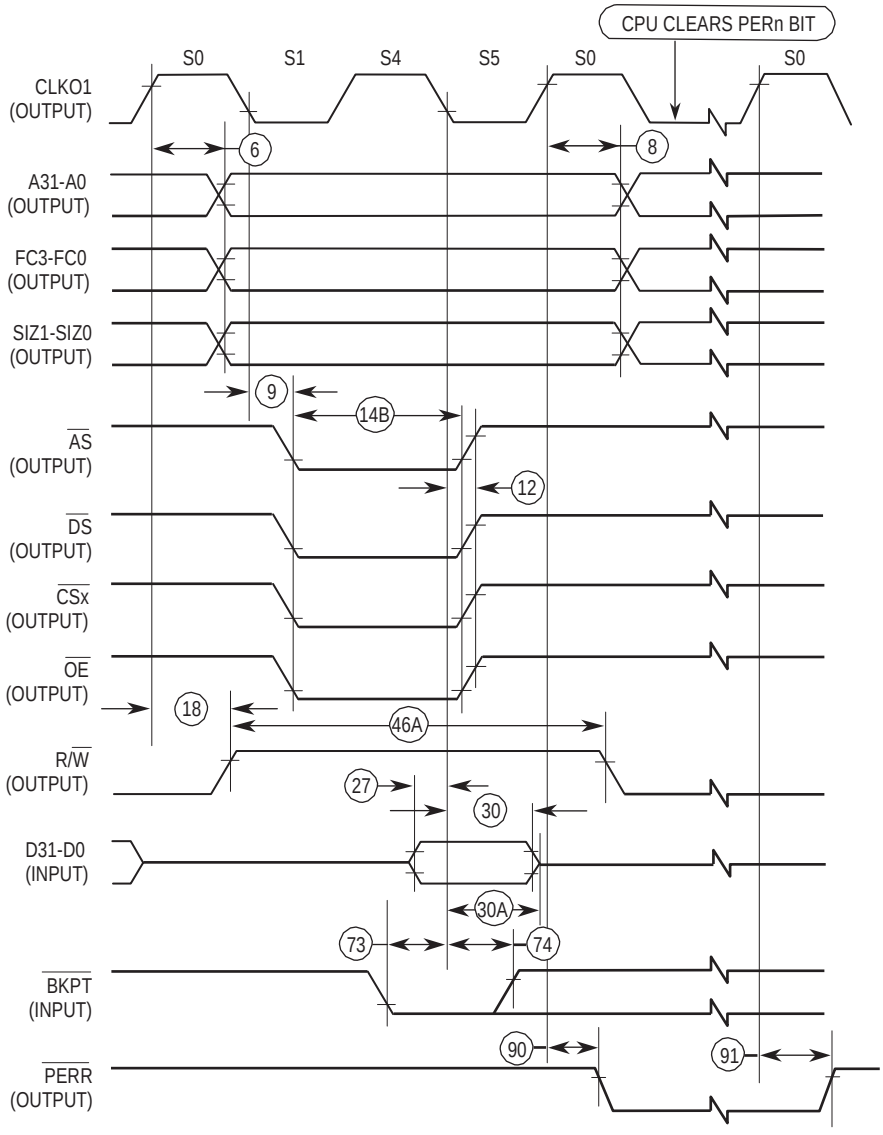

Figure 9. Read Cycle (With Parity Check, PBEE = 1)

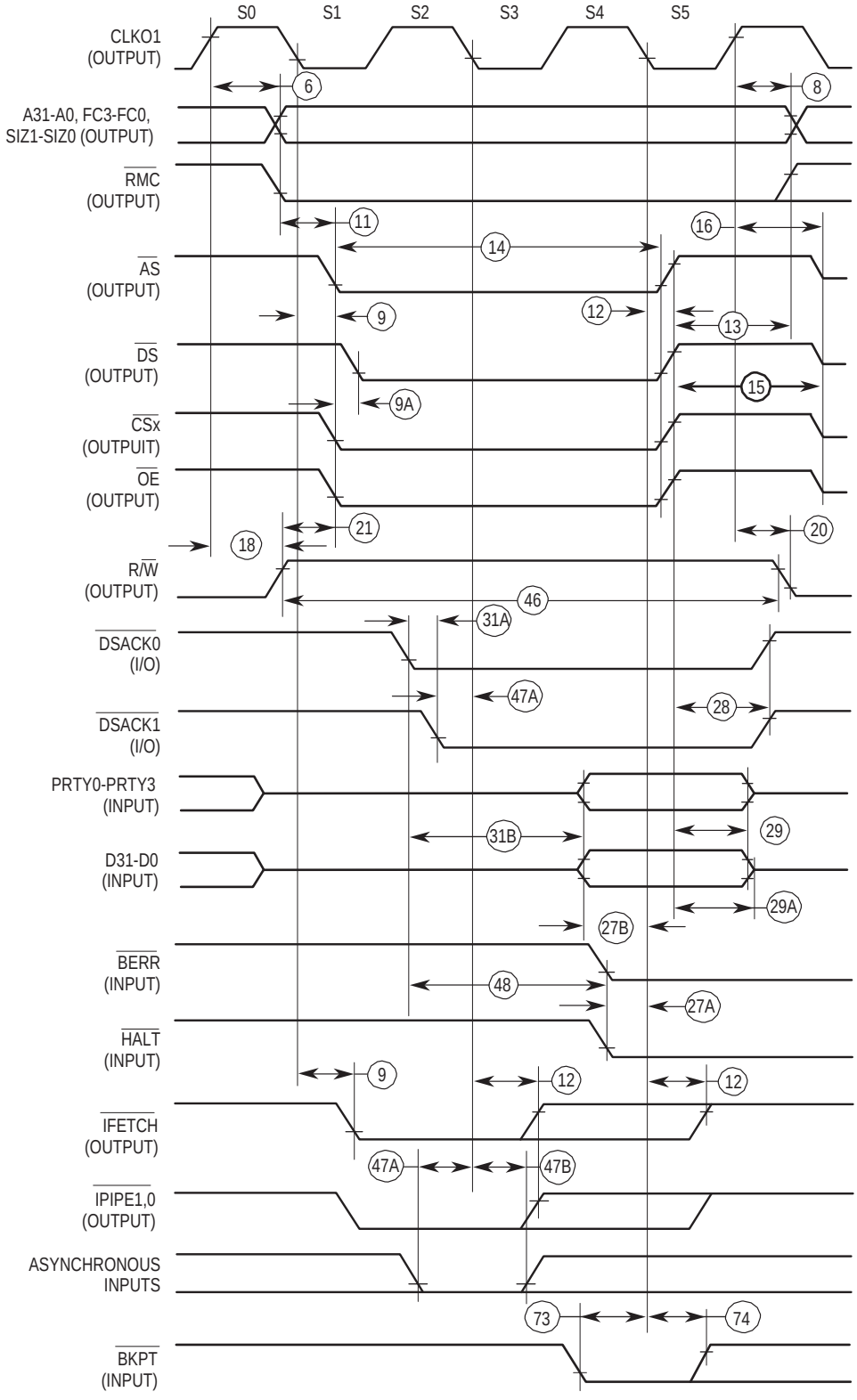

Note: All timing is shown with respect to 0.8V and 2.0V levels.

Figure 10. SRAM: Read Cycle (TRLX = 1)

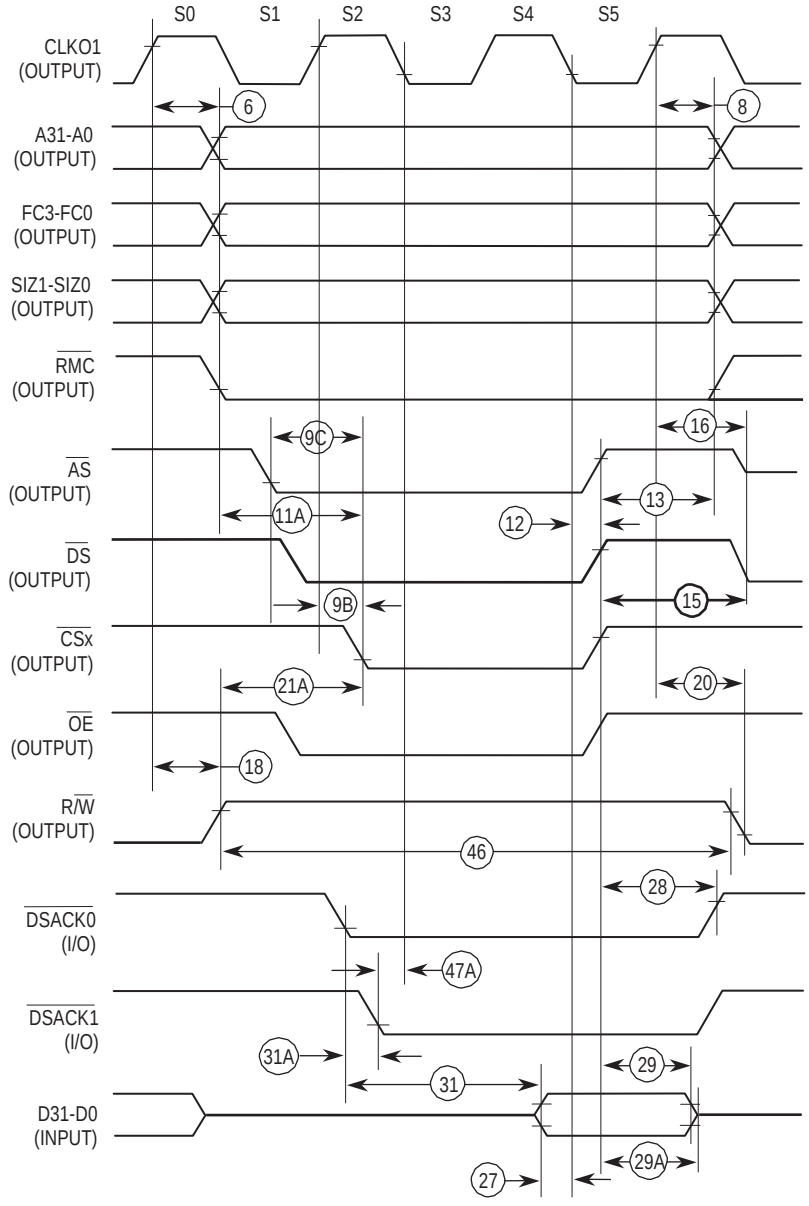

Figure 11. CPU32+ IACK Cycle

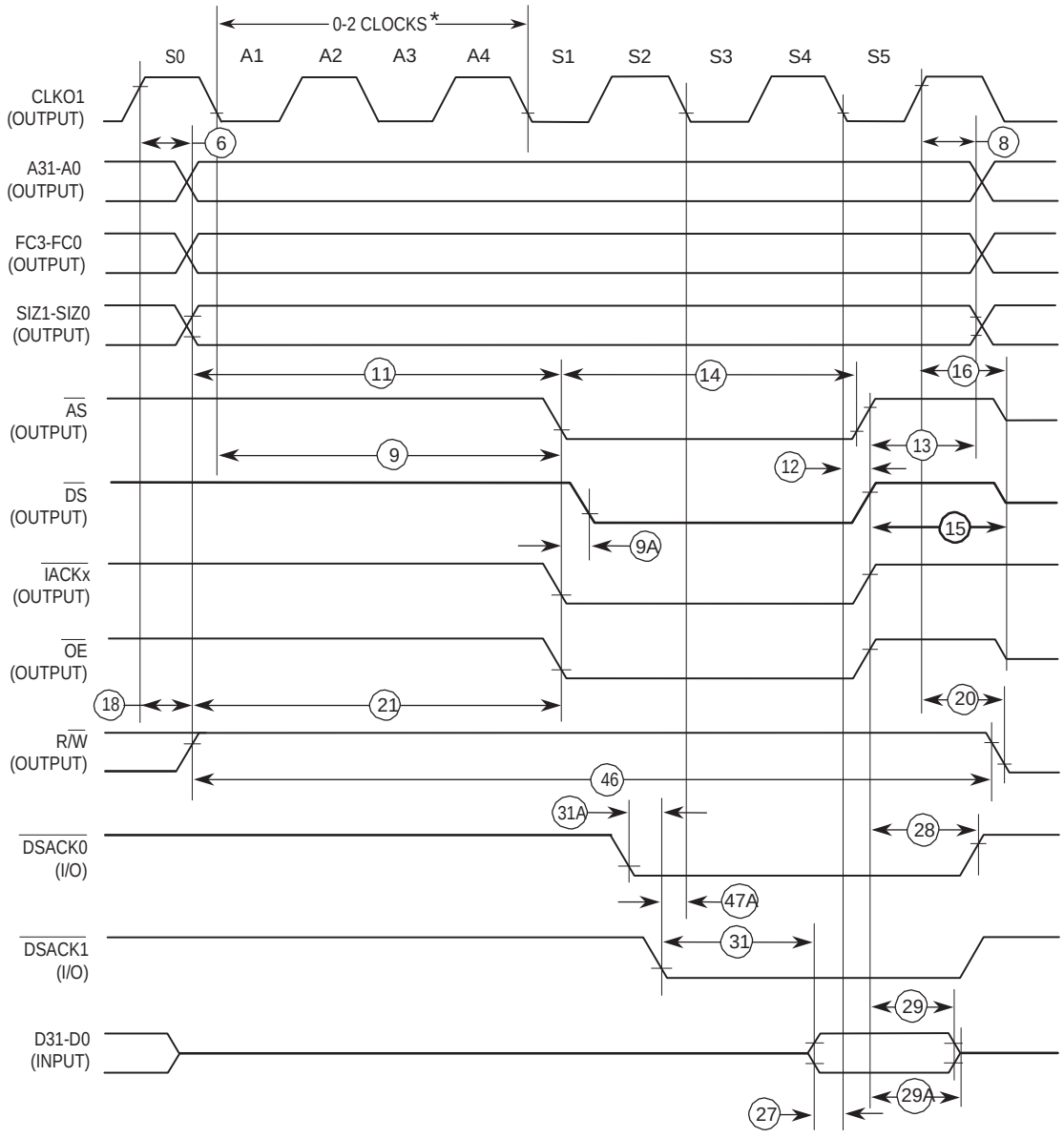

Note: Up to two wait states may be inserted by the processor between states S0 and S1.

Figure 12. Write Cycle

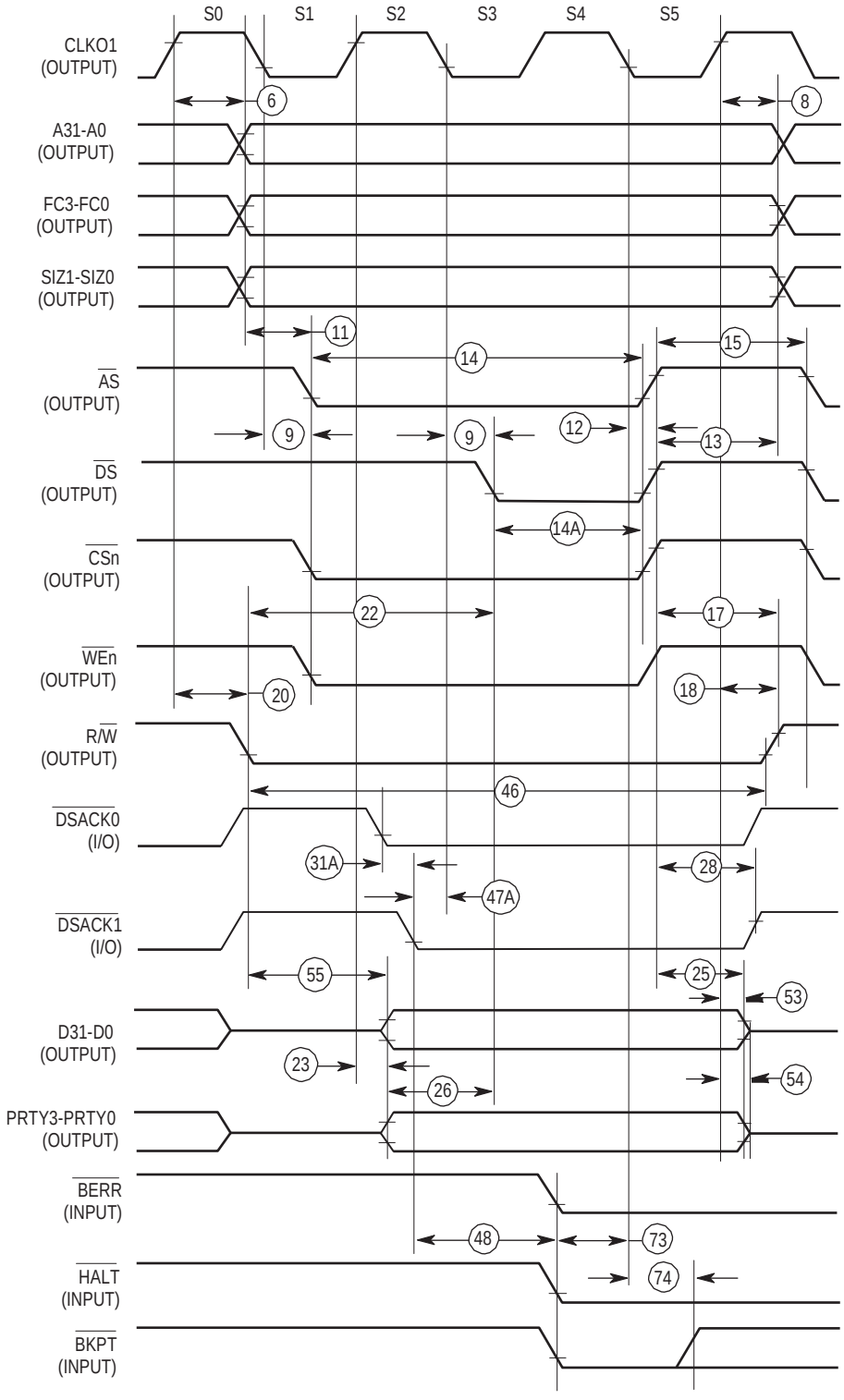

Note: All timing is shown with respect to 0.8V and 2.0V levels.

Figure 13. Fast Termination Write Cycle

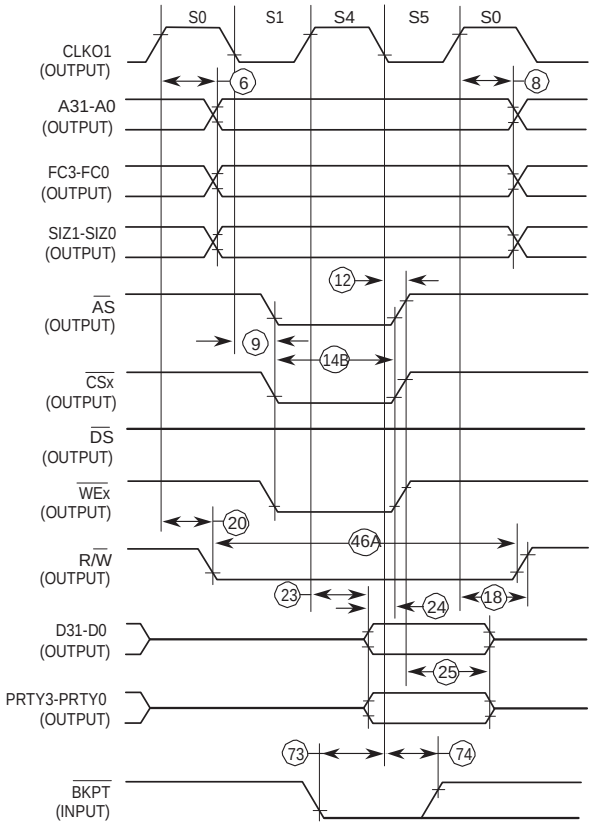

Figure 14. SRAM: Fast Termination Write Cycle (CSNTQ = 1)

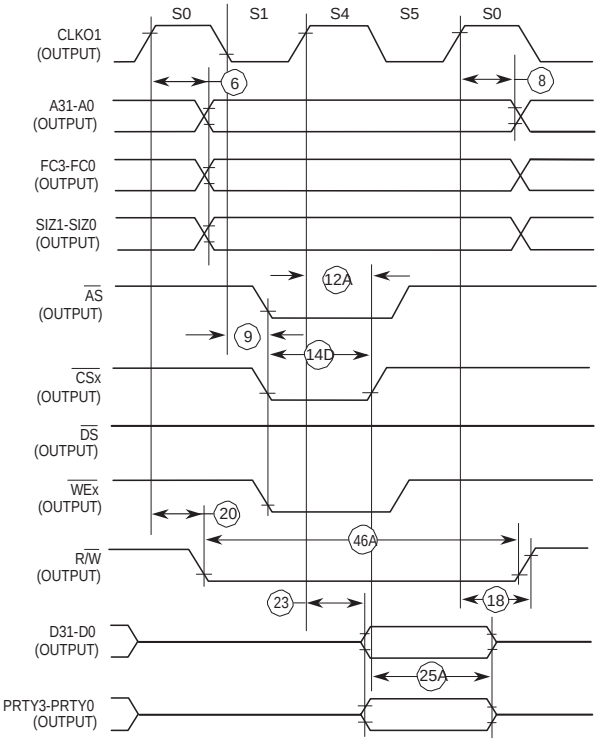

Figure 15. SRAM: Write Cycle (TRLX = 1, CSNTQ = 1, TCYC = 0)

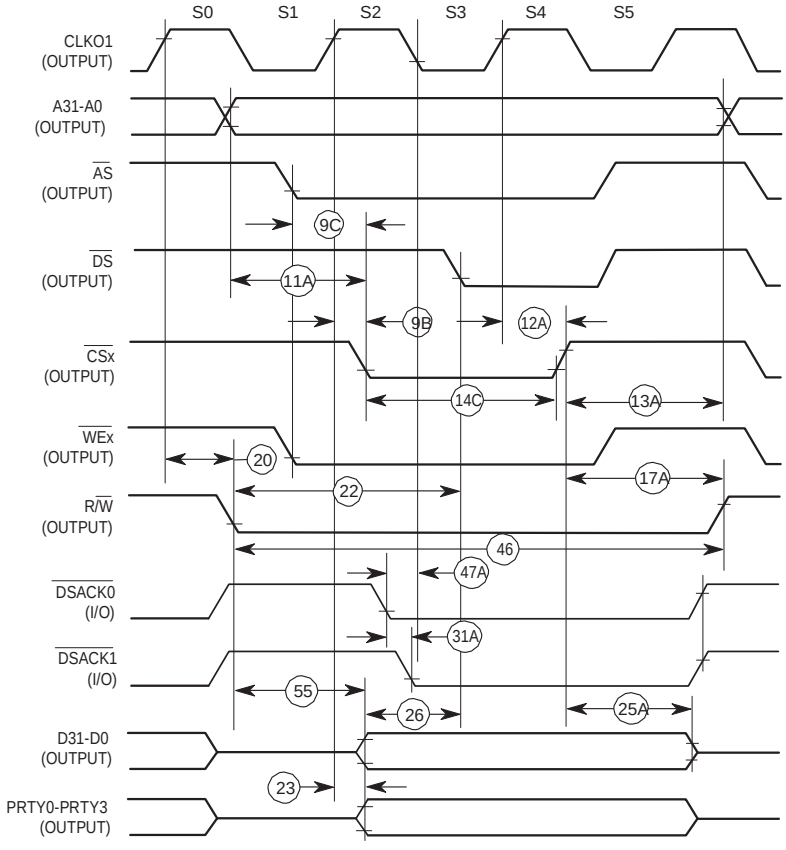

Note: All timing is shown with respect to 0.8V and 2.0V levels.

Figure 16. ASYNC Bus Arbitration – IDLE Bus Case

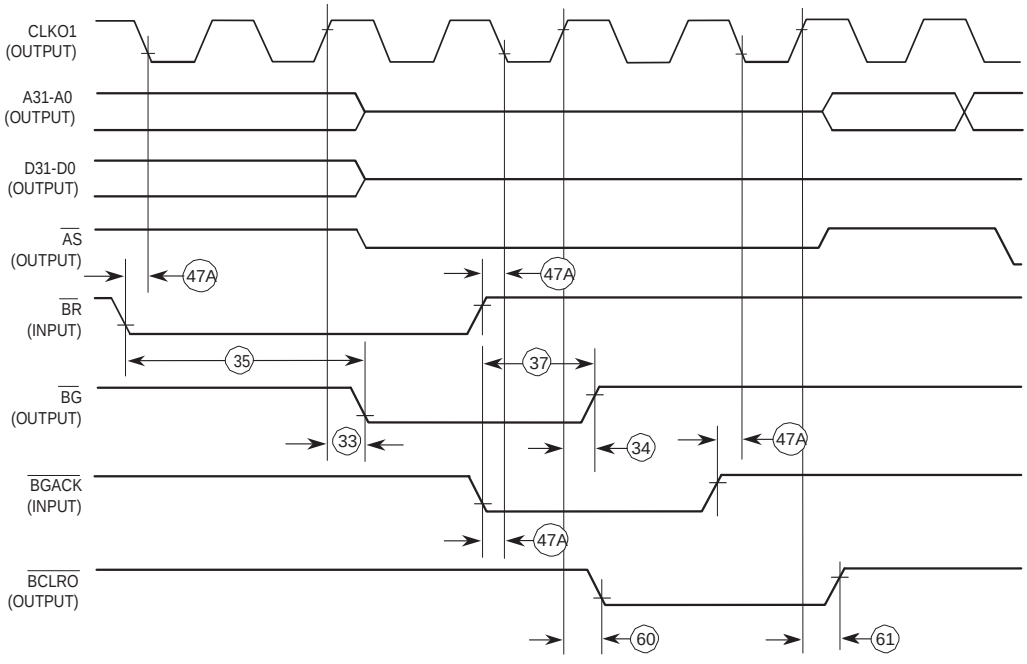

Figure 17. ASYNC Bus Arbitration – Active Bus Case

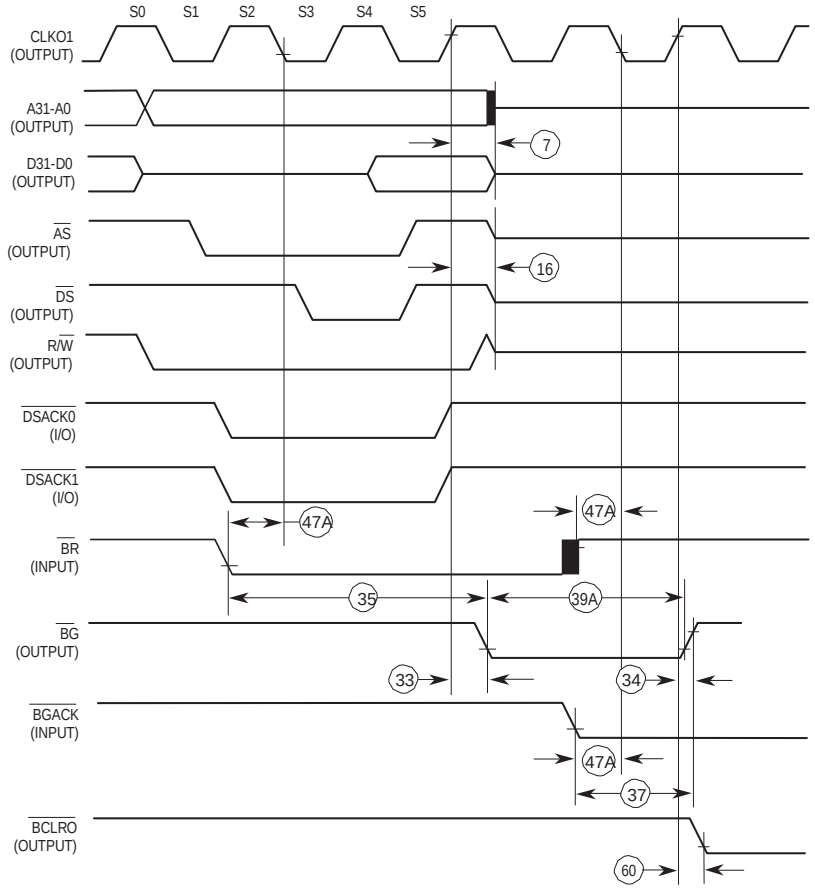

Figure 18. SYNC Bus Arbitration – IDLE Bus Case

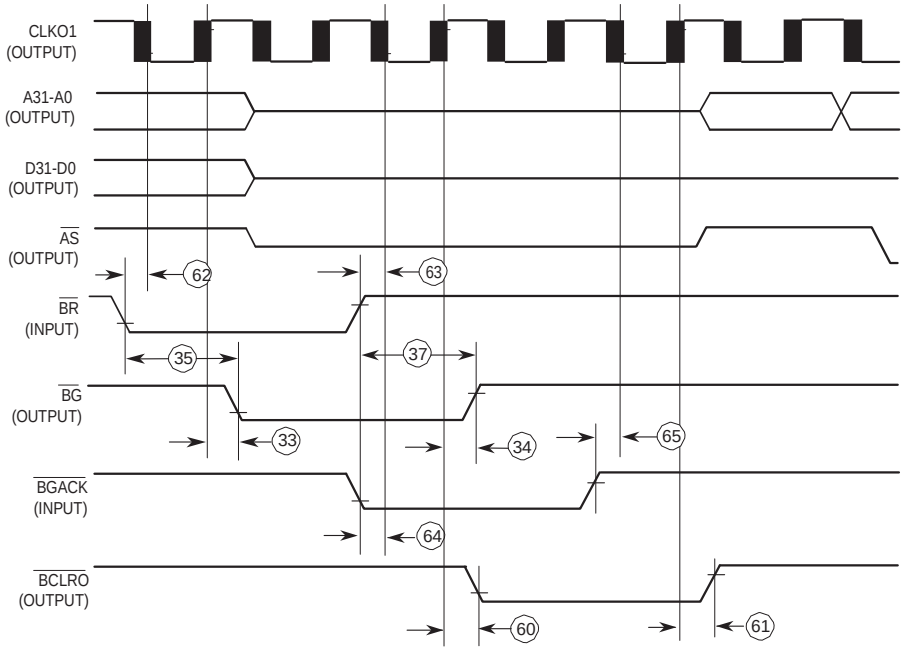

Figure 19. SYNC Bus Arbitration – Active Bus Case

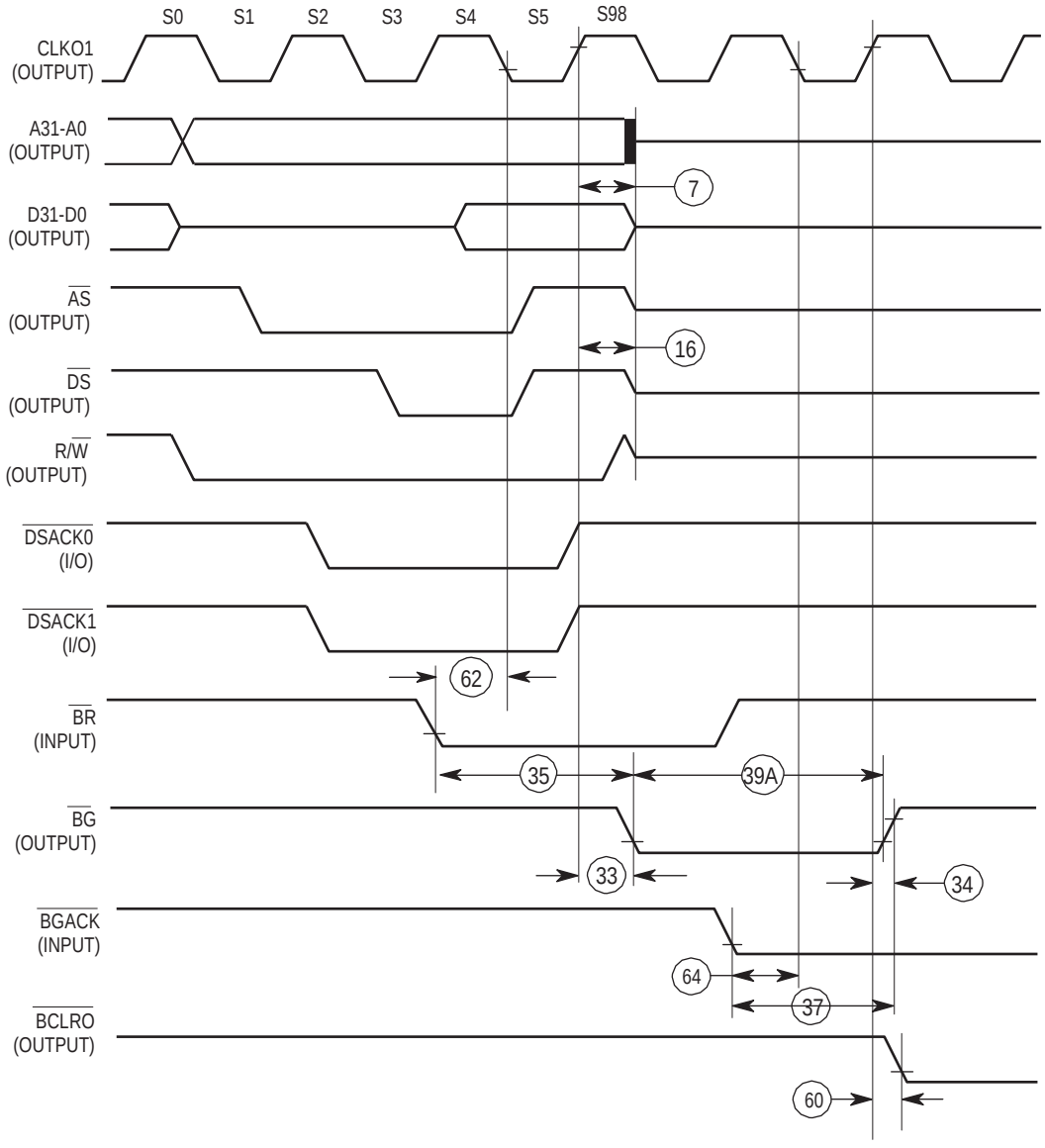

Figure 20. Configuration and Clock Mode Select Timing

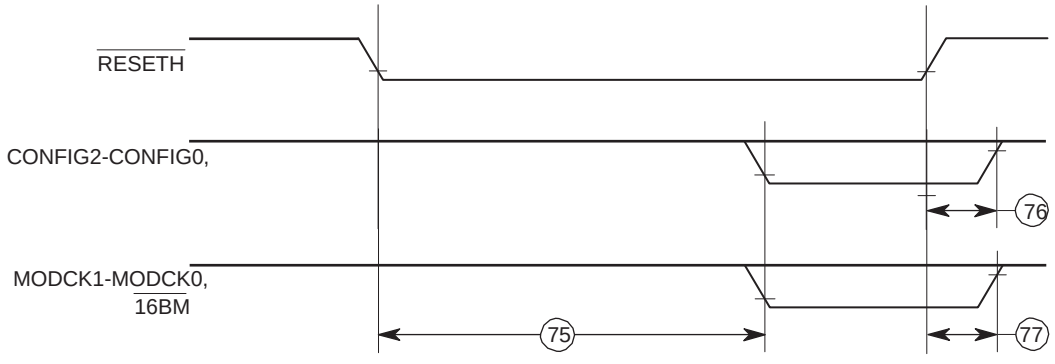

Figure 21. Show Cycle

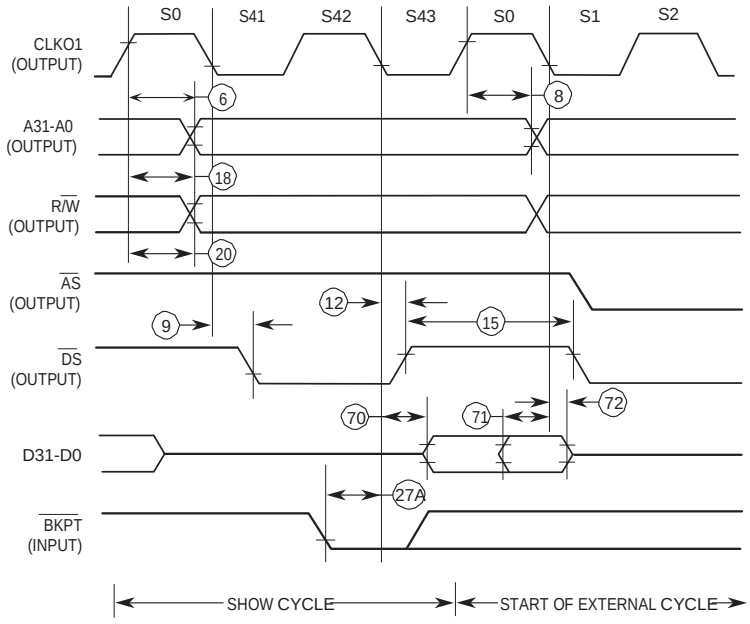

Figure 22. Background Debug Mode FREEZE Timing

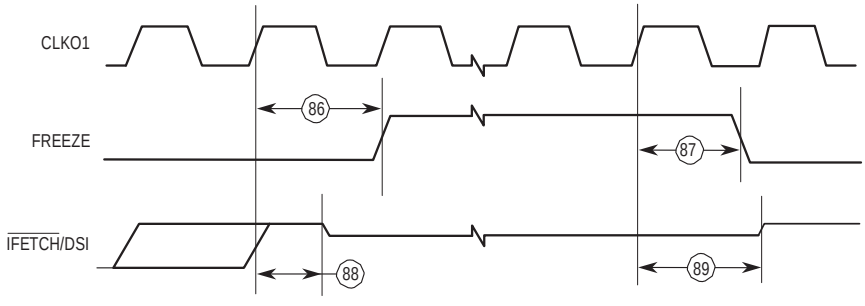

Figure 23. Background Debug Mode Serial Port Timing

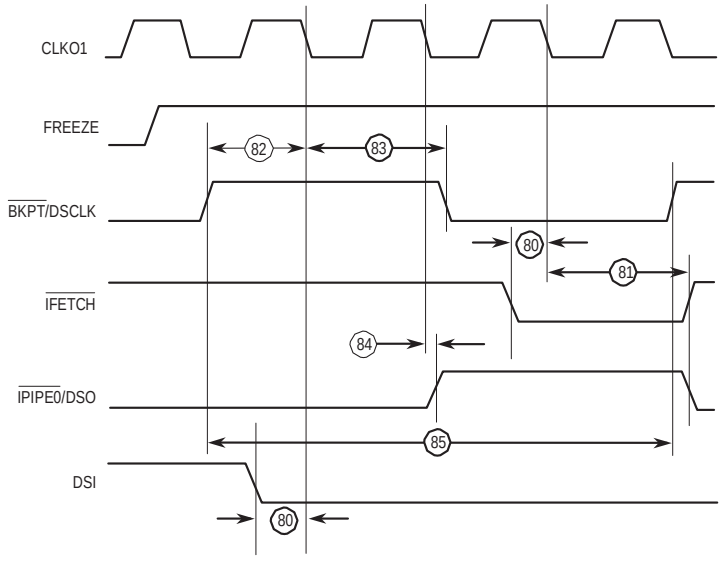

Bus Operation - DRAM Accesses AC Timing Specification

GND = 0 Vdc, T_C = -55 to +125°C. The electrical specifications in this document are preliminary (See Figure 24 to Figure 28).

Number	Characteristic	25.0 MHz		33.34 MHz		Unit
		Min	Max	Min	Max	
100	$\overline{RAS}$x Asserted to Row Address Invalid	15		11.25		ns
101	$\overline{RAS}$x Asserted to column Address Valid	20		15		ns
102	$\overline{RAS}$x Width Asserted	75		56.25		ns
103A	$\overline{RAS}$x width Negated (Back to back Cycle) Non page mode @ WBTQ = 0	75		56.25		ns
103B	$\overline{RAS}$x width Negated (Back to back Cycle) Page mode @ WBTQ = 0	55		41.25		ns
103C	$\overline{RAS}$x width Negated (Back to back Cycle) Non page mode @ WBTQ = 1	115		86.25		ns
103D	$\overline{RAS}$x width Negated (Back to back Cycle) Page mode @ WBTQ = 1	95		69.23		ns
104	$\overline{RAS}$x Asserted to $\overline{CAS}$x Asserted	35		26.25		ns
105	CLKO1 Low to $\overline{CAS}$x Asserted	3	13	2	10	ns
105A	CLKO1 High to $\overline{CAS}$x Asserted (Refresh Cycle)	3	13	2	10	ns
106	CLKO1 High to $\overline{CAS}$x Negated	3	13	2	10	ns
107	Column Address Valid to $\overline{CAS}$x Asserted	15		11.25		ns
108	$\overline{CAS}$x Asserted to Column Address Negated	40		30		ns
109	$\overline{CAS}$x Asserted to $\overline{RAS}$x Negated	35		27		ns
110	$\overline{CAS}$x Width Asserted	50		37.5		ns
111[1]	$\overline{CAS}$x Width Negated (Back to Back Cycles)	95		71.25		ns
111A	$\overline{CAS}$x Width Negated (Page Mode)	20		15		ns
113	$\overline{WE}$ Low to $\overline{CAS}$x Asserted	35		27		ns
114	$\overline{CAS}$x Asserted to $\overline{WE}$ Negated	35		27		ns
115	R/$\overline{W}$ Low to $\overline{CAS}$x Asserted (Write)	52.5		40		ns
116	$\overline{CAS}$x Asserted to R/$\overline{W}$ High (Write)	55		41.25		ns
117	Data-Out, Parity-Out Valid to $\overline{CAS}$x Asserted	10		7.5		ns
119	CLKO1 High to AMUX Negated	3	16	2	12	ns
120	CLKO1 High to AMUX Asserted	3	16	2	12	ns
121	AMUX High to $\overline{RAS}$x Asserted	15		11.25		ns
122	$\overline{RAS}$x Asserted to AMUX Low	15		11.25		ns
123	AMUX Low to $\overline{CAS}$x Asserted	15		11.25		ns
124	$\overline{CAS}$x Asserted to AMUX High	55		41.25		ns
125	$\overline{RAS}$/$\overline{CAS}$x Negated to R/$\overline{W}$ change	0		0		ns

Figure 24. DRAM: Normal Read Cycle (Internal Mux, TRLX = 0)

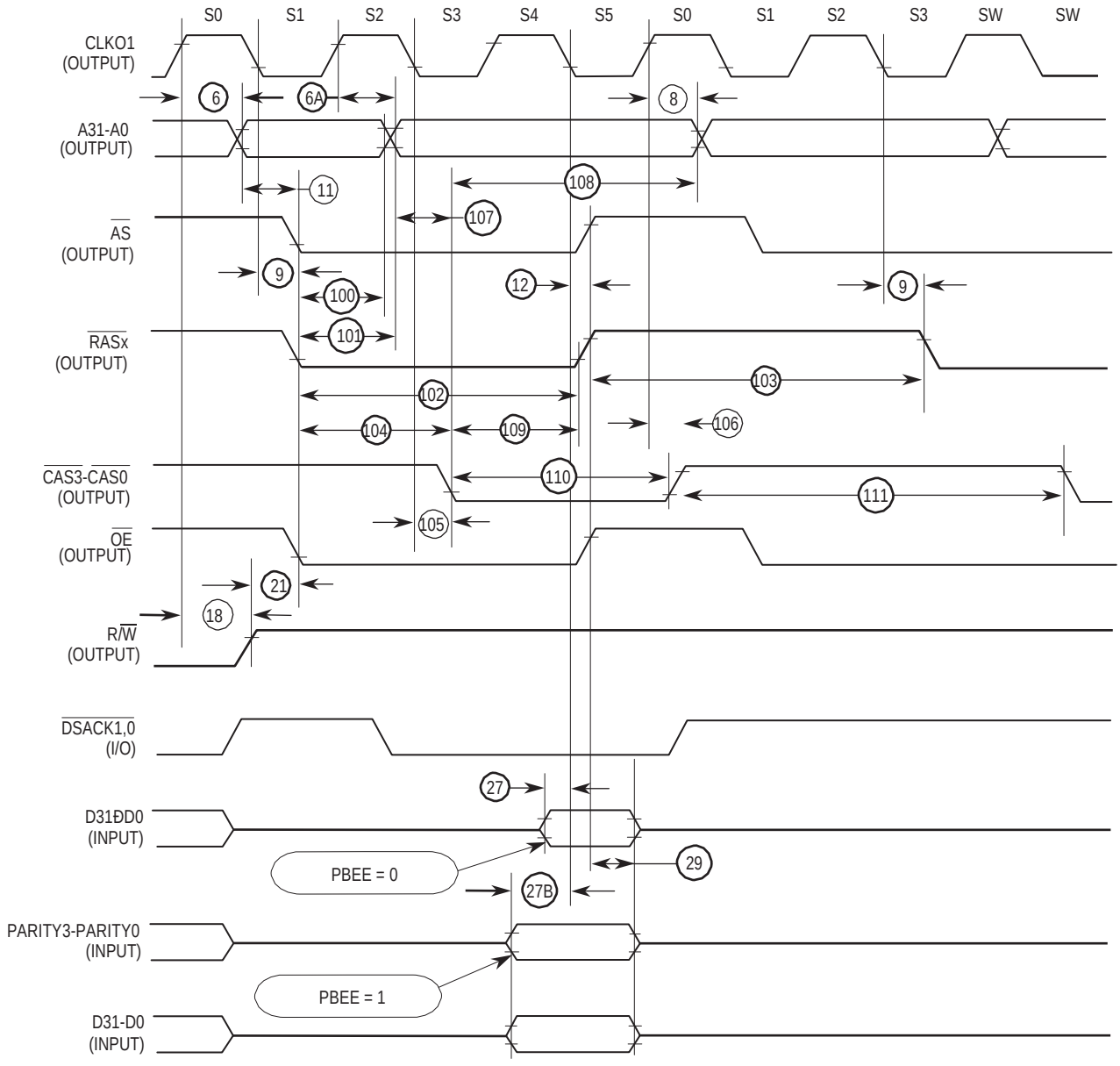

Note: All timing is shown with respect to 0.8V and 2.0V levels.

Figure 25. DRAM: Normal Write Cycle

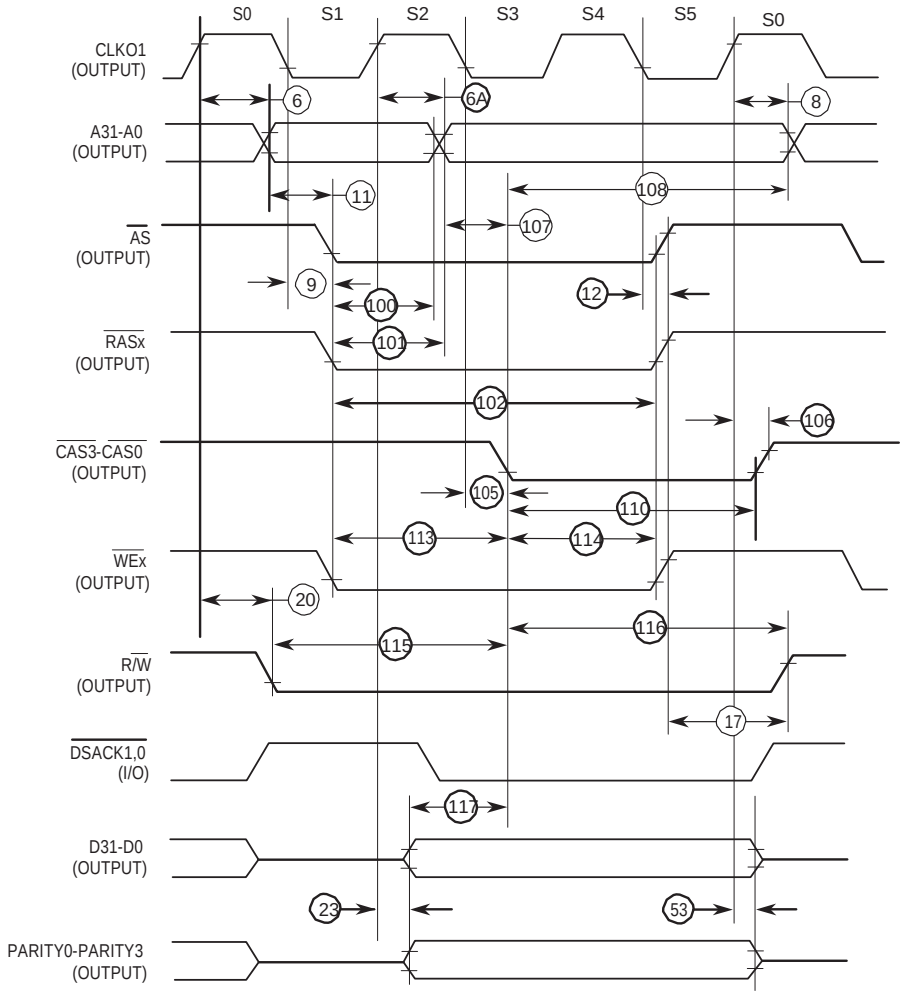

Note: All timing is shown with respect to 0.8V and 2.0V levels.

Figure 26. DRAM: Refresh Cycle

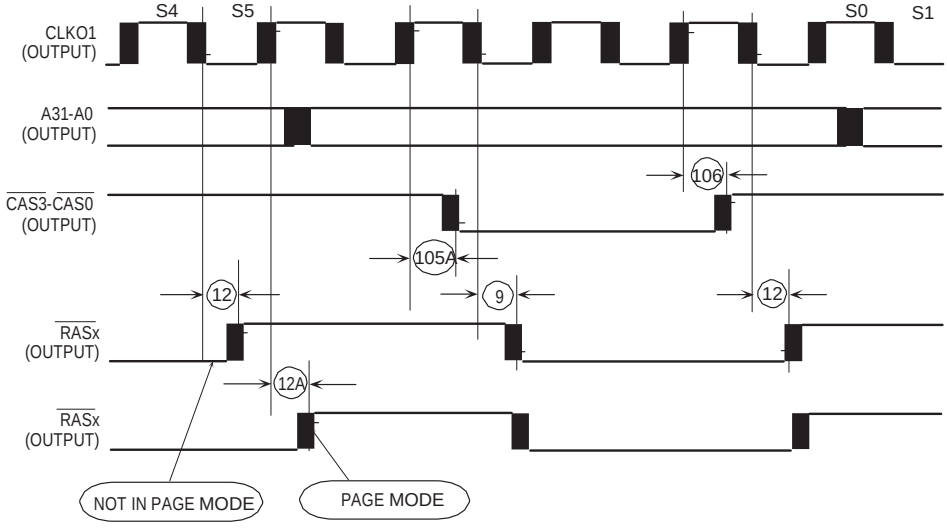

Note: All timing is shown with respect to 0.8V and 2.0V levels.

Figure 27. DRAM: Page Mode – Page-Hit

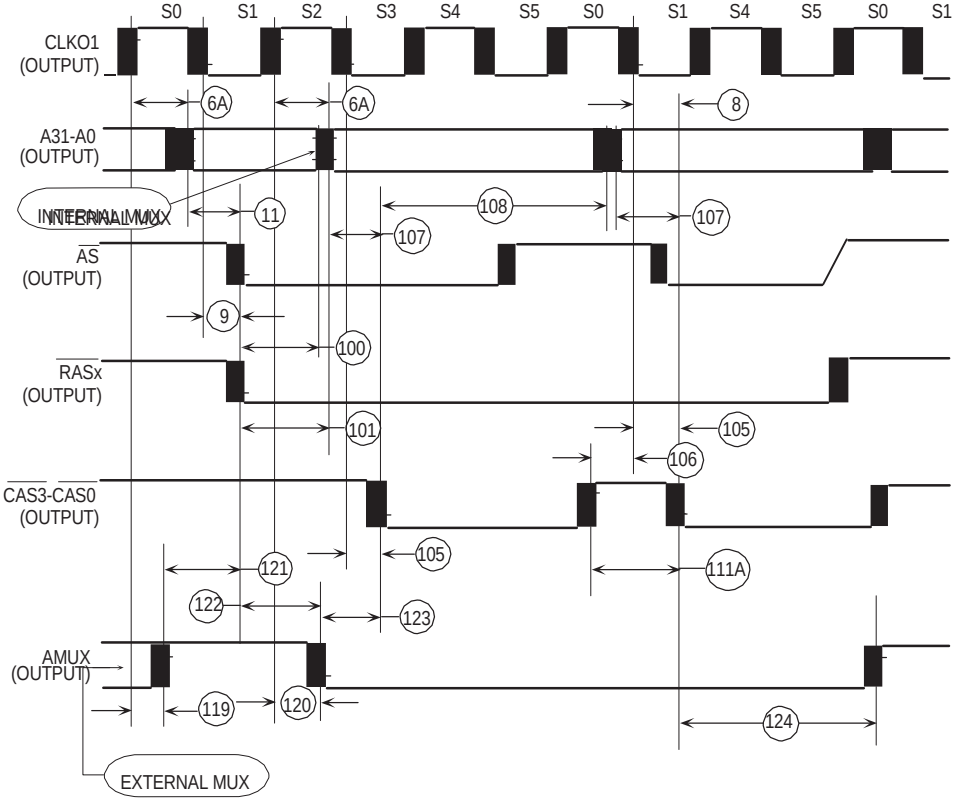

Note: All timing is shown with respect to 0.8V and 2.0V levels.

Figure 28. DRAM: Page Mode – Page-Miss

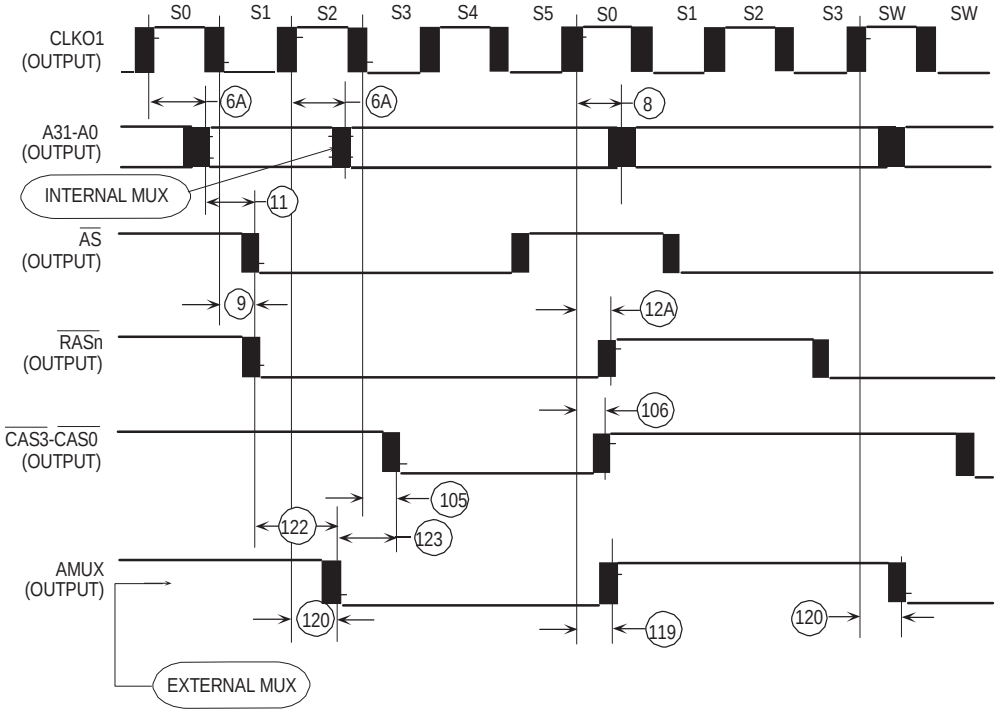

Note: All timing is shown with respect to 0.8V and 2.0V levels.

040 Bus Type Slave Mode Bus Arbitration AC Electrical Specifications

GND = 0 V_{dc}, T_C = -55 to +125°C. The electrical specifications in this document are preliminary (See Figure 29).

Number	Characteristic	25.0 MHz		33.34 MHz		Unit
		Min	Max	Min	Max	
231	Address, Transfer Attributes High Impedance to Clock High	7	-	6	-	ns
232(1)	Clock High to $\overline{BG}$ Low	-	20	-	15	ns
233	Clock High to $\overline{BG}$ High	4	20	4	15	ns
234	$\overline{BB}$ High to Clock High (040 output)	7	-	6	-	ns
235	$\overline{BB}$ High Impedance to Clock High (040 output)	0	-	0	-	ns
236	Clock High to $\overline{BB}$ Low (360 Output)	-	20	-	15	ns
237	Clock High to $\overline{BB}$ High (360 Output)	-	20	-	15	ns
238	Clock Low to $\overline{BB}$ High Impedance (360 output)	-	20	-	15	ns

Note: 1. $\overline{BG}$ remains low until either the SDMA or the IDMA requests the external bus.

Figure 29. TS68040 Companion Mode Arbitration

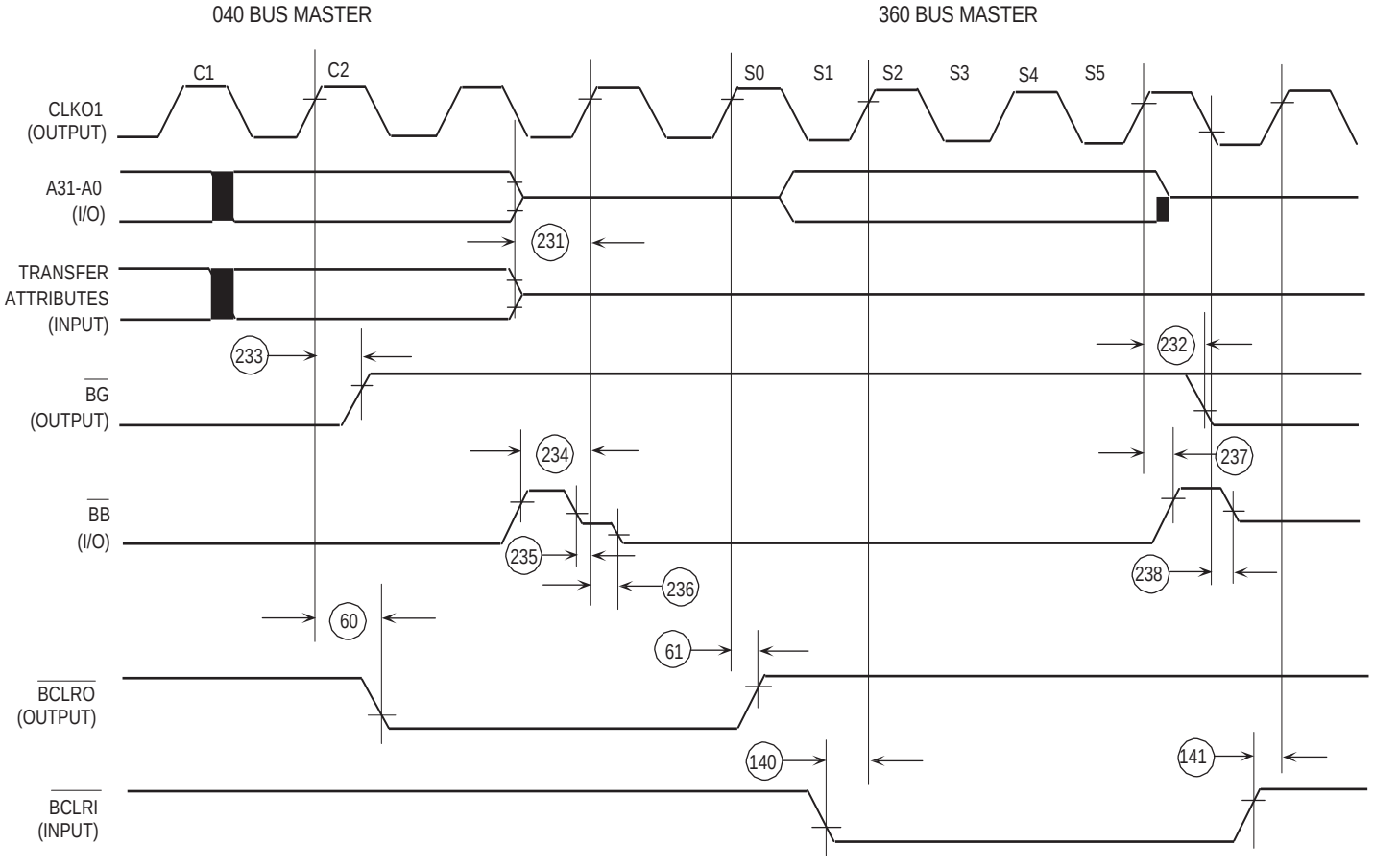

Notes: 1. TS68040 Transfer Attribute Signals = SIZx, TTx, TMx, R/$\overline{W}$, $\overline{LOCK}$.
2. $\overline{BG}$ always remains asserted until either the SDMA or the IDMA requests the external bus.

040 Bus Type Slave Mode Internal Read/Write/Lack Cycles AC Electrical Specifications

GND = 0 Vdc, T_C = -55 to +125°C. The electrical specifications in this document are preliminary
(See Figure 30 to Figure 33)

Number	Characteristic	25.0 MHz		33.34 MHz		Unit
		Min	Max	Min	Max	
251[1]	Address, Transfer Attributes Valid to Clock Low	15	-	11.25	-	ns
252	$\overline{TS}$ Low to Clock High	7	-	6	-	ns
253	Clock High to $\overline{TS}$ High	5	-	3	-	ns
254	Clock high to Address, Transfer Attributes Invalid	0	-	0	-	ns
255	Data-In, $\overline{MBARE}$ Valid to Clock High (040 Write)	0	-	0	-	ns
256	Clock High to Data-In, $\overline{MBARE}$ Hold Time	0	-	0	-	ns
257	Clock High to $\overline{TA}$, $\overline{TBI}$ Low (External to External)	4	20	4	15	ns
257	Clock High to $\overline{TA}$, $\overline{TBI}$ Low (External to Internal)	4	23	4	18	ns
258[2][3]	Clock High to $\overline{TA}$, $\overline{TBI}$ High	4	20	4	15	ns
259	$\overline{TA}$, $\overline{TBI}$ High to $\overline{TA}$, $\overline{TBI}$ High Impedance	-	15	-	11.25	ns
260	Clock Low to Data-Out Valid (040 Read)	-	20	-	15	ns
262	Clock Low to Data-Out Invalid	-	20	-	15	ns
263	Clock Low to Data-Out High Impedance	-	15	-		ns
264	Clock High to $\overline{AVECO}$ Low	-	20	-	15	ns
265	Clock Low to $\overline{AVECO}$ High Impedance	-	30	-	23	ns
266	Clock Low to $\overline{IACK}$ Low	-	30	-	23	ns
267	Clock High to $\overline{IACK}$ High	-	30	-	23	ns
268	Clock Low to $\overline{AVEC}$ Low	-	30	-	23	ns

Notes: 1. Transfer attributes signals = SIZx, TTx, TMx, R/$\overline{W}$and LOCK.
2. When TS68040 is accessing the internal registers, specification 258 is from clock low not clock high.
3. The clock reference is EXTAL, not CLK01.TS68040 Internal Registers Read Cycles

Figure 30. TS68040 Internal Registers Read Cycles

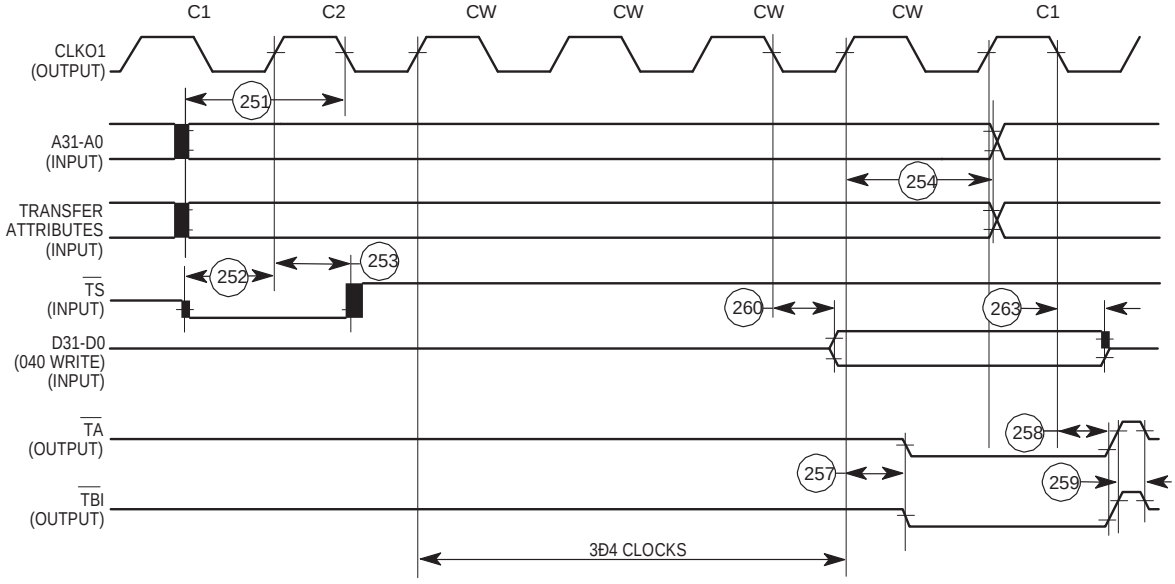

Notes: 1. Three wait states are inserted when reading the SIM, dual-port RAM, and CPM. Four wait states are inserted when reading the SI RAM. Additional wait states may be inserted when the SHEN1-SHEN0 = 10 and one of the internal masters is accessing an internal peripheral.
2. TS68040 Transfer Attribute Signals = SIZx, TTx, TMx, R/$\overline{W}$, $\overline{LOCK}$.

Figure 31. TS68040 Internal Registers Write Cycles

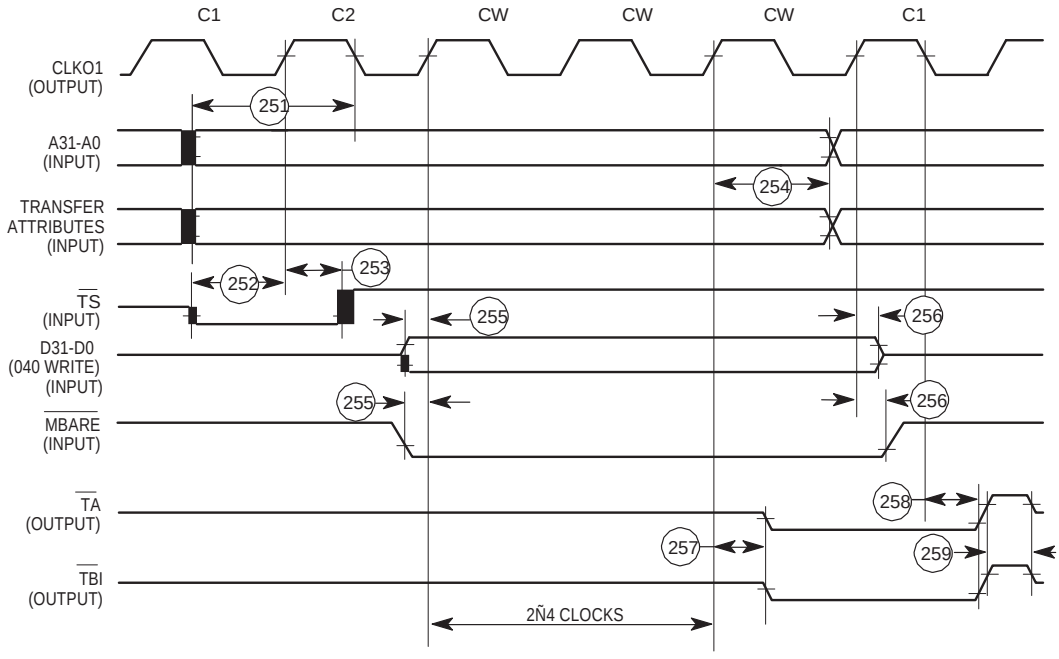

Notes: 1. Two wait states are inserted when writing. Three wait states are inserted when writing to the dual-port RAM and CPM. Four wait states are inserted when writing to the SI RAM. Additional wait states may be inserted when the SHEN1-SHEN0 = 10 and one of the internal masters is accessing an internal peripheral.
2. TS68040 Transfer Attribute Signals = SIZx, TTx, TMx, R/$\overline{W}$, $\overline{LOCK}$.

Figure 32. TS68040 IACK Cycles (Vector Driven)

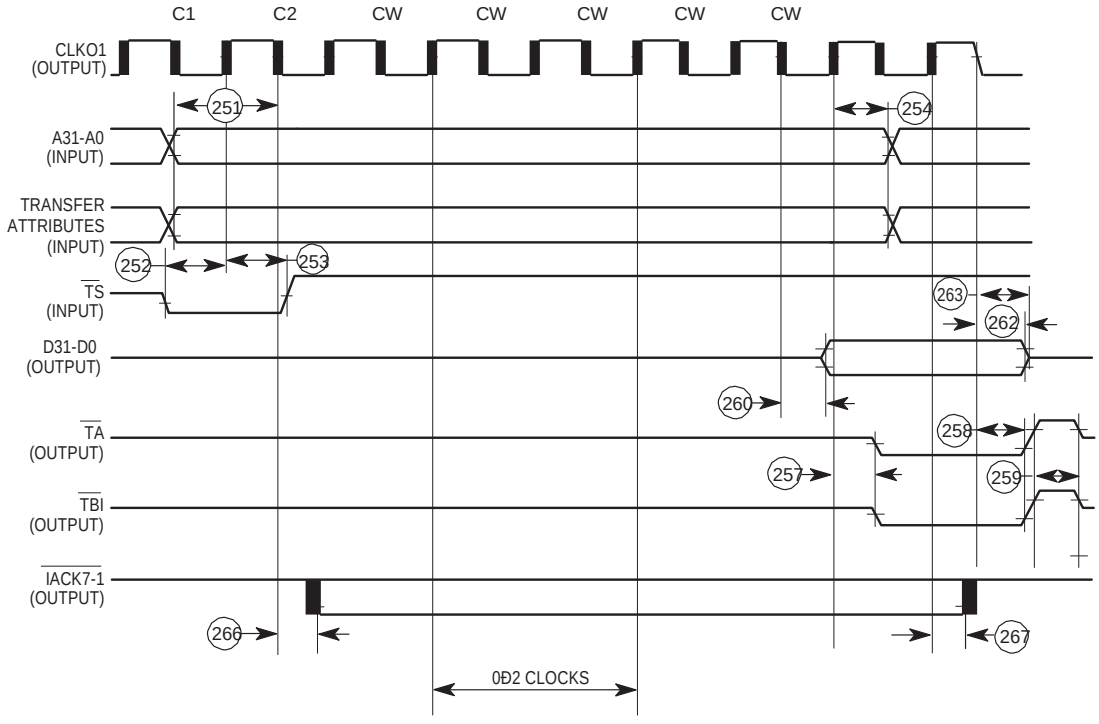

Notes: 1. TS68040 Transfer Attribute Signals = SIZx, TTx, TMx, R/$\overline{W}$, $\overline{LOCK}$.
2. Up to two wait states may be inserted for internal peripheral.

Figure 33. TS68040 IACK Cycles (No Vector Driven)

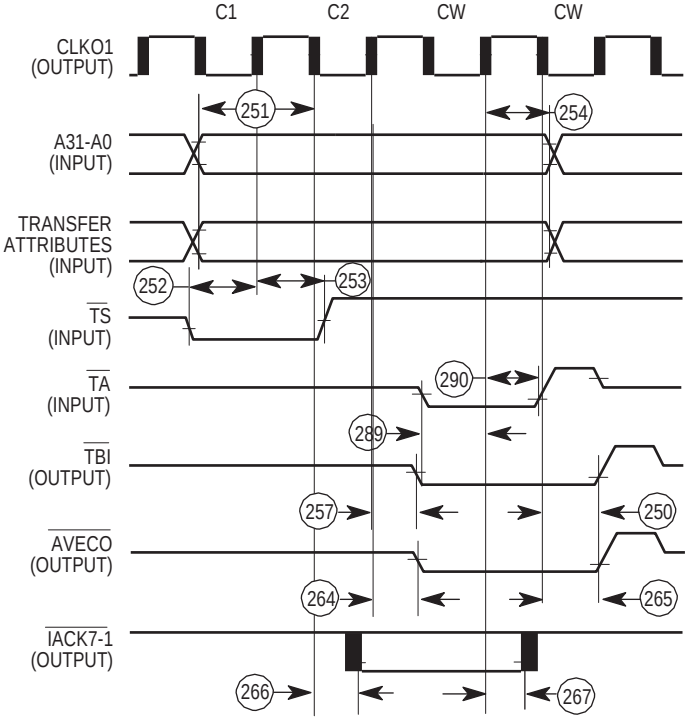

Note: TS68040 Transfer Attribute Signals = SIZx, TTx, TMx, R/$\overline{W}$, $\overline{LOCK}$.

040 Bus Type SRAM/DRAM Cycles AC Electrical Specifications

GND = 0 Vdc, T_C = -55 to +125°C. The electrical specifications in this document are preliminary (See Figure 34 to Figure 38).

Number	Characteristic	25.0 MHz		33.34 MHz		Unit
		Min	Max	Min	Max	
280	Address Valid to BADD2-3 Valid	-	20	-	15	ns
280A	BADD2-3 Valid to CAS Assertion	15	-	10	-	ns
281	Address Invalid to BADD2-3 Invalid	0	-	0	-	ns
282	Clock High to $\overline{CSx}$/$\overline{RASx}$ Low (TSS40 = 0)	4	16	4	12	ns
283	Clock High to $\overline{CSx}$/$\overline{RASx}$ High (CSNT40 = 0)	4	16	4	12	ns
284	Clock High to BRK Low	-	20	-	15	ns
284A	Clock Low to BRK Low	-	20	-	15	ns
285	Clock high to BRK High	-	20	-	15	ns
286	Clock Low to $\overline{CSx}$/$\overline{RASx}$ Low (TSS40 = 1)	4	16	4	12	ns
287	Clock Low to $\overline{CSx}$/$\overline{RASx}$ High (CSNT40 = 1)	4	16	4	12	ns
288(1)	Address Transfer Attributes Valid to Clock High (TSS40 = 0)	10	-	10	-	ns
289(2)	$\overline{TA}$ Low to Clock High (External Termination)	11	-	9	-	ns
290(2)	Clock High to $\overline{TA}$ High (External Termination)	-	20	-	15	ns
291	Clock High to $\overline{OE}$ Low (Read Cycles)	-	20	-	15	ns
292	Clock High to $\overline{OE}$ High (Read Cycles)	-	20	-	15	ns
293	Clock High to $\overline{WE}$ Low (Write Cycles)	-	20	-	15	ns
294	Clock High to $\overline{WE}$ High (Write Cycles)	-	20	-	15	ns
295	Clock High to $\overline{CASx}$ Low	4	13	4	10	ns
295A	Clock Low to $\overline{CASx}$ Low (040 Burst Read only)	4	13	4	10	ns
296(3)	Clock High to $\overline{CASx}$ High	4	13	4	10	ns
297	Clock Low to AMUX Low	3	16	3	12	ns
298	Clock High to AMUX High	3	16	3	12	ns
299	Clock High to BADD2-3 Valid (040 Burst Cycles)	4	20	4	15	ns
300(2)	$\overline{TEA}$ Low to Clock High	11	-		-	ns
301(2)	Clock High to $\overline{TEA}$ High	2	20	2	15	ns
302	Data, Parity Valid to Clock High (Data, Parity Setup)	7	-	6	-	ns
303	Clock High to Data, Parity Invalid (Data, Parity Hold)	7	-	5	-	ns
305	CLKO1 High (After $\overline{TS}$ Low) to Parity Valid	-	20	-	15	ns
306	CLKO1 High (After $\overline{TA}$ Low) to Parity Hi-Z	4	20		15	ns

Notes: 1. Transfer attributes signals = SIZx, TTx, TMx, R/$\overline{W}$ and LOCK.
2. $\overline{TEA}$/$\overline{TA}$ should not be asserted on a DRAM burst access, or on the same clock or before $\overline{RASx}$/$\overline{CSx}$ is asserted.
3. The clock reference is EXTAL, not CLK01.

Figure 34. TS68040 SRAM Read/Write Cycles (TSS40 = 0, CSNT40 = 0)

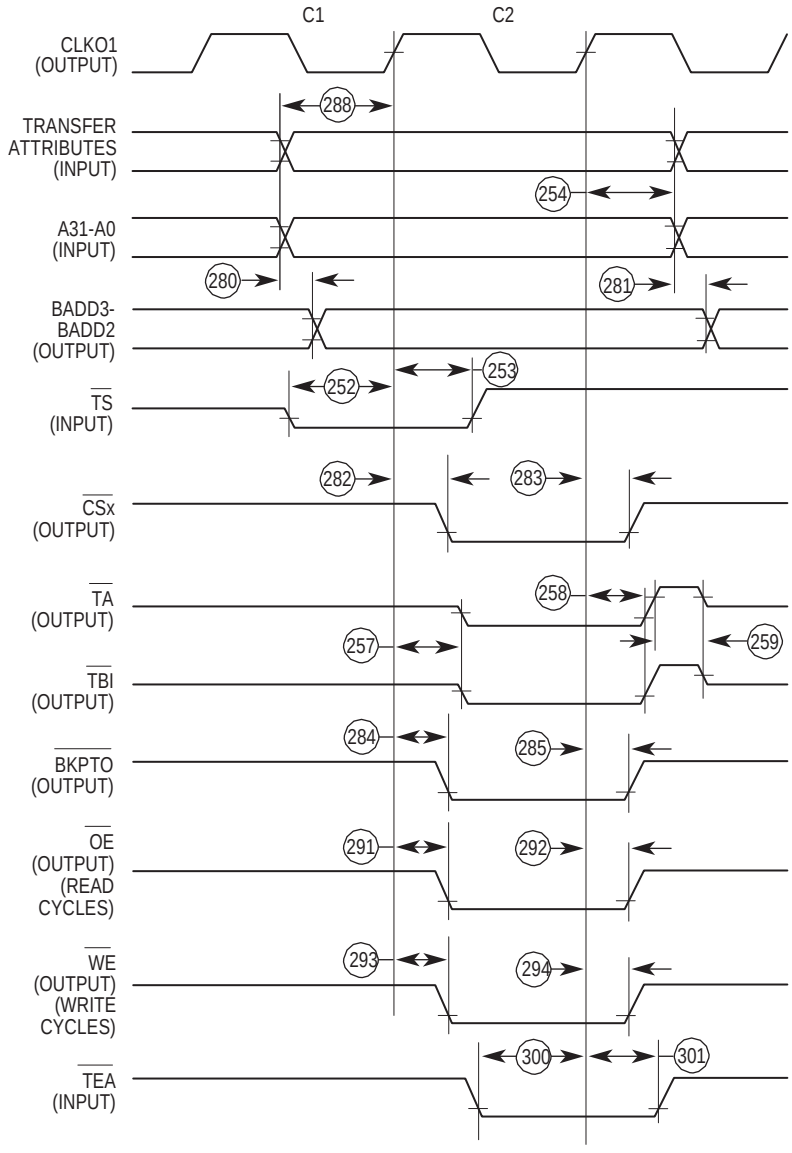

Note: TS68040 Transfer Attribute Signals = SIZx, TTx, TMx, R/$\overline{W}$, $\overline{LOCK}$.

Figure 35. TS68040 SRAM Read/Write Cycles (TSS40 = 1, CSNT40 = 1)

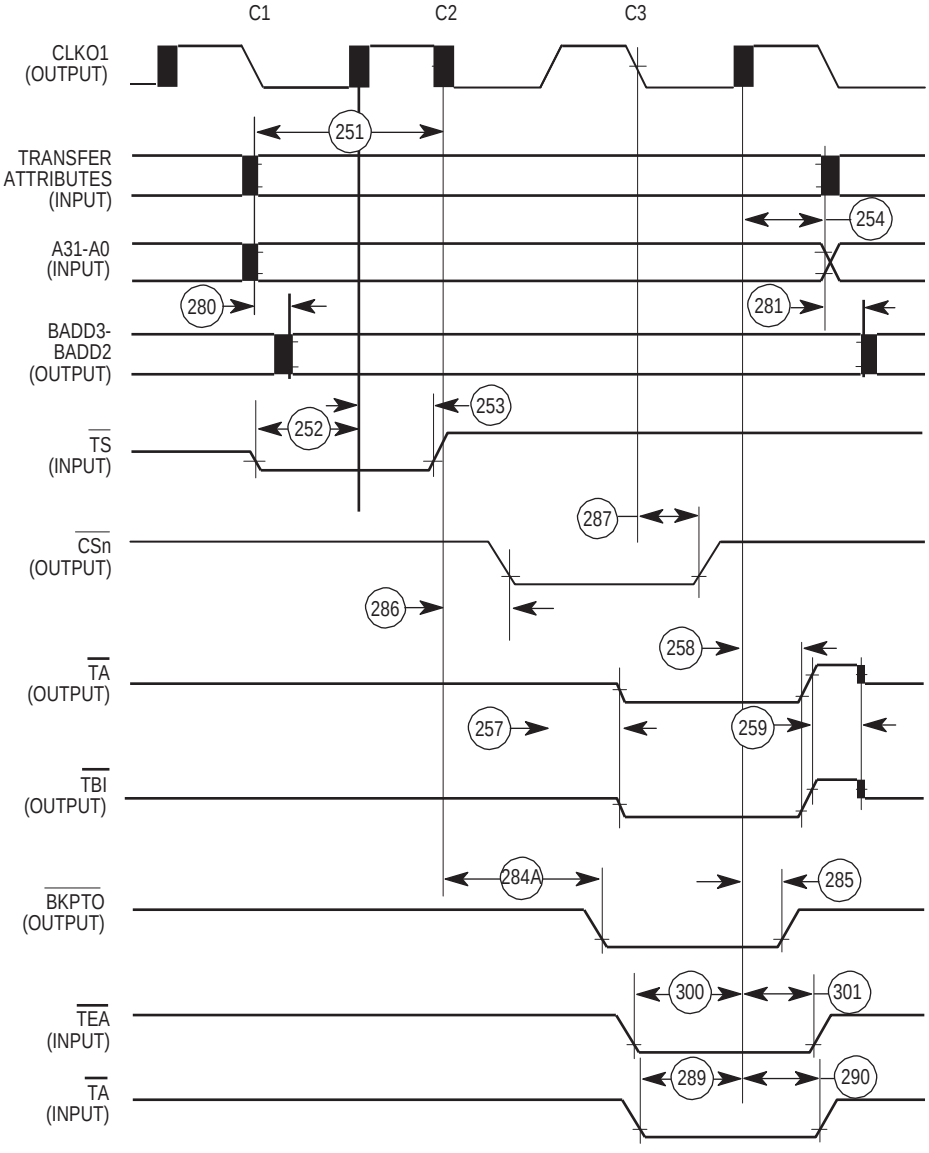

Figure 36. External TS68040 DRAM Cycles Timing Diagram

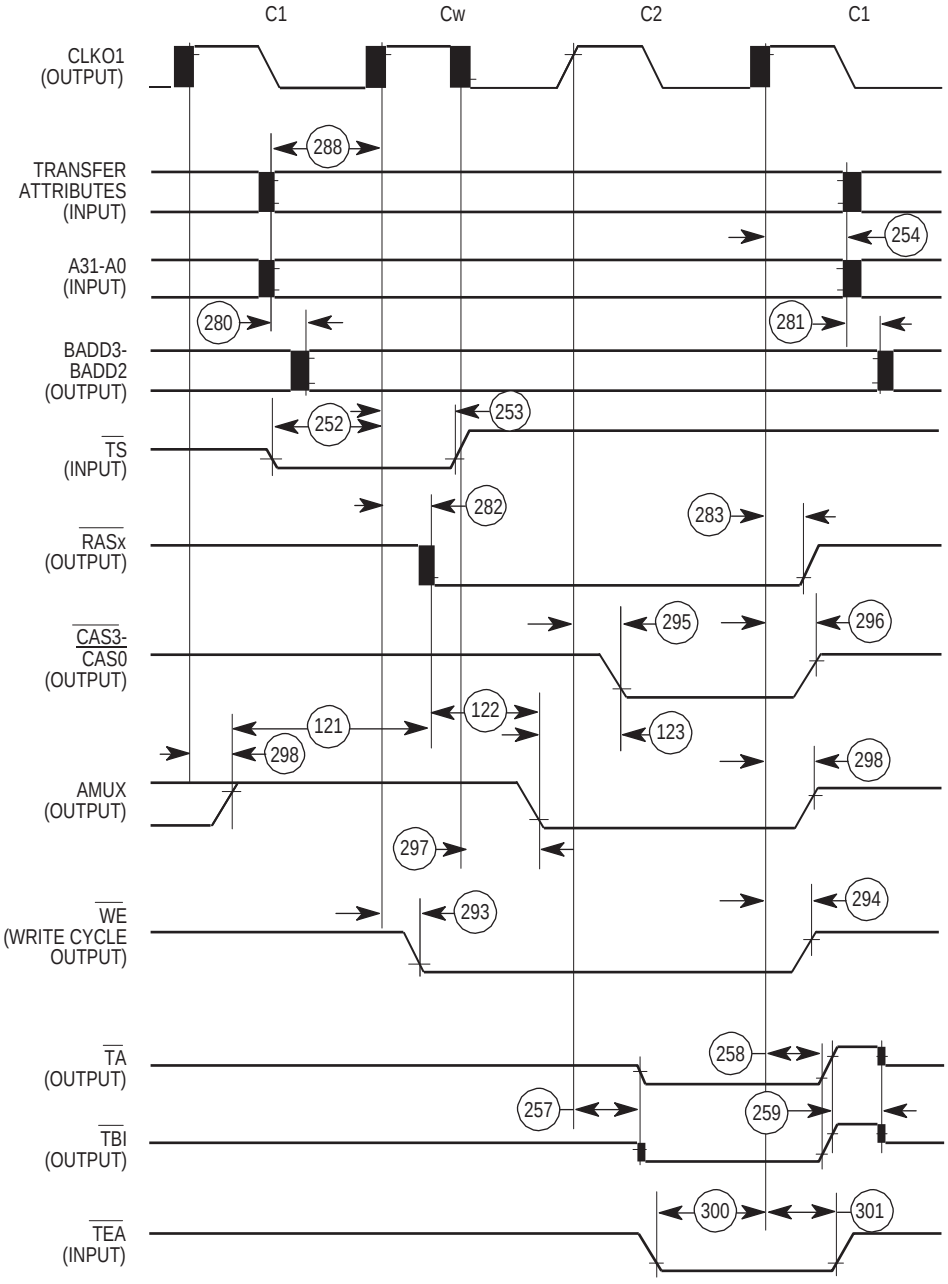

Figure 37. External TS68040 DRAM Burst Cycles Timing Diagram

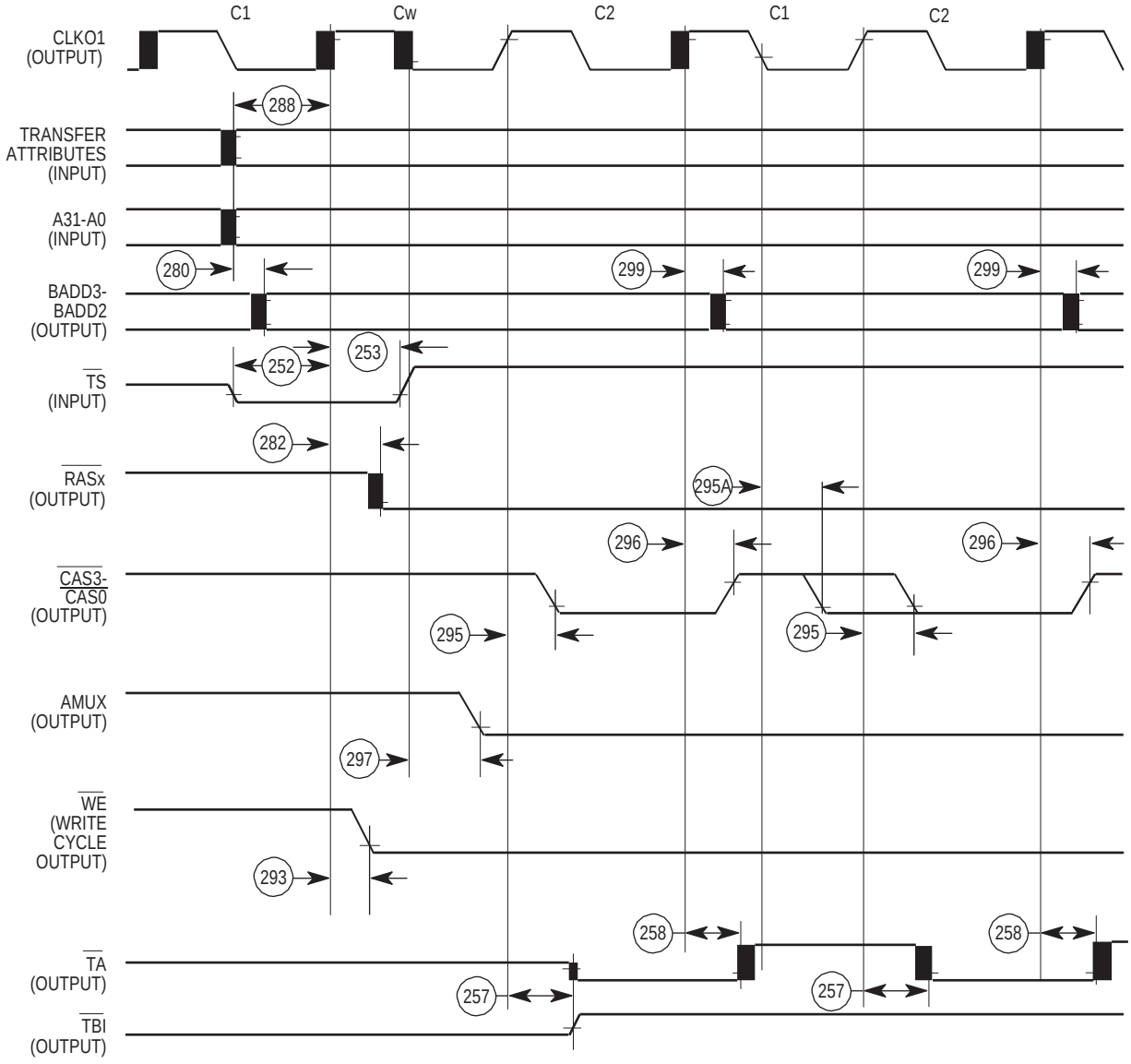

Figure 38. External TS68040 Parity Bit Checking Timing Diagram

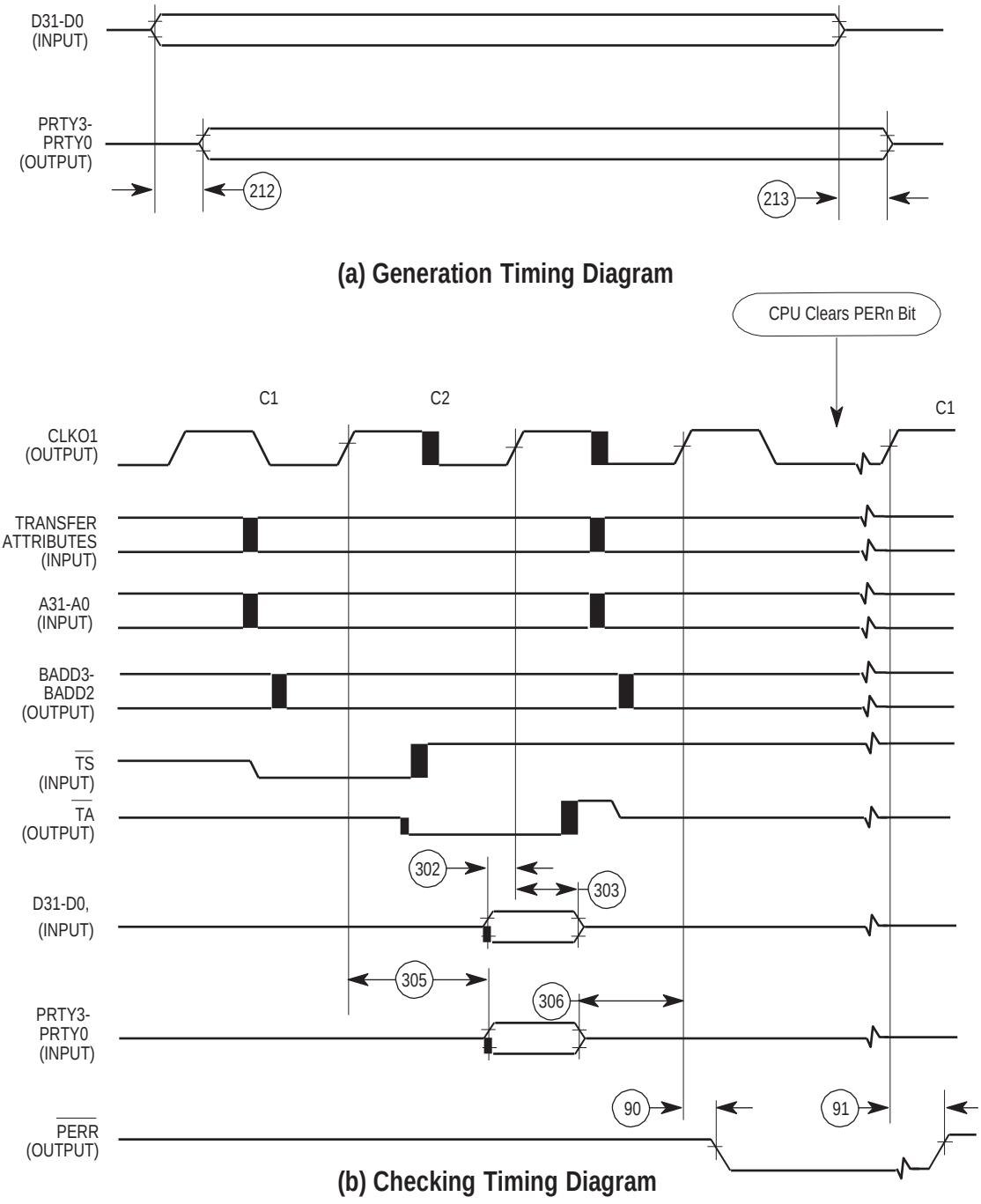

IDMA AC Electrical Specifications

GND = 0 V_{DC}, T_C = -55 to +125°C.The electrical specifications in this document are preliminary (See Figure 39 and Figure 40).

Number	Characteristic	25.0 MHz		33.34 MHz		Unit
		Min	Max	Min	Max	
1	CLKO1 Low to $\overline{DACK}$, $\overline{DONE}$ Asserted	3	24	3	18	ns
2	CLKO1 Low to $\overline{DACK}$, $\overline{DONE}$ Negated	3	24	3	18	ns
3(1)	$\overline{DREQx}$ Asserted to $\overline{AS}$ Asserted (for DMA Bus Cycle)	$3t_{cyc} + t_{AIST} + t_{CLSA}$				
4(1)	Asynchronous Input Setup Time to CLKO1 Low	12	-	9	-	ns
5(1)	Asynchronous Input Hold Time from CLKO1 Low	0	-	0	-	ns
6	$\overline{AS}$ to $\overline{DACK}$ Assertion Skew	0	20	0	15	ns
7	$\overline{DACK}$ to $\overline{DONE}$ Assertion Skew	-8	8	-6	6	ns
8	$\overline{AS}$, $\overline{DACK}$, $\overline{DONE}$ Width Asserted	70	-	52.5	-	ns
8A	$\overline{AS}$, $\overline{DACK}$, $\overline{DONE}$ Width Asserted (Fast Termination Cycle)	28	-	20.5	-	ns
10(1)	Asynchronous Input Setup Time to CLKO1 Low	5	-	4	-	ns
11(1)	Asynchronous Input Hold Time from CLKO1 Low	10	-	7.5	-	ns
12(2)	DREQ Input Setup Time to CLKO1 Low	20	-	15	-	ns
13(2)	DREQ Input Hold Time from CLKO1 Low	5	-	3.75	-	ns
14(2)	DONE Input Setup Time to CLKO1 Low	20	-	15	-	ns
15(2)	DONE Input Hold Time From CLKO1 Low	5	-	3.75	-	ns
16(2)	DREQ Asserted to $\overline{AS}$ Asserted	2	-	2	-	clk

Notes: 1. These specifications are for asynchronous mode.
2. These specifications are for synchronous mode.

Figure 39. IDMA Signal Asynchronous Timing Diagram

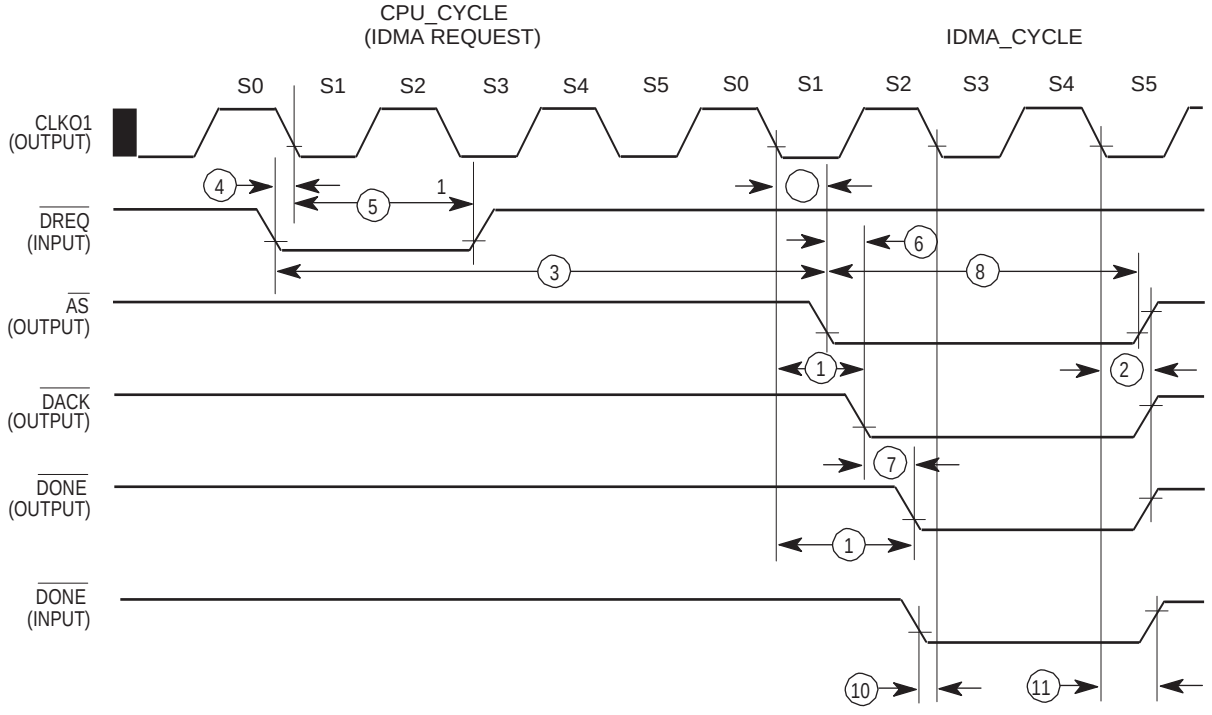

Figure 40. IDMA Signal Synchronous Timing Diagram

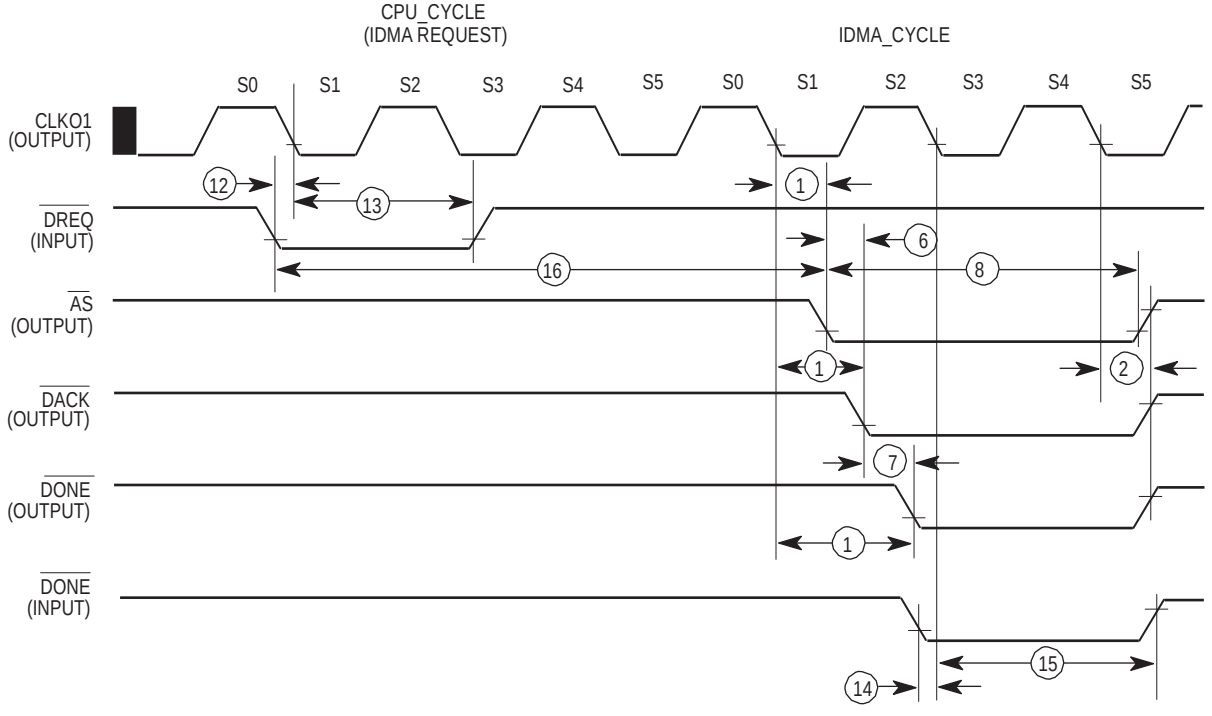

PIP/PIO Electrical Specifications

GND = 0 Vdc, T_C = -55 to +125°C.The electrical specifications in this document are preliminary (See Figure 41 to Figure 45).

Number	Characteristic	25.0 MHz		33.34 MHz		Unit
		Min	Max	Min	Max	
21	Data-In Setup Time to STBI Low	0	-	0	-	ns
22	Data-In Hold Time to STBI High	2.5 - t3	-	2.5 - t3	-	clk
23	STBI Pulse Width	1.5	-	1.5	-	clk
24	STBO Pulse Width	1 CLKO1 - 5 ns	-	1 CLKO1 - 5 ns	-	-
25	Data-Out Setup Time to STBO Low	2	-	2	-	clk
26	Data-Out Hold Time from STBO High	5	-	5	-	clk
27	STBI Low to STBO Low (Rx Interlock)	-	2	-	2	clk
28	STBI Low to STBO High (Tx Interlock)	2	-	2	-	clk
29	Data-In Setup Time to Clock Low	20	-	15	-	ns
30	Data-In Hold Time from Clock Low	10	-	7.5	-	ns
	Clock High to Data-Out Valid (CPU Writes Data, Control, or Direction)	-	25	-	25	ns

Note: 1. t3 = spec. 3 on “AC Electrical Specifications Control Timing” on page 17.

Figure 41. PIP Rx (Interlock Mode)

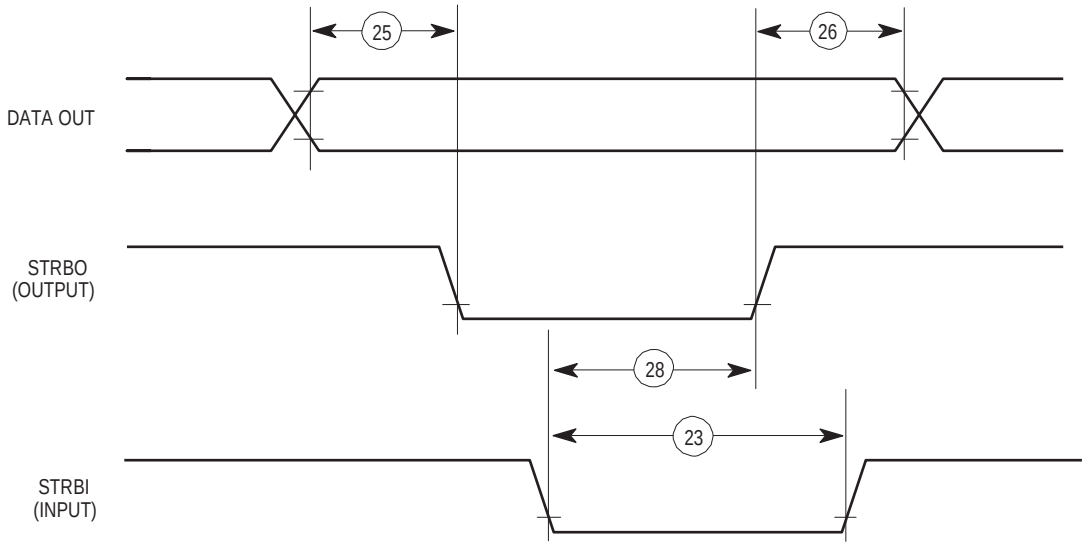

Figure 42. PIP Tx (Interlock Mode)

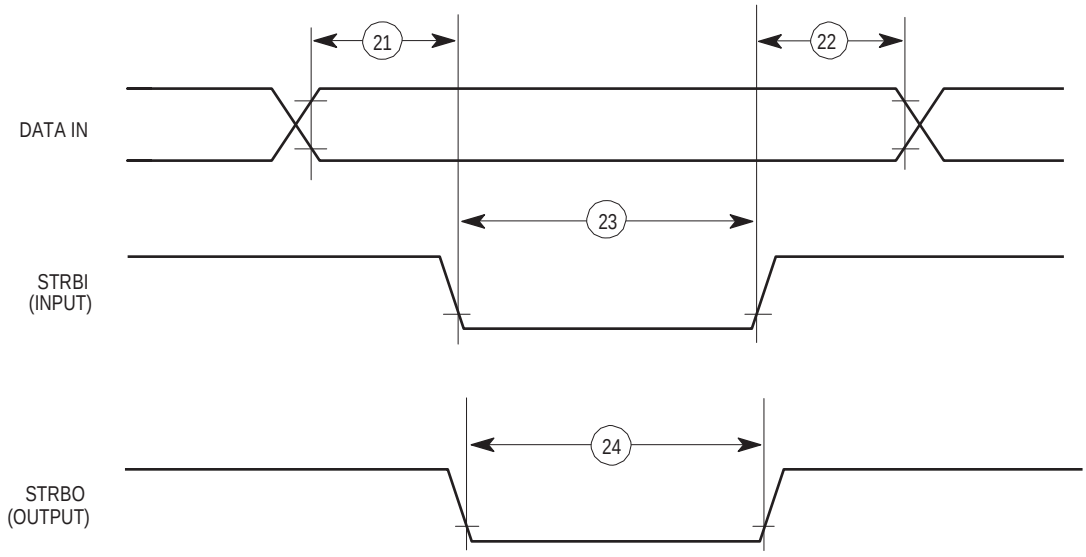

Figure 43. PIP Tx (Pulse Mode)

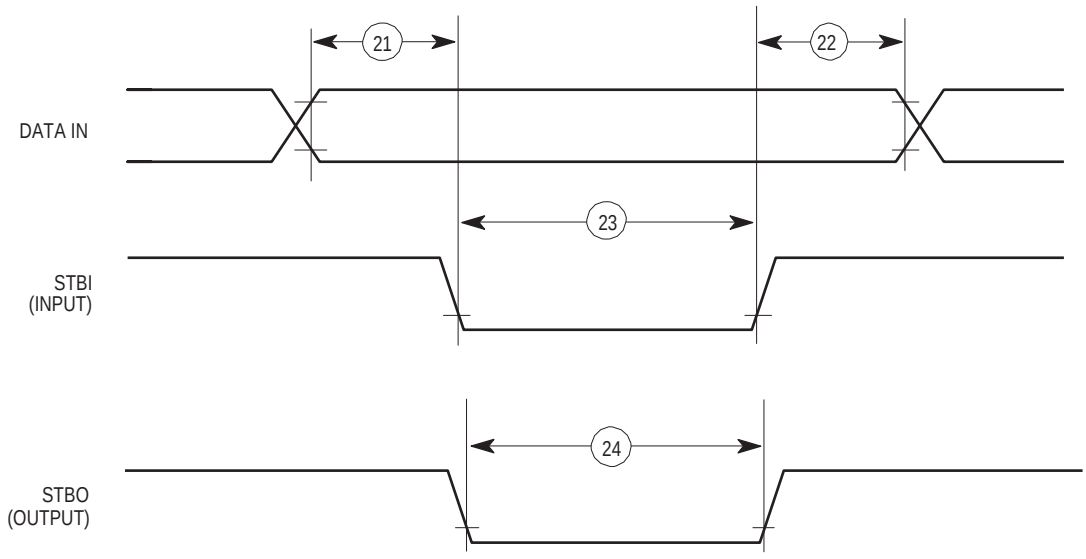

Figure 44. PIP Tx (Pulse Mode)

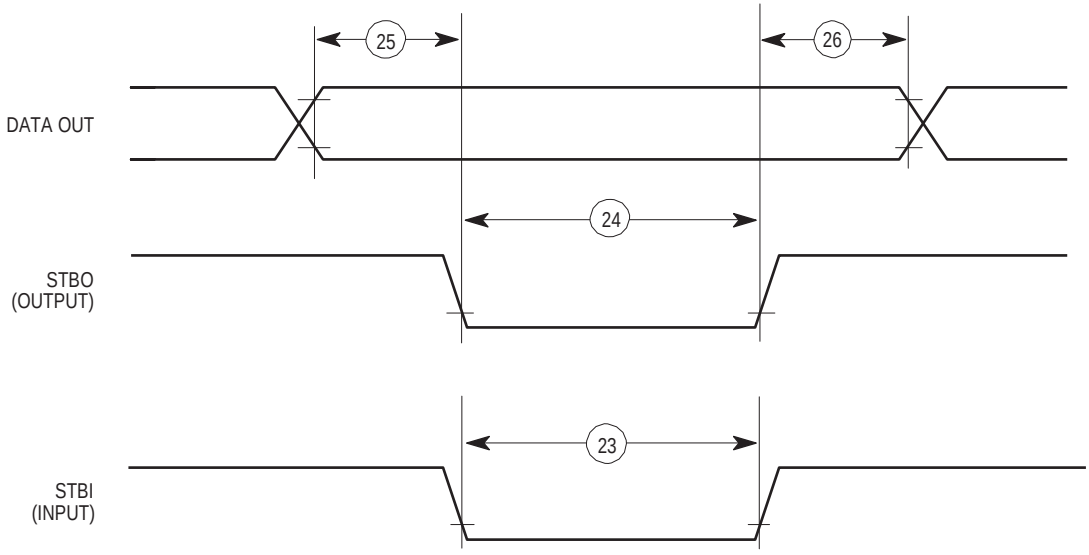

Figure 45. Parallel I/O Data-in/Data-out Timing Diagram

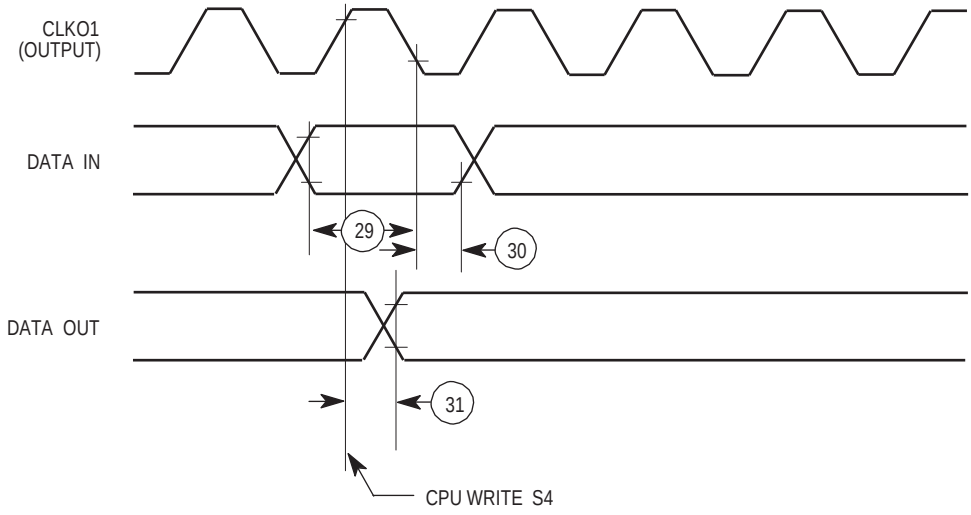

Interrupt Controller AC Electrical Specifications

GND = 0 Vdc, T_C = -55 to +125°C.The electrical specifications in this document are preliminary. (See Figure 46 and Figure 47).

Number	Characteristic	25.0 MHz Min	25.0 MHz Max	33.34 MHz Min	33.34 MHz Max	Unit
35	Port C Interrupt Pulse Width Low (Edge Triggered Mode)	70	-	55	-	ns
36	Minimum Time Between Active Edges Port C	70	-	55	-	clk
37	Clock High to $\overline{TOUT}$ Valid (Slave Mode)	-	20	-	17	ns
38	Clock High to $\overline{RQOUT}$ Valid (Slave Mode)	-	20	-	17	ns

Figure 46. Interrupts Timing Diagram

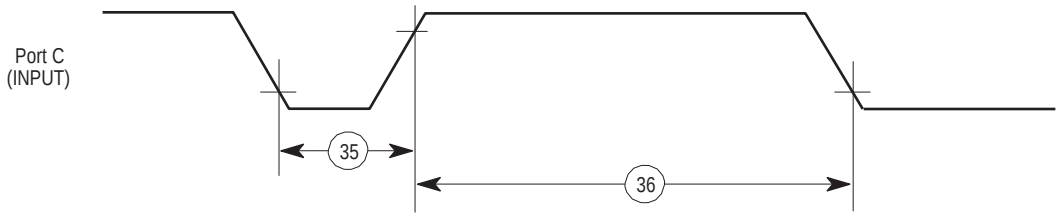

Figure 47. Slave Mode: Interrupts Timing Diagram

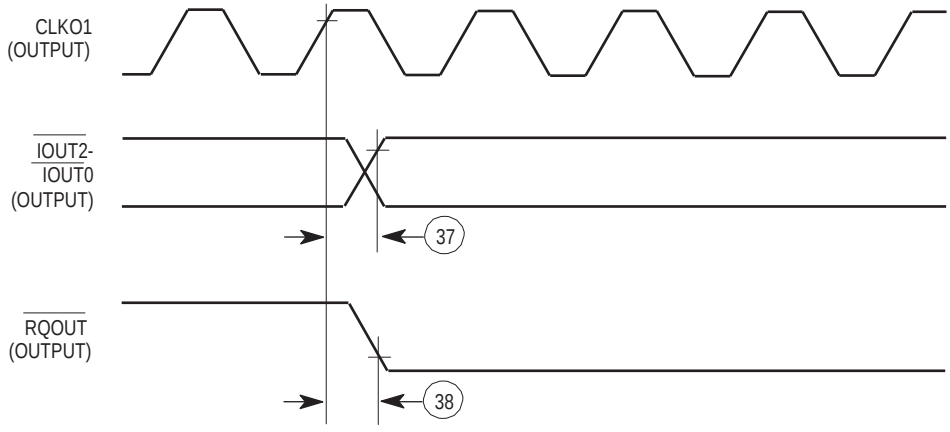

BAUD Rate Generator AC Electrical Specifications

GND = 0 V_{DC}, T_C = -55 to +125°C.The electrical specifications in this document are preliminary (See Figure 48).

Number	Characteristic	25.0 MHz		33.34 MHz		Unit
		Min	Max	Min	Max	
50	BRGO Rise and Fall Time	-	10	-	7.5	ns
51	BRGO Duty Cycle	40	60	40	60	%
52	BRGO Cycle	40		30		ns

Figure 48. Baud Rate Generator Output Signals

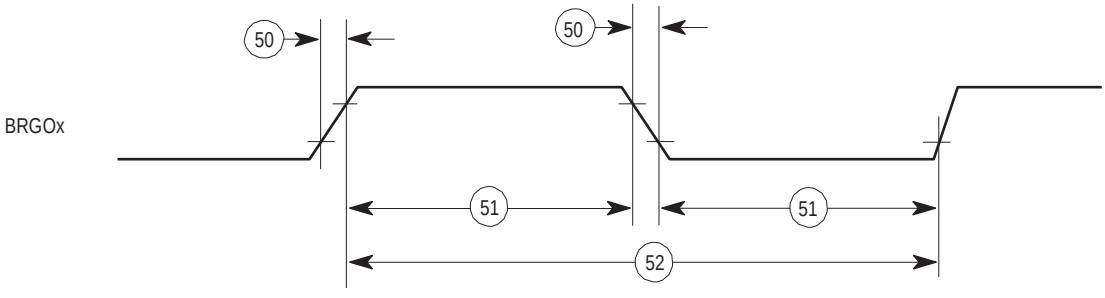

Timer Electrical Specifications

GND = 0 V_{DC}, T_C = -55 to +125°C. The electrical specifications in this document are preliminary (See Figure 49).

Number	Characteristic	Symbol	25.0 MHz		33.34 MHz		Unit
			Min	Max	Min	Max	
61	TIN/TGATE Rise and Fall Time	t_f	10	-	10	-	ns
62	TIN/TGATE Low Time	-	1	-	1	-	clk
63	TIN/TGATE High Time	-	2	-	2	-	clk
64	TIN/TGATE Cycle Time	-	3	-	3	-	clk
65	CLKO1 High to $\overline{TOUT}$ Valid	t_{TO}	3	25	3	22	ns

Figure 49. CPM General-purpose Timers

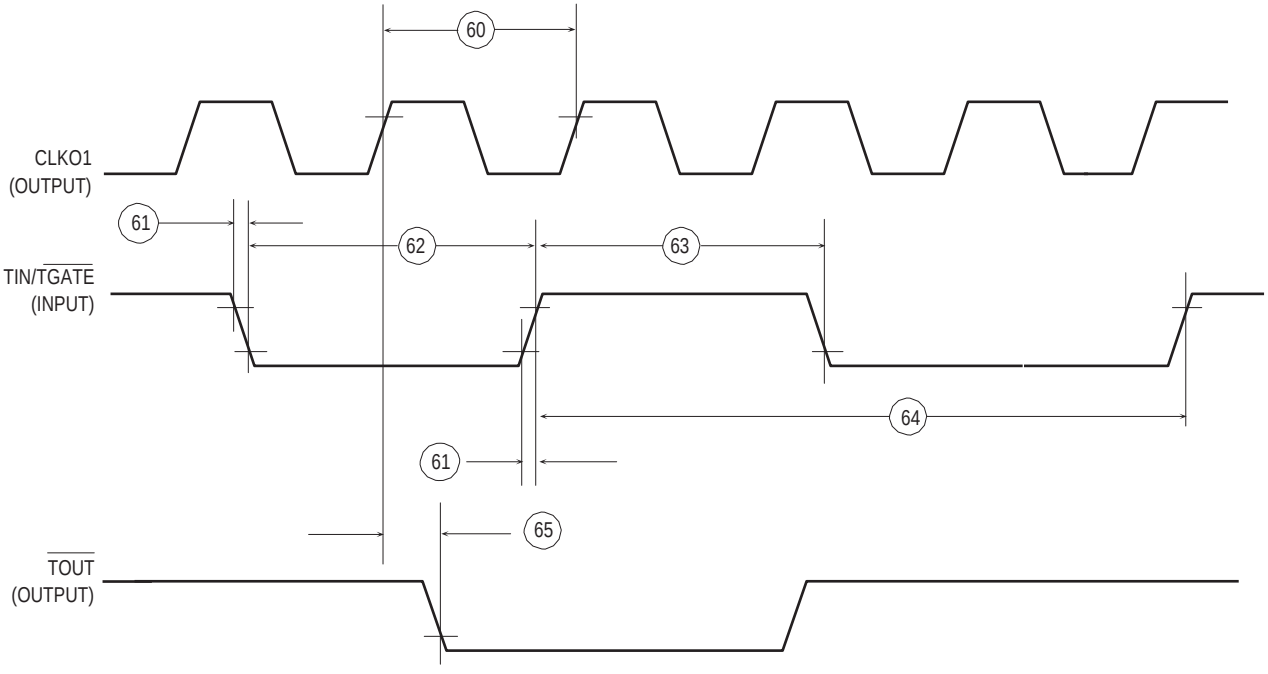

SI Electrical Specifications

GND = 0 $V_{DC,}$ T_C = -55 to +125°C.The electrical specifications in this document are preliminary (See Figure 50 to Figure 54).

Number	Characteristic	25.0 MHz		33.34 MHz		Unit
		Min	Max	Min	Max	
70[1][3]	L1RCLK, L1TCLK Frequency (DCS = 0)	-	10	-	10	MHz
71[1]	L1RCLK, L1TCLK Width Low (DCS = 0)	P+10	-	P+10	-	ns
71A[2]	L1RCLK, L1TCLK Width High (DCS = 0)	P+10	-	P+10	-	ns
72	L1TXD, L1ST(1-4), L1RQ, L1CLKO Rise/Fall Time	-	15	-	15	ns
73	L1RSYNC, L1TSYNC Valid to L1CLK Edge (SYNC Setup Time)	20	-	20	-	ns
74	L1CLK Edge to L1RSYNC, L1TSYNC Invalid (SYNC Hold Time)	35	-	35	-	ns
75	L1RSYNC, L1TSYNC Rise/Fall Time	-	15	-	15	ns
76	L1RXD Valid to L1CLK Edge (L1RXD Setup Time)	42	-	42	-	ns
77	L1CLK Edge to L1RXD Invalid (L1RXD Hold Time)	35	-	35	-	ns
78	L1CLK Edge to L1ST(1-4) Valid	10	45	10	45	ns
78A[4]	L1SYNC Valid to L1ST(1-4) Valid	10	45	10	45	ns
79	L1CLK Edge to L1ST(1-4) Invalid	10	45	10	45	ns
80	L1CLK Edge to L1TXD Valid	10	65	10	65	ns
80A[4]	L1TSYNC Valid to L1TXD Valid	10	65	10	65	ns
81	L1CLK Edge to L1TXD High Impedance	0	42	0	42	ns
82	L1RCLK, L1TCLK Frequency (DSC = 1)	-	12.5	-	16	MHz
83	L1RCLK, L1TCLK Width Low (DSC = 1)	P+10	-	P+10	-	ns
83A[2]	L1RCLK, L1TCLK Width High (DSC = 1)	P+10	-	P+10	-	ns
84	L1CLK Edge to L1CLKO Valid (DSC = 1)	-	30	-	30	ns
85[3]	L1RQ Valid Before Falling Edge of L1TSYNC	1	-	1	-	L1TCLK
86[3]	L1GR Setup Time	42	-	42	-	ns
87[3]	L1RG Hold Time	42	-	42	-	ns
88	L1CLK Edge to L1SYNC Valid (FSD = 00, CNT = 0000, BYT = 0, DSC = 0)	-	0	-	0	ns

Notes:
1. The ratio SyncCLK/L1RC LK must be greater than 2.5/1.
2. Where P = 1/CLKO1. Thus for a 25 MHz CLKO1 rate, P = 40 ns.
3. These specs are valid for IDL mode only.
4. The strobes and Txd on the first bit of the frame become valid after L1CLK edge or L1SYNC, whichever is later.

Figure 50. SI Receive Timing with Normal Clocking (DSC = 0)

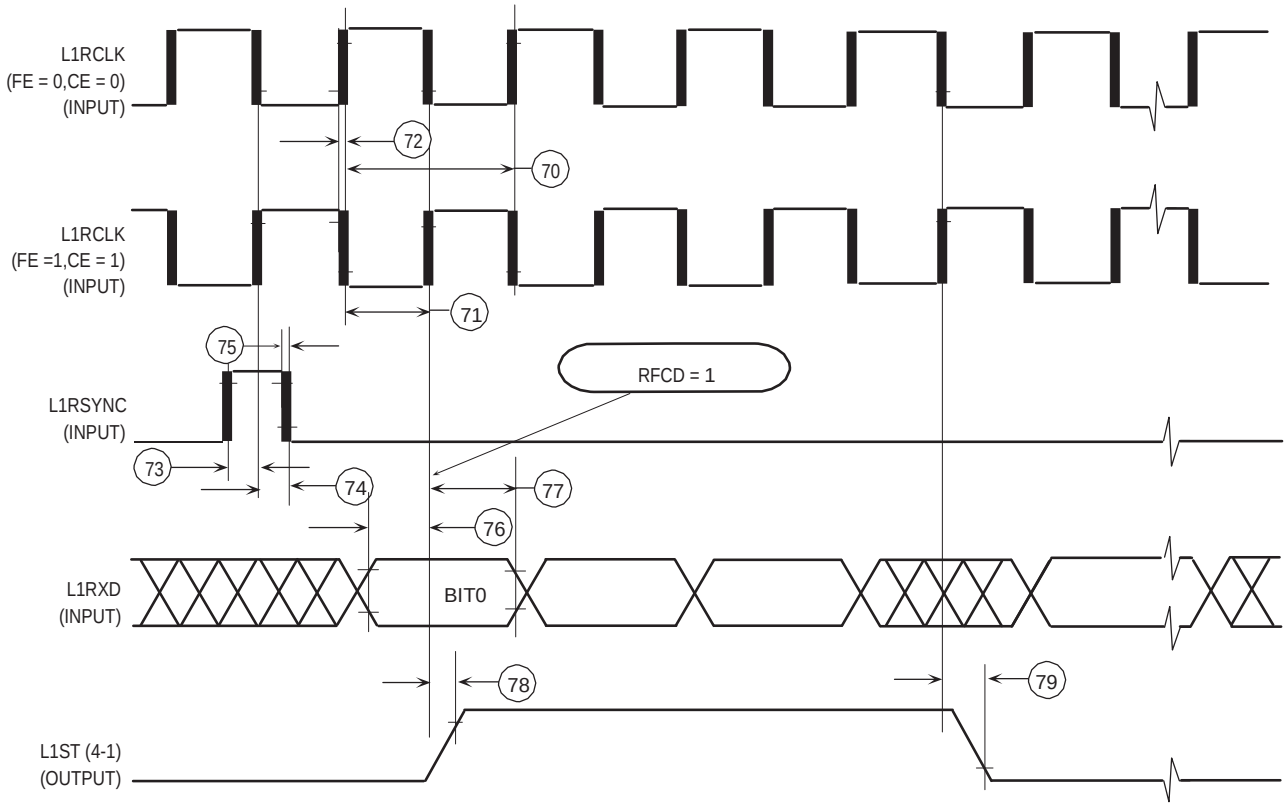

Figure 51. SI Receive Timing with Double Speed Clocking (DSC = 1)

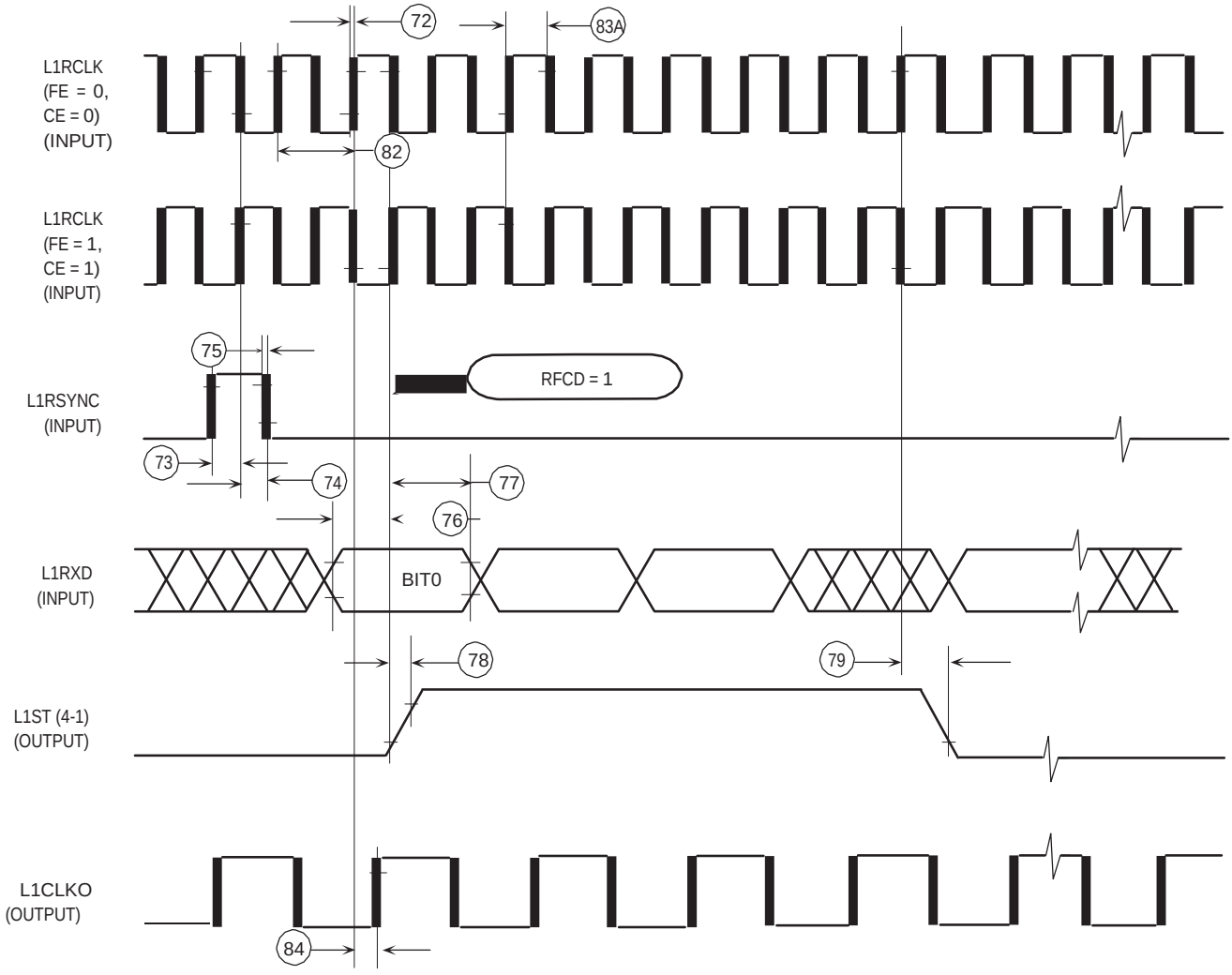

Figure 52. SI Transmit Timing with Normal Clocking (DSC = 0)

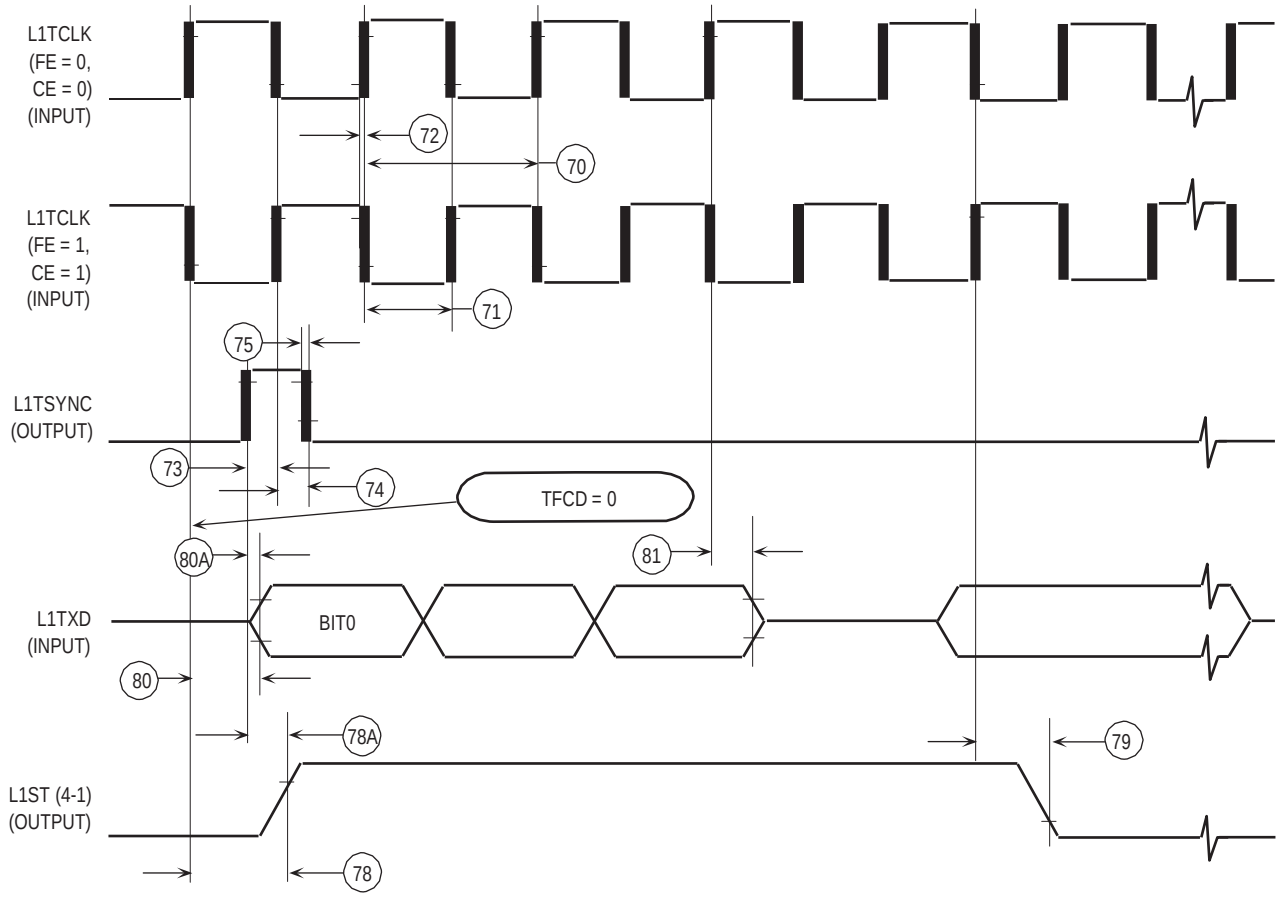

Figure 53. SI Transmit Timing with Double Speed Clocking (DSC = 1)

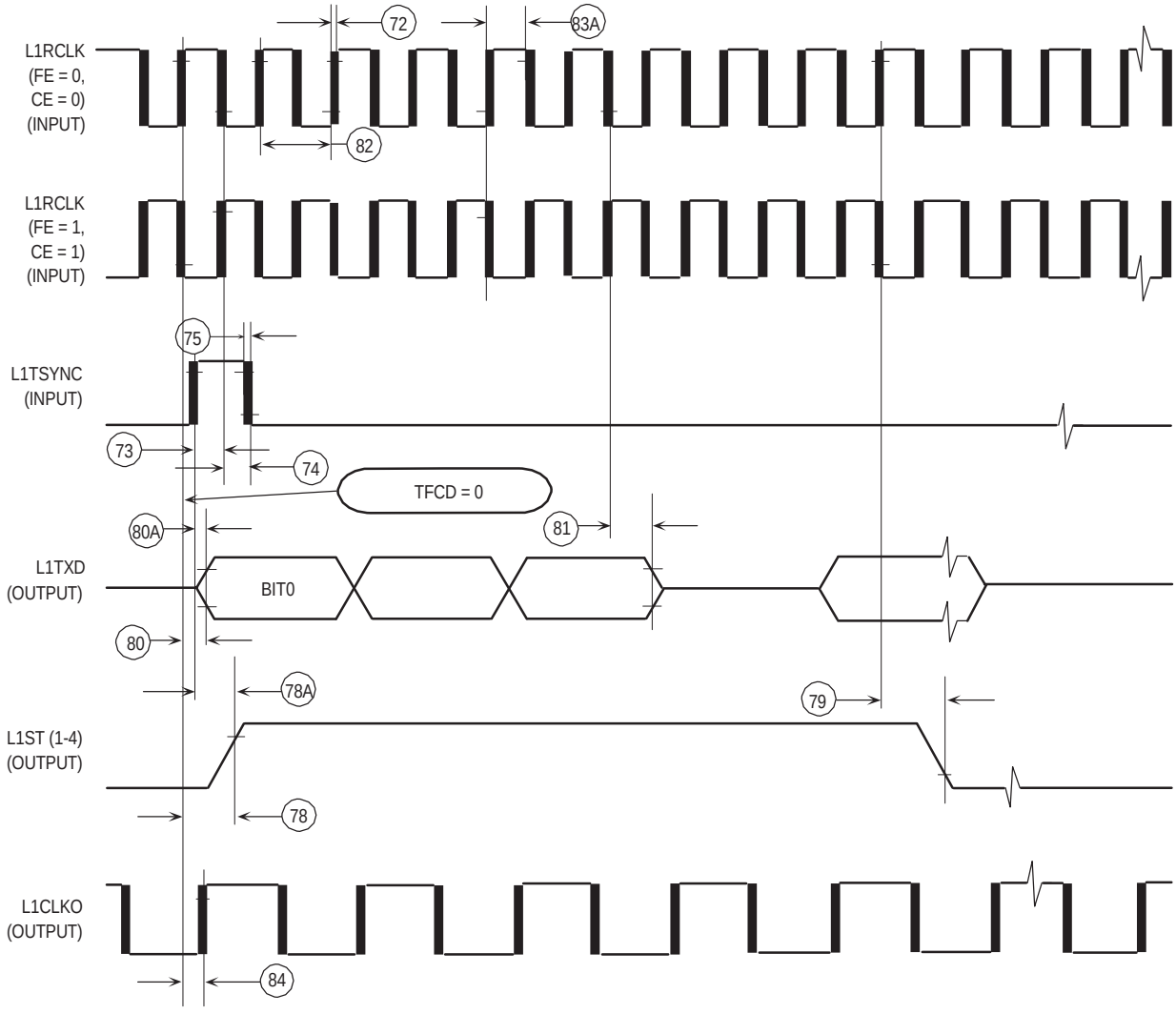

Figure 54. IDL Timing SI Transmit Timing with Double Speed Clocking (DSC = 1)

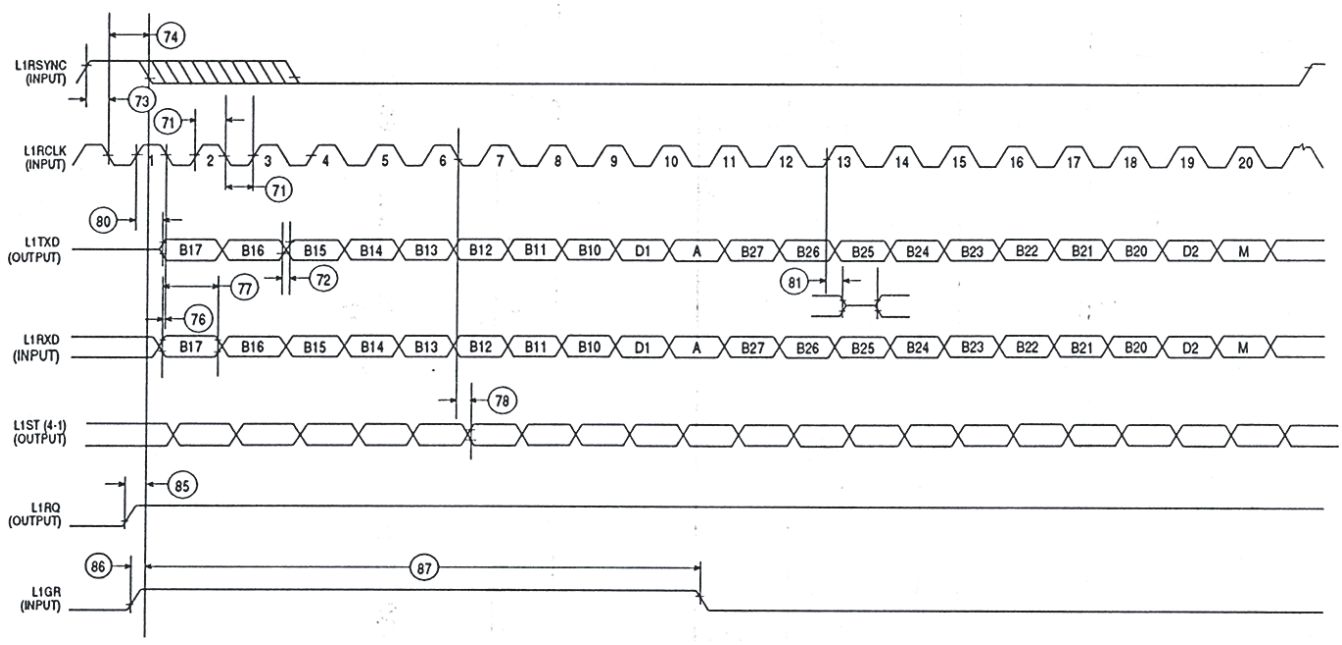

SCC in NMSI Mode-external Clock Electrical Specifications

GND = 0 V_{DC}, T_C = -55 to +125°C. The electrical specifications in this document are preliminary (See Figure 55 to Figure 57).

Number	Characteristic	25.0 MHz		33.34 MHz		Unit
		Min	Max	Min	Max	
100(1)	RCLK1 and TCLK1 Width High	CLKO1	-	CLKO1	-	
101	RCLK1 and TCLK1 Width Low	CLKO1 + 5 ns	-	CLKO1 + 5 ns	-	
102	RCLK1 and TCLK1 Rise/Fall Time	-	15	-	15	ns
103	TXD1 Active Delay (From TCLK1 Falling Edge)	0	50	0	50	ns
104	$\overline{RTS1}$ Active/Inactive Delay (From TCLK1 Falling Edge)	0	50	0	50	ns
105	$\overline{CTS1}$ Setup Time to TCLK1 Rising Edge	40	-	40	-	ns
106	RXD1 Setup Time to RCLK1 Rising Edge	40	-	40	-	ns
107(2)	RXD1 Hold Time from RCLK1 Rising Edge	0	-	0	-	ns
108	$\overline{CD1}$ Setup Time to RCLK1 Rising Edge	40	-	40	-	ns

Notes: 1. The ratio SyncCLK/RCLK1 and SyncCLK/TCLK1 must be greater or equal to 2.25/1.
2. Also applies to $\overline{CD}$ and $\overline{CTS}$ hold time when they are used as external sync signals.

SCC in NMSI Mode-internal Clock Electrical Specifications

GND = 0 V_{dc}, T_C = -55 to +125°C. The electrical specifications in this document are preliminary (See Figure 55 to Figure 57).

Number	Characteristic	25.0 MHz		33.34 MHz		Unit
		Min	Max	Min	Max	
100(1)	RCLK1 and TCLK1 Frequency	0	8.3	0	11	MHz
102	RCLK1 and TCLK1 Rise/Fall Time	-	-	-	-	ns
103	TXD1 Active Delay (From TCLK1 Falling Edge)	0	30	0	30	ns
104	$\overline{RTS1}$ Active/Inactive Delay (From TCLK1 Falling Edge)	0	30	40	-	ns
105	$\overline{CTS1}$ Setup Time to TCLK1 Rising Edge	40	-	40	-	ns
106	RXD1 Setup Time to RCLK1 Rising Edge	40	-	0	-	ns
107(2)	RXD1 Hold Time from RCLK1 Rising Edge	0	-	40	-	ns
108	$\overline{CD1}$ Setup Time to RCLK1 Rising Edge	40	-	0	30	ns

Notes: 1. The ratio SyncCLK/RCLK1 and SyncCLK/TCLK1 must be greater or equal to 3/1.
2. Also applies to $\overline{CD}$ and $\overline{CTS}$ hold time when they are used as external sync signals.

Figure 55. SCC NMSI Receive

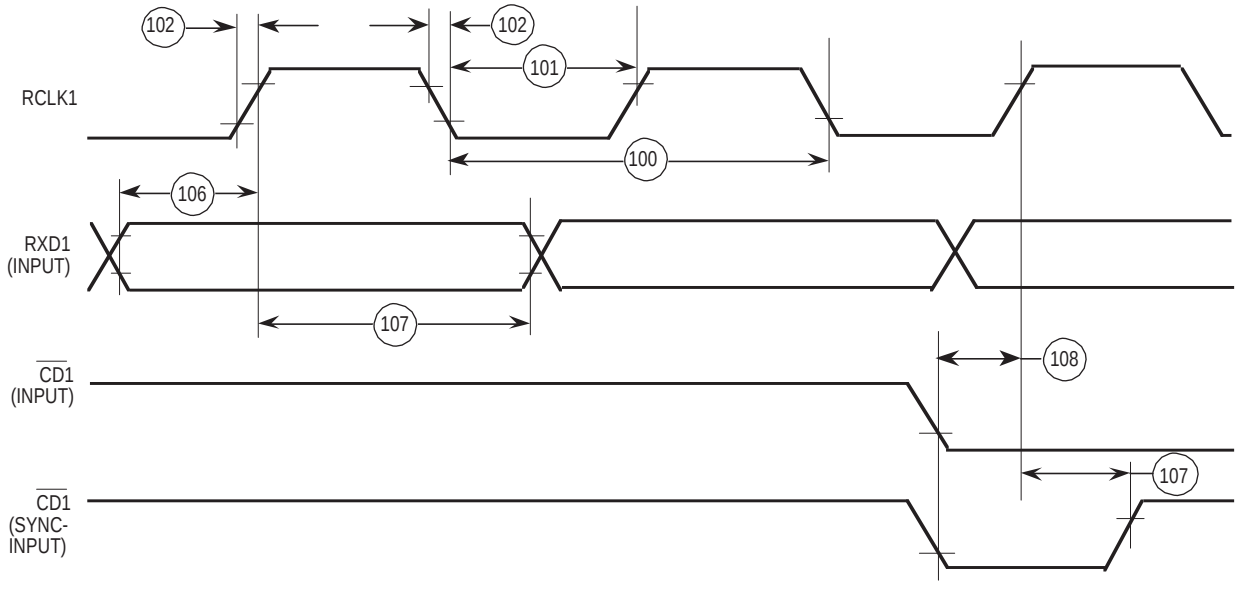

Figure 56. SCC NMSI Transmit

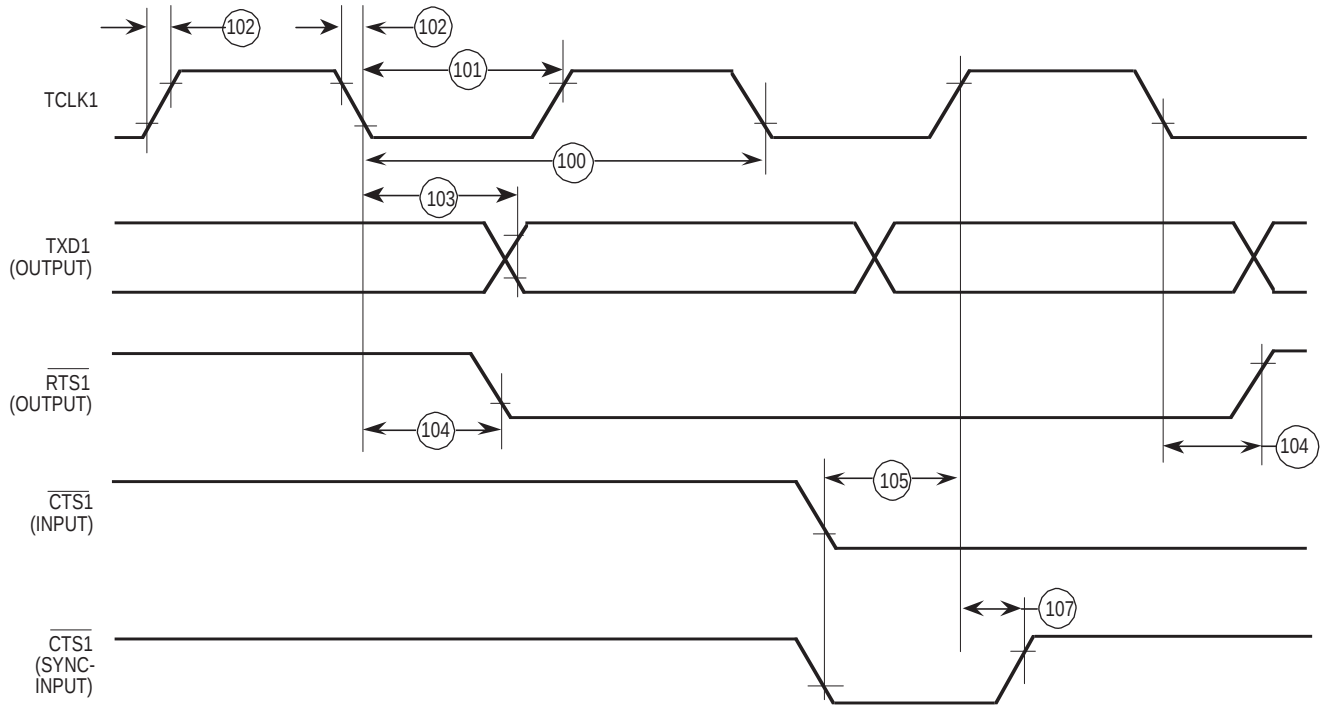

Figure 57. HDLC BUS Timing

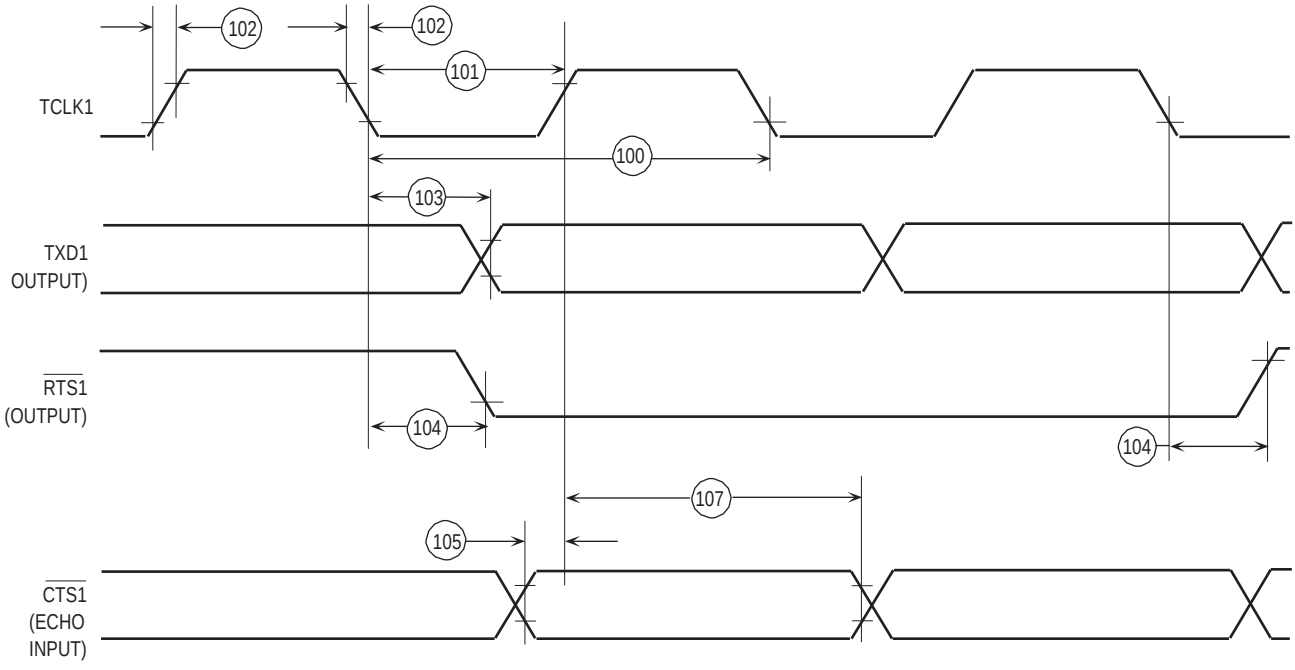

Ethernet Electrical Specifications

GND = 0 V_{dc}, T_C = -55 to +125°C. The electrical specifications in this document are preliminary (See Figure 58 to Figure 63).

Number	Characteristic	25.0 MHz		33.34 MHz		Unit
		Min	Max	Min	Max	
120	CLSN Width High	40	-	40	-	ns
121	RCLK1 Rise/Fall Time	-	15	-	15	ns
122	RCLK1 Width Low	CLKO1 + 5 ns	-	CLKO1 + 5 ns	-	
123(1)	RCLK1 Width High	CLKO1	-	CLKO1	-	
124	RXD1 Setup Time	20	-	20	-	ns
125	RXD1 Hold Time	5	-	5	-	ns
126	RENA Active Delay (from RCLK1 rising edge of the last data bit)	10	-	10	-	ns
127	RENA Width Low	100	-	100	-	ns
128	TCLK1 Rise/Fall Time	-	15	-	15	ns
129	TCLK1 Width Low	CLKO1 + 5 ns	-	CLKO1 + 5 ns	-	
130(1)	TCLK1 Width High	CLKO1	-	CLKO1	-	
131	TXD1 Active Delay (from TCLK1 rising edge)	10	50	10	50	ns
132	TXD1 Inactive Delay (from TCLK1 rising edge)	10	50	10	50	ns
133	TENA Active Delay (from TCLK1 rising edge)	10	50	10	50	ns
134	TENA Inactive Delay (from TCLK1 rising edge)	10	50	10	50	ns
135	RSTRT Active Delay (from TCLK1 falling edge)	10	50	10	50	ns
136	RSTRT Inactive Delay (from TCLK1 falling edge)	10	50	10	50	ns
137	RRJCT Width Low	1	-	1	-	CLKO1
138(2)	CLKO1 Low to $\overline{\text{SDACK}}$ Asserted	-	20	-	20	ns
139(2)	CLKO1 Low to $\overline{\text{SDACK}}$ Negated	-	20	-	20	ns

Notes: 1. SyncCLK/RCLK1 and SyncCLK/TCLK1 must be greater or equal to 2.25/1
2. $\overline{\text{SDACK}}$ is asserted whenever the SDMA writes the incoming frame DA into memory.

Figure 58. Ethernet Collision Timing

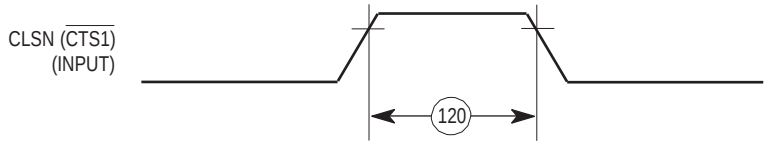

Figure 59. Ethernet Receive Timing

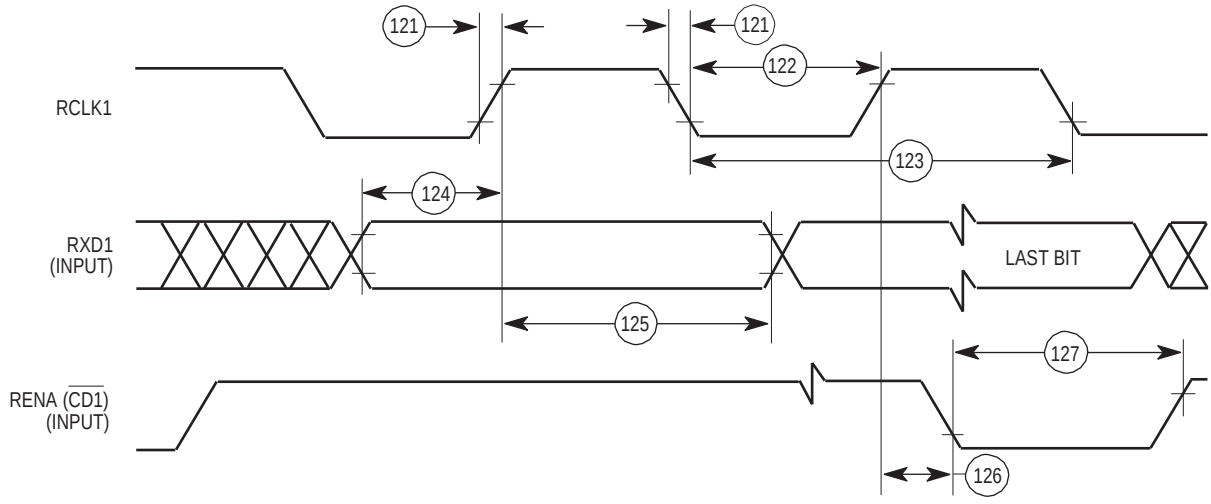

Figure 60. Ethernet Transmit Timing

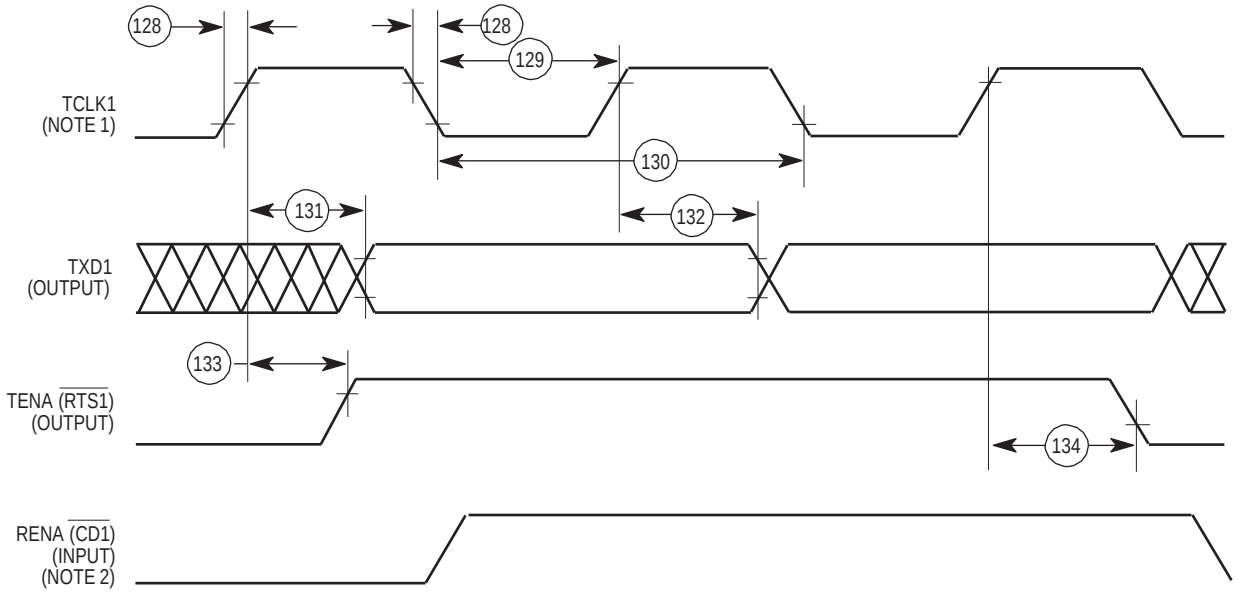

Notes: 1. Transmit clock invert (TCI) bit in GSMR is set.
2. If RENA is deasserted before TENA, or RENA is not asserted at all during transit, then CSL bit is set in the buffer descriptor at the end of frame transmission.

Figure 61. CAM Interface Receive Start Timing

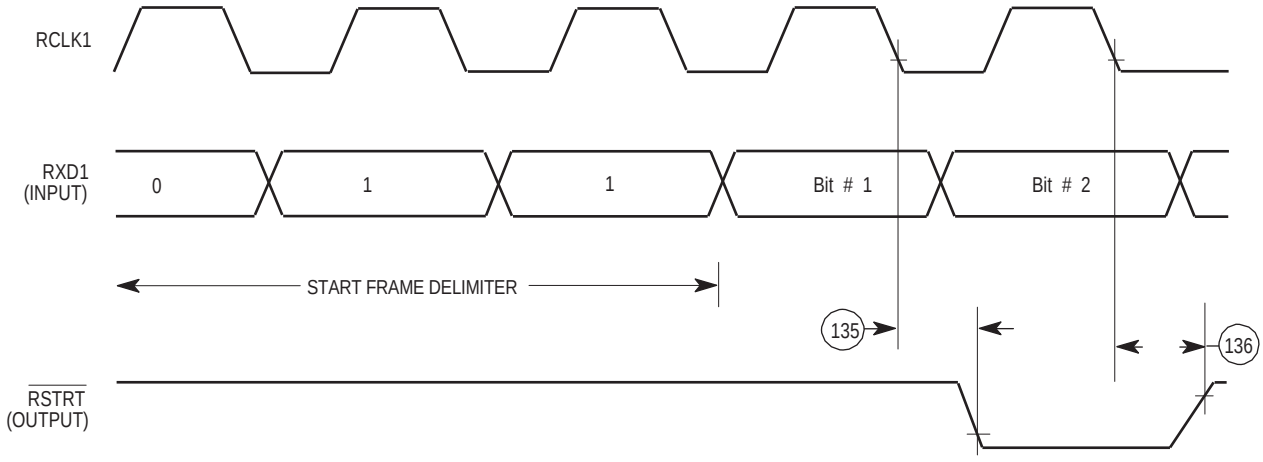

Note: Valid for the ethernet protocol only.

Figure 62. CAM Interface Reject Timing

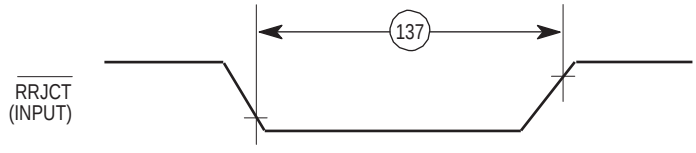

Note: Valid for the ethernet protocol only.

Figure 63. $\overline{\text{SDACK}}$ Timing Diagram

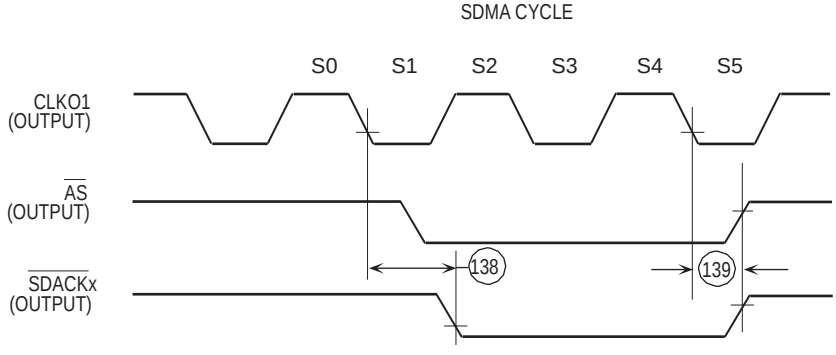

Note: $\overline{\text{SDACKx}}$ is asserted when the SDMA writes the received Ethernet frame into memory.

SMC Transparent Mode Electrical Specifications

GND = 0 V_{DC}, T_C = -55 to +125°C. The electrical specifications in this document are preliminary (See Figure 64).

Number	Characteristic	25.0 MHz		33.34 MHz		Unit
		Min	Max	Min	Max	
150(1)	SMCLK Clock Period	100	-	100	-	ns
151	SMCLK Width Low	50	-	50	-	ns
151A	SMCLK Width High	50	-	50	-	ns

SMC Transparent Mode Electrical Specifications

GND = 0 V_{DC}, T_C = -55 to +125°C. The electrical specifications in this document are preliminary (See Figure 64).

Number	Characteristic	25.0 MHz		33.34 MHz		Unit
		Min	Max	Min	Max	
152	SMCLK Rise/Fall Time	-	15	-	15	ns
153	SMTXD Active Delay (from SMCLK falling edge)	10	50	10	50	ns
154	SMRXD/SYNC1 Setup Time	20	-	20	-	ns
155	SMRXD/SYNC1 Hold Time	5	-	5	-	ns

Note: 1. The ratio SyncCLK/SMCLK must be greater or equal to 2/1.

Figure 64. SMC Transparent

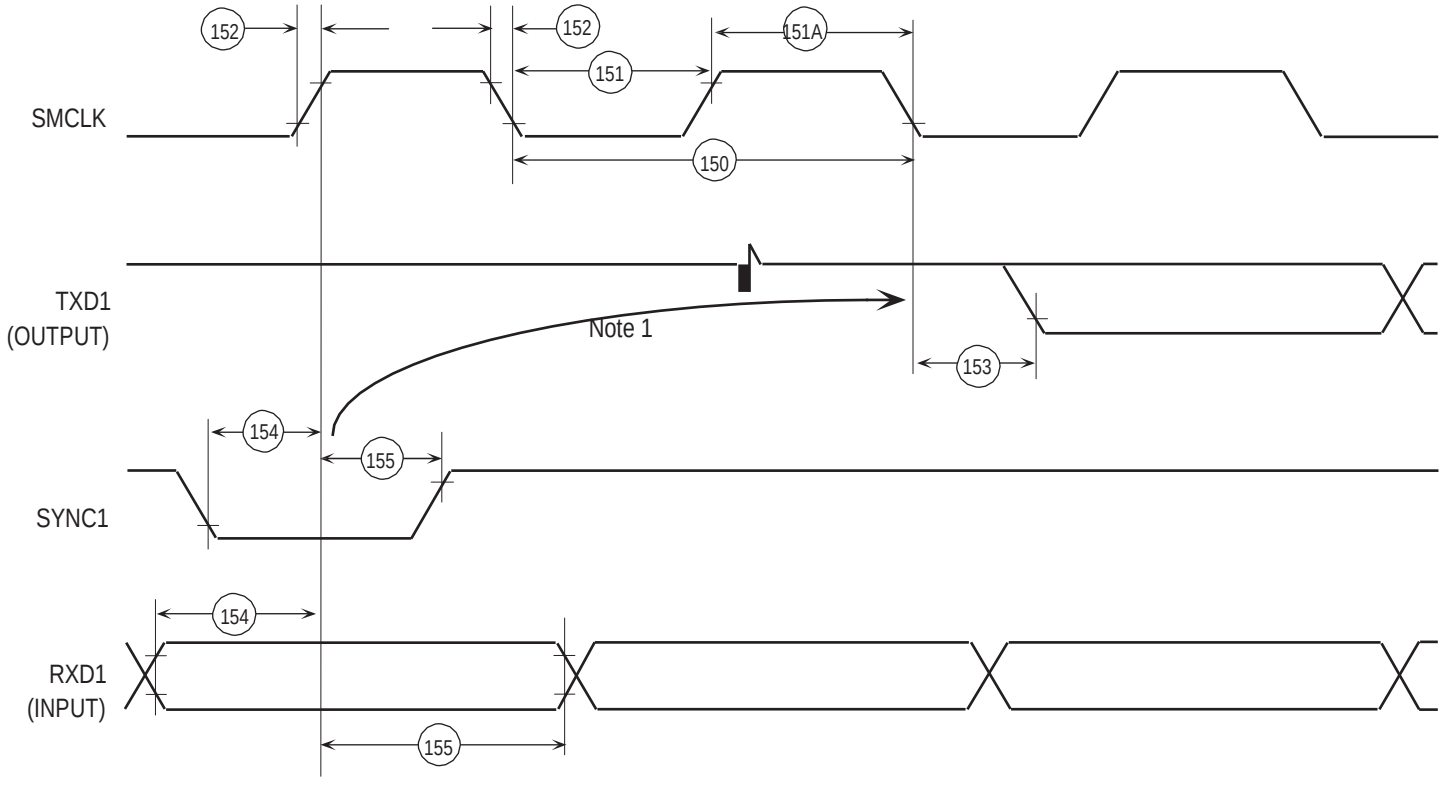

Note: This delay is equal to an integer number of “Character length” clocks.

SPI Master Electrical Specifications

GND = 0 Vdc, T_C = -55 to +125°C. The electrical specifications in this document are preliminary (See Figure 65 and Figure 66).

Number	Characteristic	25.0 MHz		33.34 MHz		Unit
		Min	Max	Min	Max	
160	Master Cycle Time	4	1024	4	1024	tcyc
161	Master Clock (SPICLK) High or Low Time	2	512	2	512	tcyc
162	Master Data Setup Time (Inputs)	50	-	50	-	ns
163	Master Data Hold Time (Inputs)	0	-	0	-	ns
164	Master Data Valid (after SPICLK Edge)	-	20	-	20	ns
165	Master Data Hold Time (Outputs)	0	-	0	-	ns
166	Rise Time: Output		15		15	ns
167	Fall Time: Output		15		15	ns

Figure 65. SPI Master (CP = 0)

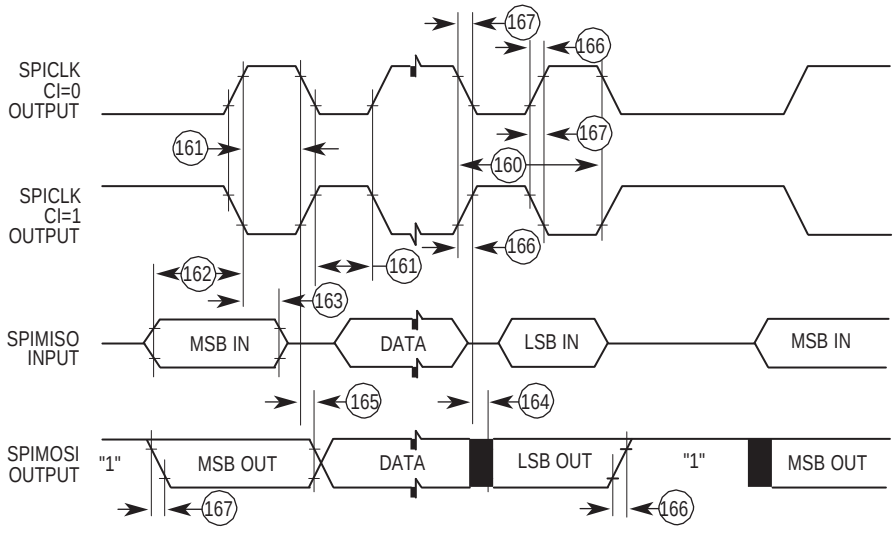

Figure 66. SPI Master (CP = 1)

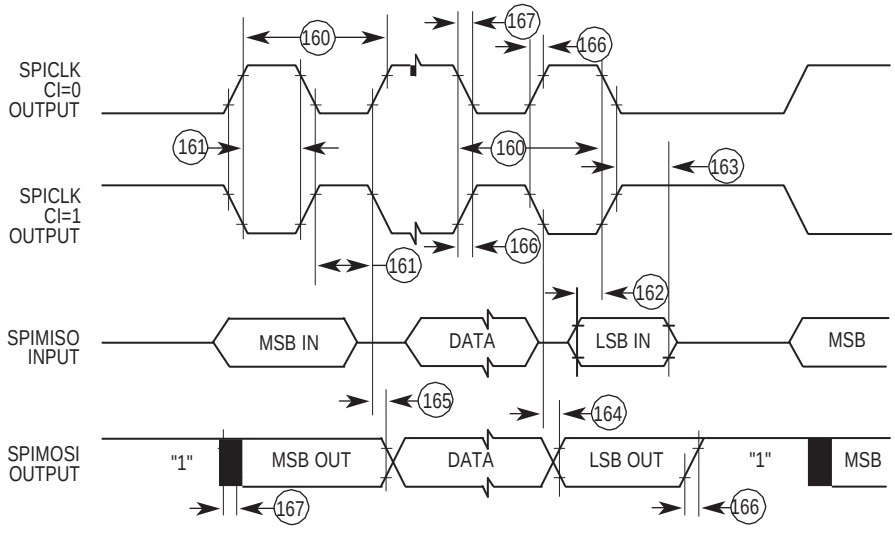

SPI Slave Electrical Specifications

GND = 0 V_{dc}, T_C = -55 to +125°C. The electrical specifications in this document are preliminary (See Figure 67 and Figure 68).

Number	Characteristic	25.0 MHz		33.34 MHz		Unit
		Min	Max	Min	Max	
170	Slave Cycle Time	2	-	2	-	tcyc
171	Slave Enable Lead Time	15		15		ns
172	Slave Enable Lag Time	15		15		ns
173	Slave Clock (SPICLK) High or Low Time	1	-	1	-	tcyc
174	Slave Sequential Transfer Delay (Does Not Require Deselect)	1		1		tcyc
175	Slave Data Setup Time (Inputs)	20	-	20	-	ns
176	Slave Data Hold Time (Inputs)	20	-	20	-	ns
177	Slave Access Time		50		50	ns
178	Slave SPIMISO Disable Time		50		50	ns
179	Slave Data Valid (after SPICLK Edge)	-	50	-	50	ns
180	Slave Data Hold Time (Outputs)	0	-	0	-	ns
181	Rise Time: Input		15		15	ns
182	Fall Time: Input		15		15	ns

Figure 67. SPI Slave (CP = 0)

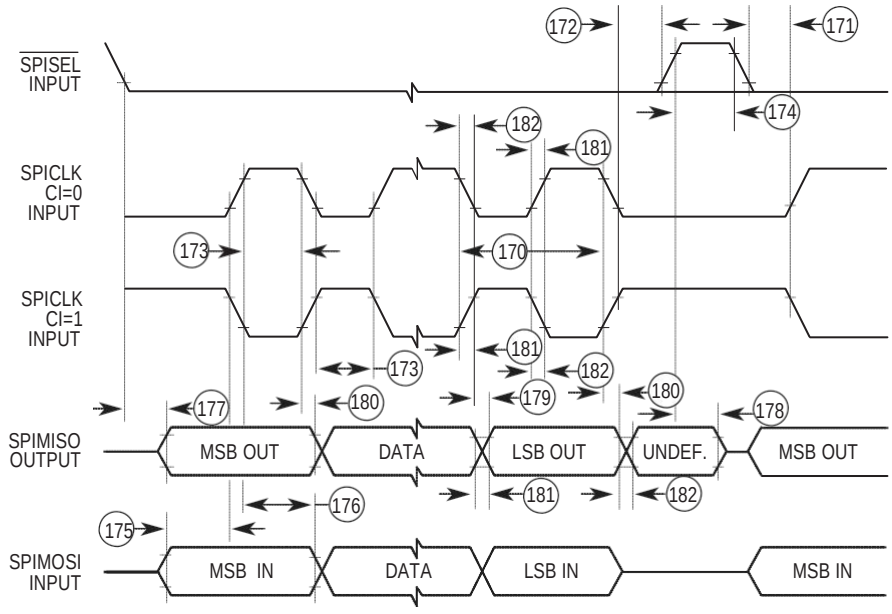

Figure 68. SPI Slave (CP = 1)

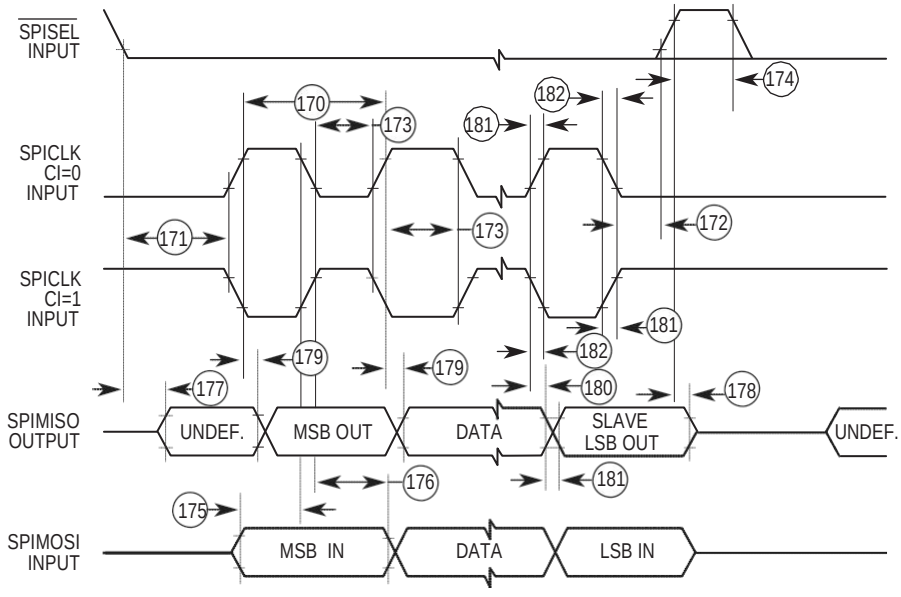

JTAG Electrical Specifications

GND = 0 Vdc, T_C = -55 to +125°C. The electrical specifications in this document are preliminary (See Figure 69 and Figure 72).

Number	Characteristic	25.0 MHz		33.34 MHz		Unit
		Min	Max	Min	Max	
	TCK Frequency of Operation	0	25	0	25	MHz
1	TCK Cycle Time in Crystal Mode	40	-	40	-	ns
2	TCK Clock Pulse Width Measured at 1.5V	18	-	18	-	ns
3	TCK rise and Fall Times	0	3	0	3	ns
6	Boundary Scan Input Data Setup Time	10	-	10	-	ns
7	Boundary Scan Input Data Hold Time	18	-	18	-	ns
8	TCK Low to Output Data Valid	0	30	0	30	ns
9	TCK Low to Output High Impedance	0	40	0	40	ns
10	TMS, TDI Data Setup Time	10	-	10	-	ns
11	TMS, TDI Data Hold Time	10	-	10	-	ns
12	TCK Low to TDO Data Valid	0	20	0	20	ns
13	TCK Low to TDO High Impedance	0	20	0	20	ns
14	$\overline{TRST}$ Assert Time	100	-	100	-	ns
15	$\overline{TRST}$ Setup Time to TCK Low	40	-	40	-	ns

Figure 69. Test Clock Input Timing Diagram

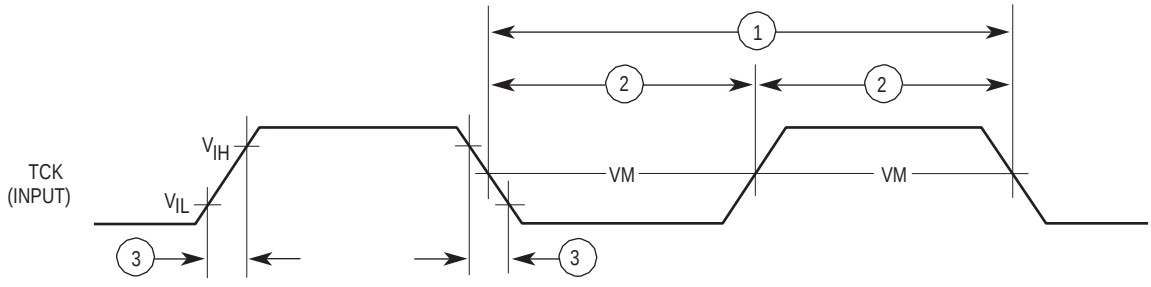

Figure 70. $\overline{TRST}$ Timing Diagram

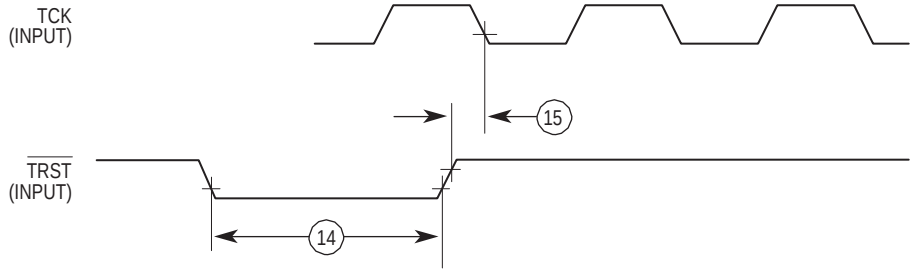

Figure 71. Boundary Scan (JTAG) Timing Diagram

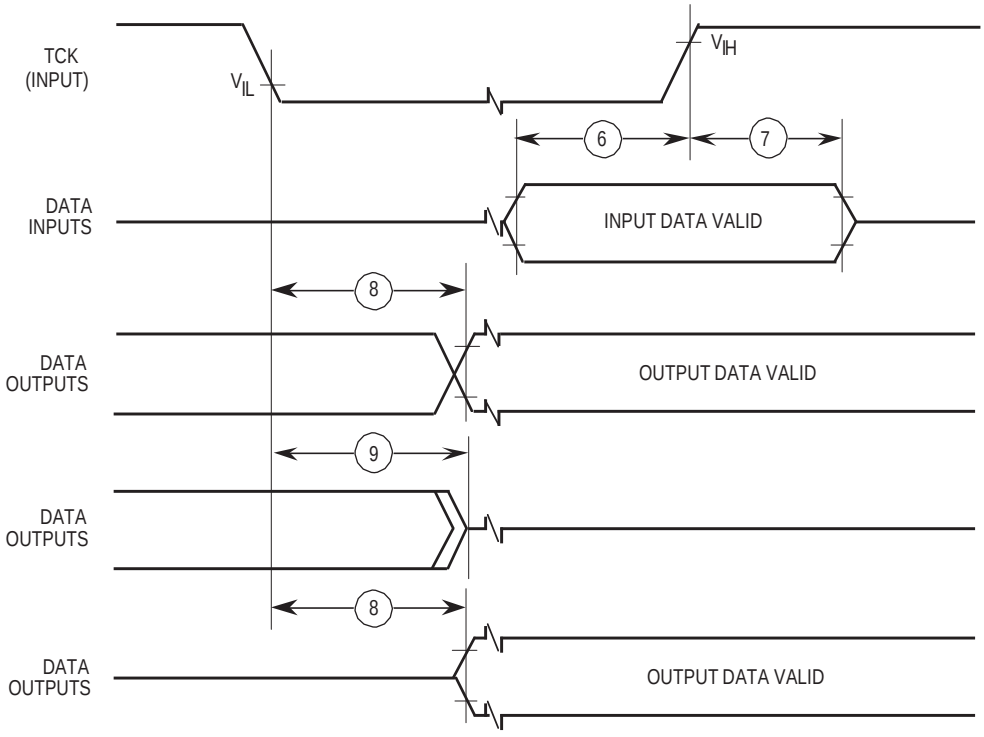

Figure 72. Test Access Port Timing Diagram

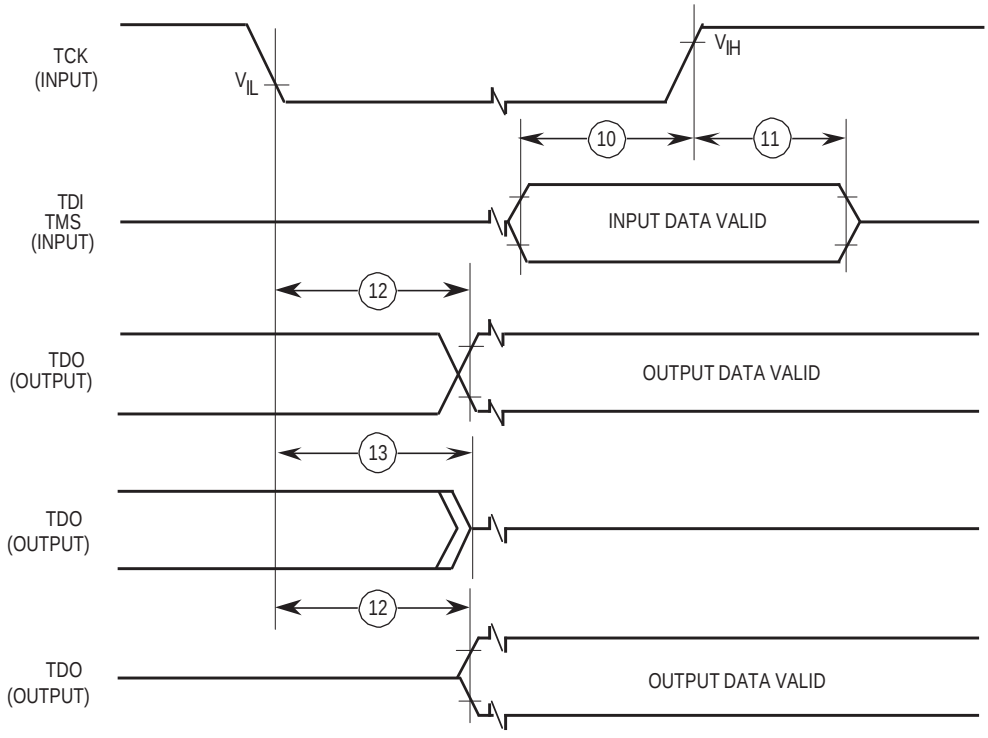

Functional Description

CPU32+ Core

The CPU32+ core is a CPU32 that has been modified to connect directly to the 32-bit IMB and apply the larger bus width. Although the original CPU32 core had a 32-bit internal data path and 32-bit arithmetic hardware, its interface to the IMB was 16 bits. The CPU32+ core can operate on 32-bit external operands with one bus cycle. This allows the CPU32+ core to fetch a long-word instruction in one bus cycle an to fetch two word-length instructions in one bus cycle, fillingthe internal instruction queue more quickly. The CPU32+ core can also read and write 32-bits of data in one bus cycle.

Although the CPU32+ instruction timings are improved, its instruction set is identical to that of the CPU32. It will also execute the entire 68000 instruction set. It contains the same background debug mode (BDM) features as the CPU32. No new compilers, assemblers or other software support tools need be implemented for the CPU32+; standard CPU32 tools can be used.

The CPU32+ delivers approximately 4.5 MIPS at 25 MHz, based on the standard (accepted) assumption that a 10-MHz 68000 delivers 1 VAX MIPS. If an application requires more performance, the CPU32+ can be disabled, allowing the rest of the QUICC to operate as an intelligent peripheral to a faster processor. The QUICC provides a special mode called TS68040 companion mode to allow it to conveniently interface to members of the TS68040 family. This two-chip solution provides a 22-MIPS performance at 25 MHz.

The CPU32+ also offers automatic byte alignment features that are not offered on the CPU32. These features allow 16- or 32-bit data to be read or written at an odd address. The CPU32+ automatically performs the number of bus cycles required.

System Integration Module (SIM60)

The SIM60 integrates general-purpose features that would be useful in almost any 32-bit processor system. The term “SIM60” is derived from the QUICC part number, TS68EN360. The SIM60 is an enhanced version of the SIM40 that exists on the TS68332 device.

First, new features, such as a DRAM controller and breakpoint logic, have been added. Second, the SIM40 was modified to support a 32-bit IMB as well as a 32-bit external system bus. Third, new configurations, such as slave mode and internal accesses by an external master, are supported.

Although the QUICC is always a 32-bit device internally, it may be configured to operate with a 16-bit data bus. Regardless of the choice of the system bus size, dynamic bus sizing is supported. Bus sizing allows 8-16-, and 32-bit peripherals and memory to exist in the 32-bit system bus mode and 8- and 16-bit peripherals and memory to exist in the 16-bit system bus mode.

Communications Processor Module (CPM)

The CPM contains features that allow the QUICC to excel in communications and control applications. These features may be divided into three sub-groups:

- Communications Processor (CP)
- Two IDMA Controllers
- Four General-purpose Timers

The CP provides the communication features of the QUICC. Included are a RISC processor, four SCCs, two SMCs, one SPI, 2.5K bytes of dual-port RAM, an interrupt controller, a time slot assigner, three parallel ports, a parallel interface port, four independent baud rate generators, and fourteen serial DMA channels to support the SCCs, SMCs, and SPI.

The IDMAs provide two channels of general-purpose DMA capability. They offer high-speed transfers, 32-bit data movement, buffer chaining, and independent request and acknowledge logic. The RISC controller may access the IDMA registers directly in the buffer chaining modes. The QUICC IDMAs are similar to, yet enhancements of, the one IDMA channel found on the TS68302.

The four general-purpose timers on the QUICC are functionally similar to the two general-purpose timers found on the TS68302. However, they offer some minor enhancements, such as the internal cascading of two timers to form a 32-bit timer. The QUICC also contains a periodic interval timer in the SIM60, bringing the total to five on-chip timers.

Ethernet on QUICC

The Ethernet protocol is available only on the Ethernet version of the QUICC called the TS68EN360. The non-Ethernet version of the QUICC is the MC68360. The term “QUICC” is the overall device name that denotes all versions of the device.

The TS68EN360 is a superset of the MC68360, having the additional option allowing Ethernet operation on any of the four SCCs. Due to performance reason not ass SCCs can be configured as Ethernet controller at the same time. The TS68EN360 is not restricted only to Ethernet operation. HDLC, UART, and other protocols may be used to allow dynamic switching between protocols. See Appendix A Serial Performance for available SCC performance.

When the MODE bits of the SCC GSMR select the Ethernet protocol, then that SCC performs the full set of IEEE 802.3/Ethernet CSMA/CD media access control and channel interface functions (see Figure 73).

Figure 73. Ethernet Block Diagram

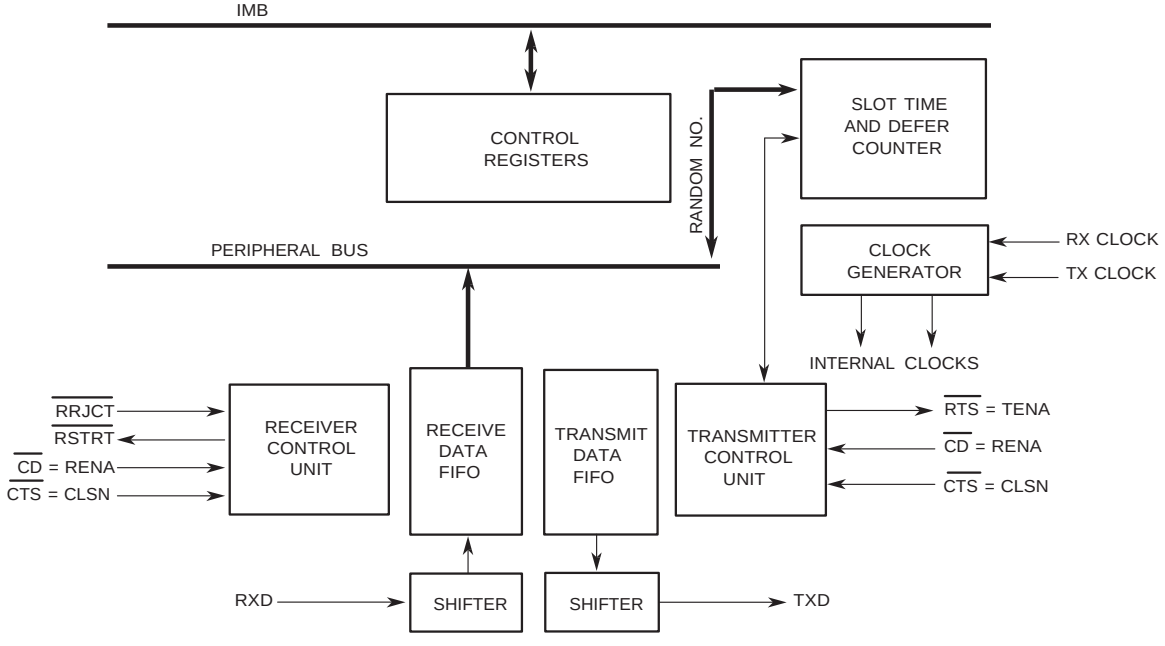

Upgrading Designs from the TS68302

Since the QUICC is a next-generation TS68302, many designers currently using the TS68302 may wish to use the QUICC in a follow-on design. The following paragraphs briefly discuss this endeavor in terms of architectural approach, hardware issues, and software issues.

Architectural Approach

The QUICC is the logical extension of the TS86302, but the overall architecture and philosophy of the TS86302 design remains intact in the QUICC. The QUICC keeps the best features of the TS86302, while making the changes required to provide for the increased flexibility, integration, and performance requested by customers. Because the CPM is probably the most difficult module to learn, anyone who has used the TS86302 can easily become familiar with the QUICC since the CPM architectural approach remains intact.

The most significant architectural change made on the QUICC was the translation of the design into the standard 68300 family IMB architecture, resulting in a faster CPU and different system integration features.

Although the features of the SIM60 do not exactly correspond to those of the TS86302 SIM, they are very similar.

Because of the similarity of the QUICC SIM60 and CPU to other members of the 68300 family, such as the TS68332, previous usersof these devices wil be comfortable with these same features on the QUICC.

Hardware Compatibility Issues

The following list summarizes the hardware differences between the TS86302 and the QUICC:

- Pinout – The pinout is not the same. The QUICC has 240 pins; the TS86302 has 132 pins.
- Package – Both devices offer PGA and PQFP packages. However, the QUICC QFP package has a 20-mil pitch; whereas, the TS86302 QFP package has a 25-mil pitch.
- System Bus – The system bus signals now look like those of the TS68020 as opposed to those of the 68000. It is still possible to interface 68000 peripherals to the QUICC, utilizing the same techniques used to interface them to a TS68020.
- System Bus in Slave Mode – A number of QUICC pins take on new functionality in slave mode to support an external TS68EC040. On the TS68302, the pin names generally remained the same in slave mode.
- Peripheral Timing – The external timings of the peripherals (SCCs, timers, etc.) are very similar (if not identical) to corresponding peripherals on the TS68302.
- Pin Assignments – The assignment of peripheral functions to I/O pins is different in several ways. First, the QUICC contains more general-purpose parallel I/O pins than the TS68302. However, the QUICC offers many more functions than even a 240-pin package would normally allow, resulting in more multifunctional pins than the TS68302.

Software Compatibility Issues

The following list summarizes the major software differences between the TS68302 and the QUICC:

- Since the CPU32+ is a superset of the 68000 instruction set, all previously written code will run. However, if such code is accessing the TS68302 peripherals, it will require some modification.
- The QUICC contains an 8-Kbyte block of memory as opposed to a 4-Kbyte block on the TS68302. The register addresses within that memory map are different.
- The code used to initialize the system integration features of the TS68302 has to be modified to write the corresponding features on the QUICC SIM60.
- As much as possible, QUICC CPM features were made identical to those of the TS68302 CP. The most important benefit is that the code flow (if not the code itself) will port easily from the TS68302 to the QUICC. The nuances learned from the TS68302 will still be useful in the QUICC.
- Although the registers used to initialize the QUICC CPM are new (for example, the SCM on the TS68302 is replaced with the GSMR and PSMR on the QUICC), most registers retain their original purpose such as the SCC event, SCC mask, SCC status, and command registers. The parameter RAM of the SCCs is very similar, and most parameter RAM register names and usage are retained. More importantly, the basic structure of a buffer descriptor (BD) on the QUICC is identical to that of the TS68302, except for a few new bit functions that were added. (In a few cases, a bit in a BD status word had to be shifted.)
- When porting code from the TS68302 CP to the QUICC CPM, the software writer may find that the QUICC has new options to simplify what used to be a more code-intensive process. For specific examples, see the INIT TX AND RX PARAMETERS, GRACEFUL STOP TRANSMIT, and CLOSE BD commands.

Preparation for Delivery

Packaging

Microcircuits are prepared for delivery in accordance with MIL-PRF-38535 or Atmel standards.

Certificate of Compliance

Atmel offers a certificate of compliances with each shipment of parts, affirming the products are in compliance either with MIL-STD-883 or Atmel standard and guarantying the parameters not tested at temperature extremes for the entire temperature range.

Handling

MOS devices must be handled with certain precautions to avoid damage due to accumulation of static charge. Input protection devices have been designed in the chip to minimize the effect of this static buildup. However, the following handling practices are recommended:

a) Devices should be handled on benches with conductive and grounded surfaces.

b) Ground test equipment, tools and operator.

c) Do not handle devices by the leads.

d) Store devices in conductive foam or carriers.

e) Avoid use of plastic, rubber, or silk in MOS areas.

f) Maintain relative humidity above 50% if practical.

Package Mechanical Data

241-pin – PGA

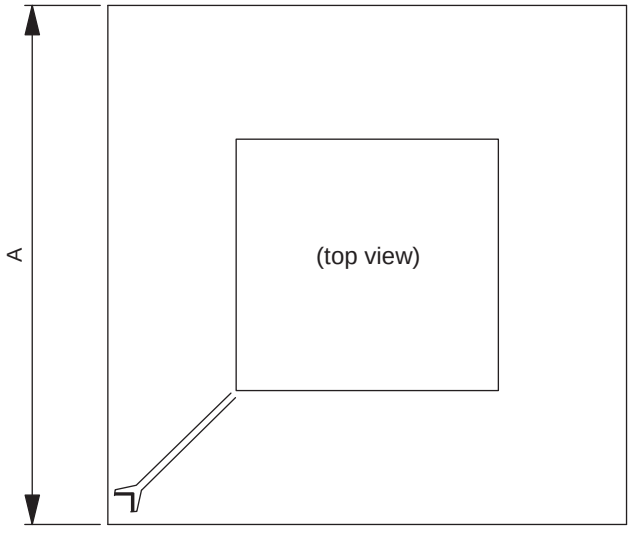

Dim	Inches		Millimeters	
	Min	Max	Min	Max
A	1.840	1.880	46.74	47.75
C	0.110	0.140	2.79	3.56
D	0.016	0.020	0.41	0.51
E	0.045	0.055	1.143	1.4
F	0.045	0.055	1.143	1.4
G	0.100 BASIC		2.54 BASIC	
K	0.150	0.170	3.81	4.32

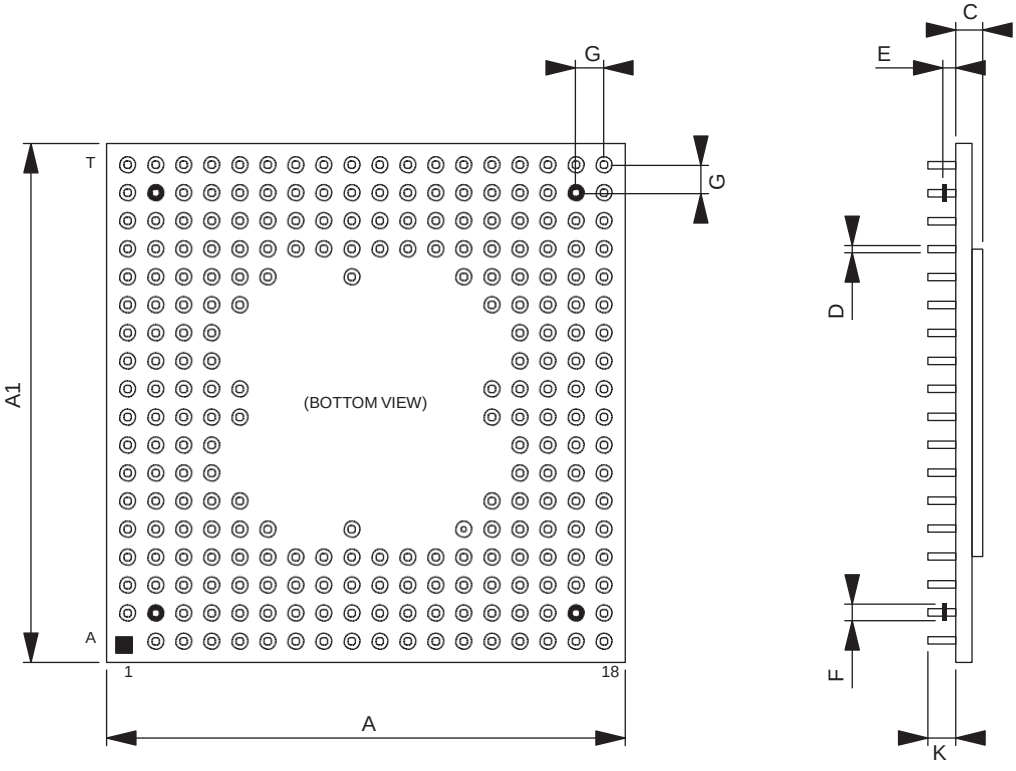

240-pin – CERQUAD

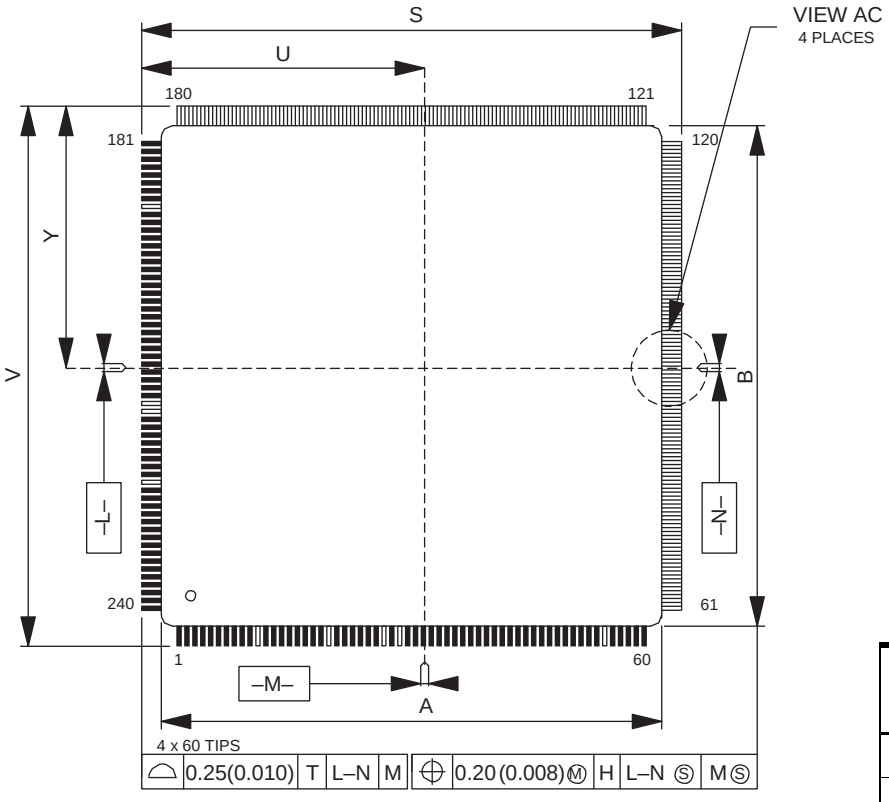

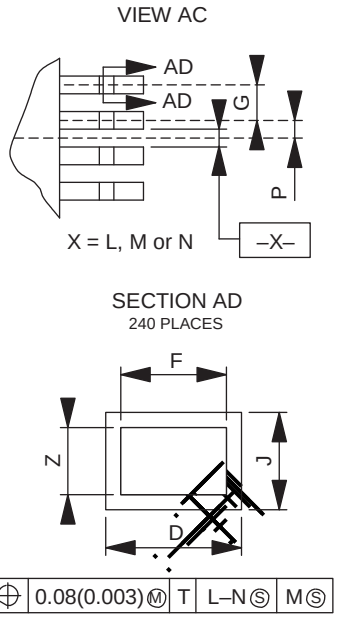

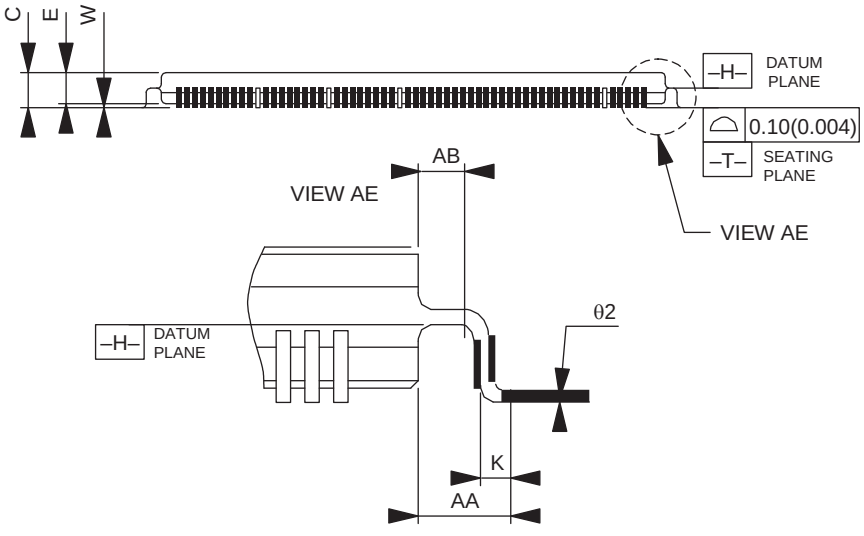

DIM	MILLIMETERS		INCHES	
	MIN	MAX	MIN	MAX
A	30.86	31.75	1.215	1.250
B	30.86	31.75	1.215	1.250
C	3.67	4.15	0.144	0.163
D	0.18	0.30	0.007	0.012
E	3.10	3.90	0.122	0.154
F	0.17	0.23	0.007	0.009
G	0.50 BSC		0.019 BSC	
J	0.13	0.175	0.005	0.007
K	0.45	0.55	0.018	0.021
P	0.25 BSC		0.010 BSC	
R	0.15 BSC		0.006 BSC	
S	34.41	34.75	1.355	1.37
U	17.30 BSC		0.681 BSC	
V	34.41	34.75	1.355	1.37
W	0.25	0.75	0.01	0.03
Y	17.30 BSC		0.681 BSC	
Z	0.12	0.13	0.005	0.005
AA	1.80 REF		0.071 REF	
AB	0.95 REF		0.037 REF	
θ2	1°	7°	1°	7°

Notes:
1. Dimensioning and tolerancing per ASME Y 14.5, 1994.
2. Controlling dimension: millimeter.
3. Datum plane -H- is located at bottom of lead and is coincident with the lead where the lead exits the ceramic body at the bottom of the partin line.
4. Datums -L-, -M- and -N- to be determined at datum plane -H-.
5. Dimensions S and V to be determined at seating plane -T-.
6. Dimensions A and B define maximum ceramic body dimensions including glass protrusion and top and bottom mismatch.

Ordering Information

Hi-REL Product

Commercial Atmel Part-Number	Norms	Package	Temperature Range Tc (°C)	Frequency (MHz)	Drawing Number
TS68EN360MRB/C25L	MIL-STD-883	PGA 241 Gold	-55/+125	25	-
TS68EN360MRB/C33L	MIL-STD-883	PGA 241 Gold	-55/+125	33	-
TS68EN360MR1B/C25L	MIL-STD-883	PGA 241 Tinned	-55/+125	25	-
TS68EN360MR1B/C33L	MIL-STD-883	PGA 241 Tinned	-55/+125	33	-
TS68EN360MAB/C25L	MIL-STD-883	CERQUAD 240	-55/+125	25	-
TS68EN360MAB/C33L	MIL-STD-883	CERQUAD 240	-55/+125	33	-
TS68EN360DES01MXCL	DSCC	PGA 241 Gold	-55/+125	25	5962-9760701MXC
TS68EN360DES02MXCL	DSCC	PGA 241 Gold	-55/+125	33	5962-9760702MXC
TS68EN360DES01MXAL	DSCC	PGA 241 Tinned	-55/+125	25	5962-9760701MXA
TS68EN360DES02MXAL	DSCC	PGA 241 Tinned	-55/+125	33	5962-9760702MXA
TS68EN360DES01MYAL	DSCC	CERQUAD 240	-55/+125	25	5962-9760701MYA
TS68EN360DES02MYAL	DSCC	CERQUAD 240	-55/+125	33	5962-9760702MYA

Standard Product

Commercial Atmel Part-Number	Norms	Package	Temperature Range Tc (°C)	Frequency (MHz)	Drawing Number
TS68EN360VR25L	Atmel Standard	PGA 241	-40/+85	25	Internal
TS68EN360MR25L	Atmel Standard	PGA 241	-55/+125	25	Internal
TS68EN360VA25L	Atmel Standard	CERQUAD 240	-40/+85	25	Internal
TS68EN360MA25L	Atmel Standard	CERQUAD 240	-55/+125	25	Internal
TS68EN360VR33L	Atmel Standard	PGA 241	-40/+85	33	Internal
TS68EN360MR33L	Atmel Standard	PGA 241	-55/+125	33	Internal
TS68EN360VA33L	Atmel Standard	CERQUAD 240	-40/+85	33	Internal
TS68EN360MA33L	Atmel Standard	CERQUAD 240	-55/+125	33	Internal

(TSX) TS68EN360 M R 1 B/C 25 X

Prototype version

Generic

Temperature range : (T_C)

M : -55°C, +125°C
V : -40°C, +110°C
C : 0°C, +70°C

R = Pin grid array 241 (gold)
A = CERQUAD 240 (tin)

Hirel lead finish :

_ = Gold (for PGA)
_ = Hot solder dip (for CERQUAD)
1 = Hot solder dip (for PGA - On request)

Revision level
L:

Operating frequency :

25 : 25 MHz
33 : 33 MHz

Screening :

___= Standard
B/C = MIL STD 883 Class B
B/T = According to MIL-STD883
D/T = Standard + Burn in

Atmel Headquarters

Corporate Headquarters
2325 Orchard Parkway
San Jose, CA 95131
TEL 1(408) 441-0311
FAX 1(408) 487-2600

Europe
Atmel SarL
Route des Arsenaux 41
Casa Postale 80
CH-1705 Fribourg
Switzerland
TEL (41) 26-426-5555
FAX (41) 26-426-5500

Asia
Atmel Asia, Ltd.
Room 1219
Chinachem Golden Plaza
77 Mody Road Tsimhatsui
East Kowloon
Hong Kong
TEL (852) 2721-9778
FAX (852) 2722-1369

Japan
Atmel Japan K.K.
9F, Tonetsu Shinkawa Bldg.
1-24-8 Shinkawa
Chuo-ku, Tokyo 104-0033
Japan
TEL (81) 3-3523-3551
FAX (81) 3-3523-7581

Atmel Operations

Memory
Atmel Corporate
2325 Orchard Parkway
San Jose, CA 95131
TEL 1(408) 436-4270
FAX 1(408) 436-4314

Microcontrollers
Atmel Corporate
2325 Orchard Parkway
San Jose, CA 95131
TEL 1(408) 436-4270
FAX 1(408) 436-4314

Atmel Nantes
La Chantrerie
BP 70602
44306 Nantes Cedex 3, France
TEL (33) 2-40-18-18-18
FAX (33) 2-40-18-19-60

ASIC/ASSP/Smart Cards
Atmel Rousset
Zone Industrielle
13106 Rousset Cedex, France
TEL (33) 4-42-53-60-00
FAX (33) 4-42-53-60-01

Atmel Colorado Springs
1150 East Cheyenne Mtn. Blvd.
Colorado Springs, CO 80906
TEL 1(719) 576-3300
FAX 1(719) 540-1759

Atmel Smart Card ICs
Scottish Enterprise Technology Park
Maxwell Building
East Kilbride G75 0QR, Scotland
TEL (44) 1355-803-000
FAX (44) 1355-242-743

RF/Automotive
Atmel Heilbronn
Theresienstrasse 2
Postfach 3535
74025 Heilbronn, Germany
TEL (49) 71-31-67-0
FAX (49) 71-31-67-2340

Atmel Colorado Springs
1150 East Cheyenne Mtn. Blvd.
Colorado Springs, CO 80906
TEL 1(719) 576-3300
FAX 1(719) 540-1759

Biometrics/Imaging/Hi-Rel MPU/ High Speed Converters/RF Datacom
Atmel Grenoble
Avenue de Rochepleine
BP 123
38521 Saint-Egreve Cedex, France
TEL (33) 4-76-58-30-00
FAX (33) 4-76-58-34-80

e-mail
literature@atmel.com

Web Site
http://www.atmel.com

© Atmel Corporation 2002.
Atmel Corporation makes no warranty for the use of its products, other than those expressly contained in the Company's standard warranty which is detailed in Atmel's Terms and Conditions located on the Company's web site. The Company assumes no responsibility for any errors which may appear in this document, reserves the right to change devices or specifications detailed herein at any time without notice, and does not make any commitment to update the information contained herein. No licenses to patents or other intellectual property of Atmel are granted by the Company in connection with the sale of Atmel products, expressly or by implication. Atmel's products are not authorized for use as critical components in life support devices or systems.

ATMEL® is the registered trademarks of Atmel.

Other terms and product names may be the trademarks of others.

2113A–HIREL–03/02 0M

Looking for pricing, stock, or lifecycle information?

Click below to explore more details on WIN SOURCE:

- View TS68EN360VA33L on WIN SOURCE
- Microchip Technology Information

Optimize Your Supply Chain with WIN SOURCE Solutions

- Global Sourcing Solution
- Obsolete Management
- Cost Control Management
- Shortage Management
- Alternative Solution
- Excess Inventory Management