Goldmax, 300 Series, Conformally Coated, C0G Dielectric, 25 – 250 VDC (Commercial Grade)

Overview

KEMET's Goldmax conformally coated radial leaded ceramic capacitors in C0G dielectric feature a 125°C maximum operating temperature. The Electronics Industries Alliance (EIA) characterizes C0G dielectric as a Class I "stable" material. Components of this classification are temperature compensating and are suited for resonant circuit applications or those where Q and stability of capacitance characteristics are required. C0G exhibits no change in capacitance with respect to time and voltage and boasts a negligible change in capacitance with reference to ambient temperature. Capacitance change is limited to ±30 ppm/°C from −55°C to +125°C.

These devices meets the flame test requirements outlined in UL Standard 94V–0.

Benefits

- Radial leaded form factor
- Conformally coated
- 0.100", 0.200", 0.250" and 0.400" lead spacing
- Operating temperature range of −55°C to +125°C
- Lead (Pb)-Free, RoHS and REACH compliant
- DC voltage ratings of 25 V, 50 V, 100 V, 200 V and 250 V
- Capacitance offerings ranging from 1.0 pF up to 0.47 µF

Ordering Information

C	320			C	153	J	5	G	5	T	A	7301
Ceramic	Style/Size			Specification/ Series	Capacitance Code (pF)	Capacitance Tolerance[1]	Rated Voltage (VDC)	Dielectric	Design	Lead Finish[2]	Failure Rate	Packaging (C-Spec)
	315 316 317 318 320 321 322 323	324 325 326 327 328 330 331 333	335 336 340 346 350 356	C = Standard	First two digits represent significant figures. Third digit specifies number of zeros.	D = ±0.5 pF F = ±1% G = ±2% J = ±5% K = ±10%	3 = 25 5 = 50 1 = 100 2 = 200 A = 250	G = C0G	5 = Multilayer	T = 100% Matte Sn H = SnPb (60/40)	A = N/A	See "Packaging C-Spec Ordering Options Table" below

[1] *Additional capacitance tolerance offerings may be available. Contact KEMET for details.*

[2] *Lead materials:*

Standard: 100% matte tin (Sn) with nickel (Ni) underplate and steel core ("T" designation).

Alternative 1: 60% tin (Sn)/40% lead (Pb) finish with copper-clad steel core ("H" designation).

Alternative 2: 60% tin (Sn)/40% lead (Pb) finish with 100% copper core (available with "H" designation code with C-Spec). Contact KEMET for C-Spec details.

© KEMET Electronics Corporation • One East Broward Boulevard
Fort Lauderdale, FL 33301 USA • 954-766-2800 • www.kemet.com

Benefits cont.

- Available capacitance Tolerances of ±0.5 pF, ±1%, ±2%, ±5%, and ±10%
- Extremely low ESR and ESL
- High thermal stability
- High ripple current capability
- No capacitance change with respect to applied rated DC voltage
- Negligible capacitance change with respect to temperature from −55°C to +125°C
- No capacitance decay with time
- Non-polar device, minimizing installation concerns
- 100% pure matte tin-plated lead finish allowing for excellent solderability
- SnPb-plated lead finish option available upon request (Sn60/Pb40)
- Encapsulation meets flamability standard UL 94V–0

Applications

Typical applications include critical timing, tuning, circuits requiring low loss, circuits with pulse, high current, decoupling, bypass, filtering, transient voltage suppression, blocking and energy storage.

Application Notes

These devices are not recommended for use in overmold applications and/or processes.

Packaging C-Spec Ordering Options Table

Packaging Type[1]	Packaging/Grade Ordering Code (C-Spec)
Bulk Bag	Not required (Blank)
12" Tape & Reel (16.0 ±0.5 mm lead length)	7301
12" Tape & Reel (18.0 mm minimum lead length)	7303 and TR
Ammo Pack (16.0 ±0.5 mm lead length)	7305
Ammo Pack (18.0 mm minimum lead length)	7317

[1] Default packaging is "Bulk Bag". An ordering code C-Spec is not required for "Bulk Bag" packaging. Bulk bag option is required for Size/Style C321 and C331.

[1] "Tape and Reel" packaging option is not available for Size/Style C321 and C331. For more information see "Packaging Quantities".

[1] "Ammo Pack" packaging option is not available for Size/Style C321, C331, C350, and C356. For more information see "Packaging Quantities".

[1] "Ammo Pack" and "Tape and Reel" packaging options have the same lead tape configuration. For more information see "Tape & Reel Packaging Information".

Dimensions – Inches (Millimeters)

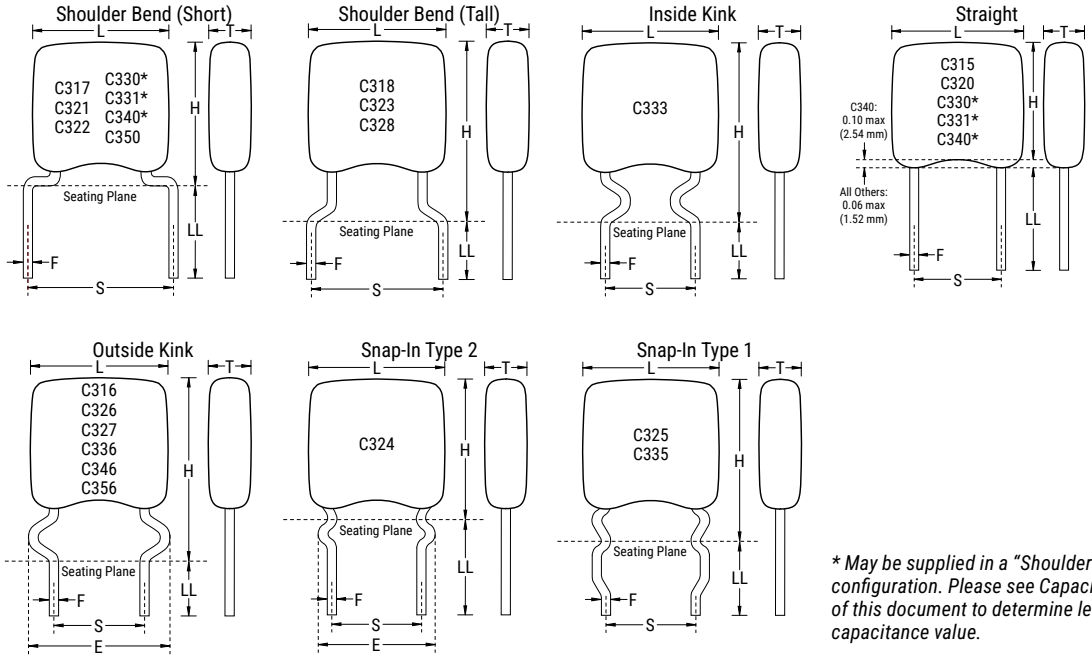

** May be supplied in a "Shoulder Bend" or "Straight" Lead configuration. Please see Capacitance Range Waterfall section of this document to determine lead configuration availability by capacitance value.*

Series	Style / Size	S Lead Spacing ±0.030 (0.78)	L Length Maximum	H Height Maximum	T Thickness Maximum	F Lead Diameter +0.004 (0.10), −0.001 (0.025)	LL Lead Length Minimum
C31X	315	0.100 (2.54)	0.150 (3.81)	0.120 (3.14)	0.100 (2.54)	0.020 (0.51)	0.276 (7.00)
	316		0.150 (3.81)	0.230 (5.84)	0.100 (2.54)		0.200 (5.08)
C32X	324		0.200 (5.08)	0.230 (5.84)	0.125 (3.18)[1]		0.276 (7.00)
	320		0.200 (5.08)	0.230 (5.84)	0.125 (3.18)[1]		0.276 (7.00)
	326		0.200 (5.08)	0.300 (7.62)	0.125 (3.18)[1]		0.200 (5.08)
C31X	317	0.200 (5.08)	0.150 (3.81)	0.200 (5.08)	0.100 (2.54)		0.276 (7.00)
	318		0.150 (3.81)	0.235 (5.97)	0.100 (2.54)		0.276 (7.00)
C32X	321	0.250 (6.35)	0.200 (5.08)	0.260 (6.60)	0.125 (3.18)[1]		0.276 (7.00)
	322	0.200 (5.08)	0.200 (5.08)	0.260 (6.60)	0.125 (3.18)[1]		0.276 (7.00)
	323		0.200 (5.08)	0.300 (7.62)	0.125 (3.18)[1]		0.276 (7.00)
	325		0.200 (5.08)	0.300 (7.62)	0.125 (3.18)[1]		0.276 (7.00)
	328		0.200 (5.08)	0.300 (7.62)	0.125 (3.18)[1]		0.276 (7.00)
	327		0.200 (5.08)	0.320 (8.13)	0.125 (3.18)[1]		0.200 (5.08)
C33X	330		0.280 (7.11)	0.360 (9.14)[2]	0.160 (4.07)		0.276 (7.00)
	331	0.250 (6.35)	0.300 (7.62)	0.360 (9.14)[2]	0.160 (4.07)		0.276 (7.00)
	333	0.200 (5.08)	0.280 (7.11)	0.400 (10.16)	0.160 (4.07)		0.276 (7.00)
	335		0.280 (7.11)	0.400 (10.16)	0.160 (4.07)		0.276 (7.00)
	336		0.280 (7.11)	0.400 (10.16)	0.160 (4.07)		0.200 (5.08)
C34X	340		0.290 (7.36)	0.400 (10.16)	0.160 (4.07)		0.276 (7.00)
	346		0.290 (7.36)	0.400 (10.16)	0.160 (4.07)		0.200 (5.08)
C35X	350	0.400 (10.16)	0.330 (8.38)	0.400 (10.16)	0.200 (5.08)	0.025 (0.64)	0.276 (7.00)
	356		0.330 (8.38)	0.400 (10.16)	0.200 (5.08)		0.200 (5.08)

[1] Thickness maximum (T) = 0.160" (4.07 mm) for capacitance values greater than or equal to 4.7 µF
[2] Height max. (H) = 0.400" (10.16 mm) for C330 & C331 with shoulder bend leads (see capacitance range waterfall table) .

Qualification/Certification

Commercial Grade products are subject to internal qualification. Details regarding test methods and conditions are referenced in Table 2, Performance & Reliability.

Environmental Compliance

Lead (Pb)-free, REACH and RoHS compliant without exemptions when ordered with a 100% tin (Sn) wire lead finish. Product ordered with tin/ lead (Sn60/Pb40) wire lead finish do not meet RoHS criteria.

Series	Termination Finish (Wire Lead)	RoHS Compliant	RoHS Exemption Code	REACH Compliant[1]	Halogen Free
300 (C3XX)	100% Matte Sn	Yes	n/a	Yes	Yes
	Sn60/Pb40	No	n/a	Yes	Yes

[1] REACH compliance indicates product does not contain Substance/s of Very High Concern (SVHC)

Electrical Parameters/Characteristics

Item	Parameters/Characteristics
Operating Temperature Range	−55°C to +125°C
Capacitance Change with Reference to +25°C and 0 VDC Applied (TCC)	±30 ppm/°C
Aging Rate (Maximum % Cap Loss/Decade Hour)	0%
Dielectric Withstanding Voltage	250% of rated voltage (5±1 second and charge/discharge not exceeding 50 mA at 25°C)
Dissipation Factor (DF) Maximum Limit at 25°C	0.1%
Insulation Resistance (IR) Limit at 25°C	1,000 megohm microfarads or 100 GΩ (Rated voltage applied for 120±5 seconds at 25°C)

To obtain IR limit, divide MΩ-μF value by the capacitance and compare to GΩ limit. Select the lower of the two limits.
Capacitance and dissipation factor (DF) measured under the following conditions:
1 MHz ±100 kHz and 1.0 V_{rms} ±0.2 V if capacitance ≤ 1,000 pF
1 kHz ±50 Hz and 1.0 V_{rms} ±0.2 V if capacitance > 1,000 pF
Note: When measuring capacitance it is important to ensure the set voltage level is held constant. The HP4284 and Agilent E4980 have a feature known as Automatic Level Control (ALC). The ALC feature should be switched to "ON."

Post Environmental Limits

High Temperature Life, Biased Humidity and Storage Life					
Style/Size	Rated DC Voltage	Capacitance Value	Dissipation Factor (Maximum %)	Capacitance Shift	Insulation Resistance
C0G	All	All	0.5	0.3% or ±0.25 pF	10% of Initial Limit

Table 1A – C31X Style/Size, Capacitance Range Waterfall

C315, C316, C317, C318 Style/Size (0.100" and 0.200" Lead Spacing)						
Rated Voltage (VDC)		**25**	**50**	**100**	**200**	**250**
Voltage Code		**3**	**5**	**1**	**2**	**A**
Capacitance	**Capacitance Tolerance**	**Capacitance Code (Available Capacitance)**				
1pF	D = ±0.5pF	109	109	109	109	109
1.1pF		119	119	119	119	119
1.2pF		129	129	129	129	129
1.3pF		139	139	139	139	139
1.5pF		159	159	159	159	159
1.6pF		169	169	169	169	169
1.8pF		189	189	189	189	189
2.0pF		209	209	209	209	209
2.2pF		229	229	229	229	229
2.4pF		249	249	249	249	249
2.7pF		279	279	279	279	279
3.0pF		309	309	309	309	309
3.3pF		339	339	339	339	339
3.6pF		369	369	369	369	369
3.9pF		399	399	399	399	399
4.3pF		439	439	439	439	439
4.7pF		479	479	479	479	479
5.1pF		519	519	519	519	519
5.6pF		569	569	569	569	569
6.2pF		629	629	629	629	629
6.8pF		689	689	689	689	689
7.5pF		759	759	759	759	759
8.2pF		829	829	829	829	829
9.1pF		919	919	919	919	919
10pF	F = ±1% G = ±2% J = ±5% K = ±10%	100	100	100	100	100
11pF		110	110	110	110	110
12pF		120	120	120	120	120
13pF		130	130	130	130	130
15pF		150	150	150	150	150
16pF		160	160	160	160	160
18pF		180	180	180	180	180
20pF		200	200	200	200	200
22pF		220	220	220	220	220
24pF		240	240	240	240	240
27pF		270	270	270	270	270
30pF		300	300	300	300	300
33pF		330	330	330	330	330
36pF		360	360	360	360	360
39pF		390	390	390	390	390
43pF		430	430	430	430	430
47pF		470	470	470	470	470
51pF		510	510	510	510	510
56pF		560	560	560	560	560
62pF		620	620	620	620	620
68pF		680	680	680	680	680
75pF		750	750	750	750	750
82pF		820	820	820	820	820
91pF		910	910	910	910	910
100pF		101	101	101	101	101
110pF		111	111	111	111	111
120pF		121	121	121	121	121
130pF		131	131	131	131	131
150pF		151	151	151	151	151
160pF		161	161	161	161	161
180pF		181	181	181	181	181
200pF		201	201	201	201	201
Rated Voltage (VDC)		**25**	**50**	**100**	**200**	**250**
Voltage Code		**3**	**5**	**1**	**2**	**A**

These products are protected under one or more of the following United States Patents and their non-US counterparts: US Pat. No. 7172985; U.S. Pat. No. 7670981.

Table 1A – C31X Style/Size, Capacitance Range Waterfall cont.

C315, C316, C317, C318 Style/Size (0.100" and 0.200" Lead Spacing)						
Rated Voltage (VDC)		25	50	100	200	250
Voltage Code		3	5	1	2	A
Capacitance	**Capacitance Tolerance**	**Capacitance Code (Available Capacitance)**				
220pF	F = ±1% G = ±2% J = ±5% K = ±10%	221	221	221	221	221
240pF		241	241	241	241	241
270pF		271	271	271	271	271
300pF		301	301	301	301	301
330pF		331	331	331	331	331
360pF		361	361	361	361	361
390pF		391	391	391	391	391
430pF		431	431	431	431	431
470pF		471	471	471	471	471
510pF		511	511	511	511	511
560pF		561	561	561	561	561
620pF		621	621	621	621	621
680pF		681	681	681	681	681
750pF		751	751	751	751	751
820pF		821	821	821	821	821
910pF		911	911	911	911	911
1000pF		102	102	102	102	102
1100pF		112	112	112	112	112
1200pF		122	122	122	122	122
1300pF		132	132	132	132	132
1500pF		152	152	152	152	152
1600pF		162	162	162	162	162
1800pF		182	182	182	182	182
2000pF		202	202	202	202	202
2200pF		222	222	222	222	222
2400pF		242	242	242	242	242
2700pF		272	272	272	272	272
3000pF		302	302	302	302	302
3300pF		332	332	332	332	332
3600pF		362	362	362	362	362
3900pF		392	392	392	392	392
4300pF		432	432	432	432	432
4700pF		472	472	472	472	472
5100pF		512	512	512	512	512
5600pF		562	562	562	562	562
6200pF		622	622	622	622	622
6800pF		682	682	682	682	682
7500pF		752	752	752	752	752
8200pF		822	822	822	822	822
9100pF		912	912	912		
0.01µF		103	103	103		
0.012µF		123	123	123		
0.015µF		153	153	153		
0.018µF		183	183			
0.022µF		223	223			
0.027µF		273				
0.033µF		333				
0.039µF		393				
0.047µF		473				
Rated Voltage (VDC)		25	50	100	200	250
Voltage Code		3	5	1	2	A

These products are protected under one or more of the following United States Patents and their non-US counterparts: US Pat. No. 7172985; U.S. Pat. No. 7670981.

Table 1B – C32X Style/Size, Capacitance Range Waterfall

C320, C322, C323, C326, C328 Style/Size (0.100" and 0.200" Lead Spacing)						
Rated Voltage (VDC)		25	50	100	200	250
Voltage Code		3	5	1	2	A
Capacitance	**Capacitance Tolerance**	**Capacitance Code (Available Capacitance)**				
1pF	D = ±0.5pF	109	109	109	109	109
1.1pF		119	119	119	119	119
1.2pF		129	129	129	129	129
1.3pF		139	139	139	139	139
1.5pF		159	159	159	159	159
1.6pF		169	169	169	169	169
1.8pF		189	189	189	189	189
2.0pF		209	209	209	209	209
2.2pF		229	229	229	229	229
2.4pF		249	249	249	249	249
2.7pF		279	279	279	279	279
3.0pF		309	309	309	309	309
3.3pF		339	339	339	339	339
3.6pF		369	369	369	369	369
3.9pF		399	399	399	399	399
4.3pF		439	439	439	439	439
4.7pF		479	479	479	479	479
5.1pF		519	519	519	519	519
5.6pF		569	569	569	569	569
6.2pF		629	629	629	629	629
6.8pF		689	689	689	689	689
7.5pF		759	759	759	759	759
8.2pF		829	829	829	829	829
9.1pF		919	919	919	919	919
10pF	F = ±1% G = ±2% J = ±5% K = ±10%	100	100	100	100	100
11pF		110	110	110	110	110
12pF		120	120	120	120	120
13pF		130	130	130	130	130
15pF		150	150	150	150	150
16pF		160	160	160	160	160
18pF		180	180	180	180	180
20pF		200	200	200	200	200
22pF		220	220	220	220	220
24pF		240	240	240	240	240
27pF		270	270	270	270	270
30pF		300	300	300	300	300
33pF		330	330	330	330	330
36pF		360	360	360	360	360
39pF		390	390	390	390	390
43pF		430	430	430	430	430
47pF		470	470	470	470	470
51pF		510	510	510	510	510
56pF		560	560	560	560	560
62pF		620	620	620	620	620
68pF		680	680	680	680	680
75pF		750	750	750	750	750
82pF		820	820	820	820	820
91pF		910	910	910	910	910
100pF		101	101	101	101	101
110pF		111	111	111	111	111
120pF		121	121	121	121	121
130pF		131	131	131	131	131
150pF		151	151	151	151	151
160pF		161	161	161	161	161
180pF		181	181	181	181	181
200pF		201	201	201	201	201
Rated Voltage (VDC)		25	50	100	200	250
Voltage Code		3	5	1	2	A

These products are protected under one or more of the following United States Patents and their non-US counterparts: US Pat. No. 7172985; U.S. Pat. No. 7670981.

Table 1B – C32X Style/Size, Capacitance Range Waterfall cont.

C320, C322, C323, C326, C328 Style/Size (0.100" and 0.200" Lead Spacing)						
Rated Voltage (VDC)		**25**	**50**	**100**	**200**	**250**
Voltage Code		**3**	**5**	**1**	**2**	**A**
Capacitance	**Capacitance Tolerance**	**Capacitance Code (Available Capacitance)**				
220pF	F = ±1% G = ±2% J = ±5% K = ±10%	221	221	221	221	221
240pF		241	241	241	241	241
270pF		271	271	271	271	271
300pF		301	301	301	301	301
330pF		331	331	331	331	331
360pF		361	361	361	361	361
390pF		391	391	391	391	391
430pF		431	431	431	431	431
470pF		471	471	471	471	471
510pF		511	511	511	511	511
560pF		561	561	561	561	561
620pF		621	621	621	621	621
680pF		681	681	681	681	681
750pF		751	751	751	751	751
820pF		821	821	821	821	821
910pF		911	911	911	911	911
1000pF		102	102	102	102	102
1100pF		112	112	112	112	112
1200pF		122	122	122	122	122
1300pF		132	132	132	132	132
1500pF		152	152	152	152	152
1600pF		162	162	162	162	162
1800pF		182	182	182	182	182
2000pF		202	202	202	202	202
2200pF		222	222	222	222	222
2400pF		242	242	242	242	242
2700pF		272	272	272	272	272
3000pF		302	302	302	302	302
3300pF		332	332	332	332	332
3600pF		362	362	362	362	362
3900pF		392	392	392	392	392
4300pF		432	432	432	432	432
4700pF		472	472	472	472	472
5100pF		512	512	512	512	512
5600pF		562	562	562	562	562
6200pF		622	622	622	622	622
6800pF		682	682	682	682	682
7500pF		752	752	752	752	752
8200pF		822	822	822	822	822
9100pF		912	912	912	912	912
0.01µF		103	103	103	103	103
0.012µF		123	123	123	123	123
0.015µF		153	153	153	153	153
0.018µF		183	183	183	183	183
0.022µF		223	223	223	223	223
0.027µF		273	273	273	273	273
0.033µF		333	333	333	333	333
0.039µF		393	393	393	393	393
0.047µF		473	473	473	473	473
0.056µF		563	563	563		
0.068µF		683	683	683		
0.082µF		823	823	823		
0.100µF		104	104	104		
0.120µF		124	124			
0.150µF		154	154			
0.180µF		184				
Rated Voltage (VDC)		**25**	**50**	**100**	**200**	**250**
Voltage Code		**3**	**5**	**1**	**2**	**A**

These products are protected under one or more of the following United States Patents and their non-US counterparts: US Pat. No. 7172985; U.S. Pat. No. 7670981.

Table 1C – C32X Style/Size, Capacitance Range Waterfall

C321, C324, C325, C327 Style/Size (0.100" and 0.200" Lead Spacing)					
Rated Voltage (VDC)		**50**	**100**	**200**	**250**
Voltage Code		**5**	**1**	**2**	**A**
Capacitance	**Capacitance Tolerance**	**Capacitance Code (Available Capacitance)**			
1pF	D = ±0.5pF	109	109	109	109
1.1pF		119	119	119	119
1.2pF		129	129	129	129
1.3pF		139	139	139	139
1.5pF		159	159	159	159
1.6pF		169	169	169	169
1.8pF		189	189	189	189
2.0pF		209	209	209	209
2.2pF		229	229	229	229
2.4pF		249	249	249	249
2.7pF		279	279	279	279
3.0pF		309	309	309	309
3.3pF		339	339	339	339
3.6pF		369	369	369	369
3.9pF		399	399	399	399
4.3pF		439	439	439	439
4.7pF		479	479	479	479
5.1pF		519	519	519	519
5.6pF		569	569	569	569
6.2pF		629	629	629	629
6.8pF		689	689	689	689
7.5pF		759	759	759	759
8.2pF		829	829	829	829
9.1pF		919	919	919	919
10pF	F = ±1% G = ±2% J = ±5% K = ±10%	100	100	100	100
11pF		110	110	110	110
12pF		120	120	120	120
13pF		130	130	130	130
15pF		150	150	150	150
16pF		160	160	160	160
18pF		180	180	180	180
20pF		200	200	200	200
22pF		220	220	220	220
24pF		240	240	240	240
27pF		270	270	270	270
30pF		300	300	300	300
33pF		330	330	330	330
36pF		360	360	360	360
39pF		390	390	390	390
43pF		430	430	430	430
47pF		470	470	470	470
51pF		510	510	510	510
56pF		560	560	560	560
62pF		620	620	620	620
68pF		680	680	680	680
75pF		750	750	750	750
82pF		820	820	820	820
91pF		910	910	910	910
100pF		101	101	101	101
110pF		111	111	111	111
120pF		121	121	121	121
130pF		131	131	131	131
150pF		151	151	151	151
160pF		161	161	161	161
180pF		181	181	181	181
200pF		201	201	201	201
Rated Voltage (VDC)		**50**	**100**	**200**	**250**
Voltage Code		**5**	**1**	**2**	**A**

These products are protected under one or more of the following United States Patents and their non-US counterparts: US Pat. No. 7172985; U.S. Pat. No. 7670981.

Table 1C – C32X Style/Size, Capacitance Range Waterfall cont.

C321, C324, C325, C327 Style/Size (0.100" and 0.200" Lead Spacing)					
Rated Voltage (VDC)		50	100	200	250
Voltage Code		5	1	2	A
Capacitance	Capacitance Tolerance	Capacitance Code (Available Capacitance)			
220pF	F = ±1% G = ±2% J = ±5% K = ±10%	221	221	221	221
240pF		241	241	241	241
270pF		271	271	271	271
300pF		301	301	301	301
330pF		331	331	331	331
360pF		361	361	361	361
390pF		391	391	391	391
430pF		431	431	431	431
470pF		471	471	471	471
510pF		511	511	511	511
560pF		561	561	561	561
620pF		621	621	621	621
680pF		681	681	681	681
750pF		751	751	751	751
820pF		821	821	821	821
910pF		911	911	911	911
1000pF		102	102	102	102
1100pF		112	112	112	112
1200pF		122	122	122	122
1300pF		132	132	132	132
1500pF		152	152	152	152
1600pF		162	162	162	162
1800pF		182	182	182	182
2000pF		202	202	202	202
2200pF		222	222	222	222
2400pF		242	242	242	242
2700pF		272	272	272	272
3000pF		302	302	302	302
3300pF		332	332	332	332
3600pF		362	362	362	362
3900pF		392	392	392	392
4300pF		432	432	432	432
4700pF		472	472	472	472
5100pF		512	512	512	512
5600pF		562	562	562	562
6200pF		622	622	622	622
6800pF		682	682	682	682
7500pF		752	752	752	752
8200pF		822	822	822	822
9100pF		912	912	912	912
0.01µF		103	103	103	103
0.012µF		123	123	123	123
0.015µF		153	153	153	153
0.018µF		183	183	183	183
0.022µF		223	223	223	223
0.027µF		273	273	273	273
0.033µF		333	333	333	333
0.039µF		393	393	393	393
0.047µF		473	473	473	473
0.056µF		563	563	563	
0.068µF		683	683	683	
0.082µF		823	823	823	
0.100µF		104	104	104	
0.120µF		124	124		
0.150µF		154	154		
0.180µF		184			
Rated Voltage (VDC)		50	100	200	250
Voltage Code		5	1	2	A

These products are protected under one or more of the following United States Patents and their non-US counterparts: US Pat. No. 7172985; U.S. Pat. No. 7670981.

Table 1D – C33X Style/Size, Capacitance Range Waterfall

C330, C331, C333, C335, C336 Style/Size (0.200" and 0.250" Lead Spacing)					
Rated Voltage (VDC)		50	100	200	250
Voltage Code		5	1	2	A
Capacitance	**Capacitance Tolerance**	**Capacitance Code (Available Capacitance)**			
470pF	F = ±1% G = ±2% J = ±5% K = ±10%	471*	471*	471*	471*
510pF		511*	511*	511*	511*
560pF		561*	561*	561*	561*
620pF		621*	621*	621*	621*
680pF		681*	681*	681*	681*
750pF		751*	751*	751*	751*
820pF		821*	821*	821*	821*
910pF		911*	911*	911*	911*
1000pF		102*	102*	102*	102*
1100pF		112*	112*	112*	112*
1200pF		122*	122*	122*	122*
1300pF		132*	132*	132*	132*
1500pF		152*	152*	152*	152*
1600pF		162*	162*	162*	162*
1800pF		182*	182*	182*	182*
2000pF		202*	202*	202*	202*
2200pF		222*	222*	222*	222*
2400pF		242*	242*	242*	242*
2700pF		272*	272*	272*	272*
3000pF		302*	302*	302*	302*
3300pF		332*	332*	332*	332*
3600pF		362*	362*	362*	362*
3900pF		392*	392*	392*	392*
4300pF		432*	432*	432*	432*
4700pF		472*	472*	472*	472*
5100pF		512*	512*	512*	512*
5600pF		562*	562*	562*	562*
6200pF		622*	622*	622*	622*
6800pF		682*	682*	682*	682*
7500pF		752*	752*	752*	752*
8200pF		822*	822*	822*	822*
9100pF		912*	912*	912*	912*
0.01µF		103*	103*	103*	103*
0.012µF		123*	123*	123*	123*
0.015µF		153*	153*	153*	153*
0.018µF		183*	183*	183*	183*
0.022µF		223*	223*	223*	223*
0.027µF		273*	273*	273*	273*
0.033µF		333*	333*	333*	333*
0.039µF		393*	393*	393*	393*
0.047µF		473*	473*	473*	473*
0.056µF		563*	563*	563	563
0.068µF		683*	683*	683	683
0.082µF		823*	823*	823	823
0.100µF		104*	104*	104	104
0.120µF		124*	124	124	
0.150µF		154*	154	154	
0.180µF		184	184	184	
0.220µF		224	224		
0.270µF		274	274		
0.330µF		334	334		
0.390µF		394			
0.470µF		474			
Rated Voltage (VDC)		50	100	200	250
Voltage Code		5	1	2	A

These products are protected under one or more of the following United States Patents and their non-US counterparts: US Pat. No. 7172985; U.S. Pat. No. 7670981.

** Capacitor is supplied with a "Shoulder-Bend" lead configuration in Style/Size C330 and C331.*

Table 1E – C34X Style/Size, Capacitance Range Waterfall

C340, C346 Style/Size (0.200" Lead Spacing)				
Rated Voltage (VDC)		50	100	200
Voltage Code		5	1	2
Capacitance	Capacitance Tolerance	Capacitance Code (Available Capacitance)		
0.01µF	F = ±1% G = ±2% J = ±5% K = ±10%	103*	103*	103
0.012µF		123*	123	123
0.015µF		153	153	153
0.018µF		183	183	183
0.022µF		223	223	223
0.027µF		273	273	273
0.033µF		333	333	333
0.039µF		393	393	393
0.047µF		473	473	473
0.056µF		563	563	
0.068µF		683	683	
Rated Voltage (VDC)		50	100	200
Voltage Code		5	1	2

** Capacitor is supplied with a "Shoulder-Bend" lead configuration in Style/Size C340*

Table 1F – C35X Style/Size, Capacitance Range Waterfall

C350, C356 Style/Size (0.400" Lead Spacing)				
Rated Voltage (VDC)		50	100	200
Voltage Code		5	1	2
Capacitance	Capacitance Tolerance	Capacitance Code (Available Capacitance)		
4700pF	F = ±1% G = ±2% J = ±5% K = ±10%	472	472	472
5100pF		512	512	512
5600pF		562	562	562
6200pF		622	622	622
6800pF		682	682	682
7500pF		752	752	752
8200pF		822	822	822
9100pF		912	912	912
0.01µF		103	103	103
0.012µF		123	123	123
0.015µF		153	153	153
0.018µF		183	183	183
0.022µF		223	223	223
0.027µF		273	273	273
0.033µF		333	333	333
0.039µF		393	393	393
0.047µF		473	473	473
0.056µF		563	563	563
0.068µF		683	683	683
0.082µF		823	823	823
0.100µF		104	104	104
0.120µF		124	124	124
0.150µF		154	154	154
0.180µF		184	184	184
0.220µF		224	224	224
0.270µF		274	274	
0.330µF		334	334	
0.390µF		394		
0.470µF		474		
Rated Voltage (VDC)		50	100	200
Voltage Code		5	1	2

These products are protected under one or more of the following United States Patents and their non-US counterparts: US Pat. No. 7172985; U.S. Pat. No. 7670981.

Soldering Process

Recommended Soldering Methods:
- Solder Wave
- Hand Soldering (Manual)

Recommended Soldering Profile:
- Optimum Wave Solder Profile

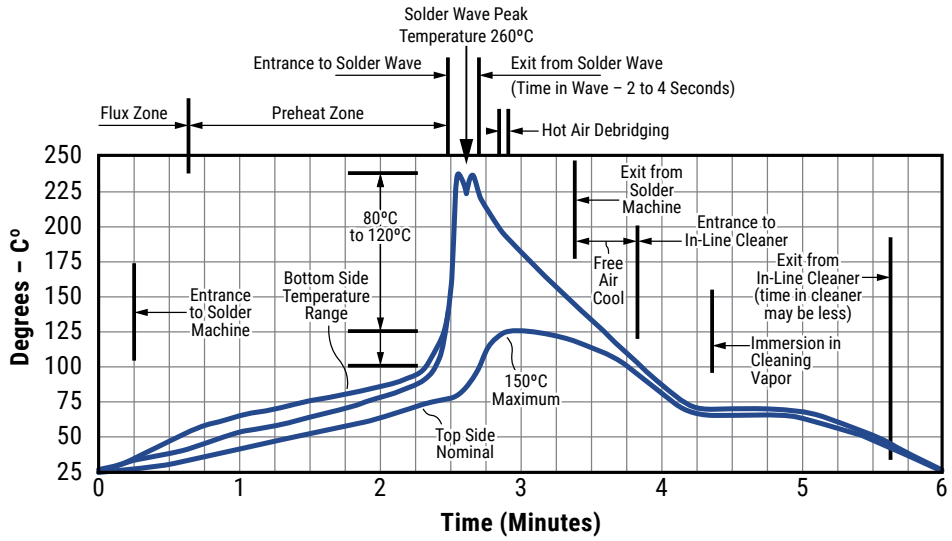

Mounting

All encased capacitors will pass the Resistance to Soldering Heat of MIL-STD-202, Method 210, Condition C. This test simulates wave solder topside board mount product. This demonstration of resistance to solder heat is in accordance with what is believed to be the industry standard. More severe treatment must be considered reflective of an improper soldering process.

The above figure is a recommended solder wave profile for both axial and radial leaded ceramic capacitors.

- Hand Soldering (Manual)

with Pre-heating

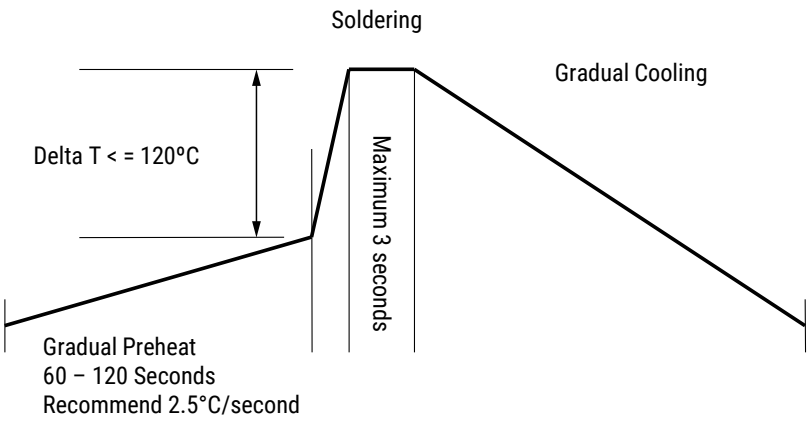

Table 2 – Performance & Reliability: Test Methods and Conditions

Stress	Reference	Test or Inspection Method
Solderability	J–STD–002	Magnification 50X. Conditions: a) Method A, at 235°C, Category 3
Temperature Cycling	JESD22 Method JA–104	5 cycles (–55°C to +125°C), measurement at 24 hours ±4 hours after test conclusion.
Biased Humidity	MIL–STD–202 Method 103	Load humidity, 1,000 hours 85°C/85%RH and rated voltage. Add 100 K ohm resistor. Measurement at 24 hours ±4 hours after test conclusion.
		Low volt humidity, 1,000 hours 85C°/85%RH and 1.5 V. Add 100 K ohm resistor. Measurement at 24 hours ±4 hours after test conclusion.
Moisture Resistance	MIL–STD–202 Method 106	t = 24 hours/cycle. Steps 7a and 7b not required. Unpowered. Measurement at 24 hours ±4 hours after test conclusion.
Thermal Shock	MIL–STD–202 Method 107	–55°C to +125°C. Note: Number of cycles required – 300. Maximum transfer time – 20 seconds. Dwell time – 15 minutes. Air – Air.
High Temperature Life	MIL–STD–202 Method 108/EIA–198	1,000 hours at 125°C (85°C for Z5U) with 1 X rated voltage applied.
Storage Life	MIL–STD–202 Method 108	125°C, 0 VDC for 1,000 hours.
Vibration	MIL–STD–202 Method 204	5 g for 20 minutes, 12 cycles each of 3 orientations. Note: Use 8"X5" PCB .031" thick 7 secure points on one long side and 2 secure points at corners of opposite sides. Parts mounted within 2" from any secure point. Test from 10 – 2,000 Hz.
Resistance to Soldering Heat	MIL–STD–202 Method 210	Condition B. No preheat of samples. Note: single wave solder – procedure 2.
Terminal Strength	MIL–STD–202 Method 211	Conditions A (454g), Condition C (227g)
Mechanical Shock	MIL–STD–202 Method 213	Figure 1 of Method 213, Condition C.
Resistance to Solvents	MIL–STD–202 Method 215	Add aqueous wash chemical – OKEM Clean or equivalent.

Storage & Handling

The un-mounted storage life of a leaded ceramic capacitor is dependent upon storage and atmospheric conditions as well as packaging materials. While the ceramic chips enveloped under the epoxy coating themselves are quite robust in most environments, solderability of the wire lead on the final epoxy-coated product will be degraded by exposure to high temperatures, high humidity, corrosive atmospheres, and long term storage. In addition, packaging materials will be degraded by high temperature and exposure to direct sunlight – reels may soften or warp, and tape peel force may increase.

KEMET recommends storing the un-mounted capacitors in their original packaging, in a location away from direct sunlight, and where the temperature and relative humidity do not exceed 40 degrees centigrade and 70% respectively. For optimum solderability, capacitor stock should be used promptly, preferably within 18 months of receipt. For applications requiring pre-tinning of components, storage life may be extended if solderability is verified. Before cleaning, bonding or molding these devices, it is important to verify that your process does not affect product quality and performance. KEMET recommends testing and evaluating the performance of a cleaned, bonded or molded product prior to implementing and/or qualifying any of these processes.

Construction

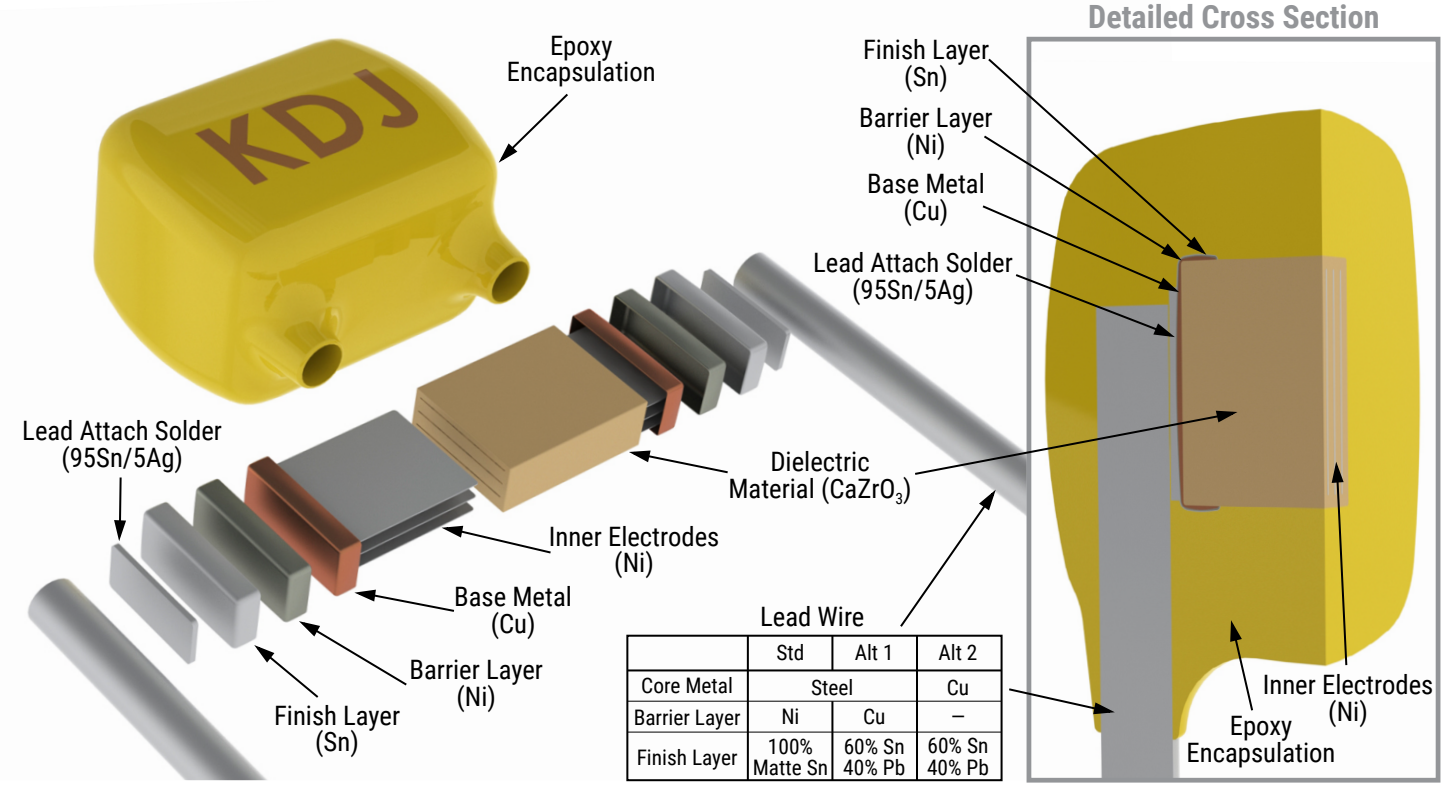

	Std	Alt 1	Alt 2
Core Metal	Steel		Cu
Barrier Layer	Ni	Cu	–
Finish Layer	100% Matte Sn	60% Sn 40% Pb	60% Sn 40% Pb

Marking

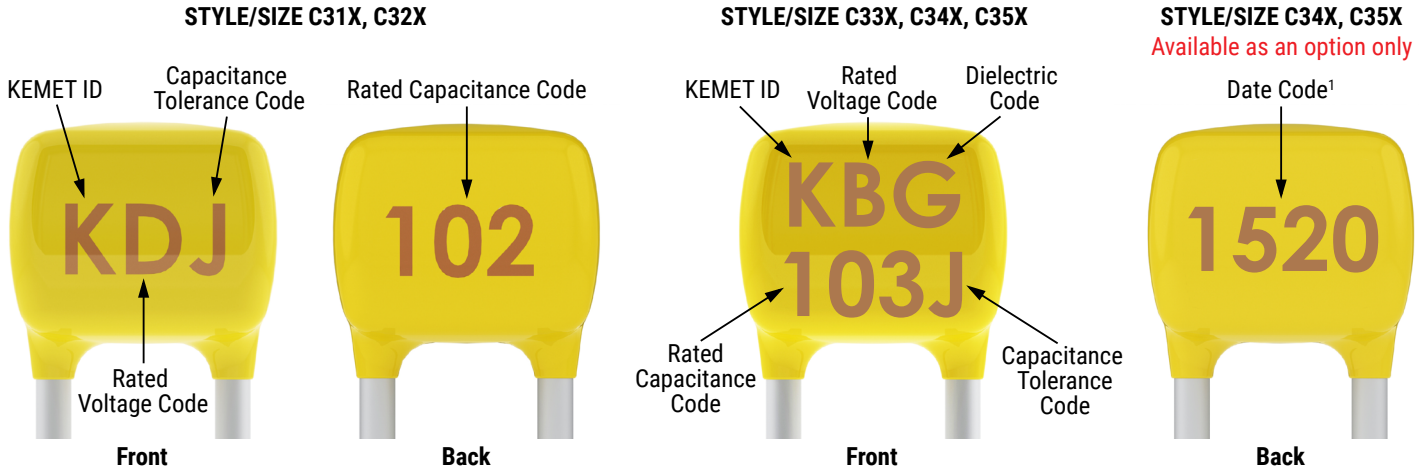

[1] To properly request the inclusion of the date code in the marking information provided on the component, ordering code C-SPEC 9207 must be added to the end of the ordering code.

Date Code	
15	20
Manufacturing Year: 15 = 2015	Manufacturing Week: 20 = Week 20 (of mfg. calendar year)

Packaging Quantities

<table>
<tr><th>Style/ Size</th><th>Standard Bulk Quantity</th><th>Ammo Pack Quantity Maximum</th><th>Reel Quantity Maximum (12" Reel)</th></tr>
<tr><td>315</td><td rowspan="13">500/Bag</td><td rowspan="5">2500</td><td rowspan="5">2500</td></tr>
<tr><td>316</td></tr>
<tr><td>317</td></tr>
<tr><td>318</td></tr>
<tr><td>320</td></tr>
<tr><td>321</td><td>N/A</td><td>N/A</td></tr>
<tr><td>322</td><td rowspan="7">2500</td><td rowspan="7">2500</td></tr>
<tr><td>323</td></tr>
<tr><td>324</td></tr>
<tr><td>325</td></tr>
<tr><td>326</td></tr>
<tr><td>327</td></tr>
<tr><td>328</td></tr>
<tr><td>330</td><td rowspan="5">250/Bag</td><td>1500</td><td>1500</td></tr>
<tr><td>331</td><td>N/A</td><td>N/A</td></tr>
<tr><td>333</td><td colspan="2" rowspan="3">1500</td></tr>
<tr><td>335</td></tr>
<tr><td>336</td></tr>
<tr><td>340</td><td rowspan="2">100/Bag</td><td rowspan="2">1000</td><td rowspan="2">1000</td></tr>
<tr><td>346</td></tr>
<tr><td>350</td><td rowspan="2">50/Bag</td><td rowspan="2">N/A</td><td rowspan="2">500</td></tr>
<tr><td>356</td></tr>
</table>

Tape & Reel Packaging Information

KEMET offers standard reeling of Molded and Conformally Coated Radial Leaded Capacitors in accordance with EIA standard 468. Parts are taped to a tagboard carrier strip, and wound on a reel as shown in Figure 1. Kraft paper interleaving is inserted between the layers of capacitors on the reel. Ammopack is also available, with the same lead tape configuration and package quantities.

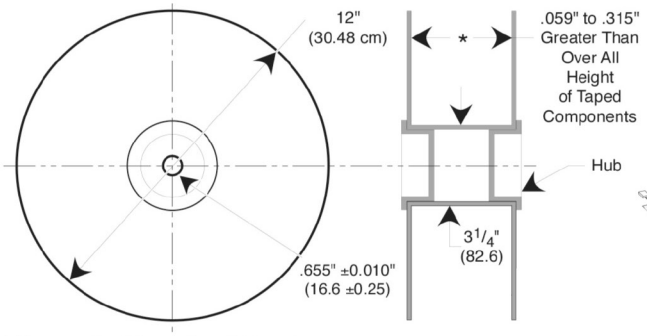

Figure 3: Standard Reel

Figure 1

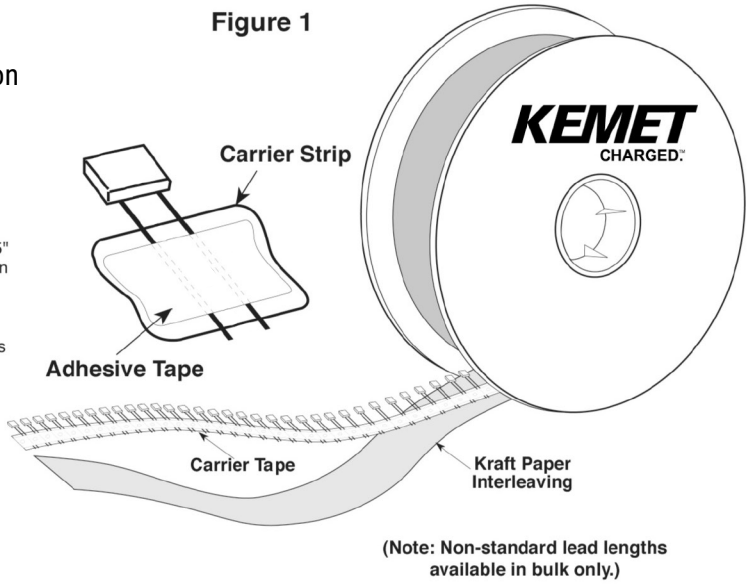

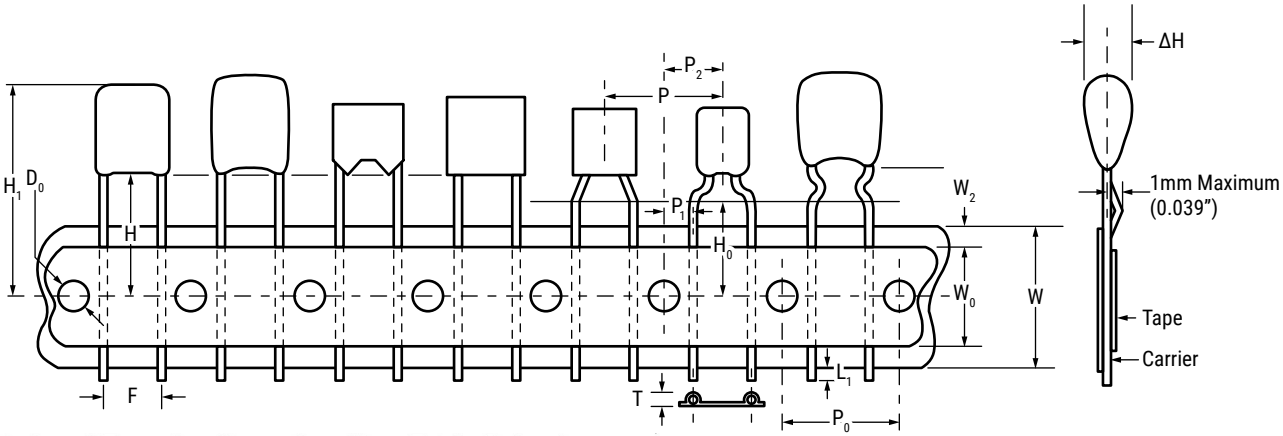

Figure 2: Lead Tape Configuration (See Table Below)

Ceramic Radial Tape and Reel Dimensions

Metric will govern

Constant Dimensions — Millimeters (Inches)								
D_0 ±0.2 (0.008)	P_0 ±0.3 (0.012)	ΔH ±0.2 (0.008)	L_1 Maximum	t ±0.2 (0.008)	T Maximum	W +1.0/−0.5 (+0.039/−0.020)	W_0 Minimum	W_2 Maximum
4.00 (0.157)	12.7 (0.500)	4.0 (0.157)	1.0 (0.039)	0.7 (0.051)	1.5 (0.059)	18.0 (0.709)	5.0 (0.197)	3.0 (0.118)

Ceramic Radial Tape and Reel Dimensions cont.

Metric will govern

Variable Dimensions — Millimeters (Inches)							
F ±0.78 (0.030)[1]	P_1 ±0.30 (0.012)[1]	P ±0.3 (0.012)	P_2 ±1.3 (0.051)	H		H_0	
				Straight Lead Configuration		Formed Lead Configuration[2]	
				Packaging C-Spec[3]			
				7301/7305	7303/7317	7301/7305	7303/7317
2.54 (0.100)	5.08 (0.200)	12.7 (0.500)	6.35 (0.250)	16.0±0.5 (0.630±0.020)	18.0 (0.709) Minimum	16.0±0.5 (0.630±0.020)	18.0 (0.709) Minimum
4.32 (0.170)	3.89 (0.153)	12.7 (0.500)	6.35 (0.250)				
5.08 (0.200)	3.81 (0.150)	12.7 (0.500)	6.35 (0.250)				
5.59 (0.220)	3.25 (0.128)	12.7 (0.500)	6.35 (0.250)				
6.98 (0.275)	2.54 (0.100)	12.7 (0.500)	6.35 (0.250)				
7.62 (0.300)	2.24 (0.088)	12.7 (0.500)	6.35 (0.250)				
9.52 (0.375)	7.62 (0.300)	12.7 (0.500)	6.35 (0.250)				
10.16 (0.400)	7.34 (0.290)	25.4 (1.000)	N/A				
12.06 (0.475)	6.35 (0.250)	25.4 (1.000)	N/A				
14.60 (0.575)	5.08 (0.200)	25.4 (1.000)	N/A				
17.14 (0.675)	3.81 (0.15)	25.4 (1.000)	N/A				

[1] Measured at the egress from the carrier tape, on the component side.

[2] Formed lead configuration includes: "shoulder bend", "inside kink", "outside kink", and "snap-in". For more information regarding available lead configurations see "Dimensions" section of this document.

[3] The "Packaging C-Spec" is a 4 digit code which identifies the packaging type, lead length and/or lead material. When ordering, the proper code must be included in the 15th through 18th character positions of the ordering code. See "Ordering Information" section of this document for further details.

Symbol Reference Table	
D_0	Sprocket Hole Diameter
P_0	Sprocket Hole Pitch
P	Component Pitch
F	Lead Spacing
P_1	Sprocket Hole Center to Lead Center
P_2	Sprocket Hole Center To Component Center
H	Height to Seating Plane (Straight Leads Only)
H_0	Height to Seating Plane (Formed Leads Only)
H_1	Component Height Above Tape Center
ΔH	Component Alignment
L_1	Lead Protrusion
t	Composite Tape Thickness
W	Carrier Tape Width
W_0	Hold-Down Tape Width
W_2	Hold-Down Tape Location

KEMET Electronics Corporation Sales Offices

For a complete list of our global sales offices, please visit www.kemet.com/sales.

Disclaimer

YAGEO Corporation and its affiliates do not recommend the use of commercial or automotive grade products for high reliability applications or manned space flight.

All product specifications, statements, information and data (collectively, the "Information") in this datasheet are subject to change. The customer is responsible for checking and verifying the extent to which the Information contained in this publication is applicable to an order at the time the order is placed. All Information given herein is believed to be accurate and reliable, but it is presented without guarantee, warranty, or responsibility of any kind, expressed or implied.

Statements of suitability for certain applications are based on KEMET Electronics Corporation's ("KEMET") knowledge of typical operating conditions for such applications, but are not intended to constitute – and KEMET specifically disclaims – any warranty concerning suitability for a specific customer application or use. The Information is intended for use only by customers who have the requisite experience and capability to determine the correct products for their application. Any technical advice inferred from this Information or otherwise provided by KEMET with reference to the use of KEMET's products is given gratis, and KEMET assumes no obligation or liability for the advice given or results obtained.

Although KEMET designs and manufactures its products to the most stringent quality and safety standards, given the current state of the art, isolated component failures may still occur. Accordingly, customer applications which require a high degree of reliability or safety should employ suitable designs or other safeguards (such as installation of protective circuitry or redundancies) in order to ensure that the failure of an electrical component does not result in a risk of personal injury or property damage.

Although all product–related warnings, cautions and notes must be observed, the customer should not assume that all safety measures are indicated or that other measures may not be required.

KEMET is a registered trademark of KEMET Electronics Corporation.

Looking for pricing, stock, or lifecycle information?

Click below to explore more details on WIN SOURCE:

- View C052C309D2G5CA on WIN SOURCE
- Kemet Information

Optimize Your Supply Chain with WIN SOURCE Solutions

- Global Sourcing Solution
- Obsolete Management
- Cost Control Management
- Shortage Management
- Alternative Solution
- Excess Inventory Management