HiQ-CBR Automotive Series, C0G Dielectric, Low ESR, 50 VDC, 1 MHz – 50 GHz (RF & Microwave)

Overview

KEMET's HiQ CBR Automotive RF Capacitor Series features a copper electrode BME (Base Metal Electrode) system that offers ultra-low ESR and High Q in the VHF, UHF, and microwave frequency bands. Low ESR allows for higher RF currents which are ideal for applications such as V2X, safety systems, power train and automotive communication systems.

CBR Series capacitors exhibit no change in capacitance with respect to time and voltage, and boast a negligible change in capacitance with reference to ambient temperature.

HiQ-CBR RF & MICROWAVE

KEMET's HiQ CBR RF capacitors are characterized using Modelithics™ substrate scalable models and is available in most EDA software. Contact KEMET Sales for details on accessing models.

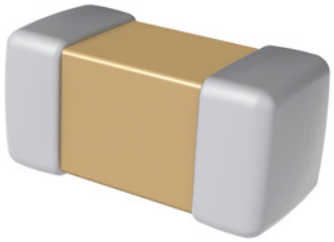

Benefits

- AEC-Q200 Qualified
- Ultra-low ESR and High Q
- High SRF
- High thermal stability
- 1 MHz to 50 GHz frequency range
- Operating temperature range of −55°C to +125°C
- Base metal electrode (BME) dielectric system
- Pb-free and RoHS compliant
- 0402 and 0603 case sizes (inches)
- DC voltage rating of 50 V
- Capacitance offerings ranging from 0.1 pF up to 100 pF
- Available capacitance tolerances of ±0.05 pF, ±0.1 pF, ±0.25 pF, ±0.5 pF, ±1%, ±2%, and ±5%
- Negligible capacitance change with respect to temperature
- 100% pure matte tin-plated termination finish allowing for excellent solderability

Applications

- V2X
- Safety Systems
- Power Train
- Automotive Communication Systems
- Bypass, coupling, filtering, impedance matching, DC blocking

© KEMET Electronics Corporation • One East Broward Boulevard
Fort Lauderdale, FL 33301 USA • 954-766-2800 • www.kemet.com

Ordering Information

CBR	04	C	330	F	5	G	A	C	AUTO
Series	Case Size (L"x W")	Specification/ Series	Capacitance Code (pF)	Capacitance Tolerance	Voltage	Dielectric	Termination Style	Termination Finish	Packaging/ Grade (C-Spec)
CBR	04 = 0402 06 = 0603	C = Standard	Two significant digits and number of zeros Use 9 for 1.0 – 9.9 pF Use 8 for 0.1 – 0.99 pF ex. 2.2 pF = 229 ex. 0.5 pF = 508	A = ±0.05 pF B = ±0.1 pF C = ±0.25 pF D = ±0.5 pF F = ±1% G = ±2% J = ±5%	5 = 50 V	G = C0G	A = N/A	C = 100% Matte Sn	See "Packaging C-Spec Ordering Options Table"

Tape & Reel Packaging Information

Packaging Type	Packaging Ordering Code (C-SPEC)
7" Reel	AUTO
13" Reel	AUTO7411

Environmental Compliance

Lead (Pb)-free, RoHS, and REACH compliant without exemptions

Qualification/Certification

Automotive grade products meet or exceed the requirements outlined by the Automotive Electronics Council. Details regarding test methods and conditions are referenced in document AEC-Q200, Stress Test Qualification for Passive Components. For additional information regarding the Automotive Electronics Council and AEC-Q200, please visit their website at www.aecouncil.com.

Automotive C-Spec Information

KEMET automotive grade products meet or exceed the requirements outlined by the Automotive Electronics Council. Details regarding test methods and conditions are referenced in document AEC–Q200, Stress Test Qualification for Passive Components. These products are supported by a Product Change Notification (PCN) and Production Part Approval Process warrant (PPAP).

Automotive products offered through our distribution channel have been assigned an inclusive ordering code C-Spec, "AUTO." This C-Spec was developed in order to better serve small and medium-sized companies that prefer an automotive grade component without the requirement to submit a customer Source Controlled Drawing (SCD) or specification for review by a KEMET engineering specialist. This C-Spec is therefore not intended for use by KEMET OEM automotive customers and are not granted the same "privileges" as other automotive C-Specs. Customer PCN approval and PPAP request levels are limited (see details below.)

Product Change Notification (PCN)
The KEMET product change notification system is used to communicate primarily the following types of changes:
- Product/process changes that affect product form, fit, function, and/or reliability
- Changes in manufacturing site
- Product obsolescence

KEMET Automotive C-Spec	Customer Notification Due To:		Days Prior To Implementation
	Process/Product change	Obsolescence*	
KEMET assigned[1]	Yes (with approval and sign off)	Yes	180 days minimum
AUTO	Yes (without approval)	Yes	90 days minimum

[1] *KEMET assigned C-Specs require the submittal of a customer SCD or customer specification for review. For additional information contact KEMET.*

Production Part Approval Process (PPAP)
The purpose of the Production Part Approval Process is:
- To ensure that supplier can meet the manufacturability and quality requirements for the purchased parts.
- To provide the evidence that all customer engineering design records and specification requirements are properly understood and fulfilled by the manufacturing organization.
- To demonstrate that the established manufacturing process has the potential to produce the part.

KEMET Automotive C-Spec	PPAP (Product Part Approval Process) Level				
	1	2	3	4	5
KEMET assigned[1]	●	●	●	●	●
AUTO			○		

[1] *KEMET assigned C-Specs require the submittal of a customer SCD or customer specification for review. For additional information contact KEMET.*

● Part number specific PPAP available
○ Product family PPAP only

Dimensions – Millimeters (Inches)

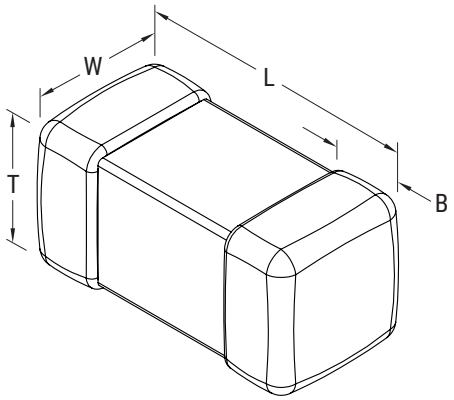

Case Size (in.)	Case Size (mm)	L Length	W Width	T Thickness	B Bandwidth	Mounting Technique
0402	1005	1.00 ±0.05 (0.040 ±0.002)	0.50 ±0.05 (0.020 ±0.002)	0.50 ±0.05 (0.020 ±0.002)	0.25 ±0.10 (0.010 ±0.004)	Solder Wave or Solder Reflow
0603	1608	1.60 ±0.10 (0.063 ±0.004)	0.80 ±0.10 (0.031 ±0.004)	0.80 ±0.10 (0.031 ±0.004)	0.40 ±0.20 (0.016 ±0.008)	

Electrical Parameters/Characteristics

Item	Parameters/Characteristics
Operating Temperature Range	−55°C to +125°C
Capacitance Change with Reference to +25°C and 0 VDC Applied (TCC)	±30 ppm/°C
Aging Rate (Maximum % Capacitance Loss/Decade Hour)	0%
[1]Dielectric Withstanding Voltage (DWV)	250% of rated voltage (5 ±1 seconds and charge/discharge not exceeding 50 mA)
[2]Quality Factor (Q):	≥ 1,000 for capacitance values ≥ 30 pF ≥ 400 + 20C for capacitance values < 30 pF (C = Capacitance in pF)
Insulation Resistance (IR) Limit at 25°C	10 GΩ minimum (rated voltage applied for 120 ±5 seconds)

[1] DWV is the voltage a capacitor can withstand (survive) for a short period of time. It exceeds the nominal and continuous working voltage of the capacitor.

[2] Capacitance and Quality Factor (Q) measured at 1 MHz ±100 kHz and 1.0 ±0.2 V_{rms}

Table 1 – CBR AUTO Series, Capacitance Range Waterfall

Case Size – Inches (mm)		0402 (1005)	0603 (1608)
Rated Voltage (VDC)		50	50
Voltage Code		5	5
Capacitance	Capacitance Tolerance	Capacitance Code (Available Capacitance)	
0.1 pF	B = ±0.1pF	108	
0.2 pF	A = ±0.05 pF B = ±0.1 pF C = ±0.25 pF	208	208
0.3 pF		308	308
0.4 pF		408	408
0.5 pF		508	508
0.6 pF		608	608
0.7 pF		708	708
0.8 pF		808	808
0.9 pF		908	908
1.0 pF		109	109
1.1 pF		119	119
1.2 pF		129	129
1.3 pF		139	139
1.4 pF		149	149
1.5 pF		159	159
1.6 pF		169	169
1.7 pF		179	179
1.8 pF		189	189
1.9 pF		199	199
2.0 pF		209	209
2.1 pF	A = ±0.05 pF B = ±0.1 pF C = ±0.25 pF D = ±0.5 pF	219	219
2.2 pF		229	229
2.3 pF		239	239
2.4 pF		249	249
2.5 pF		259	259
2.6 pF		269	269
2.7 pF		279	279
2.8 pF		289	289
2.9 pF		299	299
3.0 pF		309	309
3.1 pF		319	319
3.2 pF		329	329
3.3 pF		339	339
3.4 pF		349	349
3.5 pF		359	359
3.6 pF		369	369
3.7 pF		379	379
3.8 pF		389	389
3.9 pF		399	399
4.0 pF		409	409
4.1 pF		419	419
4.2 pF		429	429
4.3 pF		439	439
4.4 pF		449	449
4.5 pF		459	459
4.6 pF		469	469
4.7 pF		479	479
4.8 pF		489	489
4.9 pF		499	499
5.0 pF		509	509
Rated Voltage (VDC)		50	50
Voltage Code		5	5

Table 1 – CBR AUTO Series, Capacitance Range Waterfall cont.

Case Size – Inches (mm)		0402 (1005)	0603 (1608)
Rated Voltage (VDC)		50	50
Voltage Code		5	5
Capacitance	Capacitance Tolerance	Capacitance Code (Available Capacitance)	
5.1 pF	B = ±0.1 pF C = ±0.25 pF D = ±0.5 pF	519	519
5.2 pF		529	529
5.3 pF		539	539
5.4 pF		549	549
5.5 pF		559	559
5.6 pF		569	569
5.7 pF		579	579
5.8 pF		589	589
5.9 pF		599	599
6.0 pF		609	609
6.1 pF		619	619
6.2 pF		629	629
6.3 pF		639	639
6.4 pF		649	649
6.5 pF		659	659
6.6 pF		669	669
6.7 pF		679	679
6.8 pF		689	689
6.9 pF		699	699
7.0 pF		709	709
7.1 pF		719	719
7.2 pF		729	729
7.3 pF		739	739
7.4 pF		749	749
7.5 pF		759	759
7.6 pF		769	769
7.7 pF		779	779
7.8 pF		789	789
7.9 pF		799	799
8.0 pF		809	809
8.1 pF		819	819
8.2 pF		829	829
8.3 pF		839	839
8.4 pF		849	849
8.5 pF		859	859
8.6 pF		869	869
8.7 pF		879	879
8.8 pF		889	889
8.9 pF		899	899
9.0 pF		909	909
9.1 pF		919	919
9.2 pF		929	929
9.3 pF		939	939
9.4 pF		949	949
9.5 pF		959	959
9.6 pF		969	969
9.7 pF		979	979
9.8 pF		989	989
9.9 pF		999	999
Rated Voltage (VDC)		50	50
Voltage Code		5	5

Table 1 – CBR AUTO Series, Capacitance Range Waterfall cont.

Case Size – Inches (mm)		0402 (1005)	0603 (1608)
Rated Voltage (VDC)		50	50
Voltage Code		5	5
Capacitance	Capacitance Tolerance	Capacitance Code (Available Capacitance)	
10 pF	F = ±1% G = ±2% J = ±5%	100	100
11 pF		110	110
12 pF		120	120
13 pF		130	130
15 pF		150	150
16 pF		160	160
18 pF		180	180
20 pF		200	200
22 pF		220	220
24 pF		240	240
27 pF		270	270
30 pF		300	300
33 pF		330	330
36 pF		360	360
39 pF		390	390
43 pF		430	430
47 pF		470	470
51 pF		510	510
56 pF		560	560
62 pF		620	620
68 pF		680	680
75 pF		750	750
82 pF		820	820
91 pF		910	910
100 pF		101	101
Rated Voltage (VDC)		50	50
Voltage Code		5	5

Table 2 – Chip Thickness/Reeling Quantities

Chip Size Inches (mm)	Chip Thickness (mm)	Reel Quantity	
		7" Paper	13" Paper
0402 (1005)	0.50 ±0.05	10,000	50,000
0603 (1608)	0.80 ±0.10	4,000	15,000

Table 3 – Chip Capacitor Land Pattern Design Recommendations per IPC–7351 (mm)

Case Size (Inches)	Case Size (mm)	Density Level A: Maximum (Most) Land Protrusion					Density Level B: Median (Nominal) Land Protrusion					Density Level C: Minimum (Least) Land Protrusion				
		C	Y	X	V1	V2	C	Y	X	V1	V2	C	Y	X	V1	V2
0402	1005	0.50	0.72	0.72	2.20	1.20	0.45	0.62	0.62	1.90	1.00	0.40	0.52	0.52	1.60	0.80
0603	1608	0.90	1.15	1.10	4.00	2.10	0.80	0.95	1.00	3.10	1.50	0.60	0.75	0.90	2.40	1.20

Density Level A: *For low-density product applications. Recommended for wave solder applications and provides a wider process window for reflow solder processes. KEMET only recommends wave soldering of 0603(1608) and 0805 (2012) case sizes.*
Density Level B: *For products with a moderate level of component density. Provides a robust solder attachment condition for reflow solder processes.*
Density Level C: *For high component density product applications. Before adapting the minimum land pattern variations the user should perform qualification testing based on the conditions outlined in IPC Standard 7351 (IPC–7351).*

Image below based on Density Level B for an EIA 1608 case size.

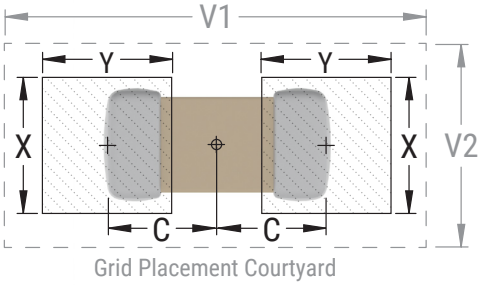

Soldering Process

Recommended Soldering Technique:

- Solder wave or solder reflow for EIA case sizes 0603, 0805 and 1206
- All other EIA case sizes are limited to solder reflow only

Recommended Reflow Soldering Profile:

KEMET's families of surface mount multilayer ceramic capacitors (SMD MLCCs) are compatible with wave (single or dual), convection, IR or vapor phase reflow techniques. Preheating of these components is recommended to avoid extreme thermal stress. KEMET's recommended profile conditions for convection and IR reflow reflect the profile conditions of the IPC/J-STD-020 standard for moisture sensitivity testing. These devices can safely withstand a maximum of three reflow passes at these conditions.

Profile Feature	100% Matte Sn
Preheat/Soak Temperature Minimum (T_{Smin}) Temperature Maximum (T_{Smax}) Time (t_S) from T_{Smin} to T_{Smax}	 150°C 200°C 60 – 120 seconds
Ramp-Up Rate (T_L to T_P)	3°C/second maximum
Liquidous Temperature (T_L)	217°C
Time Above Liquidous (t_L)	60 – 150 seconds
Peak Temperature (T_P)	260°C
Time Within 5°C of Maximum Peak Temperature (t_P)	30 seconds maximum
Ramp-Down Rate (T_P to T_L)	6°C/second maximum
Time 25°C to Peak Temperature	8 minutes maximum

Note 1: All temperatures refer to the center of the package, measured on the capacitor body surface that is facing up during assembly reflow.

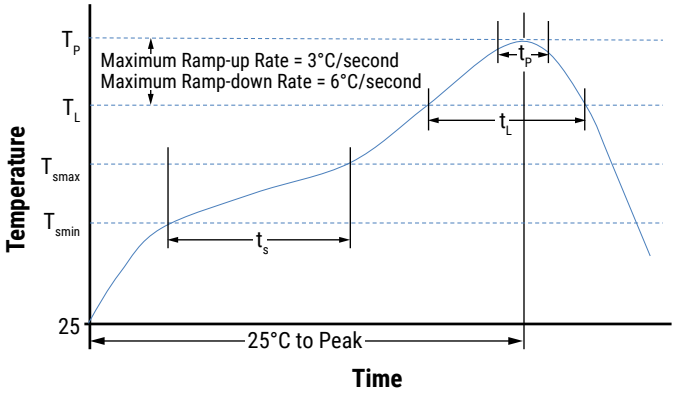

Storage and Handling

Ceramic chip capacitors should be stored in normal working environments. While the chips themselves are quite robust in other environments, solderability will be degraded by exposure to high temperatures, high humidity, corrosive atmospheres, and long term storage. In addition, packaging materials will be degradedby high temperature – reels may soften or warp, and tape peel force may increase. KEMET recommends that maximum storage temperature not exceed 40°C, and maximum storage humidity not exceed 70% relative humidity. In addition, temperature fluctuations should be minimized to avoid condensation on the parts, and atmospheres should be free of chlorine and sulfur bearing compounds. For optimized solderability, chip stock should be used promptly, preferably within 1.5 years of receipt.

Construction

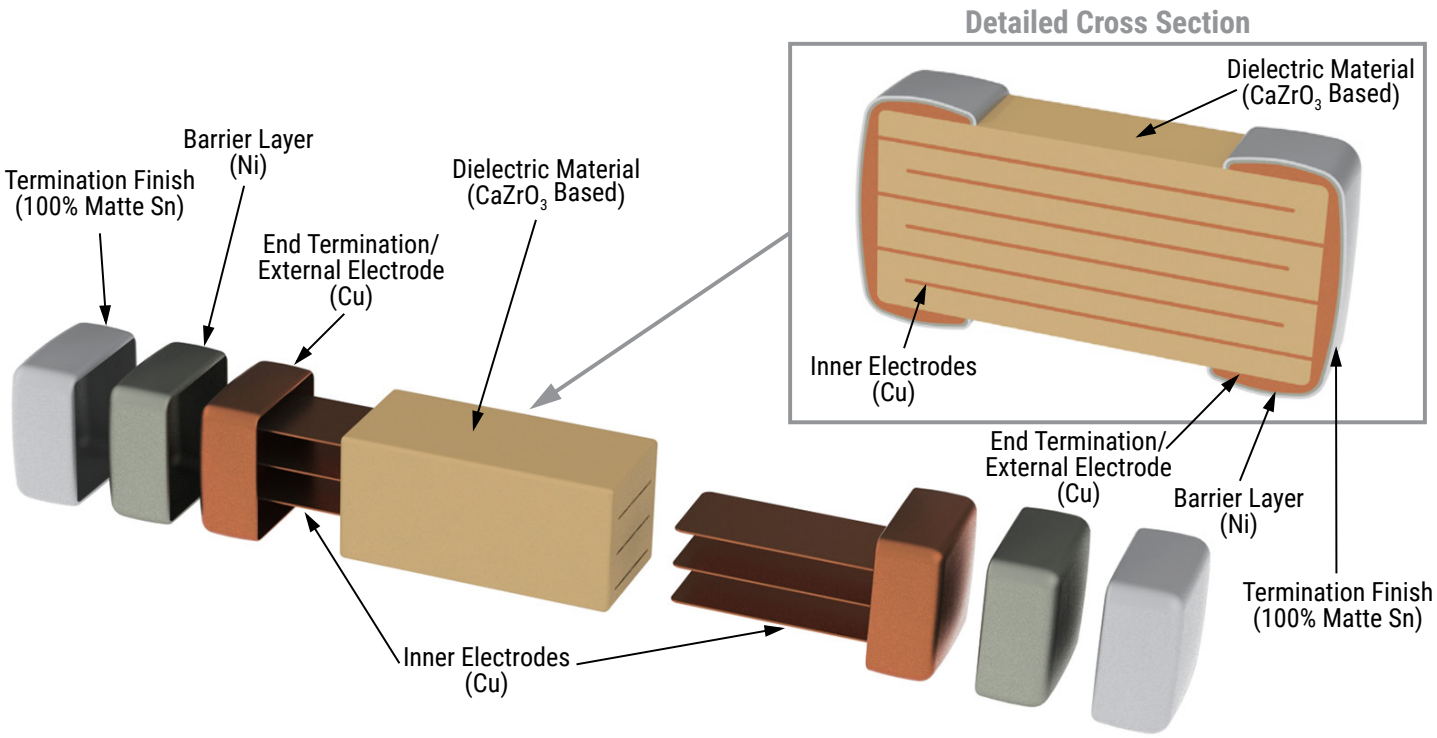

Tape & Reel Packaging Information

KEMET offers RF and Microwave Multilayer Ceramic Chip Capacitors packaged in 8 mm tape on 7" reels in accordance with EIA Standard 481. This packaging system is compatible with all tape-fed automatic pick and place systems.

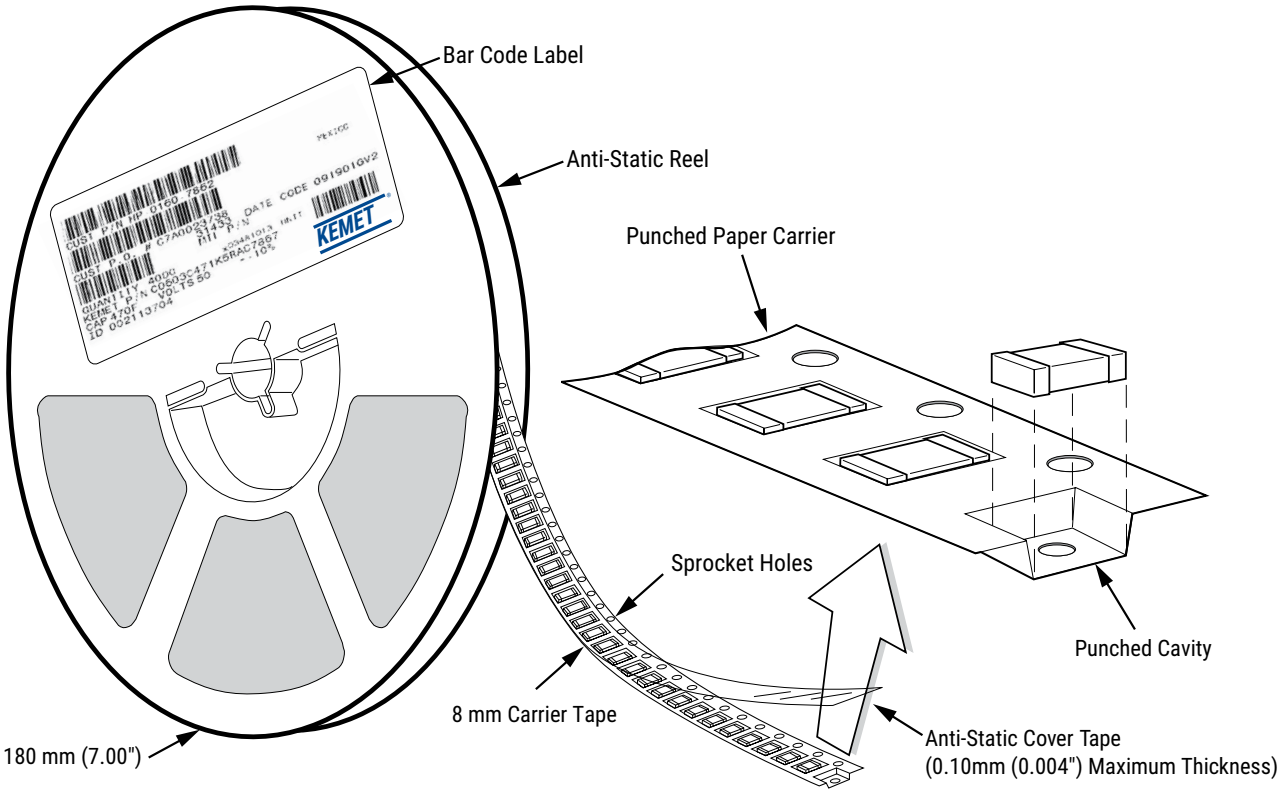

Table 4 – Carrier Tape Configuration (mm)

EIA Case Size	Tape Size (W)*	Lead Space (P_1)*
0402	8	2
0603	8	4

**Refer to Figure 1 for W and P_1 carrier tape reference locations.*
**Refer to Table 6 for tolerance specifications.*

Figure 1 – Punched (Paper) Carrier Tape Dimensions

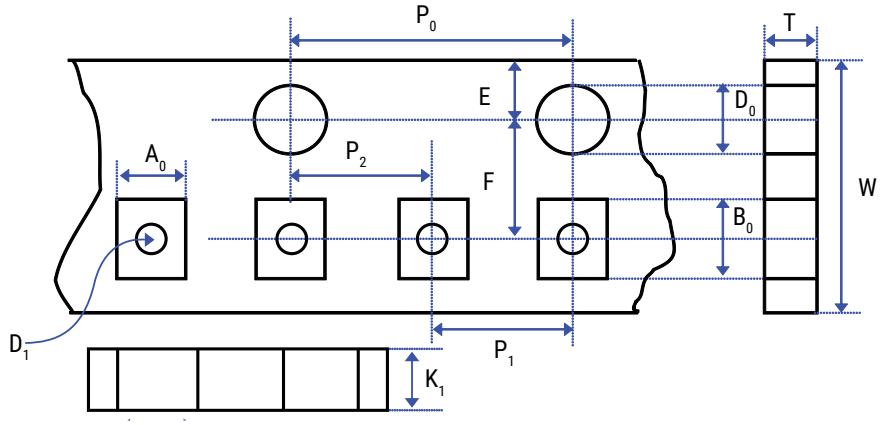

Table 5 – Punched (Paper) Carrier Tape Dimensions

Metric will govern

Constant Dimensions — Millimeters (Inches)						
Tape Size	D_0	E_1	P_0	P_2	R Reference Note 2	K_0
8 mm	1.55+0.05 (0.061+0.002)	1.55±0.05 (0.061±0.002)	4.0±0.10 (0.157±0.004)	2.0±0.05 (0.079±0.002)	25.0 (0.984)	-

Variable Dimensions — Millimeters (Inches)								
Tape Size	Pitch	A_0	B_0	F	P_1	T	W	D_1
8 mm	Half (2 mm)	0.37±0.03 (0.015±0.001)	0.67±0.03 (0.03±0.001)	3.5±0.05 (0.138±0.002)	2.0±0.05 (0.079±0.002)	0.42±0.03 (0.017±0.001)	8.0±0.10 (0.315±0.004)	-
		0.62±0.05 (0.025±0.002)	1.12±0.05 (0.04±0.002)			0.60±0.05 (0.024±0.002)		
8 mm	Single (4 mm)	1.00±0.10 (0.040±0.004)	1.80±0.10 (0.07±0.004)		4.0±0.10 (0.157±0.004)	0.95±0.05 (0.037±0.002)		
		1.50±0.10 (0.06±0.004)	2.30±0.10 (0.09±0.004)			0.95±0.05 (0.037±0.002)		

2. The tape with or without components shall pass around R without damage (see Figure 3).

Packaging Information Performance Notes

1. Cover Tape Break Force: 1.0 Kg minimum.
2. Cover Tape Peel Strength: The total peel strength of the cover tape from the carrier tape shall be:

Tape Width	Peel Strength
8 mm	0.1 to 1.0 newton (10 to 100 gf)
12 and 16 mm	0.1 to 1.3 newton (10 to 130 gf)

The direction of the pull shall be opposite the direction of the carrier tape travel. The pull angle of the carrier tape shall be 165° to 180° from the plane of the carrier tape. During peeling, the carrier and/or cover tape shall be pulled at a velocity of 300 ±10 mm/minute.
3. Labeling: Bar code labeling (standard or custom) shall be on the side of the reel opposite the sprocket holes. *Refer to EIA Standards 556 and 624*.

Figure 2 – Bending Radius

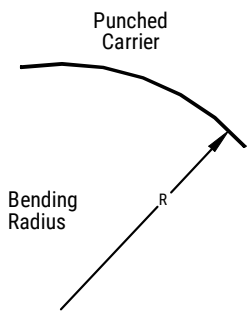

Figure 3 – Tape Leader & Trailer Dimensions

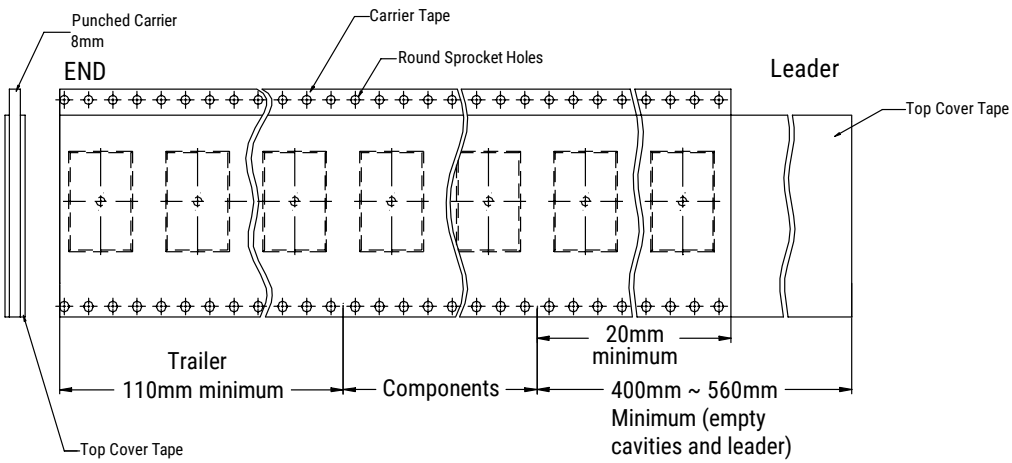

Figure 4 – Maximum Camber

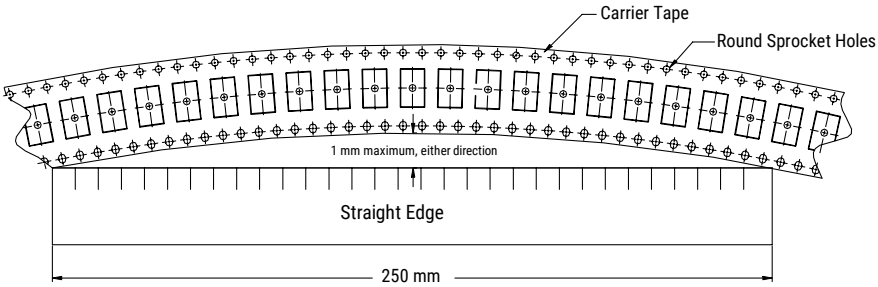

Figure 5 – Reel Dimensions

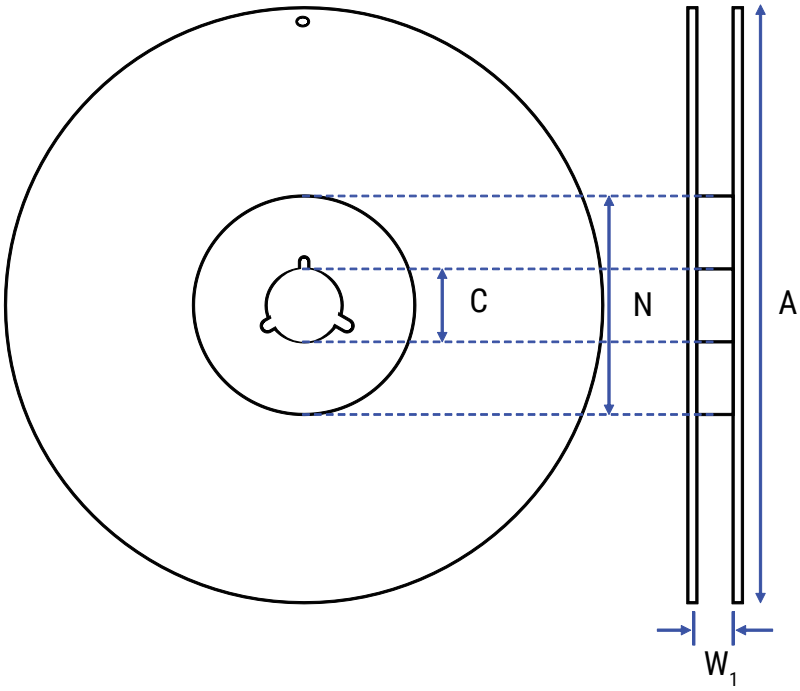

Table 6 – Reel Dimensions

Metric will govern

Constant Dimensions — Millimeters (Inches)			
Tape Size	Reel Size	A	C
8 mm	7	178 ±0.10 (7.008 ±0.004)	13.0 ±0.20 (0.512 ±0.008)
Variable Dimensions — Millimeters (Inches)			
Tape Size	Reel Size	W_1	
8 mm	60 ±0.10 (2.4 ±0.04)	8.4 +1.5/−0.0 (0.331 +0.059/−0.0)	

KEMET Electronics Corporation Sales Offices

For a complete list of our global sales offices, please visit www.kemet.com/sales.

Disclaimer

YAGEO Corporation and its affiliates do not recommend the use of commercial or automotive grade products for high reliability applications or manned space flight.

All product specifications, statements, information and data (collectively, the "Information") in this datasheet are subject to change. The customer is responsible for checking and verifying the extent to which the Information contained in this publication is applicable to an order at the time the order is placed. All Information given herein is believed to be accurate and reliable, but it is presented without guarantee, warranty, or responsibility of any kind, expressed or implied.

Statements of suitability for certain applications are based on KEMET Electronics Corporation's ("KEMET") knowledge of typical operating conditions for such applications, but are not intended to constitute – and KEMET specifically disclaims – any warranty concerning suitability for a specific customer application or use. The Information is intended for use only by customers who have the requisite experience and capability to determine the correct products for their application. Any technical advice inferred from this Information or otherwise provided by KEMET with reference to the use of KEMET's products is given gratis, and KEMET assumes no obligation or liability for the advice given or results obtained.

Although KEMET designs and manufactures its products to the most stringent quality and safety standards, given the current state of the art, isolated component failures may still occur. Accordingly, customer applications which require a high degree of reliability or safety should employ suitable designs or other safeguards (such as installation of protective circuitry or redundancies) in order to ensure that the failure of an electrical component does not result in a risk of personal injury or property damage.

Although all product–related warnings, cautions and notes must be observed, the customer should not assume that all safety measures are indicated or that other measures may not be required.

KEMET is a registered trademark of KEMET Electronics Corporation.

Looking for pricing, stock, or lifecycle information?

Click below to explore more details on WIN SOURCE:

- View CBR06C709C5GACAUTO on WIN SOURCE
- Kemet Information

Optimize Your Supply Chain with WIN SOURCE Solutions

- Global Sourcing Solution
- Obsolete Management
- Cost Control Management
- Shortage Management
- Alternative Solution
- Excess Inventory Management