HiQ CBR Series, C0G Dielectric, Low ESR
6.3 – 500 VDC, 1 MHz – 50 GHz (RF & Microwave)

Overview

KEMET's HiQ CBR RF Capacitor Series features a copper electrode BME (Base Metal Electrode) system that offers ultra-low ESR and High Q in the VHF, UHF, and microwave frequency bands. Low ESR allows for higher RF currents which are ideal for applications such as cellular base stations and telecommunication networks.

CBR Series capacitors exhibit no change in capacitance with respect to time and voltage, and boast a negligible change in capacitance with reference to ambient temperature.

HiQ-CBR RF & MICROWAVE

KEMET's HiQ CBR RF capacitors are characterized using ModelithicsTM substrate scalable models and is available in most EDA software. Contact KEMET Sales for details on accessing models.

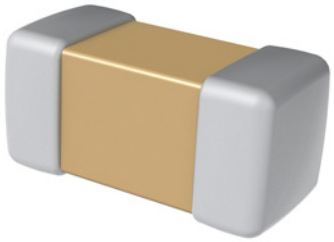

Benefits

- Ultra-low ESR and High Q
- High SRF
- High thermal stability
- 1 MHz to 50 GHz frequency range
- Operating temperature range of −55°C to +125°C
- Base metal electrode (BME) dielectric system
- Pb-free and RoHS compliant
- 0201, 0402, 0603 and 0805 case sizes (inches)
- DC voltage ratings from 6.3 – 500 V
- Capacitance offerings ranging from 0.1 pF up to 100 pF
- Available capacitance tolerances of ±0.05 pF, ±0.1 pF, ±0.25 pF, ±0.5 pF, ±1%, ±2%, and ±5%
- Negligible capacitance change with respect to temperature
- 100% pure matte tin-plated termination finish allowing for excellent solderability

Applications

- RF power amplifiers (PA)
- Cellular base stations (4G, 5G)
- Wireless LAN
- Telecommunication Networks
- GPS
- Bluetooth
- Bypass, coupling, filtering, impedance matching, DC blocking

© KEMET Electronics Corporation • One East Broward Boulevard
Fort Lauderdale, FL 33301 USA • 954-766-2800 • www.kemet.com

Ordering Information

CBR	02	C	330	F	9	G	A	C	
Series	Case Size (L"x W")	Specification/ Series	Capacitance Code (pF)	Capacitance Tolerance	Rated Voltage (VDC)	Dielectric	Termination Style	Termination Finish	Packaging/ Grade (C-Spec)
CBR	02 = 0201 04 = 0402 06 = 0603 08 = 0805	C = Standard	Two significant digits and number of zeros Use 9 for 1.0 – 9.9 pF Use 8 for 0.1 – 0.99 pF e.g., 2.2 pF = 229 e.g., 0.5 pF = 508	A = ±0.05 pF B = ±0.1 pF C = ±0.25 pF D = ±0.5 pF F = ±1% G = ±2% J = ±5%	9 = 6.3 V 8 = 10 V 3 = 25 V 5 = 50 V 1 = 100 V 2 = 200 V A = 250 V C = 500 V	G = C0G	A = N/A	C = 100% Matte Sn	See "Packaging C-Spec Ordering Options Table"

Tape & Reel Packaging Information

Packaging Type	Packaging Ordering Code (C-SPEC)
7" Reel	Blank
13" Reel	7411 (EIA 0603 and smaller case sizes) 7210 (EIA 0805 case size)

Environmental Compliance

Lead (Pb)-free, RoHS, and REACH compliant without exemptions

Dimensions – Millimeters (Inches)

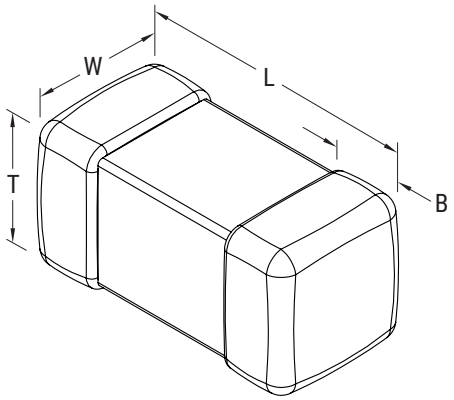

Case Size (in.)	Case Size (mm)	L Length	W Width	T Thickness	B Bandwidth	Mounting Technique
0201	0603	0.60±0.03 (0.024±0.001)	0.30±0.03 (0.012±0.001)	0.30±0.03 (0.012±0.001)	0.15±0.05 (0.006±0.002)	Solder Reflow Only
0402	1005	1.00±0.05 (0.040±0.002)	0.50±0.05 (0.020±0.002)	0.50±0.05 (0.020±0.002)	0.25+0.05/−0.10 (0.010+0.002/−0.004)	
0603	1608	1.60±0.10 (0.063±0.004)	0.80±0.10 (0.031±0.004)	0.80 ± 0.10 (0.031 ± 0.004)	0.40 ± 0.20 (0.016 ± 0.008)	Solder Wave or Solder Reflow
0805	2012	2.00±0.20 (0.079±0.008)	1.25±0.20 (0.049±0.008)	0.85 ± 0.10 (0.031 ± 0.004)	0.50 ± 0.25 (0.020 ± 0.010)	

Electrical Characteristics

SRF (MHz) vs. Cap (pF)

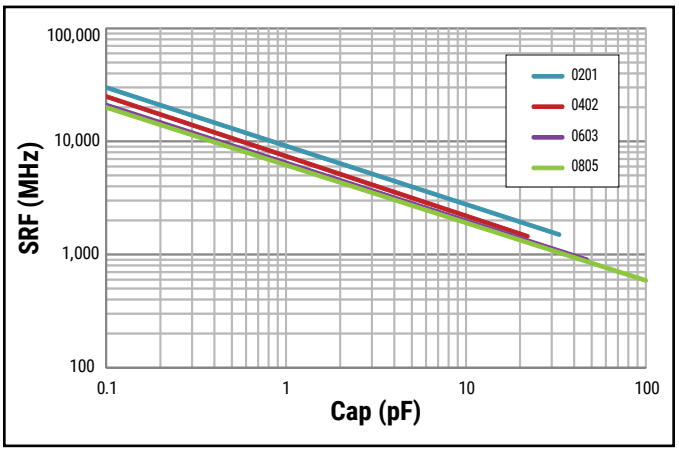

Table 1 – CBR Series, Capacitance Range Waterfall

Case Size – Inches (mm)		0201 (0603)					0402 (1005)					0603 (1608)			0805 (2012)			
Rated Voltage (VDC)		6.3	10	25	50	100	25	50	100	200	250	50	100	250	50	100	250	500
Voltage Code		9	8	3	5	1	3	5	1	2	A	5	1	A	5	1	A	C
Capacitance	Capacitance Tolerance	Capacitance Code (Available Capacitance)																
0.1 pF	A = ±0.05 pF B = ±0.1 pF	108*	108*	108*	108*	108*	108*	108*	108*	108*	108*							
0.2 pF		208	208	208	208	208	208	208	208	208	208	208	208	208	208	208	208	208
0.3 pF		308	308	308	308	308	308	308	308	308	308	308	308	308	308	308	308	308
0.4 pF		408	408	408	408	408	408	408	408	408	408	408	408	408	408	408	408	408
0.5 pF	A = ±0.05 pF B = ±0.1 pF C = ±0.25 pF	508	508	508	508	508	508	508	508	508	508	508	508	508	508	508	508	508
0.6 pF		608	608	608	608	608	608	608	608	608	608	608	608	608	608	608	608	608
0.7 pF		708	708	708	708	708	708	708	708	708	708	708	708	708	708	708	708	708
0.8 pF		808	808	808	808	808	808	808	808	808	808	808	808	808	808	808	808	808
0.9 pF		908	908	908	908	908	908	908	908	908	908	908	908	908	908	908	908	908
1.0 pF		109	109	109	109	109	109	109	109	109	109	109	109	109	109	109	109	109
1.1 pF		119	119	119	119	119	119	119	119	119	119	119	119	119	119	119	119	119
1.2 pF		129	129	129	129	129	129	129	129	129	129	129	129	129	129	129	129	129
1.3 pF		139	139	139	139	139	139	139	139	139	139	139	139	139	139	139	139	139
1.4 pF		149	149	149	149	149	149	149	149	149	149	149	149	149	149	149	149	149
1.5 pF		159	159	159	159	159	159	159	159	159	159	159	159	159	159	159	159	159
1.6 pF		169	169	169	169	169	169	169	169	169	169	169	169	169	169	169	169	169
1.7 pF		179	179	179	179	179	179	179	179	179	179	179	179	179	179	179	179	179
1.8 pF		189	189	189	189	189	189	189	189	189	189	189	189	189	189	189	189	189
1.9 pF		199	199	199	199	199	199	199	199	199	199	199	199	199	199	199	199	199
2.0 pF		209	209	209	209	209	209	209	209	209	209	209	209	209	209	209	209	209
2.1 pF		219	219	219	219	219	219	219	219	219	219	219	219	219	219	219	219	219
2.2 pF		229	229	229	229	229	229	229	229	229	229	229	229	229	229	229	229	229
2.3 pF		239	239	239	239	239	239	239	239	239	239	239	239	239	239	239	239	239
2.4 pF		249	249	249	249	249	249	249	249	249	249	249	249	249	249	249	249	249
2.5 pF		259	259	259	259	259	259	259	259	259	259	259	259	259	259	259	259	259
2.6 pF		269	269	269	269	269	269	269	269	269	269	269	269	269	269	269	269	269
2.7 pF		279	279	279	279	279	279	279	279	279	279	279	279	279	279	279	279	279
2.8 pF		289	289	289	289	289	289	289	289	289	289	289	289	289	289	289	289	289
2.9 pF		299	299	299	299	299	299	299	299	299	299	299	299	299	299	299	299	299
3.0 pF		309	309	309	309	309	309	309	309	309	309	309	309	309	309	309	309	309
3.1 pF		319	319	319	319	319	319	319	319	319	319	319	319	319	319	319	319	319
3.2 pF		329	329	329	329	329	329	329	329	329	329	329	329	329	329	329	329	329
3.3 pF		339	339	339	339	339	339	339	339	339	339	339	339	339	339	339	339	339
3.4 pF		349	349	349	349	349	349	349	349	349	349	349	349	349	349	349	349	349
3.5 pF		359	359	359	359	359	359	359	359	359	359	359	359	359	359	359	359	359
3.6 pF		369	369	369	369	369	369	369	369	369	369	369	369	369	369	369	369	369
3.7 pF		379	379	379	379	379	379	379	379	379	379	379	379	379	379	379	379	379
3.8 pF		389	389	389	389	389	389	389	389	389	389	389	389	389	389	389	389	389
3.9 pF		399	399	399	399	399	399	399	399	399	399	399	399	399	399	399	399	399
4.0 pF		409	409	409	409	409	409	409	409	409	409	409	409	409	409	409	409	409
4.1 pF		419	419	419	419	419	419	419	419	419	419	419	419	419	419	419	419	419
4.2 pF		429	429	429	429	429	429	429	429	429	429	429	429	429	429	429	429	429
4.3 pF		439	439	439	439	439	439	439	439	439	439	439	439	439	439	439	439	439
4.4 pF		449	449	449	449	449	449	449	449	449	449	449	449	449	449	449	449	449
4.5 pF		459	459	459	459	459	459	459	459	459	459	459	459	459	459	459	459	459
4.6 pF		469	469	469	469	469	469	469	469	469	469	469	469	469	469	469	469	469
4.7 pF		479	479	479	479	479	479	479	479	479	479	479	479	479	479	479	479	479
4.8 pF		489	489	489	489	489	489	489	489	489	489	489	489	489	489	489	489	489
4.9 pF		499	499	499	499	499	499	499	499	499	499	499	499	499	499	499	499	499
5.0 pF		509	509	509	509	509	509	509	509	509	509	509	509	509	509	509	509	509
Rated Voltage (VDC)		6.3	10	25	50	100	25	50	100	200	250	50	100	250	50	100	250	500
Voltage Code		9	8	3	5	1	3	5	1	2	A	5	1	A	5	1	A	C

** Available only in "B" (±0.1pF) capacitance tolerance.*

Table 1 – CBR Series, Capacitance Range Waterfall cont.

Case Size – Inches (mm)		0201 (0603)					0402 (1005)					0603 (1608)			0805 (2012)			
Rated Voltage (VDC)		6.3	10	25	50	100	25	50	100	200	250	50	100	250	50	100	250	500
Voltage Code		9	8	3	5	1	3	5	1	2	A	5	1	A	5	1	A	C
Capacitance	Capacitance Tolerance	Capacitance Code (Available Capacitance)																
5.1 pF	B = ±0.1 pF C = ±0.25 pF D = ±0.5 pF	519	519	519	519	519	519	519	519	519	519	519	519	519	519	519	519	519
5.2 pF		529	529	529	529	529	529	529	529	529	529	529	529	529	529	529	529	529
5.3 pF		539	539	539	539	539	539	539	539	539	539	539	539	539	539	539	539	539
5.4 pF		549	549	549	549	549	549	549	549	549	549	549	549	549	549	549	549	549
5.5 pF		559	559	559	559	559	559	559	559	559	559	559	559	559	559	559	559	559
5.6 pF		569	569	569	569	569	569	569	569	569	569	569	569	569	569	569	569	569
5.7 pF		579	579	579	579	579	579	579	579	579	579	579	579	579	579	579	579	579
5.8 pF		589	589	589	589	589	589	589	589	589	589	589	589	589	589	589	589	589
5.9 pF		599	599	599	599	599	599	599	599	599	599	599	599	599	599	599	599	599
6.0 pF		609	609	609	609	609	609	609	609	609	609	609	609	609	609	609	609	609
6.1 pF		619	619	619	619	619	619	619	619	619	619	619	619	619	619	619	619	619
6.2 pF		629	629	629	629	629	629	629	629	629	629	629	629	629	629	629	629	629
6.3 pF		639	639	639	639	639	639	639	639	639	639	639	639	639	639	639	639	639
6.4 pF		649	649	649	649	649	649	649	649	649	649	649	649	649	649	649	649	649
6.5 pF		659	659	659	659	659	659	659	659	659	659	659	659	659	659	659	659	659
6.6 pF		669	669	669	669	669	669	669	669	669	669	669	669	669	669	669	669	669
6.7 pF		679	679	679	679	679	679	679	679	679	679	679	679	679	679	679	679	679
6.8 pF		689	689	689	689	689	689	689	689	689	689	689	689	689	689	689	689	689
6.9 pF		699	699	699	699	699	699	699	699	699	699	699	699	699	699	699	699	699
7.0 pF		709	709	709	709	709	709	709	709	709	709	709	709	709	709	709	709	709
7.1 pF		719	719	719	719	719	719	719	719	719	719	719	719	719	719	719	719	719
7.2 pF		729	729	729	729	729	729	729	729	729	729	729	729	729	729	729	729	729
7.3 pF		739	739	739	739	739	739	739	739	739	739	739	739	739	739	739	739	739
7.4 pF		749	749	749	749	749	749	749	749	749	749	749	749	749	749	749	749	749
7.5 pF		759	759	759	759	759	759	759	759	759	759	759	759	759	759	759	759	759
7.6 pF		769	769	769	769	769	769	769	769	769	769	769	769	769	769	769	769	769
7.7 pF		779	779	779	779	779	779	779	779	779	779	779	779	779	779	779	779	779
7.8 pF		789	789	789	789	789	789	789	789	789	789	789	789	789	789	789	789	789
7.9 pF		799	799	799	799	799	799	799	799	799	799	799	799	799	799	799	799	799
8.0 pF		809	809	809	809	809	809	809	809	809	809	809	809	809	809	809	809	809
8.1 pF		819	819	819	819	819	819	819	819	819	819	819	819	819	819	819	819	819
8.2 pF		829	829	829	829	829	829	829	829	829	829	829	829	829	829	829	829	829
8.3 pF		839	839	839	839	839	839	839	839	839	839	839	839	839	839	839	839	839
8.4 pF		849	849	849	849	849	849	849	849	849	849	849	849	849	849	849	849	849
8.5 pF		859	859	859	859	859	859	859	859	859	859	859	859	859	859	859	859	859
8.6 pF		869	869	869	869	869	869	869	869	869	869	869	869	869	869	869	869	869
8.7 pF		879	879	879	879	879	879	879	879	879	879	879	879	879	879	879	879	879
8.8 pF		889	889	889	889	889	889	889	889	889	889	889	889	889	889	889	889	889
8.9 pF		899	899	899	899	899	899	899	899	899	899	899	899	899	899	899	899	899
9.0 pF		909	909	909	909	909	909	909	909	909	909	909	909	909	909	909	909	909
9.1 pF		919	919	919	919	919	919	919	919	919	919	919	919	919	919	919	919	919
9.2 pF		929	929	929	929	929	929	929	929	929	929	929	929	929	929	929	929	929
9.3 pF		939	939	939	939	939	939	939	939	939	939	939	939	939	939	939	939	939
9.4 pF		949	949	949	949	949	949	949	949	949	949	949	949	949	949	949	949	949
9.5 pF		959	959	959	959	959	959	959	959	959	959	959	959	959	959	959	959	959
9.6 pF		969	969	969	969	969	969	969	969	969	969	969	969	969	969	969	969	969
9.7 pF		979	979	979	979	979	979	979	979	979	979	979	979	979	979	979	979	979
9.8 pF		989	989	989	989	989	989	989	989	989	989	989	989	989	989	989	989	989
9.9 pF		999	999	999	999	999	999	999	999	999	999	999	999	999	999	999	999	999
Rated Voltage (VDC)		6.3	10	25	50	100	25	50	100	200	250	50	100	250	50	100	250	500
Voltage Code		9	8	3	5	1	3	5	1	2	A	5	1	A	5	1	A	C

Table 1 – CBR Series, Capacitance Range Waterfall cont.

Case Size – Inches (mm)		0201 (0603)					0402 (1005)					0603 (1608)			0805 (2012)			
Rated Voltage (VDC)		6.3	10	25	50	100	25	50	100	200	250	50	100	250	50	100	250	500
Voltage Code		9	8	3	5	1	3	5	1	2	A	5	1	A	5	1	A	C
Capacitance	Capacitance Tolerance	Capacitance Code (Available Capacitance)																
10 pF	F = ±1% G = ±2% J = ±5%	100	100	100	100	100	100	100	100	100	100	100	100	100	100	100	100	100
11 pF		110	110	110	110		110	110	110	110	110	110	110	110	110	110	110	110
12 pF		120	120	120	120		120	120	120	120	120	120	120	120	120	120	120	120
13 pF		130	130	130	130		130	130	130	130	130	130	130	130	130	130	130	130
15 pF		150	150	150	150		150	150	150	150	150	150	150	150	150	150	150	150
16 pF		160	160	160	160		160	160	160	160	160	160	160	160	160	160	160	160
18 pF		180	180	180	180		180	180	180	180	180	180	180	180	180	180	180	180
20 pF		200	200	200	200		200	200	200	200	200	200	200	200	200	200	200	200
22 pF		220	220	220	220		220	220	220	220	220	220	220	220	220	220	220	220
24 pF		240	240	240	240		240	240	240	240	240	240	240	240	240	240	240	240
27 pF		270	270	270	270		270	270	270	270	270	270	270	270	270	270	270	270
30 pF		300	300	300	300		300	300	300	300	300	300	300	300	300	300	300	300
33 pF		330	330	330	330		330	330	330	330	330	330	330	330	330	330	330	330
36 pF		360	360	360	360		360	360	360	360	360	360	360	360	360	360	360	360
39 pF		390	390	390	390		390	390	390	390	390	390	390	390	390	390	390	390
43 pF							430	430	430	430	430	430	430	430	430	430	430	430
47 pF							470	470	470	470	470	470	470	470	470	470	470	470
51 pF							510	510	510	510	510	510	510	510	510	510	510	510
56 pF							560	560	560	560	560	560	560	560	560	560	560	560
62 pF							620	620	620	620	620	620	620	620	620	620	620	620
68 pF							680	680	680	680	680	680	680	680	680	680	680	680
75 pF							750	750	750	750	750	750	750	750	750	750	750	
82 pF							820	820	820	820	820	820	820	820	820	820	820	
91 pF							910	910	910	910	910	910	910	910	910	910	910	
100 pF							101	101	101	101	101	101	101	101	101	101	101	
Rated Voltage (VDC)		6.3	10	25	50	100	25	50	100	200	250	50	100	250	50	100	250	500
Voltage Code		9	8	3	5	1	3	5	1	2	A	5	1	A	5	1	A	C

Table 2 – Chip Thickness/Reeling Quantities

Chip Size Inches (mm)	Chip Thickness (mm)	Reel Quantity	
		7" Paper	13" Paper
0201 (0603)	0.30 ±0.03	15,000	50,000
0402 (1005)	0.50 ±0.05	10,000	50,000
0603 (1608)	0.80 ±0.10	4,000	15,000
0805 (2012)	0.85 ±0.10	4,000	15,000

Table 3 – Chip Capacitor Land Pattern Design Recommendations per IPC–7351 (mm)

Case Size (Inches)	Case Size (mm)	Density Level A: Maximum (Most) Land Protrusion					Density Level B: Median (Nominal) Land Protrusion					Density Level C: Minimum (Least) Land Protrusion				
		C	Y	X	V1	V2	C	Y	X	V1	V2	C	Y	X	V1	V2
0201	0603	0.38	0.56	0.52	1.80	1.00	0.33	0.46	0.42	1.50	0.80	0.28	0.36	0.32	1.20	0.60
0402	1005	0.50	0.72	0.72	2.20	1.20	0.45	0.62	0.62	1.90	1.00	0.40	0.52	0.52	1.60	0.80
0603	1608	0.90	1.15	1.10	4.00	2.10	0.80	0.95	1.00	3.10	1.50	0.60	0.75	0.90	2.40	1.20
0805	2012	1.00	1.35	1.55	4.40	2.60	0.90	1.15	1.45	3.50	2.00	0.75	0.95	1.35	2.80	1.70

Density Level A: *For low-density product applications. Recommended for wave solder applications and provides a wider process window for reflow solder processes. KEMET only recommends wave soldering of 0603(1608) and 0805 (2012) case sizes.*
Density Level B: *For products with a moderate level of component density. Provides a robust solder attachment condition for reflow solder processes.*
Density Level C: *For high component density product applications. Before adapting the minimum land pattern variations the user should perform qualification testing based on the conditions outlined in IPC Standard 7351 (IPC–7351).*

Image below based on Density Level B for an EIA 1608 case size.

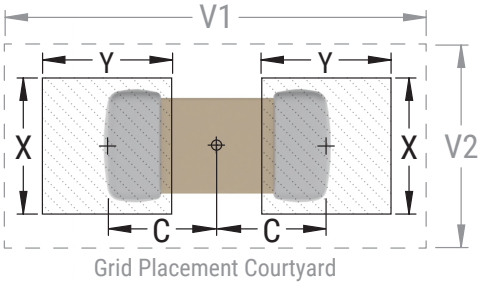

Soldering Process

Recommended Soldering Technique:

- Solder wave or solder reflow for EIA case sizes 0603, 0805, and 1206
- All other EIA case sizes are limited to solder reflow only

Recommended Reflow Soldering Profile:

The KEMET families of surface mount multilayer ceramic capacitors (SMD MLCCs) are compatible with wave (single or dual), convection, IR or vapor phase reflow techniques. Preheating of these components is recommended to avoid extreme thermal stress. KEMET's recommended profile conditions for convection and IR reflow reflect the profile conditions of the IPC/J-STD-020 standard for moisture sensitivity testing. These devices can safely withstand a maximum of three reflow passes at these conditions.

Profile Feature	Termination Finish
	100% Matte Sn
Preheat/Soak Temperature Minimum (T_{Smin}) Temperature Maximum (T_{Smax}) Time (t_S) from T_{Smin} to T_{Smax}	 150°C 200°C 60 – 120 seconds
Ramp-Up Rate (T_L to T_P)	3°C/second maximum
Liquidous Temperature (T_L)	217°C
Time Above Liquidous (t_L)	60 – 150 seconds
Peak Temperature (T_P)	260°C
Time Within 5°C of Maximum Peak Temperature (t_P)	30 seconds maximum
Ramp-Down Rate (T_P to T_L)	6°C/second maximum
Time 25°C to Peak Temperature	8 minutes maximum

Note: All temperatures refer to the center of the package, measured on the capacitor body surface that is facing up during assembly reflow.

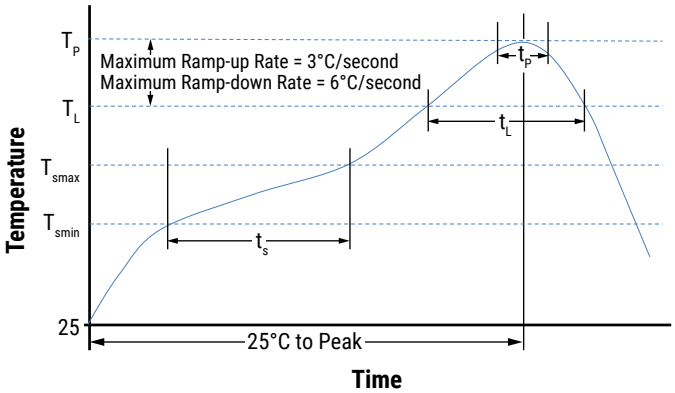

Table 4 – Performance & Reliability: Test Methods & Conditions

<table>
<tr><th>Test</th><th>Test Condition</th><th>Limits</th></tr>
<tr><td>Capacitance (Cap)</td><td>1 MHz ±100 kHz and 1.0 ±0.2 V_{RMS}</td><td>Within Tolerance</td></tr>
<tr><td>Quality Factor (Q)</td><td>1 MHz ±100 kHz and 1.0 ±0.2 V_{RMS}</td><td>≥ 1,000 for capacitance values ≥ 30 pF
≥ 400 + 20C for capacitance values < 30 pF
(C = Capacitance in pF)</td></tr>
<tr><td>Insulation Resistance</td><td>Apply rated voltage for 120 seconds at 25°C</td><td>10 GΩ minimum</td></tr>
<tr><td>Temperature Coefficient of Capacitance (TCC)</td><td>1 MHz ±100 kHz and 1.0 ±0.2 V_{RMS}</td><td>0 ± 30 PPM/°C
(0 ± 60PPM/°C for 0201 case size product ≥ 22 pF)</td></tr>
<tr><td>Dielectric Withstanding Voltage (DWV)</td><td><table><tr><th>Voltage</th><th>DWV Voltage</th></tr><tr><td><100 V</td><td>250%</td></tr><tr><td>200 V</td><td>200%</td></tr><tr><td>250 V</td><td>200%</td></tr><tr><td>500 V</td><td>150%</td></tr></table>(5 ±1 seconds and charge/discharge not exceeding 50 mA)</td><td>Cap: Initial Limit
DF: Initial Limit
IR: Initial Limit

Withstand test voltage without insulation breakdown or damage</td></tr>
<tr><td>Aging Rate</td><td>Capacitance measurements are indexed to a referee time of 1,000 hours.</td><td>0%</td></tr>
<tr><td>Terminal Strength</td><td><table><tr><th>Case Size</th><th>Force</th></tr><tr><td>0201</td><td>2N</td></tr><tr><td>0402</td><td>5N</td></tr><tr><td>0603</td><td>5N</td></tr><tr><td>0805</td><td>10N</td></tr></table>Terminal strength test per specific case size,
Time: 10±1 seconds</td><td>No evidence of mechanical damage</td></tr>
<tr><td>Solderability</td><td>Solder Temperature: 245 ±5°C
Dipping Time: 3 ±0.5 seconds</td><td>95% minimum coverage of termination finish.</td></tr>
<tr><td>Board Flex</td><td>Capacitor is mounted to a substrate which is flexed by means of ram at a rate of 1 mm per second until the deflection becomes 1 mm. (Deflection is maintained for 5 ±1 second)
Store at room temperature for 24 ±2 hours before measuring electrical properties.</td><td>No visible damage.
Capacitance change: within ±5.0% or ±0.5 pF, whichever is larger.
(Capacitance change is monitored during flexure.)</td></tr>
<tr><td>Resistance to Soldering Heat</td><td>Solder Temperature: 260 ±5°C
Dipping Time: 10 ±1 second
Preheating: 120 to 150°C for 1 minute before immerse the capacitor in a eutectic solder.
Store at room temperature for 24 ±2 hours before measuring electrical properties.</td><td>No visible damage.
Capacitance change: within ±2.5% or ±0.25 pF, whichever is larger.
Q/DF, IR and dielectric strength: To meet initial requirements.
25% maximum leaching on each edge.</td></tr>
</table>

Table 4 – Performance & Reliability: Test Methods & Conditions cont.

<table>
<tr><th>Test</th><th>Test Condition</th><th>Limits</th></tr>
<tr><td rowspan="2">Temperature Cycling</td><td>5 cycles of steps 1 - 4:
<table>
<tr><th>Step</th><th>Temperature (°C)</th><th>Time (min.)</th></tr>
<tr><td>1</td><td>Minimum operating temperature +0/−3</td><td>30 ±3</td></tr>
<tr><td>2</td><td>Room temperature</td><td>2 ~ 3</td></tr>
<tr><td>3</td><td>Maximum operating temperature +3/−0</td><td>30 ±3</td></tr>
<tr><td>4</td><td>Room temperature (25°C)</td><td>2 ~ 3</td></tr>
</table></td><td rowspan="2">No visible damage.
Capacitance change: within ±2.5% or ±0.25 pF, whichever is larger.
Q/DF, IR and dielectric strength: To meet initial requirements.</td></tr>
<tr><td>Store at room temperature for 24 ±2 hours before measuring electrical properties.</td></tr>
<tr><td>Humidity (Damp Heat) Load</td><td>Test temperature: 40 ±2°C
Humidity: 90 ~ 95% RH
Test Time: 500 +24/−0 hours
Applied Voltage: Rated voltage
Store at room temperature for 24 ±2 hours before measuring electrical properties.</td><td>No visible damage.
Capacitance change: within ±7.5% or ±0.75 pF, whichever is larger.
Q value: Capacitance ≥ 30 pF, Q ≥ 200,
Capacitance < 30 pF, Q ≥ 100+10/3°C
IR: ≥ 500 MΩ</td></tr>
<tr><td>High Temperature Life</td><td>Test temperature: 125 ±3°C
Applied Voltage:
200% of rated voltage (6.3 VDC – 100 VDC)
150% of rated voltage (200 VDC and 500 VDC)
Test Time: 1,000 +24/−0 hours
Store at room temperature for 24 ±2 hours before measuring electrical properties.</td><td>No visible damage.
Capacitance change: within ±3.0% or ±0.3 pF, whichever is larger.
Q/DF value: Capacitance ≥ 30 pF, Q ≥350,
10 pF ≤ Capacitance < 30 pF, Q ≥ 275 +5°C
Capacitance <10 pF, Q ≥ 200 +10°C
IR: ≥1 GΩ</td></tr>
<tr><td rowspan="2">ESR</td><td>The ESR should be measured at room temperature and tested at frequency 1 ±0.1 GHz.</td><td>
<table>
<tr><th>0201 Case Size</th><th>0402 Case Size</th></tr>
<tr><td>0.1 pF ≤ Capacitance ≤ 1 pF: < 350 mΩ/pF</td><td>0.1 pF ≤ Capacitance ≤ 1 pF: < 350 mΩ/pF</td></tr>
<tr><td>1.0 pF < Capacitance ≤ 5.0 pF: < 300 mΩ</td><td>1.0 pF < Capacitance ≤ 5.0 pF: < 300 mΩ</td></tr>
<tr><td>5.0 pF < Capacitance ≤ 22.0 pF: < 250 mΩ</td><td>5.0 pF < Capacitance ≤ 100 pF: < 250 mΩ</td></tr>
<tr><th>0603 Case Size</th><th>0805 Case Size</th></tr>
<tr><td>0.3 pF ≤ Capacitance ≤ 1 pF: < 1,500 mΩ</td><td>0.3 pF ≤ Capacitance ≤ 1 pF: < 1,500 mΩ</td></tr>
<tr><td>1 pF < Capacitance ≤ 10 pF: < 250 mΩ</td><td>1 pF < Capacitance ≤ 10 pF: < 250 mΩ</td></tr>
<tr><td>10 pF < Capacitance ≤ 100 pF: < 200 mΩ</td><td>Capacitance > 10 pF: < 200 mΩ</td></tr>
</table></td></tr>
<tr><td>The ESR should be measured at room temperature and tested at frequency 500 ±50 MHz.</td><td>0201 case size, 22 pF ≤ Cap ≤ 33 pF: < 300 mΩ</td></tr>
</table>

Storage and Handling

Ceramic chip capacitors should be stored in normal working environments. While the chips themselves are quite robust in other environments, solderability will be degraded by exposure to high temperatures, high humidity, corrosive atmospheres, and long term storage. In addition, packaging materials will be degraded by high temperature–reels may soften or warp and tape peel force may increase. KEMET recommends that maximum storage temperature not exceed 40°C and maximum storage humidity not exceed 70% relative humidity. Temperature fluctuations should be minimized to avoid condensation on the parts and atmospheres should be free of chlorine and sulfur bearing compounds. For optimized solderability chip stock should be used promptly, preferably within 1.5 years of receipt.

Construction

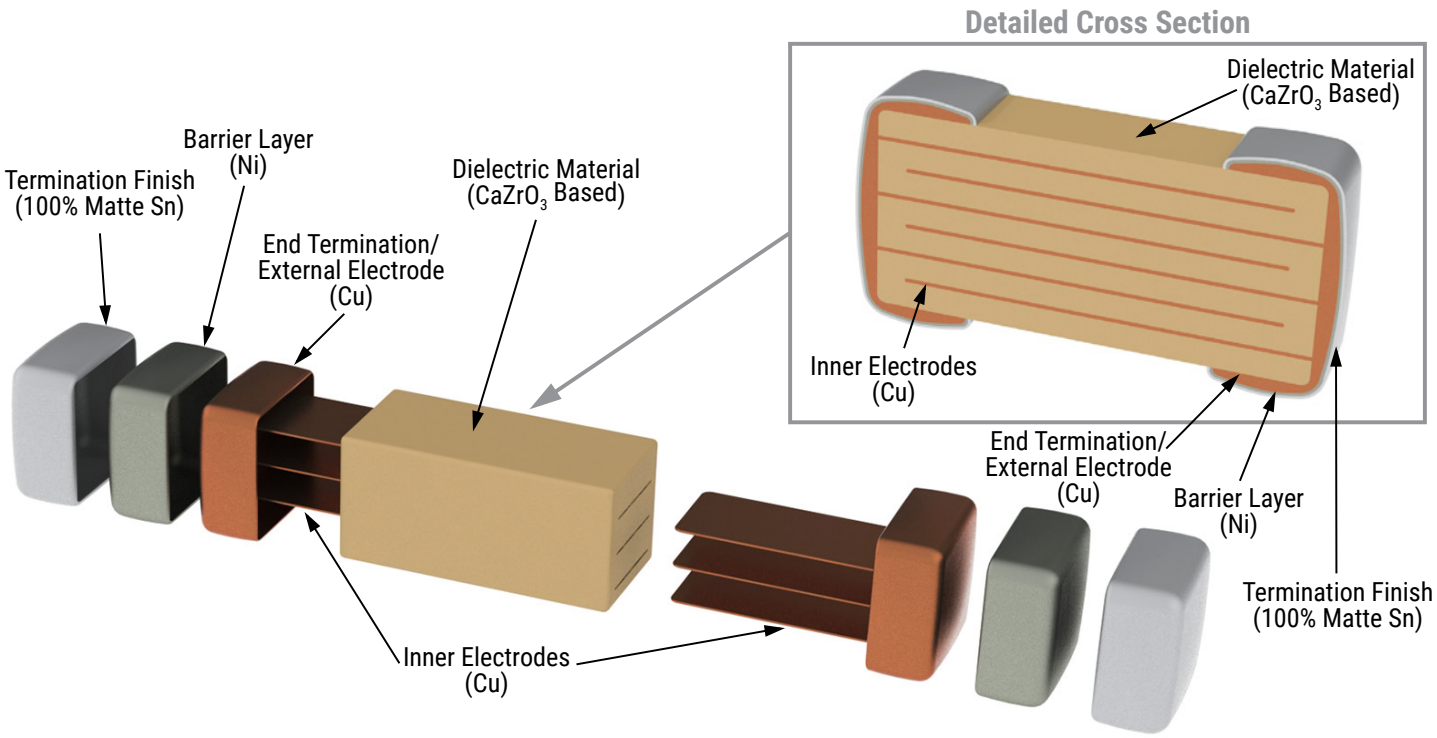

Tape & Reel Packaging Information

KEMET offers RF and Microwave Multilayer Ceramic Chip Capacitors packaged in 8 mm tape on 7" reels in accordance with EIA Standard 481. This packaging system is compatible with all tape-fed automatic pick and place systems.

Table 5 – Carrier Tape Configuration (mm)

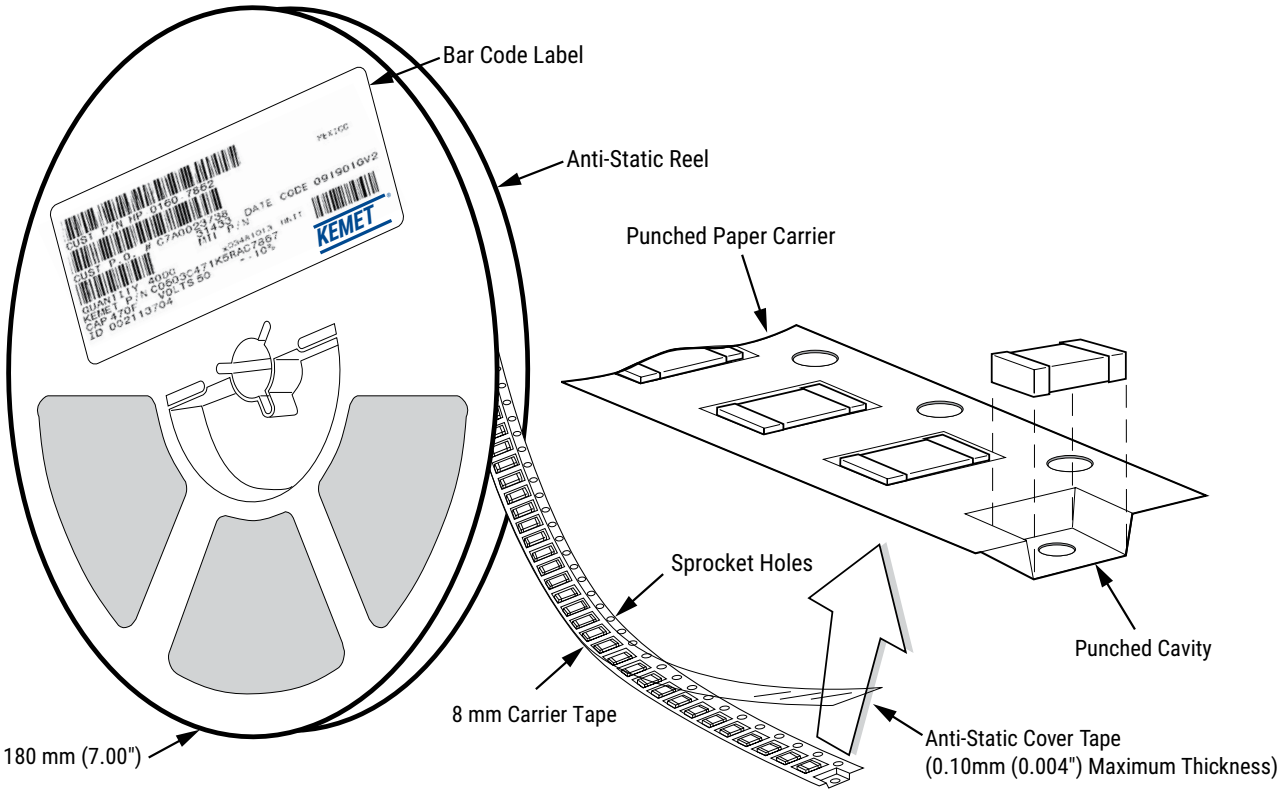

EIA Case Size	Tape Size (W)*	Lead Space (P_1)*
0201 – 0402	8	2
0603 – 1210	8	4

**Refer to Figure 1 for W and P_1 carrier tape reference locations.*
**Refer to Table 6 for tolerance specifications.*

Figure 1 – Punched (Paper) Carrier Tape Dimensions

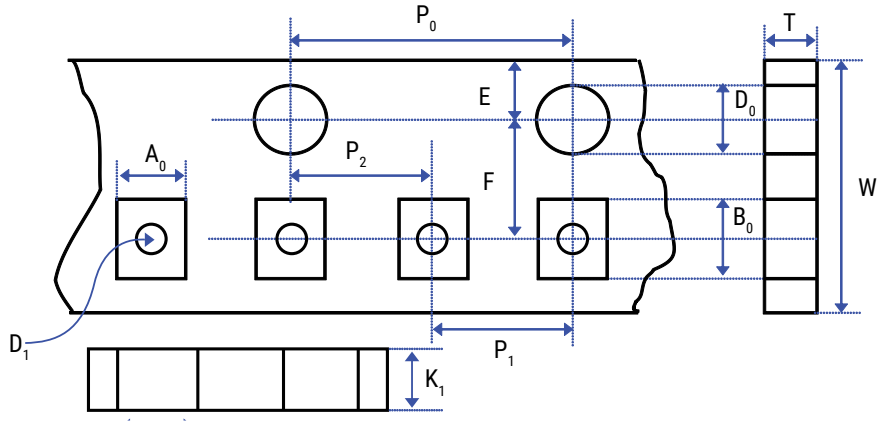

Table 6 – Punched (Paper) Carrier Tape Dimensions

Metric will govern

Constant Dimensions — Millimeters (Inches)						
Tape Size	D_0	E_1	P_0	P_2	R Reference Note 2	K_0
8 mm	1.55+0.05 (0.061+0.002)	1.55±0.05 (0.061±0.002)	4.0±0.10 (0.157±0.004)	2.0±0.05 (0.079±0.002)	25.0 (0.984)	-

Variable Dimensions — Millimeters (Inches)								
Tape Size	Pitch	A_0	B_0	F	P_1	T	W	D_1
8 mm	Half (2 mm)	0.37±0.03 (0.015±0.001)	0.67±0.03 (0.03±0.001)	3.5±0.05 (0.138±0.002)	2.0±0.05 (0.079±0.002)	0.42±0.03 (0.017±0.001)	8.0±0.10 (0.315±0.004)	-
		0.62±0.05 (0.025±0.002)	1.12±0.05 (0.04±0.002)			0.60±0.05 (0.024±0.002)		
8 mm	Single (4 mm)	1.00±0.10 (0.040±0.004)	1.80±0.10 (0.07±0.004)		4.0±0.10 (0.157±0.004)	0.95±0.05 (0.037±0.002)		
		1.50±0.10 (0.06±0.004)	2.30±0.10 (0.09±0.004)			0.95±0.05 (0.037±0.002)		

2. The tape with or without components shall pass around R without damage (see Figure 3).

Packaging Information Performance Notes

1. Cover Tape Break Force: 1.0 Kg minimum.
2. Cover Tape Peel Strength: The total peel strength of the cover tape from the carrier tape shall be:

Tape Width	Peel Strength
8 mm	0.1 to 1.0 newton (10 to 100 gf)
12 and 16 mm	0.1 to 1.3 newton (10 to 130 gf)

The direction of the pull shall be opposite the direction of the carrier tape travel. The pull angle of the carrier tape shall be 165° to 180° from the plane of the carrier tape. During peeling, the carrier and/or cover tape shall be pulled at a velocity of 300 ±10 mm/minute.
3. Labeling: Bar code labeling (standard or custom) shall be on the side of the reel opposite the sprocket holes. *Refer to EIA Standards 556 and 624*.

Figure 2 – Bending Radius

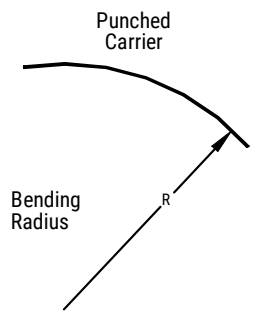

Figure 3 – Tape Leader & Trailer Dimensions

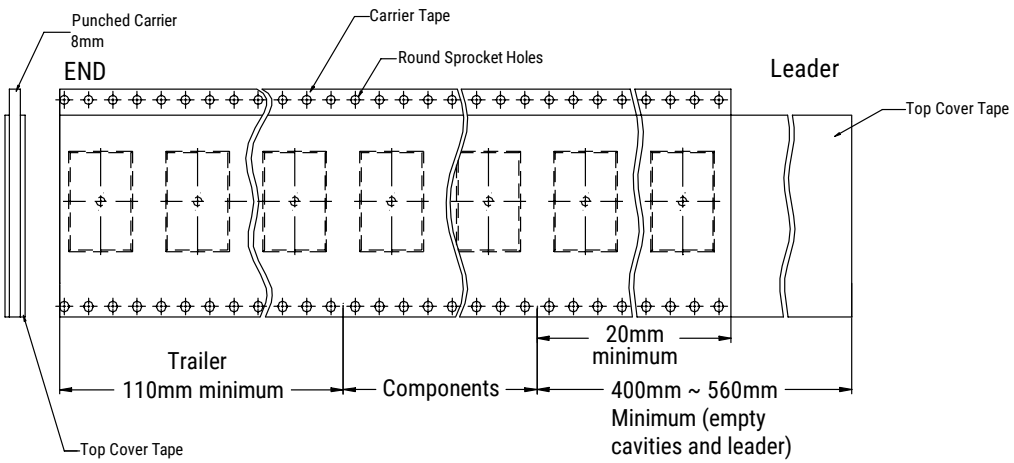

Figure 4 – Maximum Camber

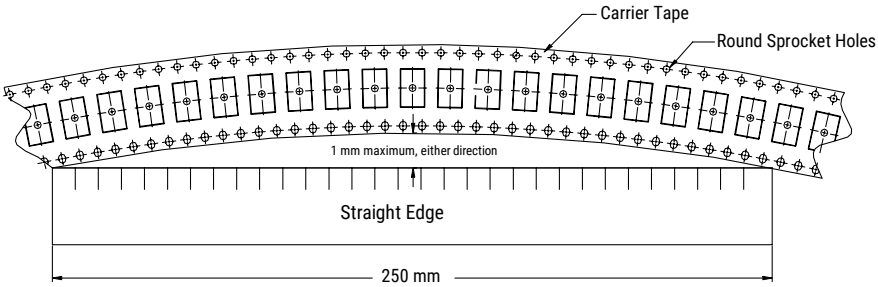

Figure 5 – Reel Dimensions

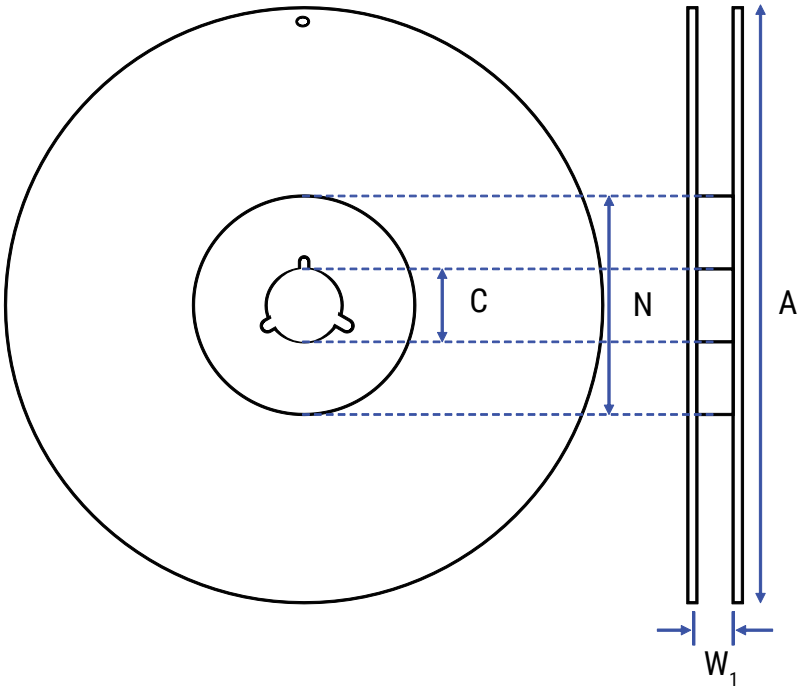

Table 7 – Reel Dimensions

Metric will govern

Constant Dimensions — Millimeters (Inches)			
Tape Size	Reel Size	A	C
8 mm	7	178±0.10 (7.008±0.004)	13.0±0.20 (0.512±0.008)
Variable Dimensions — Millimeters (Inches)			
Tape Size	N Minimum See Note 2, Table 6	W_1	
8 mm	60±0.10 (2.4±0.04)	8.4+1.5/−0.0 (0.331+0.059/−0.0)	

KEMET Electronics Corporation Sales Offices

For a complete list of our global sales offices, please visit www.kemet.com/sales.

Disclaimer

YAGEO Corporation and its affiliates do not recommend the use of commercial or automotive grade products for high reliability applications or manned space flight.

All product specifications, statements, information and data (collectively, the "Information") in this datasheet are subject to change. The customer is responsible for checking and verifying the extent to which the Information contained in this publication is applicable to an order at the time the order is placed. All Information given herein is believed to be accurate and reliable, but it is presented without guarantee, warranty, or responsibility of any kind, expressed or implied.

Statements of suitability for certain applications are based on KEMET Electronics Corporation's ("KEMET") knowledge of typical operating conditions for such applications, but are not intended to constitute – and KEMET specifically disclaims – any warranty concerning suitability for a specific customer application or use. The Information is intended for use only by customers who have the requisite experience and capability to determine the correct products for their application. Any technical advice inferred from this Information or otherwise provided by KEMET with reference to the use of KEMET's products is given gratis, and KEMET assumes no obligation or liability for the advice given or results obtained.

Although KEMET designs and manufactures its products to the most stringent quality and safety standards, given the current state of the art, isolated component failures may still occur. Accordingly, customer applications which require a high degree of reliability or safety should employ suitable designs or other safeguards (such as installation of protective circuitry or redundancies) in order to ensure that the failure of an electrical component does not result in a risk of personal injury or property damage.

Although all product–related warnings, cautions and notes must be observed, the customer should not assume that all safety measures are indicated or that other measures may not be required.

KEMET is a registered trademark of KEMET Electronics Corporation.

Looking for pricing, stock, or lifecycle information?

Click below to explore more details on WIN SOURCE:

- View CBR04C129B5GAC on WIN SOURCE
- Kemet Information

Optimize Your Supply Chain with WIN SOURCE Solutions

- Global Sourcing Solution
- Obsolete Management
- Cost Control Management
- Shortage Management
- Alternative Solution
- Excess Inventory Management