Overview

KEMET's X7R dielectric features a 125°C maximum operating temperature and is considered temperature stable. The Electronics Components, Assemblies and Materials Association (EIA) characterizes X7R dielectric as a Class II material. Components of this classification are fixed, ceramic dielectric capacitors suited for bypass and decoupling applications or for frequency discriminating circuits where Q and stability of capacitance characteristics are not critical. X7R exhibits a predictable change in capacitance with respect to time and voltage, boasting a minimal change in capacitance with reference to ambient temperature. Capacitance change is limited to ±15% from −55°C to +125°C.

Benefits

- −55°C to +125°C operating temperature range
- Lead (Pb)-free, RoHS, and REACH Compliant
- Temperature stable dielectric
- EIA 0402, 0603, 0805, 1206, 1210, 1808, 1812, 1825, 2220, and 2225 case sizes
- DC voltage ratings of 6.3 V, 10 V, 16 V, 25 V, 35 V, 50 V, 100 V, 200 V, and 250 V
- Capacitance offerings ranging from 10 pF to 47 µF
- Available capacitance tolerances of ±5%, ±10%, and ±20%
- Non-polar device, minimizing installation concerns
- 100% pure matte tin-plated termination finish allowing for excellent solderability
- SnPb termination finish option available upon request (5% Pb minimum)

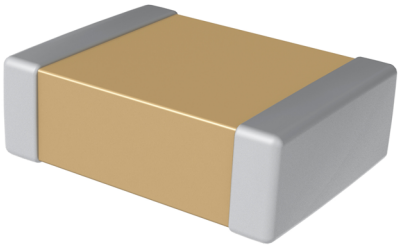

Applications

Typical applications include decoupling, bypass, filtering and transient voltage suppression.

Ordering Information

C	1206	C	106	M	4	R	A	C	TU
Ceramic	Case Size (L" x W")	Specification/ Series[1]	Capacitance Code (pF)	Capacitance Tolerance	Rated Voltage (VDC)	Dielectric	Failure Rate/ Design	Termination Finish[2]	Packaging/ Grade (C-Spec)
	0402 0603 0805 1206 1210 1805 1808 1812 1825 2220 2225	C = Standard	Two significant digits and number of zeros.	J = ±5% K = ±10% M = ±20%	9 = 6.3 8 = 10 4 = 16 3 = 25 6 = 35 5 = 50 1 = 100 2 = 200 A = 250	R = X7R	A = N/A	C = 100% Matte Sn	See "Packaging C-Spec Ordering Options Table"

[1] Flexible termination option is available. Please see FT-CAP product bulletin C1013_X7R_FT-CAP_SMD.
[2] Additional termination finish options may be available. Contact KEMET for details.

Packaging C-Spec Ordering Options Table

Packaging Type[1]	Packaging/Grade Ordering Code (C-Spec)
Bulk Bag/Unmarked	Not required (Blank)
7" Reel/Unmarked	TU
13" Reel/Unmarked	7411 (EIA 0603 and smaller case sizes) 7210 (EIA 0805 and larger case sizes)
7" Reel/Marked	TM
13" Reel/Marked	7040 (EIA 0603) 7215 (EIA 0805 and larger case sizes)

[1] Default packaging is "Bulk Bag." An ordering code C-Spec is not required for "Bulk Bag" packaging.
[1] The terms "Marked" and "Unmarked" pertain to laser marking option of capacitors. All packaging options labeled as "Unmarked" will contain capacitors that have not been laser marked. Please contact KEMET if you require a laser marked option. For more information see "Capacitor Marking."

Dimensions – Millimeters (Inches)

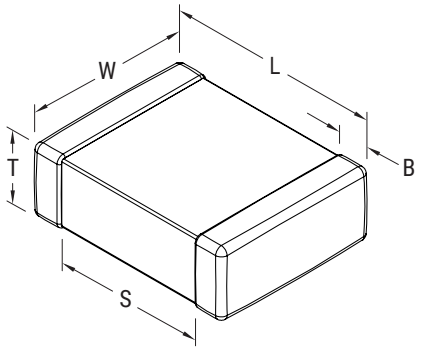

EIA Size Code	Metric Size Code	L Length	W Width	T Thickness	B Bandwidth	S Separation Minimum	Mounting Technique
[1]0402	1005	1.00 (0.040) ±0.05 (0.002)	0.50 (0.020) ±0.05 (0.002)	See Table 2 for Thickness	0.30 (0.012) ±0.10 (0.004)	0.30 (0.012)	Solder reflow only
[2]0603	1608	1.60 (0.063) ±0.15 (0.006)	0.80 (0.032) ±0.15 (0.006)		0.35 (0.014) ±0.15 (0.006)	0.50 (0.020)	Solder wave or Solder reflow
[3]0805	2012	2.00 (0.079) ±0.20 (0.008)	1.25 (0.049) ±0.20 (0.008)		0.50 (0.02) ±0.25 (0.010)	0.70 (0.028)	
[4]1206	3216	3.20 (0.126) ±0.20 (0.008)	1.60 (0.063) ±0.20 (0.008)		0.50 (0.02) ±0.25 (0.010)	1.50 (0.060)	
[5]1210	3225	3.20 (0.126) ±0.20 (0.008)	2.50 (0.098) ±0.20 (0.008)		0.50 (0.02) ±0.25 (0.010)	1.50 (0.060)	Solder reflow only
1805	4513	4.50 (0.177) ±0.50 (0.020)	1.27 (0.050) ±0.38 (0.015)		0.60 (0.024) ±0.35 (0.014)	2.90 (0.114)	
1808	4520	4.70 (0.185) ±0.50 (0.020)	2.00 (0.079) ±0.20 (0.008)		0.60 (0.024) ±0.35 (0.014)	2.90 (0.114)	
1812	4532	4.50 (0.177) ±0.30 (0.012)	3.20 (0.126) ±0.30 (0.012)		0.60 (0.024) ±0.35 (0.014)	2.30 (0.091)	
1825	4564	4.50 (0.177) ±0.30 (0.012)	6.40 (0.252) ±0.40 (0.016)		0.60 (0.024) ±0.35 (0.014)	2.30 (0.091)	
2220	5650	5.70 (0.224) ±0.40 (0.016)	5.00 (0.197) ±0.40 (0.016)		0.60 (0.024) ±0.35 (0.014)	3.50 (0.138)	
2225	5664	5.60 (0.220) ±0.40 (0.016)	6.40 (0.248) ±0.40 (0.016)		0.60 (0.024) ±0.35 (0.014)	3.20 (0.126)	

[1] For capacitance values ≥ 5.6 nF 100V add 0.05 (0.002) to the length and width tolerance dimension

[2] For capacitance capacitance value 0.22 µF 50V add 0.10 (0.004) to length. For capacitance capacitance value 4.7 µF add 0.10 (0.004) to length and add 0.05 (0.002) to width

[3] For capacitance values ≥ 2.2 µF add 0.10 (0.004) to the length tolerance dimension.

[4] For capacitance value 10 uF 16V add 0.10 (0.004) to the length tolerance dimension. For capacitance value 10 nF <=250V add 0.10 (0.004) to the length tolerance dimension. For capacitance value 100 nF 250V & 200V add 0.10 (0.004) to the length tolerance dimension.

[5] For Capacitance value 1.0uF ≤ 50V add 0.20 (0.008) to Length tolerance dimension and to Width tolerance dimension add 0.10 (0.004), For Capacitance value 1.0uF 100V add 0.10 (0.004) to Length tolerance dimension. For capacitance value 2.2uF 100V add 0.10 to the Length tolerance dimension, for capacitance values ≥ 4.7 µF add 0.02 (0.001) to the width tolerance dimension and 0.10 (0.004) to the length tolerance dimension, except for capacitance value 10uF 25V and 50V add 0.10 (0.004) to the width tolerance dimension and 0.20 (0.008) to the length tolerance dimension. For capacitance value 220 nF ≤ 50V add 0.10 (0.004) to the width tolerance dimension.

Qualification/Certification

Commercial Grade products are subject to internal qualification. Details regarding test methods and conditions are referenced in Table 4, Performance & Reliability.

Environmental Compliance

Lead (Pb)-free, RoHS, and REACH compliant without exemptions.

RoHS

REACH COMPLIANT

Lead-free

Table 1A – Capacitance Range/Selection Waterfall (0402 – 1206 Case Sizes)

Cap	Cap Code	Case Size/ Series			C0402C						C0603C								C0805C									C1206C								
		Voltage Code			9	8	4	3	5	1	9	8	4	3	5	1	2	A	9	8	4	3	6	5	1	2	A	9	8	4	3	6	5	1	2	A
		Rated Voltage (VDC)			6.3	10	16	25	50	100	6.3	10	16	25	50	100	200	250	6.3	10	16	25	35	50	100	200	250	6.3	10	16	25	35	50	100	200	250
		Cap Tolerance			Product Availability and Chip Thickness Codes – See Table 2 for Chip Thickness Dimensions																																
10 - 20 pF*	100 - 200*	J	K	M	BB	BB	BB	BB	BB		CF	CF	CF	CF	CF	CF	CF		DN	DN	DN	DN	DN	DN	DN	DN		EB	EB	EB	EB	EB	EB	EB	EB	
22 pF	220	J	K	M	BB	BB	BB	BB	BB		CF	CF	CF	CF	CF	CF	CF		DM	DM	DM	DM	DM	DM	DN	DN		EB	EB	EB	EB	EB	EB	EB	EB	
24 - 91pF	240 - 910*	J	K	M	BB	BB	BB	BB	BB		CF	CF	CF	CF	CF	CF	CF		DN	DN	DN	DN	DN	DN	DN	DN		EB	EB	EB	EB	EB	EB	EB	EB	
100 - 150 pF**	101 - 151**	J	K	M	BB	BB	BB	BB	BB		CF	CF	CF	CF	CF	CF	CF		DN	DN	DN	DN	DN	DN	DN	DN		EB	EB	EB	EB	EB	EB	EB	EB	
180 - 820 pF**	181 - 821**	J	K	M	BB	BB	BB	BB	BB		CF	CF	CF	CF	CF	CF	CF		DN	DN	DN	DN	DN	DN	DN	DN	DN	EB	EB	EB	EB	EB	EB	EB	EB	
1000pF	102	J	K	M	BB	BB	BB	BB	BB		CF	CF	CF	CF	CF	CF	CF	CF	DN	DN	DN	DN	DN	DN	DN	DN	DN	EB	EB	EB	EB	EB	EB	EB	EB	EB
1200 pF	122	J	K	M	BB	BB	BB	BB	BB		CF	CF	CF	CF	CF	CF	CF	CF	DN	DN	DN	DN	DN	DN	DN	DN	DN	EB	EB	EB	EB	EB	EB	EB	EB	EB
1500 pF	152	J	K	M	BB	BB	BB	BB	BB		CF	CF	CF	CF	CF	CF	CF	CF	DN	DN	DN	DN	DN	DN	DN	DN	DN	EB	EB	EB	EB	EB	EB	EB	EB	EB
1800 pF	182	J	K	M	BB	BB	BB	BB	BB		CF	CF	CF	CF	CF	CF	CF	CF	DN	DN	DN	DN	DN	DN	DN	DN	DN	EB	EB	EB	EB	EB	EB	EB	EB	EB
2200 pF	222	J	K	M	BB	BB	BB	BB	BB		CF	CF	CF	CF	CF	CF	CF	CF	DN	DN	DN	DN	DN	DN	DN	DN	DN	EB	EB	EB	EB	EB	EB	EB	EB	EB
2700 pF	272	J	K	M	BB	BB	BB	BB	BB		CF	CF	CF	CF	CF	CF	CF	CF	DN	DN	DN	DN	DN	DN	DN	DN	DN	EB	EB	EB	EB	EB	EB	EB	EB	EB
3300 pF	332	J	K	M	BB	BB	BB	BB	BB	BB	CF	CF	CF	CF	CF	CF	CF	CF	DN	DN	DN	DN	DN	DN	DN	DN	DN	EB	EB	EB	EB	EB	EB	EB	EB	EB
3900 pF	392	J	K	M	BB	BB	BB	BB	BB	BB	CF	CF	CF	CF	CF	CF	CF	CF	DN	DN	DN	DN	DN	DN	DN	DN	DN	EB	EB	EB	EB	EB	EB	EB	EB	EB
4700 pF	472	J	K	M	BB	BB	BB	BB	BB	BB	CF	CF	CF	CF	CF	CF	CF	CF	DN	DN	DN	DN	DN	DN	DN	DN	DN	EB	EB	EB	EB	EB	EB	EB	EB	EB
5600 pF	562	J	K	M	BB	BB	BB	BB	BB	BB	CF	CF	CF	CF	CF	CF	CF	CF	DN	DN	DN	DN	DN	DN	DN	DN	DN	EB	EB	EB	EB	EB	EB	EB	EB	EB
6800 pF	682	J	K	M	BB	BB	BB	BB	BB	BB	CF	CF	CF	CF	CF	CF	CF	CF	DN	DN	DN	DN	DN	DN	DN	DN	DN	EB	EB	EB	EB	EB	EB	EB	EB	EB
8200 pF	822	J	K	M	BB	BB	BB	BB	BB	BB	CF	CF	CF	CF	CF	CF	CF	CF	DN	DN	DN	DN	DN	DN	DN	DN	DN	EB	EB	EB	EB	EB	EB	EB	EB	EB
10000 pF	103	J	K	M	BB	BB	BB	BB	BB	BB	CG	CG	CG	CG	CG	CG	CF	CF	DN	DN	DN	DN	DN	DN	DN	DN	DN	EL	EL	EL	EL	EL	EL	EL	EL	EL
12000 pF	123	J	K	M	BB	BB	BB	BB	BB		CF	CF	CF	CF	CF	CF			DN	DN	DN	DN	DN	DN	DN	DN	DN	EB	EB	EB	EB	EB	EB	EB	EB	EB
15000 pF	153	J	K	M	BB	BB	BB	BB	BB		CF	CF	CF	CF	CF	CF			DN	DN	DN	DN	DN	DN	DN	DN	DN	EQ	EQ	EQ	EQ	EQ	EQ	EQ	EQ	EQ
18000 pF	183	J	K	M	BB	BB	BB	BB	BB		CF	CF	CF	CF	CF	CF			DN	DN	DN	DN	DN	DN	DN	DN	DN	EB	EB	EB	EB	EB	EB	EB	EB	EB
22000 pF	223	J	K	M	BB	BB	BB	BB	BB		CF	CF	CF	CF	CF	CF			DN	DN	DN	DN	DN	DN	DN	DN	DN	EB	EB	EB	EB	EB	EB	EB	EB	EB
27000 pF	273	J	K	M	BB	BB	BB	BB			CF	CF	CF	CF	CF	CF			DN	DN	DN	DN	DN	DN	DP	DE	DG	EB	EB	EB	EB	EB	EB	EB	EB	EB
Cap	Cap Code	Rated Voltage (VDC)			6.3	10	16	25	50	100	6.3	10	16	25	50	100	200	250	6.3	10	16	25	35	50	100	200	250	6.3	10	16	25	35	50	100	200	250
		Voltage Code			9	8	4	3	5	1	9	8	4	3	5	1	2	A	9	8	4	3	6	5	1	2	A	9	8	4	3	6	5	1	2	A
		Case Size/ Series			C0402C						C0603C								C0805C									C1206C								

**Capacitance range Includes E24 decade values only. (i.e., 10, 11, 12, 13, 15, 16, 18, 20, 22, 24, 27, 30, 33, 36, 39, 43, 47, 51, 56, 62, 68, 75, 82, and 91).*
***Capacitance range Includes E12 decade values only. (i.e., 10, 12, 15, 18, 22, 27, 33, 39, 47, 56, 68, and 82).*
xx[1] Available only in K and M tolerance.

Table 1A – Capacitance Range/Selection Waterfall (0402 – 1206 Case Sizes) cont.

Cap	Cap Code	Case Size/ Series			C0402C						C0603C								C0805C									C1206C								
		Voltage Code			9	8	4	3	5	1	9	8	4	3	5	1	2	A	9	8	4	3	6	5	1	2	A	9	8	4	3	6	5	1	2	A
		Rated Voltage (VDC)			6.3	10	16	25	50	100	6.3	10	16	25	50	100	200	250	6.3	10	16	25	35	50	100	200	250	6.3	10	16	25	35	50	100	200	250
		Cap Tolerance			Product Availability and Chip Thickness Codes – See Table 2 for Chip Thickness Dimensions																																
33000 pF	333	J	K	M	BB	BB	BB	BB			CF	CF	CF	CF	CF	CF			DN	DN	DN	DN	DN	DN	DP	DE	DG	EB	EB	EB	EB	EB	EB	EB	EB	EB
39000 pF	393	J	K	M	BB	BB	BB	BB			CF	CF	CF	CF	CF	CF			DN	DN	DN	DN	DN	DN	DP	DE	DG	EB	EB	EB	EB	EB	EB	EC	EB	EB
47000 pF	473	J	K	M	BB	BB	BB	BB			CG	CG	CG	CG	CJ	CF			DO	DO	DO	DO	DO	DO	DE	DG	DG	EB	EB	EB	EB	EB	EB	EC	ED	ED
56000 pF	563	J	K	M	BB	BB	BB				CF	CF	CF	CF	CF	CJ			DP	DP	DP	DP	DP	DP	DE	DG	DG	EB	EB	EB	EB	EB	EB	EB	ED	ED
68000 pF	683	J	K	M	BB	BB	BB				CF	CF	CF	CF	CF	CJ			DP	DP	DP	DP	DP	DP	DE	DG	DG	EB	EB	EB	EB	EB	EB	EB	ED	ED
82000 pF	823	J	K	M	BB	BB	BB				CF	CF	CF	CF	CF	CJ			DP	DP	DP	DP	DP	DP	DE			EB	EB	EB	EB	EB	EB	EB	ED	ED
0.1 µF	104	J	K	M	BB	BB	BB	BB[1]			CJ	CJ	CJ	CJ	CJ	CJ			DN	DN	DN	DN	DN	DN	DH			EB	EB	EB	EB	EB	EB	EB	EH	EH
0.12 µF	124	J	K	M							CF	CF	CF	CF	CF				DN	DN	DN	DN	DP	DP	DG			EC	EC	EC	EC	EC	EC	EC	EG	EM
0.15 µF	154	J	K	M							CF	CF	CF	CF	CF				DN	DN	DN	DN	DP	DP	DG			EC	EC	EC	EC	EC	EC	EC	EG	EG
0.18 µF	184	J	K	M							CF	CF	CF	CF					DN	DN	DN	DN	DG	DG	DG			EC	EC	EC	EC	EC	EC	EC	EM	EM
0.22 µF	224	J	K	M	BB[1]	BB[1]	BB[1]	BB[1]			CF	CF	CF	CF	CJ				DN	DN	DN	DN	DG	DG	DG			EC	EC	EC	EC	EC	EC	EC	EG	EG
0.27 µF	274	J	K	M							CF	CF	CF						DP	DP	DP	DP	DP	DP	DG			EB	EB	EB	EB	EC	EC	EM		
0.33 µF	334	J	K	M							CF	CF	CF						DG	DG	DG	DG	DG	DG				EB	EB	EB	EB	EC	EC	EG		
0.39 µF	394	J	K	M							CF	CF	CF						DG	DG	DG	DG	DE	DE				EB	EB	EB	EB	EC	EC	EG		
0.47 µF	474	J	K	M	BB[1]	BB[1]					CF	CF	CF	CG					DG	DG	DG	DG	DG	DG				EC	EC	EC	EC	EC	EC	EG		
0.56 µF	564	J	K	M															DP	DP	DP	DG	DH	DH				ED	ED	ED	ED	EC	EC	EM		
0.68 µF	684	J	K	M															DP	DP	DP	DG	DH	DH				EF	EF	EF	EF	ED	ED	EM		
0.82 µF	824	J	K	M															DP	DP	DP	DG						EF	EF	EF	EF	ED	ED	EH		
1 µF	105	J	K	M							CG	CG	CG	CJ[1]					DH	DH	DH	DH	DH[1]	DH[1]				EP	EP	EP	EP	EH	EH	EH		
1.2 µF	125	J	K	M															DE	DE	DE							ED	ED	ED	EG	EH	EH			
1.5 µF	155	J	K	M															DG	DG	DG							ED	ED	ED	EG	EH	EH			
1.8 µF	185	J	K	M															DG	DG	DG							ED	ED	ED	EF	EH	EH			
2.2 µF	225	J	K	M							CG[1]	CG[1]							DH	DH	DH	DH[1]	DH[1]	DH[1]				EH	EH	EH[1]	EH[1]	EH	EH			
2.7 µF	275	J	K	M																								EN	EN	EN	EH					
3.3 µF	335	J	K	M																								ED	ED	ED	EH					
3.9 µF	395	J	K	M																								EF	EF	EF	EH					
4.7 µF	475	J	K	M							CK								DH	DH	DH	DH						EH	EH	EH	EH	EH[1]	EH[1]			
5.6 µF	565	J	K	M																								EH	EH	EH						
6.8 µF	685	J	K	M																								EH	EH	EH						
8.2 µF	825	J	K	M																								EH	EH	EH						
10 µF	106	J	K	M															DH[1]	DH[1]								EH	EH	EH	EH					
22 µF	226	J	K	M																								EH[1]	EH[1]							
Cap	Cap Code	Rated Voltage (VDC)			6.3	10	16	25	50	100	6.3	10	16	25	50	100	200	250	6.3	10	16	25	35	50	100	200	250	6.3	10	16	25	35	50	100	200	250
		Voltage Code			9	8	4	3	5	1	9	8	4	3	5	1	2	A	9	8	4	3	6	5	1	2	A	9	8	4	3	6	5	1	2	A
		Case Size/ Series			C0402C						C0603C								C0805C									C1206C								

**Capacitance range Includes E24 decade values only. (i.e., 10, 11, 12, 13, 15, 16, 18, 20, 22, 24, 27, 30, 33, 36, 39, 43, 47, 51, 56, 62, 68, 75, 82, and 91).*
***Capacitance range Includes E12 decade values only. (i.e., 10, 12, 15, 18, 22, 27, 33, 39, 47, 56, 68, and 82).*
xx[1] Available only in K and M tolerance.
xx[2] Available only in M tolerance.

Table 1B – Capacitance Range/Selection Waterfall (1210 – 1812 Case Sizes)

Cap	Cap Code	Case Size/ Series			C1210C								C1805C			C1808C			C1812C[2]				
		Voltage Code			9	8	4	3	5	1	2	A	5	1	2	5	1	2	3	5	1	2	A
		Rated Voltage (VDC)			6.3	10	16	25	50	100	200	250	50	100	200	50	100	200	25	50	100	200	250
		Cap Tolerance			Product Availability and Chip Thickness Codes – See Table 2 for Chip Thickness Dimensions																		
10 - 20 pF*	100 - 200*	J	K	M	FB	FB	FB	FB	FB	FB	FB												
22 pF	220	J	K	M	FB	FB	FB	FB	FB	FB	FB												
24 - 91pF	240 - 910*	J	K	M	FB	FB	FB	FB	FB	FB	FB												
100 - 150 pF**	101 - 151**	J	K	M	FB	FB	FB	FB	FB	FB	FB												
220 pF	221	J	K	M	FB	FB	FB	FB	FB	FB	FB		NC	NC	NC								
270 pF	271	J	K	M	FB	FB	FB	FB	FB	FB	FB		NC	NC	NC								
330 pF	331	J	K	M	FB	FB	FB	FB	FB	FB	FB		NC	NC	NC	LF	LF	LF					
390 pF	391	J	K	M	FB	FB	FB	FB	FB	FB	FB		NC	NC	NC	LF	LF	LF					
470 pF	471	J	K	M	FB	FB	FB	FB	FB	FB	FB		NC	NC	NC	LF	LF	LF	GB	GB	GB	GB	
560 pF	561	J	K	M	FB	FB	FB	FB	FB	FB	FB		NC	NC	NC	LF	LF	LF	GB	GB	GB	GB	
680 pF	681	J	K	M	FB	FB	FB	FB	FB	FB	FB		NC	NC	NC	LF	LF	LF	GB	GB	GB	GB	
820 pF	821	J	K	M	FB	FB	FB	FB	FB	FB	FB		NC	NC	NC	LF	LF	LF	GB	GB	GB	GB	
1000pF	102	J	K	M	FB	FB	FB	FB	FB	FB	FB		NC	NC	NC	LF	LF	LF	GB	GB	GB	GB	
1200 pF	122	J	K	M	FB	FB	FB	FB	FB	FB	FB		NC	NC		LF	LF	LF	GB	GB	GB	GB	
1500 pF	152	J	K	M	FB	FB	FB	FB	FB	FB	FE		NC	NC		LF	LF	LF	GB	GB	GB	GB	
1800 pF	182	J	K	M	FB	FB	FB	FB	FB	FB	FE		NC	NC		LF	LF	LF	GB	GB	GB	GB	
2200 pF	222	J	K	M	FB	FB	FB	FB	FB	FB	FB	FB	NC	NC		LF	LF	LF	GB	GB	GB	GB	
2700 pF	272	J	K	M	FB	FB	FB	FB	FB	FB	FB	FB	NA	NA	NA	LF	LF	LF	GB	GB	GB	GB	
3300 pF	332	J	K	M	FB	FB	FB	FB	FB	FB	FB	FB	NA	NA	NA	LF	LF		GB	GB	GB	GB	
3900 pF	392	J	K	M	FB	FB	FB	FB	FB	FB	FB	FB	NA	NA	NA	LF	LF		GB	GB	GB	GB	
4700 pF	472	J	K	M	FB	FB	FB	FB	FB	FB	FB	FB	NA	NA	NA	LD	LD	LD	GB	GB	GB	GD	
5600 pF	562	J	K	M	FB	FB	FB	FB	FB	FB	FB	FB	NA	NA	NA	LD	LD	LD	GB	GB	GB	GH	
6800 pF	682	J	K	M	FB	FB	FB	FB	FB	FB	FB	FB	NA	NA		LD	LD	LD	GB	GB	GB	GB	GB
8200 pF	822	J	K	M	FB	FB	FB	FB	FB	FB	FB	FB	NA	NA		LD	LD	LD	GB	GB	GB	GB	GB
10000 pF	103	J	K	M	FB	FB	FB	FB	FB	FB	FB	FB	NA	NA		LD	LD	LD	GB	GB	GB	GB	GB
12000 pF	123	J	K	M	FB	FB	FB	FB	FB	FB	FB	FB	NA	NA		LD	LD	LD	GB	GB	GB	GB	GB
15000 pF	153	J	K	M	FB	FB	FB	FB	FB	FB	FB	FB	NA	NA		LD	LD	LD	GB	GB	GB	GB	GB
18000 pF	183	J	K	M	FB	FB	FB	FB	FB	FB	FB	FB	NA	NA		LD	LD	LD	GB	GB	GB	GB	GB
22000 pF	223	J	K	M	FB	FB	FB	FB	FB	FB	FB	FB	NA	NA		LD	LD		GB	GB	GB	GB	GB
27000 pF	273	J	K	M	FB	FB	FB	FB	FB	FB	FB	FB	NA	NA		LD	LD		GB	GB	GB	GB	GB
33000 pF	333	J	K	M	FB	FB	FB	FB	FB	FB	FB	FB	NA			LD	LD		GB	GB	GB	GB	GB
39000 pF	393	J	K	M	FB	FB	FB	FB	FB	FB	FB	FB	NA			LD	LD		GB	GB	GB	GB	GB
47000 pF	473	J	K	M	FB	FB	FB	FB	FB	FB	FC	FC	NA			LD	LD		GB	GB	GB	GB	GB
56000 pF	563	J	K	M	FB	FB	FB	FB	FB	FB	FC	FC	NA			LD	LD		GB	GB	GB	GB	GB
68000 pF	683	J	K	M	FB	FB	FB	FB	FB	FB	FC	FC	NA			LD			GB	GB	GB	GB	GB
Cap	Cap Code	Rated Voltage (VDC)			6.3	10	16	25	50	100	200	250	50	100	200	50	100	200	25	50	100	200	250
		Voltage Code			9	8	4	3	5	1	2	A	5	1	2	5	1	2	3	5	1	2	A
		Case Size/Series			C1210C								C1805C			C1808C			C1812C[2]				

**Capacitance range Includes E24 decade values only. (i.e., 10, 11, 12, 13, 15, 16, 18, 20, 22, 24, 27, 30, 33, 36, 39, 43, 47, 51, 56, 62, 68, 75, 82, and 91).*
***Capacitance range Includes E12 decade values only. (i.e., 10, 12, 15, 18, 22, 27, 33, 39, 47, 56, 68, and 82).*
xx[1] Available only in K and M tolerance.
[2] Available capacitance values available in X7R with KONNEKT Technology.

Table 1B – Capacitance Range/Selection Waterfall (1210 – 1812 Case Sizes) cont.

Cap	Cap Code	Case Size/ Series			C1210C								C1805C			C1808C			C1812C[2]				
		Voltage Code			9	8	4	3	5	1	2	A	5	1	2	5	1	2	3	5	1	2	A
		Rated Voltage (VDC)			6.3	10	16	25	50	100	200	250	50	100	200	50	100	200	25	50	100	200	250
		Cap Tolerance			Product Availability and Chip Thickness Codes – See Table 2 for Chip Thickness Dimensions																		
82000 pF	823	J	K	M	FB	FB	FB	FB	FB	FC	FF	FF	NA			LD			GB	GB	GB	GB	GB
0.1 µF	104	J	K	M	FB	FB	FB	FB	FB	FD	FG	FG	NA			LD			GB	GB	GB	GB	GB
0.12 µF	124	J	K	M	FB	FB	FB	FB	FB	FD	FH	FH				LD			GB	GB	GB	GB	GB
0.15 µF	154	J	K	M	FC	FC	FC	FC	FC	FD	FM	FM				LD			GB	GB	GB	GE	GE
0.18 µF	184	J	K	M	FC	FC	FC	FC	FC	FD	FK	FK				LD			GB	GB	GB	GG	GG
0.22 µF	224	J	K	M	FF	FF	FF	FF	FF	FD	FK	FK							GB	GB	GB	GG	GG
0.27 µF	274	J	K	M	FC	FC	FC	FC	FC	FD	FP	FP							GB	GB	GG	GG	GG
0.33 µF	334	J	K	M	FD	FD	FD	FD	FD	FD	FM	FM							GB	GB	GG	GG	GG
0.39 µF	394	J	K	M	FD	FD	FD	FD	FD	FD	FK	FK							GB	GB	GG	GG	GG
0.47 µF	474	J	K	M	FD	FD	FD	FD	FD	FD	FS	FS							GB	GB	GG	GJ	GJ
0.56 µF	564	J	K	M	FD	FD	FD	FD	FD	FF									GC	GC	GG		
0.68 µF	684	J	K	M	FD	FD	FD	FD	FD	FG									GC	GC	GG		
0.82 µF	824	J	K	M	FF	FF	FF	FF	FF	FL									GE	GE	GG		
1 µF	105	J	K	M	FZ	FZ	FZ	FZ	FZ	FT									GE	GE	GG		
1.2 µF	125	J	K	M	FH	FH	FH	FH	FG	FH									GB	GB	GB		
1.5 µF	155	J	K	M	FH	FH	FH	FH	FG	FM									GC	GC	GC		
1.8 µF	185	J	K	M	FH	FH	FH	FH	FG	FJ									GE	GE	GE		
2.2 µF	225	J	K	M	FJ	FJ	FJ	FJ	FY	FY[1]									GO	GO	GO[1]		
2.7 µF	275	J	K	M	FE	FE	FE	FG	FH										GJ	GJ	GJ		
3.3 µF	335	J	K	M	FF	FF	FF	FM	FM										GL	GL	GL		
3.9 µF	395	J	K	M	FG	FG	FG	FG	FK										GK	GK			
4.7 µF	475	J	K	M	FC	FC	FC	FG	FS										GK	GK			
5.6 µF	565	J	K	M	FF	FF	FF	FH															
6.8 µF	685	J	K	M	FG	FG	FG	FM															
8.2 µF	825	J	K	M	FH	FH	FH	FK															
10 µF	106	J	K	M	FT[1]	FT[1]	FT[1]	GA[1]	FS[1]										GK				
15 µF	156	J	K	M	FM	FM																	
22 µF	226				FS	FS	FS[1]	FS[1]															
47 µF	476				FS[1]	FS[1]																	
Cap	Cap Code	Rated Voltage (VDC)			6.3	10	16	25	50	100	200	250	50	100	200	50	100	200	25	50	100	200	250
		Voltage Code			9	8	4	3	5	1	2	A	5	1	2	5	1	2	3	5	1	2	A
		Case Size/Series			C1210C								C1805C			C1808C			C1812C[2]				

**Capacitance range Includes E24 decade values only. (i.e., 10, 11, 12, 13, 15, 16, 18, 20, 22, 24, 27, 30, 33, 36, 39, 43, 47, 51, 56, 62, 68, 75, 82, and 91).*
***Capacitance range Includes E12 decade values only. (i.e., 10, 12, 15, 18, 22, 27, 33, 39, 47, 56, 68, and 82).*
xx[1] Available only in K and M tolerance.
[2] Available capacitance values available in X7R with KONNEKT Technology.

Table 1C – Capacitance Range/Selection Waterfall (1825 – 2225 Case Sizes)

Cap	Cap Code	Case Size/Series			C1825C				C2220C					C2225C			
		Voltage Code			5	1	2	A	3	5	1	2	A	5	1	2	A
		Rated Voltage (VDC)			50	100	200	250	25	50	100	200	250	50	100	200	250
		Cap Tolerance			Product Availability and Chip Thickness Codes – See Table 2 for Chip Thickness Dimensions												
3900 pF	392	J	K	M	HB	HB	HB										
4700 pF	472	J	K	M	HB	HB	HB							KE	KE	KE	
5600 pF	562	J	K	M	HB	HB	HB							KE	KE	KE	
6800 pF	682	J	K	M	HB	HB	HB		JE	JE	JE			KE	KE	KE	
8200 pF	822	J	K	M	HB	HB	HB		JE	JE	JE			KE	KE	KE	
10000 pF	103	J	K	M	HB	HB	HE		JE	JE	JE			KE	KE	KE	
12000 pF	123	J	K	M	HB	HB	HE		JE	JE	JE			KE	KE	KE	
15000 pF	153	J	K	M	HB	HB			JE	JE	JE			KE	KE	KE	
18000 pF	183	J	K	M	HB	HE			JE	JE	JE			KE	KE		
22000 pF	223	J	K	M	HB	HB	HB	HB	JE	JE	JE			KE	KE		
27000 pF	273	J	K	M	HB	HB	HB	HB	JE	JE	JE			KE	KE		
33000 pF	333	J	K	M	HB	HB	HB	HB	JB	JB	JB			KE			
39000 pF	393	J	K	M	HB	HB	HB	HB	JB	JB	JB						
47000 pF	473	J	K	M	HB	HB	HB	HB	JB	JB	JB						
56000 pF	563	J	K	M	HB	HB	HB	HB	JB	JB	JB						
68000 pF	683	J	K	M	HB	HB	HB	HB	JB	JB	JB						
82000 pF	823	J	K	M	HB	HB	HB	HB	JC	JC	JC	JC	JC				
0.1 µF	104	J	K	M	HB	HB	HB	HB	JC	JC	JC	JC	JC	KC	KC	KC	KC
0.12 µF	124	J	K	M	HB	HB	HB	HB	JC	JC	JC	JC	JC	KC	KC	KC	KC
0.15 µF	154	J	K	M	HB	HB	HB	HB	JC	JC	JC	JC	JC	KC	KC	KC	KC
0.18 µF	184	J	K	M	HB	HB	HB	HB	JC	JC	JC	JC	JC	KC	KC	KC	KC
0.22 µF	224	J	K	M	HB	HB	HB	HB	JC	JC	JC	JC	JC	KC	KC	KC	KC
0.27 µF	274	J	K	M	HB	HB	HB	HB	JC	JC	JC	JC	JC	KB	KC	KC	KC
0.33 µF	334	J	K	M	HB	HB	HB	HB	JC	JC	JC	JC	JC	KB	KC	KC	KC
0.39 µF	394	J	K	M	HB	HB	HD	HD	JC	JC	JC	JC	JC	KB	KC	KC	KC
0.47 µF	474	J	K	M	HB	HB	HD	HD	JC	JC	JC	JC	JC	KB	KC	KD	KD
0.56 µF	564	J	K	M	HB	HD	HD	HD	JC	JC	JC	JD	JD	KB	KC	KD	KD
0.68 µF	684	J	K	M	HB	HD	HD	HD	JC	JC	JD	JD	JD	KB	KC	KD	KD
0.82 µF	824	J	K	M	HB	HF	HF	HF	JC	JC	JF	JF	JF	KB	KC	KE	KE
1.0 µF	105	J	K	M	HB	HF	HF	HF	JC	JC	JF	JF	JF	KB	KD	KE	KE
1.2 µF	125	J	K	M	HB				JC	JC				KB	KE	KE	KE
1.5 µF	155	J	K	M	HC				JC	JC				KC			
1.8 µF	185	J	K	M	HD				JD	JD				KD			
2.2 µF	225	J	K	M	HF				JF	JF				KD			
4.7 µF	475	J	K	M					JF	JF							
10 µF	106	J	K	M					JF	JO							
15 µF	156	J	K	M					JO	JO							
22 µF	226	J	K	M					JO								
Cap	Cap Code	Rated Voltage (VDC)			50	100	200	250	25	50	100	200	250	50	100	200	250
		Voltage Code			5	1	2	A	3	5	1	2	A	5	1	2	A
		Case Size/Series			C1825C				C2220C					C2225C			

**Capacitance range Includes E24 decade values only. (i.e., 10, 11, 12, 13, 15, 16, 18, 20, 22, 24, 27, 30, 33, 36, 39, 43, 47, 51, 56, 62, 68, 75, 82, and 91).*
***Capacitance range Includes E12 decade values only. (i.e., 10, 12, 15, 18, 22, 27, 33, 39, 47, 56, 68, and 82).*
xx[1] Available only in K and M tolerance.
[2] Available capacitance values available in X7R with KONNEKT Technology.

Table 2A – Chip Thickness/Tape & Reel Packaging Quantities

Thickness Code	Case Size	Thickness ± Range (mm)	Paper Quantity		Plastic Quantity	
			7" Reel	13" Reel	7" Reel	13" Reel
BB	0402	0.50 ± 0.05	10,000	50,000	0	0
CF	0603	0.80 ± 0.07	4,000	15,000	0	0
CG	0603	0.80 ± 0.10	4,000	15,000	0	0
CJ	0603	0.80 ± 0.15	4,000	15,000	0	0
CK	0603	0.80 ± 0.20	4,000	15,000	0	0
DM	0805	0.70 ± 0.20	4,000	15,000	0	0
DN	0805	0.78 ± 0.10	4,000	15,000	0	0
DO	0805	0.80 ± 0.10	4,000	15,000	0	0
DP	0805	0.90 ± 0.10	4,000	15,000	0	0
DE	0805	1.00 ± 0.10	0	0	2,500	10,000
DG	0805	1.25 ± 0.15	0	0	2,500	10,000
DH	0805	1.25 ± 0.20	0	0	2,500	10,000
EB	1206	0.78 ± 0.10	0	0	4,000	10,000
EQ	1206	0.78 ±0.20	0	0	4,000	10,000
EC	1206	0.90 ± 0.10	0	0	4,000	10,000
EN	1206	0.95 ± 0.10	0	0	4,000	10,000
ED	1206	1.00 ± 0.10	0	0	2,500	10,000
EE	1206	1.10 ± 0.10	0	0	2,500	10,000
EF	1206	1.20 ± 0.15	0	0	2,500	10,000
EP	1206	1.20 ± 0.20	0	0	2,500	10,000
EM	1206	1.25 ± 0.15	0	0	2,500	10,000
EL	1206	1.25 ± 0.20	0	0	2,500	10,000
EG	1206	1.60 ± 0.15	0	0	2,000	8,000
EH	1206	1.60 ± 0.20	0	0	2,000	8,000
FB	1210	0.78 ± 0.10	0	0	4,000	10,000
FC	1210	0.90 ± 0.10	0	0	4,000	10,000
FD	1210	0.95 ± 0.10	0	0	4,000	10,000
FE	1210	1.00 ± 0.10	0	0	2,500	10,000
FF	1210	1.10 ± 0.10	0	0	2,500	10,000
FG	1210	1.25 ± 0.15	0	0	2,500	10,000
FZ	1210	1.25 ± 0.20	0	0	2,500	10,000
FL	1210	1.40 ± 0.15	0	0	2,000	8,000
FH	1210	1.55 ± 0.15	0	0	2,000	8,000
FP	1210	1.60 ± 0.20	0	0	2,000	8,000
FM	1210	1.70 ± 0.20	0	0	2,000	8,000
FJ	1210	1.85 ± 0.20	0	0	2,000	8,000
FT	1210	1.90 ± 0.20	0	0	2,000	8,000
GA	1210	1.90 ± 0.20*	0	0	1,000	4,000
FY	1210	2.00 ± 0.20	0	0	2,000	8,000
FK	1210	2.10 ± 0.20	0	0	2,000	8,000
FS	1210	2.50 ± 0.30	0	0	1,000	4,000
NA	1805	0.90 ± 0.10	0	0	4,000	10,000
NC	1805	1.00 ± 0.15	0	0	4,000	10,000
LD	1808	0.90 ± 0.10	0	0	2,500	10,000
Thickness Code	**Case Size[1]**	**Thickness ± Range (mm)**	**7" Reel**	**13" Reel**	**7" Reel**	**13" Reel**
			Paper Quantity[1]		**Plastic Quantity**	

Package quantity based on finished chip thickness specifications.

Table 2A – Chip Thickness/Tape & Reel Packaging Quantities cont.

Thickness Code	Case Size	Thickness ± Range (mm)	Paper Quantity		Plastic Quantity	
			7" Reel	13" Reel	7" Reel	13" Reel
LF	1808	1.00 ± 0.15	0	0	2,500	10,000
GB	1812	1.00 ± 0.10	0	0	1,000	4,000
GC	1812	1.10 ± 0.10	0	0	1,000	4,000
GD	1812	1.25 ± 0.15	0	0	1,000	4,000
GE	1812	1.30 ± 0.10	0	0	1,000	4,000
GH	1812	1.40 ± 0.15	0	0	1,000	4,000
GG	1812	1.55 ± 0.10	0	0	1,000	4,000
GK	1812	1.60 ± 0.20	0	0	1,000	4,000
GJ	1812	1.70 ± 0.15	0	0	1,000	4,000
GL	1812	1.90 ± 0.20	0	0	500	2,000
GO	1812	2.50 ± 0.20	0	0	500	2,000
HB	1825	1.10 ± 0.15	0	0	1,000	4,000
HC	1825	1.15 ± 0.15	0	0	1,000	4,000
HD	1825	1.30 ± 0.15	0	0	1,000	4,000
HE	1825	1.40 ± 0.15	0	0	1,000	4,000
HF	1825	1.50 ± 0.15	0	0	1,000	4,000
JB	2220	1.00 ± 0.15	0	0	1,000	4,000
JC	2220	1.10 ± 0.15	0	0	1,000	4,000
JD	2220	1.30 ± 0.15	0	0	1,000	4,000
JE	2220	1.40 ± 0.15	0	0	1,000	4,000
JF	2220	1.50 ± 0.15	0	0	1,000	4,000
JO	2220	2.40 ± 0.15	0	0	500	2,000
KB	2225	1.00 ± 0.15	0	0	1,000	4,000
KC	2225	1.10 ± 0.15	0	0	1,000	4,000
KD	2225	1.30 ± 0.15	0	0	1,000	4,000
KE	2225	1.40 ± 0.15	0	0	1,000	4,000
Thickness Code	**Case Size[1]**	**Thickness ± Range (mm)**	**7" Reel**	**13" Reel**	**7" Reel**	**13" Reel**
			Paper Quantity[1]		**Plastic Quantity**	

Package quantity based on finished chip thickness specifications.

Table 2B – Bulk Packaging Quantities

Packaging Type		Loose Packaging	
		Bulk Bag (default)	
Packaging C-Spec[1]		N/A[2]	
Case Size		Packaging Quantities (pieces/unit packaging)	
EIA (in)	Metric (mm)	Minimum	Maximum
0402	1005	1	50,000
0603	1608		
0805	2012		
1206	3216		
1210	3225		
1808	4520		20,000
1812	4532		
1825	4564		
2220	5650		
2225	5664		

[1] *The "Packaging C-Spec" is a 4 to 8 digit code which identifies the packaging type and/or product grade. When ordering, the proper code must be included in the 15th through 22nd character positions of the ordering code. See "Ordering Information" section of this document for further details. Commercial grade product ordered without a packaging C-Spec will default to our standard "Bulk Bag" packaging. Contact KEMET if you require a bulk bag packaging option for automotive grade products.*

[2] *A packaging C-Spec (see note 1 above) is not required for "Bulk Bag" packaging (excluding anti-static Bulk Bag and automotive grade products). The 15th through 22nd character positions of the ordering code should be left blank. All product ordered without a packaging C-Spec will default to our standard "Bulk Bag" packaging.*

Table 3 – Chip Capacitor Land Pattern Design Recommendations per IPC–7351

EIA Size Code	Metric Size Code	Density Level A: Maximum (Most) Land Protrusion (mm)					Density Level B: Median (Nominal) Land Protrusion (mm)					Density Level C: Minimum (Least) Land Protrusion (mm)				
		C	Y	X	V1	V2	C	Y	X	V1	V2	C	Y	X	V1	V2
0402	1005	0.50	0.72	0.72	2.20	1.20	0.45	0.62	0.62	1.90	1.00	0.40	0.52	0.52	1.60	0.80
0603	1608	0.90	1.15	1.10	4.00	2.10	0.80	0.95	1.00	3.10	1.50	0.60	0.75	0.90	2.40	1.20
0805	2012	1.00	1.35	1.55	4.40	2.60	0.90	1.15	1.45	3.50	2.00	0.75	0.95	1.35	2.80	1.70
1206	3216	1.60	1.35	1.90	5.60	2.90	1.50	1.15	1.80	4.70	2.30	1.40	0.95	1.70	4.00	2.00
1210	3225	1.60	1.35	2.80	5.65	3.80	1.50	1.15	2.70	4.70	3.20	1.40	0.95	2.60	4.00	2.90
1210[1]	3225	1.50	1.60	2.90	5.60	3.90	1.40	1.40	2.80	4.70	3.30	1.30	1.20	2.70	4.00	3.00
1808	4520	2.30	1.75	2.30	7.40	3.30	2.20	1.55	2.20	6.50	2.70	2.10	1.35	2.10	5.80	2.40
1812	4532	2.15	1.60	3.60	6.90	4.60	2.05	1.40	3.50	6.00	4.00	1.95	1.20	3.40	5.30	3.70
1825	4564	2.15	1.60	6.90	6.90	7.90	2.05	1.40	6.80	6.00	7.30	1.95	1.20	6.70	5.30	7.00
2220	5650	2.75	1.70	5.50	8.20	6.50	2.65	1.50	5.40	7.30	5.90	2.55	1.30	5.30	6.60	5.60
2225	5664	2.70	1.70	6.90	8.10	7.90	2.60	1.50	6.80	7.20	7.30	2.50	1.30	6.70	6.50	7.00

[1] *Only for capacitance values ≥ 22 µF*

Density Level A: *For low-density product applications. Recommended for wave solder applications and provides a wider process window for reflow solder processes. KEMET only recommends wave soldering of EIA 0603, 0805, and 1206 case sizes.*

Density Level B: *For products with a moderate level of component density. Provides a robust solder attachment condition for reflow solder processes.*

Density Level C: *For high component density product applications. Before adapting the minimum land pattern variations the user should perform qualification testing based on the conditions outlined in IPC Standard 7351 (IPC–7351).*

Image below based on Density Level B for an EIA 1210 case size.

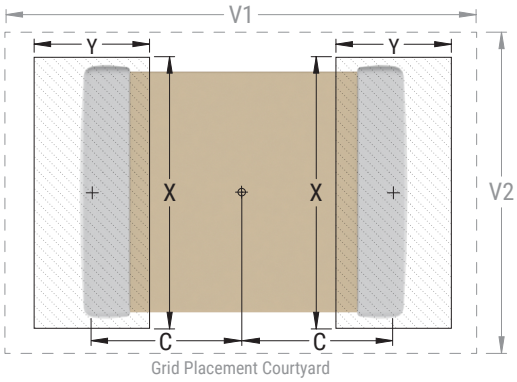

Soldering Process

Recommended Soldering Technique:

- Solder wave or solder reflow for EIA case sizes 0603, 0805 and 1206
- All other EIA case sizes are limited to solder reflow only

Recommended Reflow Soldering Profile:

KEMET's families of surface mount multilayer ceramic capacitors (SMD MLCCs) are compatible with wave (single or dual), convection, IR or vapor phase reflow techniques. Preheating of these components is recommended to avoid extreme thermal stress. KEMET's recommended profile conditions for convection and IR reflow reflect the profile conditions of the IPC/J-STD-020 standard for moisture sensitivity testing. These devices can safely withstand a maximum of three reflow passes at these conditions.

Profile Feature	Termination Finish	
	SnPb	100% Matte Sn
Preheat/Soak		
Temperature Minimum (T_{Smin})	100°C	150°C
Temperature Maximum (T_{Smax})	150°C	200°C
Time (t_S) from T_{Smin} to T_{Smax}	60 – 120 seconds	60 – 120 seconds
Ramp-Up Rate (T_L to T_P)	3°C/second maximum	3°C/second maximum
Liquidous Temperature (T_L)	183°C	217°C
Time Above Liquidous (t_L)	60 – 150 seconds	60 – 150 seconds
Peak Temperature (T_P)	235°C	260°C
Time Within 5°C of Maximum Peak Temperature (t_P)	20 seconds maximum	30 seconds maximum
Ramp-Down Rate (T_P to T_L)	6°C/second maximum	6°C/second maximum
Time 25°C to Peak Temperature	6 minutes maximum	8 minutes maximum

Note 1: All temperatures refer to the center of the package, measured on the capacitor body surface that is facing up during assembly reflow.

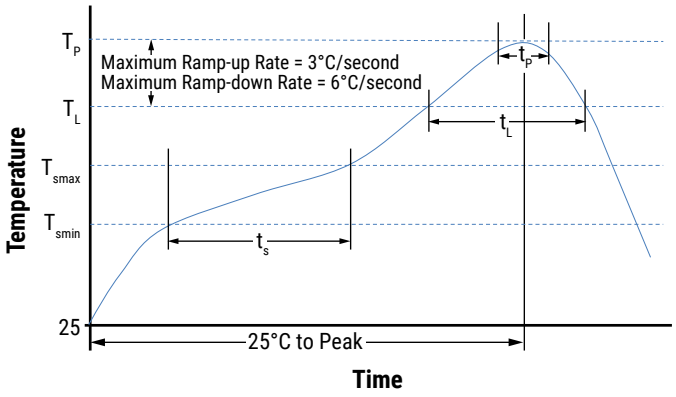

X7R Performance and Reliability: SMD Test Methods and Conditions

Test	Reference	Test Condition	Limits
Visual and Mechanical	KEMET Internal	No defects that may affect performance (10X)	Dimensions according KEMET Spec Sheet
Capacitance (Cap)	KEMET Internal	C ≤ 10 µF 1 kHz ±50 Hz and 1.0 ±0.2 V_{rms} or 0.5 ±0.2 V_{rms}* C > 10 µF 120 Hz ±10 Hz and 0.5 ±0.1 V_{rms} * See part number specification sheet for voltage Capacitance measurements (including tolerance) are indexed to a referee time of 48 or 1,000 hours Please refer to a part number specification sheet for referee time details	Within Tolerance
Dissipation Factor (DF)	KEMET Internal	C ≤ 10 µF Frequency: 1 kHz ±50 Hz Voltage*: 1.0 ±0.2 V_{rms},0.5 ±0.2 V_{rms} C > 10 µF Frequency: 120 Hz ±10 Hz Voltage: 0.5 ±0.1 V_{rms} * See part number specification sheet for voltage	Within Specification

EIA Case Size	Rated DC Voltage	Capacitance	Dissipation Factor (Maximum %)
0402	< 16	< 0.1 µF	5.0
		≥ 0.1 µF	10.0
	16	< 0.1 µF	3.5
		≥ 0.1 µF	10.0
	25	< 0.1 µF	3.5
		≥ 0.1 µF	10.0
	> 25	All	2.5
0603[1]	< 16	< 1.0 µF	5.0
	16 / 25		3.5
	> 25		2.5
	< 16	≥ 1.0 µF	10.0
	16 / 25		
0805[2]	< 16	< 2.2 µF	5.0
	16 / 25		3.5
	> 25	< 1.0 µF	2.5
	< 16	≥ 2.2 µF	10.0
	16 / 25		
	> 25	≥ 1.0 µF	
1206[3]	< 16	< 10 µF	5.0
	16 / 25		3.5
	> 25	All	2.5
	< 16	≥ 10 µF	10.0
	16 / 25		
1210[4]	< 16	< 22 µF	5.0
	16 / 25		3.5
	> 25		2.5
	< 16	≥ 22 µF	10.0
	16 / 25		
1805 – 2225	< 16	All	5.0
	16 / 25		3.5
	> 25		2.5

[1] *For Cap value 0.22 µF (16 V and 25 V) DF is 5% and for Cap value 4.7 µF (25 V) DF is 3.5%.*
[2] *For Cap value 1.0 µF (16 V and 25 V) DF is 5%.*
[3] *For Cap value 2.2 µF (25 V) and ≥ 2.2 µF (35 and 50 V) DF is 10%. For Cap Value 1.0uF (100V) DF is 5.0%. For Cap value 1.0 µF (50V & 35V) DF is 3.5%.*
[4] *For Cap value 10uF (16V, 25V and 50V) DF is 5%. For Cap value 4.7µF (50 V) DF is 5%. For Cap value 2.2uF (100V) DF is 10%. For Cap value 1.0 µF (≤50V) DF is 5.0%.*

X7R Performance and Reliability: SMD Test Methods and Conditions cont.

Test	Reference	Test Condition	Limits
Insulation Resistance (IR)	KEMET Internal	Apply rated voltage for 120 seconds at 25°C	Within Specification To obtain IR limit, divide MΩ - µF value by the capacitance and compare to GΩ limit. Select the lower of the two limits.

Insulation Resistance (IR) Limits Table

EIA Case Size	Rated DC Voltage	1,000 megohm microfarads or 100 GΩ	500 megohm microfarads or 10 GΩ	100 megohm microfarads or 10 GΩ
0402	ALL	< 0.012 µF	≥ 0.012 µF < 0.47 µf	≥ 0.47 µf
0603[1]	≤ 200 V	< 0.047 µF	≥ 0.047 µf < 0.47 µf	≥ 0.47 µf
	250 V	N/A	N/A	ALL
0805[2]	≤ 200 V	< 0.15 µF	≥ 0.15 µF < 2.2 µf	≥ 2.2 µf
	250 V	< .027 µF	N/A	≥ .027 µF
1206[3]	≤ 200 V	< 0.47 µF	≥ 0.47 µF < 2.2 µf	≥ 2.2 µf
	250 V	< 0.12 µF	N/A	≥ 0.12 µF
1210[4]	≤ 200 V	< 0.39 µF	≥ 0.39 µF < 10 µf	≥ 10 µf
	250 V	< 0.27 µF	N/A	≥ 0.27 µF
1805	ALL	ALL	N/A	N/A
1808	ALL	ALL	N/A	N/A
1812	ALL	< 2.2 µF	≥ 2.2 µF	N/A
1825	ALL	ALL	N/A	N/A
2220	ALL	< 10 µF	≥ 10 µF	N/A
2225	ALL	ALL	N/A	N/A

[1] For Cap value 10 nF (≤ 100 V) IR should be calculated under 500 megohm microfarads or 10 GΩ.
For Cap values 5.6nF, 6.8nF, 8.2nF & 10nF (100V) IR should be calculated under 500 megohm microfarads or 10 GΩ.
[2] For Cap value 1.0µF (50 V) IR should be calculated under 100 megohm microfarads or 10 GΩ.
For Cap value 0.1uF (≤ 50V) IR should be calculated under 500 mohms or 10GOhms
[3] For Cap value 4.7µF (50 V) IR should be calculated under 100 megohm microfarads or 10 GΩ.
For Capacitance value 10nF (≤ 250V) IR should be calculated under 500 megohm microfarads or 10 GΩ.
For Capacitance value 100nF (250V & 200V) IR should be calculated under 500 megohm microfarads or 10 GΩ.
[4] For Capa value 4.7µF (50 V) IR should be calculated under 100 megohm microfarads or 10 GΩ.
For Capacitance value 220nF (≤50V) IR should be calculated under 500 megohm microfarads or 10 GΩ.

X7R Performance and Reliability: SMD Test Methods and Conditions cont.

<table>
<tr><th>Test</th><th>Reference</th><th>Test Condition</th><th>Limits</th></tr>
<tr><td>Temperature Coefficient of Capacitance (TCC)</td><td>KEMET Internal</td><td>C ≤ 10µF
Frequency: 1 kHz ±50 Hz
Voltage*: 1.0 ±0.2 V_{rms}, 0.5 ±0.2 V_{rms}, 0.2 ±0.1 V_{rms}
C > 10µF
Frequency: 120 Hz ±10 Hz
Voltage: 0.5 ±0.1 V_{rms}

* See part number specification sheet for voltage
<table>
<tr><th>Step</th><th>Temperature (°C)</th></tr>
<tr><td>1</td><td>+25°C</td></tr>
<tr><td>2</td><td>−55°C</td></tr>
<tr><td>3</td><td>+25°C (Reference)</td></tr>
<tr><td>4</td><td>+125°C</td></tr>
</table></td><td>Capacitance ±15% over −55°C to +125°C</td></tr>
<tr><td>Dielectric Withstanding Voltage (DWV)</td><td>KEMET Internal</td><td>250% of rated voltage
(5 ±1 seconds and charge/discharge not exceeding 50 mA)</td><td>Cap: Initial Limit
DF: Initial Limit
IR: Initial Limit

Withstand test voltage without insulation breakdown or damage.</td></tr>
<tr><td>Aging Rate (Maximum % Capacitance Loss/Decade Hour)</td><td>KEMET Internal</td><td>Capacitance measurements (including tolerance) are indexed to a referee time of 48 or 1,000 hours.
Please refer to a part number specific datasheet for referee time details.</td><td>Please refer to a part number specification sheet for specific Aging rate</td></tr>
<tr><td>Terminal Strength</td><td>KEMET Internal</td><td>Shear stress test per specific case size, Time: 60±1 seconds
<table>
<tr><th>Case Size</th><th>Force</th></tr>
<tr><td>0201</td><td>2N</td></tr>
<tr><td>0402</td><td>3N</td></tr>
<tr><td>0603</td><td>5N</td></tr>
<tr><td>0805</td><td>9N</td></tr>
<tr><td>≥1206</td><td>18N</td></tr>
</table>
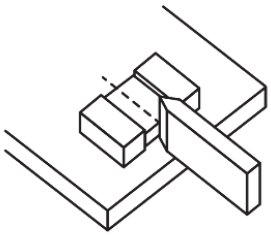 </td><td>No evidence of mechanical damage</td></tr>
<tr><td>Board Flex</td><td>AEC-Q200-005</td><td>Standard Termination system 2.0 mm
Flexible Termination System 3.0 mm
Test time: 60± 5 seconds
Ramp time: 1 mm/second
 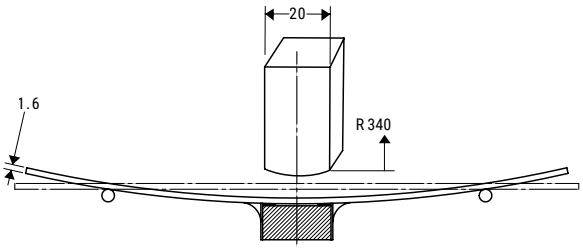
</td><td>No evidence of mechanical damage</td></tr>
</table>

X7R Performance and Reliability: SMD Test Methods and Conditions cont.

<table>
<tr><th>Test</th><th>Reference</th><th>Test Condition</th><th>Limits</th></tr>
<tr><td>Solderability</td><td>J-STD-002</td><td>Condition: 4 hours ± 15 minutes at 155°C dry bake apply all methods
Test 245 ±5°C (SnPb and Pb-Free)</td><td>Visual Inspection.
95% coverage on termination.
No leaching</td></tr>
<tr><td>Temperature Cycling</td><td>JESD22 Method JA-104</td><td>1,000 cycles (−55°C to +125°C)
2 – 3 cycles per hour
Soak Time 1 or 5 minutes</td><td>Measurement at 24 hours ±4 hours after test conclusion.
Cap: Initial Limit
DF: Initial Limit
IR: Initial Limit</td></tr>
<tr><td>Biased Humidity</td><td>MIL-STD-202 Method 103</td><td>Load Humidity:
1,000 hours 85°C/85% RH and rated voltage.

Low Volt Humidity:
1,000 hours 85C°/85% RH and 1.5 V.</td><td>Measurement at 24 hours ±4 hours after test conclusion.
Within Post Environmental Limits
Cap: ±20% shift
IR: 10% of Initial Limit

<table><tr><th colspan="2">DF Limits Maximum (%)</th></tr><tr><th>Initial</th><th>Post</th></tr><tr><td>2.5</td><td>3.0</td></tr><tr><td>3.5</td><td>5.0</td></tr><tr><td>5.0</td><td>7.5</td></tr><tr><td>10.0</td><td>20.0</td></tr></table></td></tr>
<tr><td>Moisture Resistance</td><td>MIL-STD-202 Method 106</td><td>Number of cycles required 10, 24 hours per cycle.
Steps 7a and 7b not required.</td><td>Measurement at 24 hours ±4 hours after test conclusion.
Within Post Environmental Limits
Cap: ±20% shift
IR: 10% of Initial Limit

<table><tr><th colspan="2">DF Limits Maximum (%)</th></tr><tr><th>Initial</th><th>Post</th></tr><tr><td>2.5</td><td>3.0</td></tr><tr><td>3.5</td><td>5.0</td></tr><tr><td>5.0</td><td>7.5</td></tr><tr><td>10.0</td><td>20.0</td></tr></table></td></tr>
<tr><td>Thermal Shock</td><td>MIL-STD-202 Method 107</td><td>Number of cycles required 5, (−55°C to 125°C)
Dwell time 15 minutes.</td><td>Cap: Initial Limit
DF: Initial Limit
IR: Initial Limit</td></tr>
</table>

X7R Performance and Reliability: SMD Test Methods and Conditions cont.

<table>
<tr><th>Test</th><th>Reference</th><th>Test Condition</th><th>Limits</th></tr>
<tr><td>High Temperature Life</td><td rowspan="2">MIL-STD-202 Method 108</td><td>1,000 hours at 125°C with 2 X rated voltage applied excluding the following:
<table>
<tr><th>Case Size</th><th>Capacitance</th><th>Applied Voltage</th></tr>
<tr><td>0603 & 0805</td><td>≥ 1.0 µF</td><td rowspan="2">1.5 X</td></tr>
<tr><td>1206 & 1210</td><td>≥ 10 µF</td></tr>
</table></td><td rowspan="2">Within Post Environmental Limits
Cap: ±20% shift
IR: 10% of Initial Limit
<table>
<tr><th colspan="2">DF Limits Maximum (%)</th></tr>
<tr><th>Initial</th><th>Post</th></tr>
<tr><td>2.5</td><td>3.0</td></tr>
<tr><td>3.5</td><td>5.0</td></tr>
<tr><td>5.0</td><td>7.5</td></tr>
<tr><td>10.0</td><td>20.0</td></tr>
</table></td></tr>
<tr><td>Storage Life</td><td>1,000 hours at 125°C, Unpowered</td></tr>
<tr><td>Vibration</td><td>MIL-STD-202 Method 204</td><td>5 g's for 20 minutes, 12 cycles each of 3 orientations.
Test from 10 – 2,000 Hz</td><td>Cap: Initial Limit
DF: Initial Limit
IR: Initial Limit</td></tr>
<tr><td>Mechanical Shock</td><td>MIL-STD-202 Method 213</td><td>1,500 g's 0.5 ms Half-sine,
Velocity Change 15.4 feet/second
(Condition F)</td><td>Cap: Initial Limit
DF: Initial Limit
IR: Initial Limit</td></tr>
<tr><td>Resistance to Solvents</td><td>MIL-STD-202 Method 215</td><td>Add Aqueous wash chemical OKEMCLEAN
(A 6% concentrated Oakite cleaner) or equivalent.
Do not use banned solvents.</td><td>Visual Inspection 10X
Readable marking,
no decoloration or stains.
No physical damage.</td></tr>
</table>

Storage & Handling

Ceramic chip capacitors should be stored in normal working environments. While the chips themselves are quite robust in other environments, solderability will be degraded by exposure to high temperatures, high humidity, corrosive atmospheres, and long term storage. In addition, packaging materials will be degraded by high temperature – reels may soften or warp and tape peel force may increase. KEMET recommends that maximum storage temperature not exceed 40°C and maximum storage humidity not exceed 70% relative humidity. Temperature fluctuations should be minimized to avoid condensation on the parts and atmospheres should be free of chlorine and sulfur bearing compounds. For optimized solderability chip stock should be used promptly, preferably within 1.5 years of receipt.

Construction (Typical)

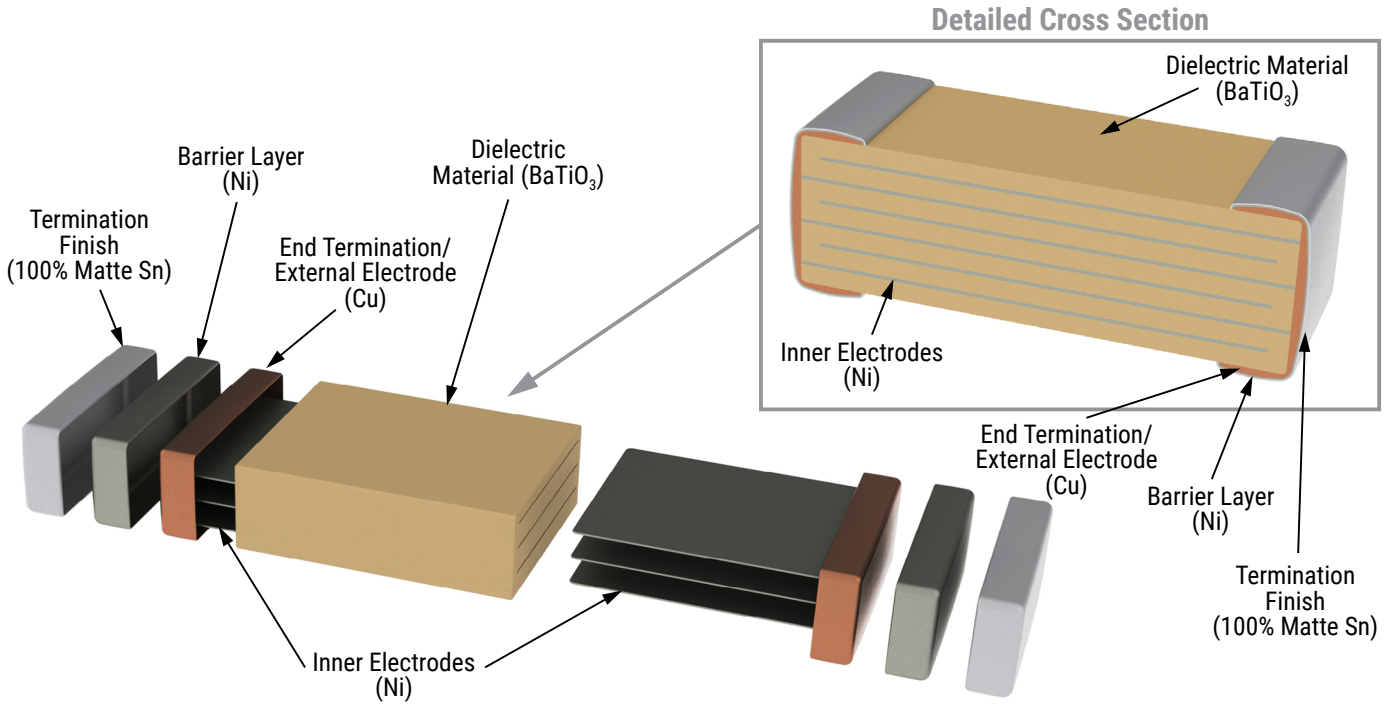

Capacitor Marking (Optional)

These surface mount multilayer ceramic capacitors are normally supplied unmarked. If required, they can be marked as an extra cost option. Marking is available on most KEMET devices, but must be requested using the correct ordering code identifier(s). If this option is requested, two sides of the ceramic body will be laser marked with a "K" to identify KEMET, followed by two characters (per EIA–198 - see table below) to identify the capacitance value. EIA 0603 case size devices are limited to the "K" character only.

Laser marking option is not available on:

- C0G, ultra stable X8R and Y5V dielectric devices.
- EIA 0402 case size devices.
- EIA 0603 case size devices with flexible termination option.
- KPS commercial and automotive grade stacked devices.
- X7R dielectric products in capacitance values outlined below.

EIA Case Size	Metric Size Code	Capacitance
0603	1608	≤ 170 pF
0805	2012	≤ 150 pF
1206	3216	≤ 910 pF
1210	3225	≤ 2,000 pF
1808	4520	≤ 3,900 pF
1812	4532	≤ 6,700 pF
1825	4564	≤ 0.018 µF
2220	5650	≤ 0.027 µF
2225	5664	≤ 0.033 µF

Marking appears in legible contrast. Illustrated below is an example of an MLCC with laser marking of "KA8", which designates a KEMET device with rated capacitance of 100 µF. Orientation of marking is vendor optional.

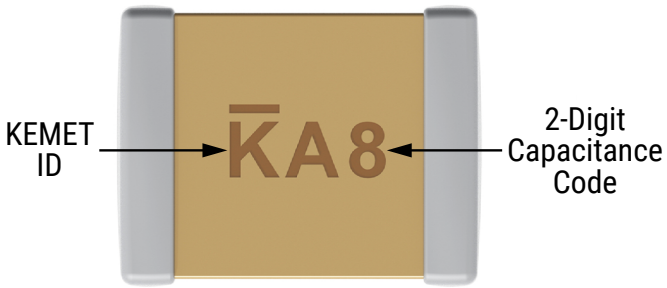

Capacitor Marking (Optional) cont.

Capacitance (pF) For Various Alpha/Numeral Identifiers										
Alpha Character	Numeral									
	9	0	1	2	3	4	5	6	7	8
	Capacitance (pF)									
A	0.10	1.0	10	100	1,000	10,000	100,000	1,000,000	10,000,000	100,000,000
B	0.11	1.1	11	110	1,100	11,000	110,000	1,100,000	11,000,000	110,000,000
C	0.12	1.2	12	120	1,200	12,000	120,000	1,200,000	12,000,000	120,000,000
D	0.13	1.3	13	130	1,300	13,000	130,000	1,300,000	13,000,000	130,000,000
E	0.15	1.5	15	150	1,500	15,000	150,000	1,500,000	15,000,000	150,000,000
F	0.16	1.6	16	160	1,600	16,000	160,000	1,600,000	16,000,000	160,000,000
G	0.18	1.8	18	180	1,800	18,000	180,000	1,800,000	18,000,000	180,000,000
H	0.20	2.0	20	200	2,000	20,000	200,000	2,000,000	20,000,000	200,000,000
J	0.22	2.2	22	220	2,200	22,000	220,000	2,200,000	22,000,000	220,000,000
K	0.24	2.4	24	240	2,400	24,000	240,000	2,400,000	24,000,000	240,000,000
L	0.27	2.7	27	270	2,700	27,000	270,000	2,700,000	27,000,000	270,000,000
M	0.30	3.0	30	300	3,000	30,000	300,000	3,000,000	30,000,000	300,000,000
N	0.33	3.3	33	330	3,300	33,000	330,000	3,300,000	33,000,000	330,000,000
P	0.36	3.6	36	360	3,600	36,000	360,000	3,600,000	36,000,000	360,000,000
Q	0.39	3.9	39	390	3,900	39,000	390,000	3,900,000	39,000,000	390,000,000
R	0.43	4.3	43	430	4,300	43,000	430,000	4,300,000	43,000,000	430,000,000
S	0.47	4.7	47	470	4,700	47,000	470,000	4,700,000	47,000,000	470,000,000
T	0.51	5.1	51	510	5,100	51,000	510,000	5,100,000	51,000,000	510,000,000
U	0.56	5.6	56	560	5,600	56,000	560,000	5,600,000	56,000,000	560,000,000
V	0.62	6.2	62	620	6,200	62,000	620,000	6,200,000	62,000,000	620,000,000
W	0.68	6.8	68	680	6,800	68,000	680,000	6,800,000	68,000,000	680,000,000
X	0.75	7.5	75	750	7,500	75,000	750,000	7,500,000	75,000,000	750,000,000
Y	0.82	8.2	82	820	8,200	82,000	820,000	8,200,000	82,000,000	820,000,000
Z	0.91	9.1	91	910	9,100	91,000	910,000	9,100,000	91,000,000	910,000,000
a	0.25	2.5	25	250	2,500	25,000	250,000	2,500,000	25,000,000	250,000,000
b	0.35	3.5	35	350	3,500	35,000	350,000	3,500,000	35,000,000	350,000,000
d	0.40	4.0	40	400	4,000	40,000	400,000	4,000,000	40,000,000	400,000,000
e	0.45	4.5	45	450	4,500	45,000	450,000	4,500,000	45,000,000	450,000,000
f	0.50	5.0	50	500	5,000	50,000	500,000	5,000,000	50,000,000	500,000,000
m	0.60	6.0	60	600	6,000	60,000	600,000	6,000,000	60,000,000	600,000,000
n	0.70	7.0	70	700	7,000	70,000	700,000	7,000,000	70,000,000	700,000,000
t	0.80	8.0	80	800	8,000	80,000	800,000	8,000,000	80,000,000	800,000,000
y	0.90	9.0	90	900	9,000	90,000	900,000	9,000,000	90,000,000	900,000,000

Tape & Reel Packaging Information

KEMET offers multilayer ceramic chip capacitors packaged in 8, 12 and 16 mm tape on 7" and 13" reels in accordance with EIA Standard 481. This packaging system is compatible with all tape-fed automatic pick and place systems. See Table 2 for details on reeling quantities for commercial chips.

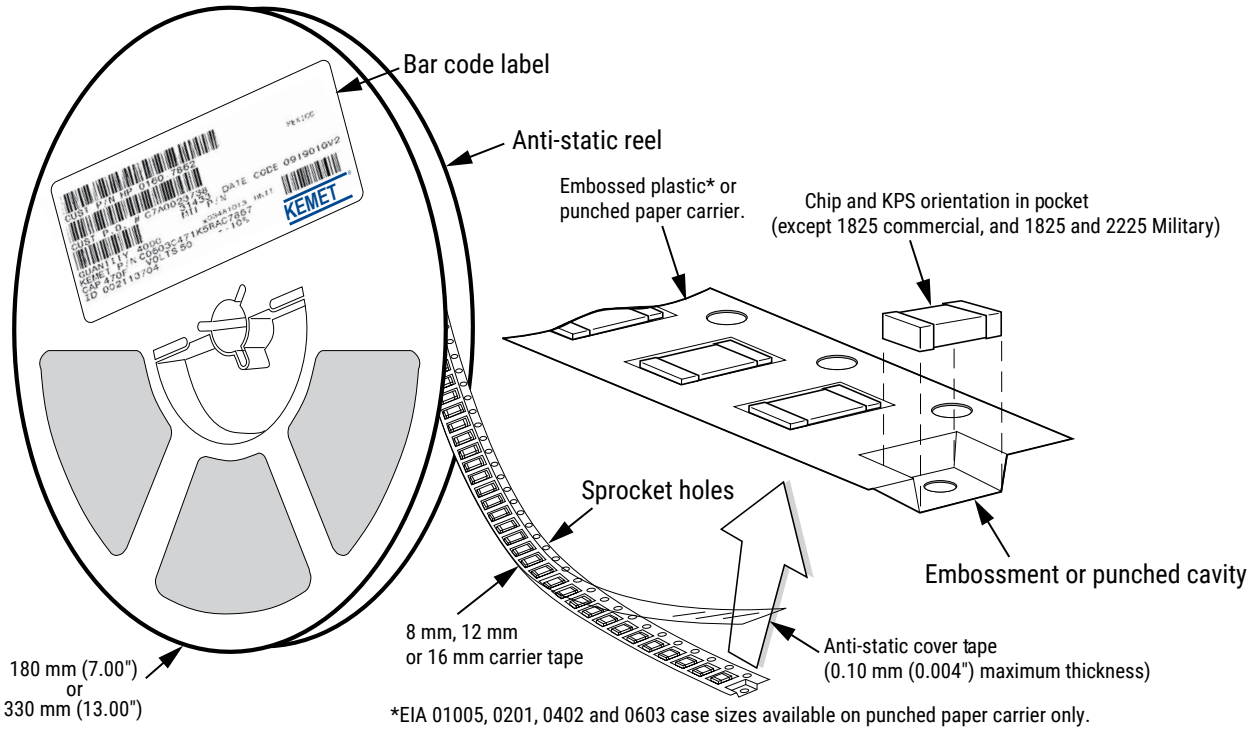

*EIA 01005, 0201, 0402 and 0603 case sizes available on punched paper carrier only.

Table 5 – Carrier Tape Configuration, Embossed Plastic & Punched Paper (mm)

EIA Case Size	Tape Size (W)*	Embossed Plastic		Punched Paper	
		7" Reel	13" Reel	7" Reel	13" Reel
		Pitch (P_1)*		Pitch (P_1)*	
01005 – 0402	8			2	2
0603	8			4	4
0805	8	4	4	4	4
1206 – 1210	8	4	4	4	4
1805 – 1808	12	4	4		
≥ 1812	12	8	8		
KPS 1210	12	8	8		
KPS 1812 and 2220	16	12	12		
Array 0612	8	4	4		

**Refer to Figures 1 and 2 for W and P_1 carrier tape reference locations.*
**Refer to Tables 6 and 7 for tolerance specifications.*

Figure 1 – Embossed (Plastic) Carrier Tape Dimensions

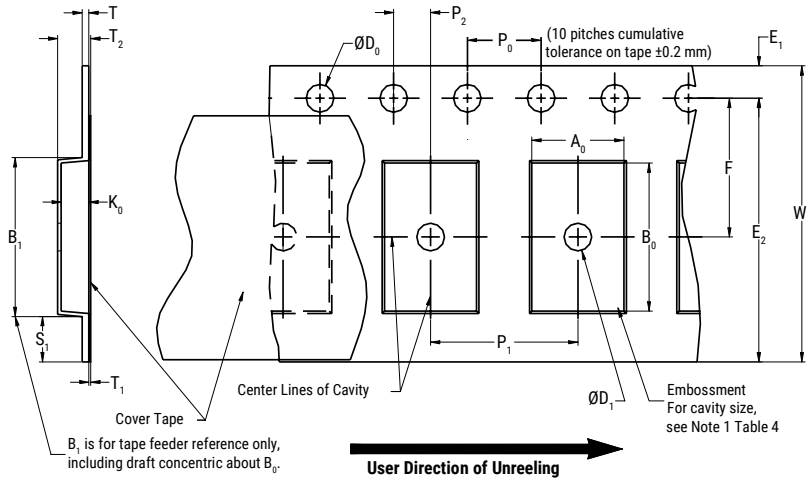

Table 6 – Embossed (Plastic) Carrier Tape Dimensions

Metric will govern

Constant Dimensions — Millimeters (Inches)									
Tape Size	D_0	D_1 Minimum Note 1	E_1	P_0	P_2	R Reference Note 2	S_1 Minimum Note 3	T Maximum	T_1 Maximum
8 mm	1.5 +0.10/−0.0 (0.059 +0.004/−0.0)	1.0 (0.039)	1.75 ±0.10 (0.069 ±0.004)	4.0 ±0.10 (0.157 ±0.004)	2.0 ±0.05 (0.079 ±0.002)	25.0 (0.984)	0.600 (0.024)	0.600 (0.024)	0.100 (0.004)
12 mm		1.5 (0.059)				30 (1.181)			
16 mm									

Variable Dimensions — Millimeters (Inches)								
Tape Size	Pitch	B_1 Maximum Note 4	E_2 Minimum	F	P_1	T_2 Maximum	W Maximum	A_0,B_0 & K_0
8 mm	Single (4 mm)	4.35 (0.171)	6.25 (0.246)	3.5 ±0.05 (0.138 ±0.002)	4.0 ±0.10 (0.157 ±0.004)	2.5 (0.098)	8.3 (0.327)	Note 5
12 mm	Single (4 mm) and double (8 mm)	8.2 (0.323)	10.25 (0.404)	5.5 ±0.05 (0.217 ±0.002)	8.0 ±0.10 (0.315 ±0.004)	4.6 (0.181)	12.3 (0.484)	
16 mm	Triple (12 mm)	12.1 (0.476)	14.25 (0.561)	7.5 ±0.05 (0.138 ±0.002)	12.0 ±0.10 (0.157 ±0.004)	4.6 (0.181)	16.3 (0.642)	

1. The embossment hole location shall be measured from the sprocket hole controlling the location of the embossment. Dimensions of the embossment location and the hole location shall be applied independently of each other.

2. The tape with or without components shall pass around R without damage (see Figure 6.)

3. If S_1 < 1.0 mm, there may not be enough area for a cover tape to be properly applied (see EIA Standard 481, paragraph 4.3, section b.)

4. B_1 dimension is a reference dimension for tape feeder clearance only.

5. The cavity defined by A_0, B_0 and K_0 shall surround the component with sufficient clearance that:

(a) the component does not protrude above the top surface of the carrier tape.

(b) the component can be removed from the cavity in a vertical direction without mechanical restriction, after the top cover tape has been removed.

(c) rotation of the component is limited to 20° maximum for 8 and 12 mm tapes and 10° maximum for 16 mm tapes (see Figure 3.)

(d) lateral movement of the component is restricted to 0.5 mm maximum for 8 and 12 mm wide tape and to 1.0 mm maximum for 16 mm tape (see Figure 4.)

(e) for KPS product, A_0 and B_0 are measured on a plane 0.3 mm above the bottom of the pocket.

(f) see addendum in EIA Standard 481 for standards relating to more precise taping requirements.

Figure 2 – Punched (Paper) Carrier Tape Dimensions

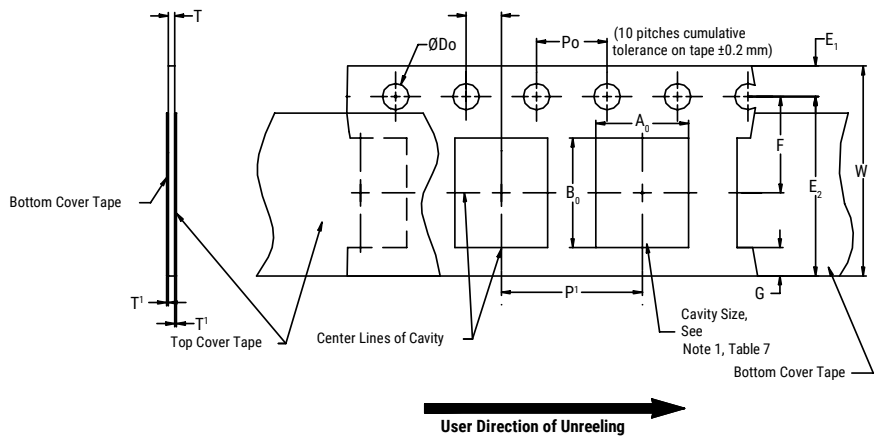

Table 7 – Punched (Paper) Carrier Tape Dimensions

Metric will govern

Constant Dimensions — Millimeters (Inches)							
Tape Size	D_0	E_1	P_0	P_2	T_1 Maximum	G Minimum	R Reference Note 2
8 mm	1.5 +0.10 -0.0 (0.059 +0.004 -0.0)	1.75 ±0.10 (0.069 ±0.004)	4.0 ±0.10 (0.157 ±0.004)	2.0 ±0.05 (0.079 ±0.002)	0.10 (0.004) maximum	0.75 (0.030)	25 (0.984)
Variable Dimensions — Millimeters (Inches)							
Tape Size	Pitch	E2 Minimum	F	P_1	T Maximum	W Maximum	A_0 B_0
8 mm	Single (4 mm)	6.25 (0.246)	3.5 ±0.05 (0.138 ±0.002)	4.0 ±0.10 (0.157 ±0.004)	1.1 (0.043)	8.3 (0.327)	Note 1

1. The cavity defined by A_0, B_0 and T shall surround the component with sufficient clearance that:

a) the component does not protrude beyond either surface of the carrier tape.

b) the component can be removed from the cavity in a vertical direction without mechanical restriction, after the top cover tape has been removed.

c) rotation of the component is limited to 20° maximum (see Figure 3.)

d) lateral movement of the component is restricted to 0.5 mm maximum (see Figure 4.)

e) see addendum in EIA Standard 481 for standards relating to more precise taping requirements.

2. The tape with or without components shall pass around R without damage (see Figure 6.)

Packaging Information Performance Notes

1. Cover Tape Break Force: 1.0 kg minimum.
2. Cover Tape Peel Strength: The total peel strength of the cover tape from the carrier tape shall be:

Tape Width	Peel Strength
8 mm	0.1 to 1.0 newton (10 to 100 gf)
12 and 16 mm	0.1 to 1.3 newton (10 to 130 gf)

The direction of the pull shall be opposite the direction of the carrier tape travel. The pull angle of the carrier tape shall be 165° to 180° from the plane of the carrier tape. During peeling, the carrier and/or cover tape shall be pulled at a velocity of 300 ±10 mm/minute.
3. Labeling: Bar code labeling (standard or custom) shall be on the side of the reel opposite the sprocket holes. *Refer to EIA Standards 556 and 624*.

Figure 3 – Maximum Component Rotation

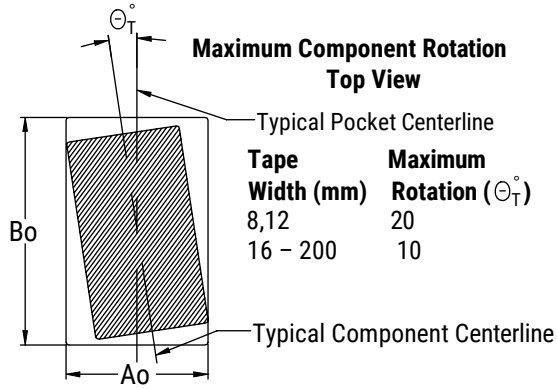

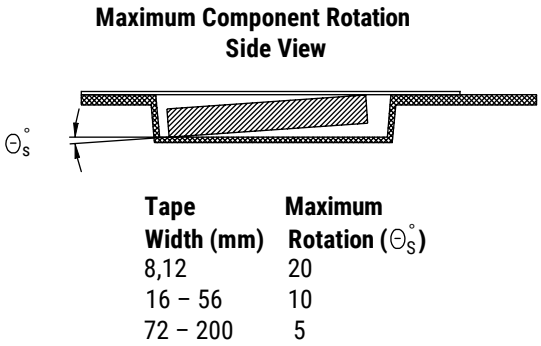

Figure 4 – Maximum Lateral Movement

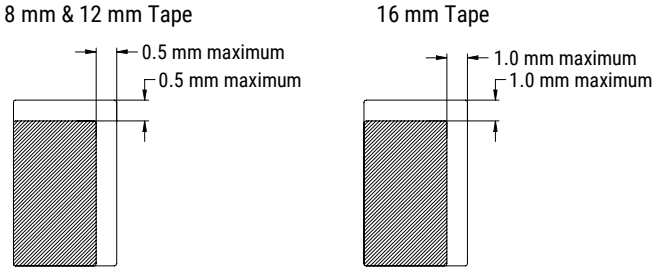

Figure 5 – Bending Radius

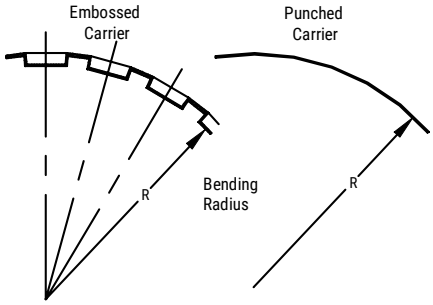

Figure 6 – Reel Dimensions

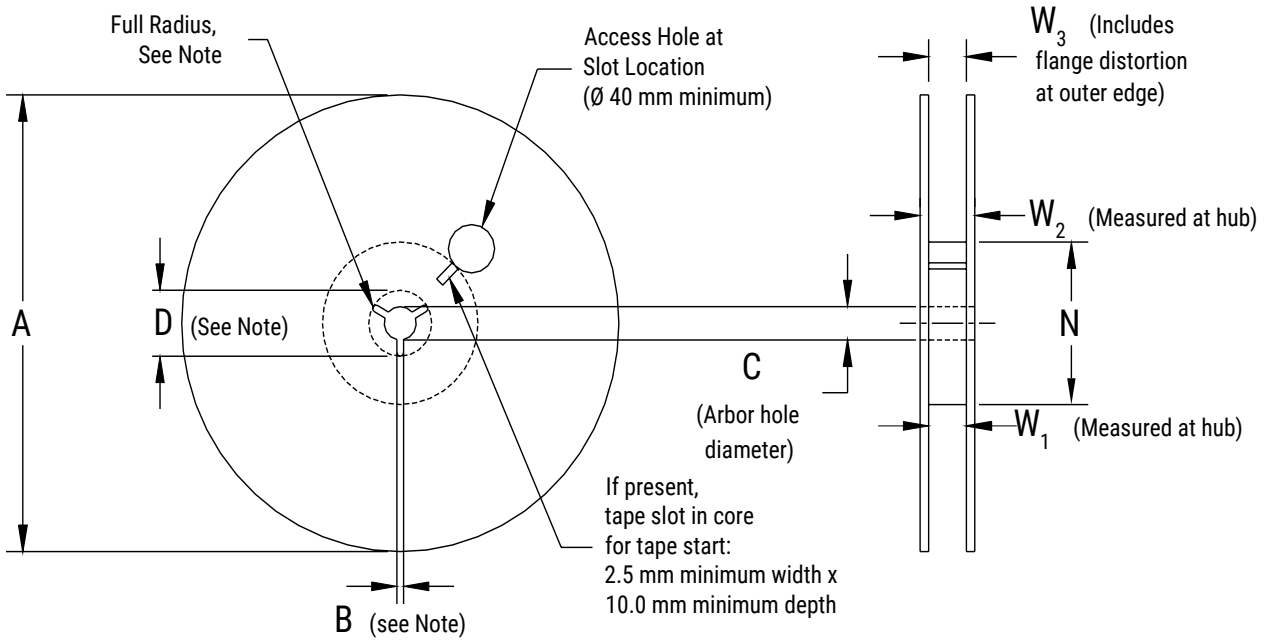

Note: Drive spokes optional; if used, dimensions B and D shall apply.

Table 8 – Reel Dimensions

Metric will govern

Constant Dimensions — Millimeters (Inches)				
Tape Size	A	B Minimum	C	D Minimum
8 mm	178 ±0.20 (7.008 ±0.008) or 330 ±0.20 (13.000 ±0.008)	1.5 (0.059)	13.0 +0.5/−0.2 (0.521 +0.02/−0.008)	20.2 (0.795)
12 mm				
16 mm				

Variable Dimensions — Millimeters (Inches)				
Tape Size	N Minimum	W_1	W_2 Maximum	W_3
8 mm	50 (1.969)	8.4 +1.5/−0.0 (0.331 +0.059/−0.0)	14.4 (0.567)	Shall accommodate tape width without interference
12 mm		12.4 +2.0/−0.0 (0.488 +0.078/−0.0)	18.4 (0.724)	
16 mm		16.4 +2.0/−0.0 (0.646 +0.078/−0.0)	22.4 (0.882)	

Figure 7 – Tape Leader & Trailer Dimensions

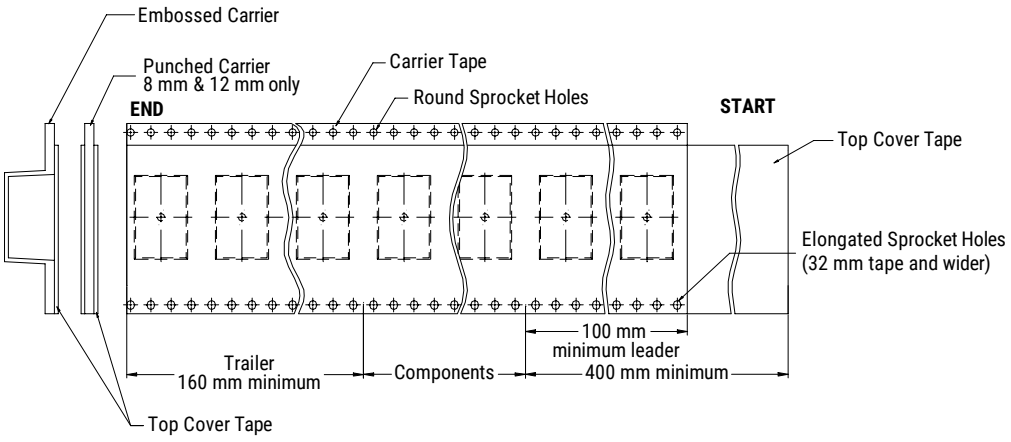

Figure 8 – Maximum Camber

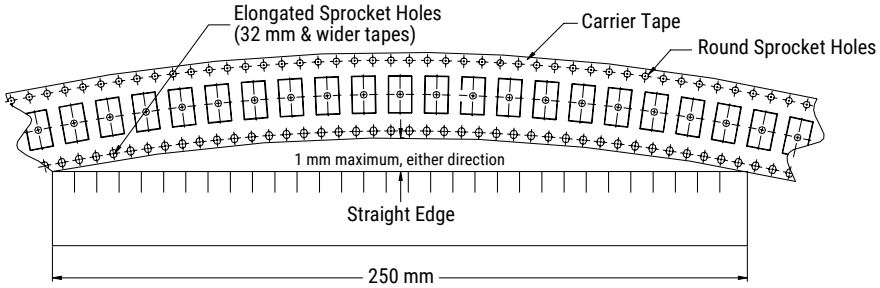

KEMET Electronics Corporation Sales Offices

For a complete list of our global sales offices, please visit https://www.yageogroup.com/SalesResources/SalesOffices

Disclaimer

YAGEO Corporation and its affiliates do not recommend the use of commercial or automotive grade products for high reliability applications or manned space flight.

All product specifications, statements, information and data (collectively, the "Information") in this datasheet are subject to change. The customer is responsible for checking and verifying the extent to which the Information contained in this publication is applicable to an order at the time the order is placed. All Information given herein is believed to be accurate and reliable, but it is presented without guarantee, warranty, or responsibility of any kind, expressed or implied.

Statements of suitability for certain applications are based on KEMET Electronics Corporation's ("KEMET") knowledge of typical operating conditions for such applications, but are not intended to constitute – and KEMET specifically disclaims – any warranty concerning suitability for a specific customer application or use. The Information is intended for use only by customers who have the requisite experience and capability to determine the correct products for their application. Any technical advice inferred from this Information or otherwise provided by KEMET with reference to the use of KEMET's products is given gratis, and KEMET assumes no obligation or liability for the advice given or results obtained.

Although KEMET designs and manufactures its products to the most stringent quality and safety standards, given the current state of the art, isolated component failures may still occur. Accordingly, customer applications which require a high degree of reliability or safety should employ suitable designs or other safeguards (such as installation of protective circuitry or redundancies) in order to ensure that the failure of an electrical component does not result in a risk of personal injury or property damage.

Although all product–related warnings, cautions and notes must be observed, the customer should not assume that all safety measures are indicated or that other measures may not be required.

KEMET is a registered trademark of KEMET Electronics Corporation.

Looking for pricing, stock, or lifecycle information?

Click below to explore more details on WIN SOURCE:

- View C0805C103J1RACTU on WIN SOURCE
- Kemet Information

Optimize Your Supply Chain with WIN SOURCE Solutions

- Global Sourcing Solution
- Obsolete Management
- Cost Control Management
- Shortage Management
- Alternative Solution
- Excess Inventory Management