THE DATASHEET OF

M2GL050-1FGG896I

www.win-source.net 0086-755-83957316

IGLOO 2 FPGA and SmartFusion 2 SoC FPGA

INTRODUCTION

This datasheet covers the electrical AC and DC specifications for five temperature grades of devices (part number prefixes M2GL005, M2GL010, M2GL025, M2GL050, M2GL060, M2GL090, M2GL150) and four temperature grades of devices (part number prefixes M2S005, M2S010, M2S025, M2S050, M2S060, M2S090 and M2S150). AC and DC electrical characteristics and parametric values, unless otherwise noted, apply to all the temperature grade devices. Users are expected to close timing using SmartTime for the speed and temperate grade of the device chosen.

Microchip's mainstream SmartFusion® 2 SoC and IGLOO® 2 FPGA families integrate an industry standard 4-input LookUp Table (LUT)-based FPGA fabric with integrated math blocks, multiple embedded memory blocks, and high-performance SerDes communication interfaces on a single chip. Both families benefit from low-power flash technology and are the most secure and reliable FPGAs in the industry. These next generation devices offer up to 150K Logic Elements, up to 5 MBs of embedded RAM, up to 16 SerDes lanes, up to four PCI Express Gen 2 endpoints, and integrated hard DDR3 memory controllers with error correction.

SmartFusion 2 devices integrate an entire low-power, real-time Microcontroller Subsystem (MSS) with a rich set of industry-standard peripherals including Ethernet, USB, and CAN, while IGLOO 2 devices integrate a high-performance memory subsystem with on-chip flash, 32 KB embedded SRAM, and multiple DMA controllers.

© 2026 Microchip Technology Inc. and its subsidiaries

Contents

INTRODUCTION 1
1.0 Device Status 3
2.0 References 4
3.0 Electrical Specifications 5
3.1 Operating Conditions 5
3.2 Power Consumption 11
3.3 Average Fabric Temperature and Voltage Derating Factors 13
3.4 Timing Model 13
3.5 User I/O Characteristics 15
3.6 Memory Interface and Voltage Referenced I/O Standards 36
3.7 Differential I/O Standards 49
3.8 I/O Register Specifications 58
3.9 DDR Module Specification 62
3.10 Logic Element Specifications 66
3.11 Global Resource Characteristics 68
3.12 FPGA Fabric SRAM 69
3.13 Programming Times 83
3.14 Math Block Timing Characteristics 84
3.15 Embedded NVM (eNVM) Characteristics 85
3.16 SRAM PUF 85
3.17 Non-Deterministic Random Bit Generator (NRBG) Characteristics 86
3.18 Cryptographic Block Characteristics 87
3.19 Crystal Oscillator 87
3.20 On-Chip Oscillator 89
3.21 Clock Conditioning Circuits (CCC) 90
3.22 JTAG 93
3.23 System Controller SPI Characteristics 94
3.24 Power-up to Functional Times 95
3.25 DEVRST_N Characteristics 97
3.26 DEVRST_N to Functional Times 98
3.27 Flash*Freeze Timing Characteristics 100
3.28 DDR Memory Interface Characteristics 101
3.29 SFP Transceiver Characteristics 101
3.30 SerDes Electrical and Timing AC and DC Characteristics 101
3.31 SmartFusion 2 Specifications 104
3.32 CAN Controller Characteristics 108
3.33 USB Characteristics 108
3.34 MMUART Characteristics 108
3.35 IGLOO 2 Specifications 108
Appendix A: Revision History 111

© 2026 Microchip Technology Inc. and its subsidiaries.

1.0 DEVICE STATUS

The following table lists the design security densities and development status of the IGLOO 2 FPGA and SmartFusion 2 SoC FPGA devices,

TABLE 1-1: IGLOO 2 AND SMARTFUSION 2 DESIGN SECURITY DENSITIES

Design Security Device Densities	Status
005	Production
010, 010T	Production
025, 025T	Production
050, 050T	Production
060, 060T	Production
090, 090T	Production
150, 150T	Production

The following table lists the data security densities and development status of the IGLOO 2 FPGA and SmartFusion 2 SoC FPGA devices.

TABLE 1-2: IGLOO 2 AND SMARTFUSION 2 DATA SECURITY DENSITIES

Data Security Device Densities	Status
005S	Production
010TS	Production
025TS	Production
050TS	Production
060TS	Production
090TS	Production
150TS	Production

2.0 REFERENCES

The following documents are recommended references:

- *PB0121: IGLOO2 Product Brief*
- *DS0124: IGLOO2 Pin Descriptions*
- *PB0115: SmartFusion2 SoC FPGA Product Brief*
- *DS0115: SmartFusion2 Pin Descriptions*

All product documentation for IGLOO 2 and SmartFusion 2 is available at:

- For IGLOO 2: https://www.microchip.com/en-us/products/fpgas-and-plds/fpgas/igloo-2-fpgas#Documentation
- For SmartFusion 2: https://www.microchip.com/en-us/products/fpgas-and-plds/system-on-chip-fpgas/smartfusion-2-fpgas#Documentation

© 2026 Microchip Technology Inc. and its subsidiaries

3.0 ELECTRICAL SPECIFICATIONS

3.1 Operating Conditions

The following table lists the stress limits. Stress applied above the specified limit may cause permanent damage to the device. Exposure to absolute maximum rating conditions for extended periods may affect device reliability.

Absolute maximum ratings are stress ratings only; functional operation of the device at these or any other conditions beyond those listed under the recommended operating conditions specified in the following table are not implied.

TABLE 3-1: ABSOLUTE MAXIMUM RATINGS

Parameter	Symbol	Min.	Max.	Unit
DC core supply voltage. Must always power this pin.	V_{DD}	–0.3	1.32	V
Power supply for charge pumps (for normal operation and programming). Must always power this pin.	V_{PP}	–0.3	3.63	V
Analog power pad for MDDR PLL	MSS_MDDR_PLL_VDDA	–0.3	3.63	V
Analog power pad for MDDR PLL	HPMS_MDDR_PLL_VDDA	–0.3	3.63	V
Analog power pad for FDDR PLL	FDDR_PLL_VDDA	–0.3	3.63	V
Analog power pad for MDDR PLL	PLL0_PLL1_MSS_MDDR_VDDA	–0.3	3.63	V
Analog power pad for MDDR PLL	PLL0_PLL1_HPMS_MDDR_VDDA	–0.3	3.63	V
Analog power pad for PLL0–5	CCC_XX[01]_PLL_VDDA	–0.3	3.63	V
High supply voltage for PLL SerDes[01]	SERDES_[01]_PLL_VDDA	–0.3	3.63	V
Analog power for SerDes[01] PLL lane0 to lane3. This is a 2.5V SerDes internal PLL supply.	SERDES_[01]_L[0123]_VDDAPLL	–0.3	2.75	V
TX/RX analog I/O voltage. Low voltage power for the lanes of SerDesIF0. This is a 1.2V SerDes PMA supply.	SERDES_[01]_L[0123]_VDDAIO	–0.3	1.32	V
PCIe/PCS power supply	SERDES_[01]_VDD	–0.3	1.32	V
DC FPGA I/O buffer supply voltage for MSIO I/O bank	V_{DDIx}	–0.3	3.63	V
DC FPGA I/O buffer supply voltage for MSIOD/DDRIO I/O banks	V_{DDIx}	–0.3	2.75	V
I/O Input voltage for MSIO I/O bank	V_I	–0.3	3.63	V
I/O Input voltage for MSIOD/DDRIO I/O bank	V_I	–0.3	2.75	V
Analog sense circuit supply of embedded nonvolatile memory (eNVM). Must be shorted to V_{PP}.	V_{PPNVM}	–0.3	3.63	V
Storage temperature[1]	T_{STG}	–65	150	°C
Junction temperature	T_J	–55	135	°C

1 See Table 3-3 for flash programming and retention maximum limits. See Table 3-2 for recommended operating conditions.

TABLE 3-2: RECOMMENDED OPERATING CONDITIONS[1, 2]

Parameter	Symbol	Min.	Typ.	Max.	Unit	Conditions
Operating junction temperature	T_J	0	25	85	°C	Commercial
		–40	25	100	°C	Industrial
Programming junction temperatures[3]	T_J	0	25	85	°C	Commercial
		–40	25	100	°C	Industrial
DC core supply voltage. Must always power this pin.	V_{DD}	1.14	1.2	1.26	V	
Power supply for charge pumps (for normal operation and programming) for the 005, 010, 025, 050, 060 devices	V_{PP}	2.375	2.5	2.625	V	2.5V range
		3.15	3.3	3.45	V	3.3V range

TABLE 3-2: RECOMMENDED OPERATING CONDITIONS[1, 2] (CONTINUED)

Parameter	Symbol	Min.	Typ.	Max.	Unit	Conditions
Power supply for charge pumps (for normal operation and programming) for the 090 and 150 devices	V_{PP}	3.15	3.3	3.45	V	3.3V range
Analog power pad for MDDR PLL	MSS_MDDR_PLL_VDDA	2.375	2.5	2.625	V	2.5V range
		3.15	3.3	3.45	V	3.3V range
Analog power pad for MDDR PLL	HPMS_MDDR_PLL_VDDA	2.375	2.5	2.625	V	2.5V range
		3.15	3.3	3.45	V	3.3V range
Analog power pad for FDDR PLL	FDDR_PLL_VDDA	2.375	2.5	2.625	V	2.5V range
		3.15	3.3	3.45	V	3.3V range
Analog power pad for MDDR PLL	PLL0_PLL1_MSS_MDDR_-VDDA	2.375	2.5	2.625	V	2.5V range
		3.15	3.3	3.45	V	3.3V range
Analog power pad for MDDR PLL	PLL0_PLL1_HPMS_MD-DR_VDDA	2.375	2.5	2.625	V	2.5V range
		3.15	3.3	3.45	V	3.3V range
Analog power pad for PLL0 to PLL5	CCC_XX[01]_PLL_VDDA	2.375	2.5	2.625	V	2.5V range
		3.15	3.3	3.45	V	3.3V range
High supply voltage for PLL Ser-Des[01]	SERDES_[01]_PLL_VDDA	2.375	2.5	2.625	V	2.5V range
		3.15	3.3	3.45	V	3.3V range
Analog power for SerDes[01] PLL Lane 0 to Lane 3. This is a 2.5V Ser-Des internal PLL supply.	SERDES_[01]_L[0123]_VD-DAPLL	2.375	2.5	2.625	V	—
TX/RX analog I/O voltage. Low voltage power for the lanes of SerDesIF0. This is a 1.2V SerDes PMA supply.	SERDES_[01]_L[0123]_VD-DAIO	1.14	1.2	1.26	V	—
PCIe/PCS power supply	SERDES_[01]_VDD	1.14	1.2	1.26	V	—
1.2V DC supply voltage	V_{DDIx}	1.14	1.2	1.26	V	—
1.5V DC supply voltage	V_{DDIx}	1.425	1.5	1.575	V	—
1.8V DC supply voltage	V_{DDIx}	1.71	1.8	1.89	V	—
2.5V DC supply voltage	V_{DDIx}	2.375	2.5	2.625	V	—
3.3V DC supply voltage	V_{DDIx}	3.15	3.3	3.45	V	—
LVDS differential I/O	V_{DDIx}	2.375	2.5	3.45	V	—
B-LVDS, M-LVDS, Mini-LVDS, RSDS differential I/O	V_{DDIx}	2.375	2.5	2.625	V	—
LVPECL differential I/O	V_{DDIx}	3.15	3.3	3.45	V	—
Reference voltage supply for FDDR and MDDR	V_{REFx}	0.49 × V_{DDIx}	0.5 × V_{DDIx}	0.51 × V_{DDIx}	V	—
Analog sense circuit supply of embedded nonvolatile memory (eNVM). Must be shorted to V_{PP}.	V_{PPNVM}	2.375	2.5	2.625	V	2.5V range
		3.15	3.3	3.45	V	3.3V range

1 The SERDES_[01]_VDD supply must be connected to V_{DD}.

2 This product is designed and validated for operation within the junction temperature (T_J) range specified in the Recommended Operating Conditions in this datasheet. Device functionality and performance outside this recommended operating range are not supported. Customers should account for the temperature difference between ambient (T_A) and junction (T_J) in their thermal environment and specific use case, which may result in a different and typically narrower ambient (T_A) operating temperature range.

3 Programming at Industrial temperature range is available only with V_{PP} = 3.3V.

Note: All power supply ramps must be strictly monotonic, without plateaus.

© 2026 Microchip Technology Inc. and its subsidiaries

TABLE 3-3: FPGA OPERATING LIMITS ([2,3, 4, 5])

Product Grade	Element	Programming Temperature	Operating Temperature	Programming Cycles	Digest Temperature	Digest Cycles	Retention (Biased/ Unbiased)
Commercial	FPGA	Min. T_J = 0 °C Max. T_J = 85 °C	Min. T_J = 0 °C Max. T_J = 85 °C	500	Min. T_J = 0 °C Max. T_J = 85 °C	2000	20 years
Industrial[1]	FPGA	Min. T_J = –40 °C Max. T_J = 100 °C	Min. T_J = –40 °C Max. T_J = 100 °C	500	Min. T_J = –40 °C Max. T_J = 100 °C	2000	20 years

Note 1: Programming at Industrial temperature range is available only with V_{PP} = 3.3V.

2: The device will have 20 years of retention after 500 programming cycles.

3: Digest verifies integrity and is a cryptographic hash of programmed nonvolatile data.

4: If your product qualification requires accelerated programming cycles, see the Microchip FPGA Reliability Report about recommended methodologies. To get a copy of Microchip FPGA Reliability Report contact Tech Support: https://microchipsupport.force.com/s/.

5: The SmartFusion® 2 and IGLOO® 2 FPGA Retention Calculator is on Secure Document Extranet (SDE) portal.

6: The purpose of the the SmartFusion® 2 and IGLOO® 2 retention lifetime calculator is to allow the user to model their system's total life cycle; from storage to deployment to operation. Applies to both biased/powered and unbiased/unpowered conditions.

7: Retention lifetime is the total time the device sees over the life of the product starting from the device Date Code onwards, including time spent in storage, or deployed.

The following table lists the embedded operating flash limits.

TABLE 3-4: EMBEDDED OPERATING FLASH LIMITS

Product Grade	Element	Programming Temperature	Maximum Operating Temperature	Programming Cycles	Retention (Biased/ Unbiased)
Commercial	Embedded flash	Min. T_J = 0 °C Max. T_J = 85 °C	Min. T_J = 0 °C Max. T_J = 85 °C	< 1000 cycles per page, up to two million cycles per eNVM array	20 years
			Min. T_J = 0 °C Max. T_J = 85 °C	< 10000 cycles per page, up to 20 million cycles per eNVM array	10 years
Industrial	Embedded flash	Min. T_J = –40 °C Max. T_J = 100 °C	Min T_J = –40 °C Max T_J = 100 °C	< 1000 cycles per page, up to two million cycles per eNVM array	20 years
			Min. T_J = –40 °C Ma.x. T_J = 100 °C	< 10000 cycles per page, up to 20 million cycles per eNVM array	10 years

Note: If your product qualification requires accelerated programming cycles, see the Microchip FPGA Reliability Report about recommended methodologies. To get a copy of Microchip FPGA Reliability Report contact Tech Support: *https://microchipsupport.force.com/s/*.

TABLE 3-5: DEVICE STORAGE TEMPERATURE AND RETENTION

Product Grade	Storage Temperature (Tstg)	Retention

TABLE 3-5: DEVICE STORAGE TEMPERATURE AND RETENTION

Commercial	Min. T_J = 0 °C Max. T_J = 85 °C	20 years
Industrial	Min. T_J = –40 °C Max. T_J = 100 °C	20 years

TABLE 3-6: HIGH TEMPERATURE DATA RETENTION (HTR) LIFETIME

T_J (C)	HTR Lifetime[1] (yrs)
90	20.5
95	20.5
100	20.5
105	17.0
110	15.0
115	13.0
120	11.5
125	10.0
130	8.0
135	6.0
140	4.5
145	3.0
150	1.5

1 HTR Lifetime is the period during which a verify failure is not expected due to flash leakage.

FIGURE 3-1: HIGH TEMPERATURE DATA RETENTION (HTR)

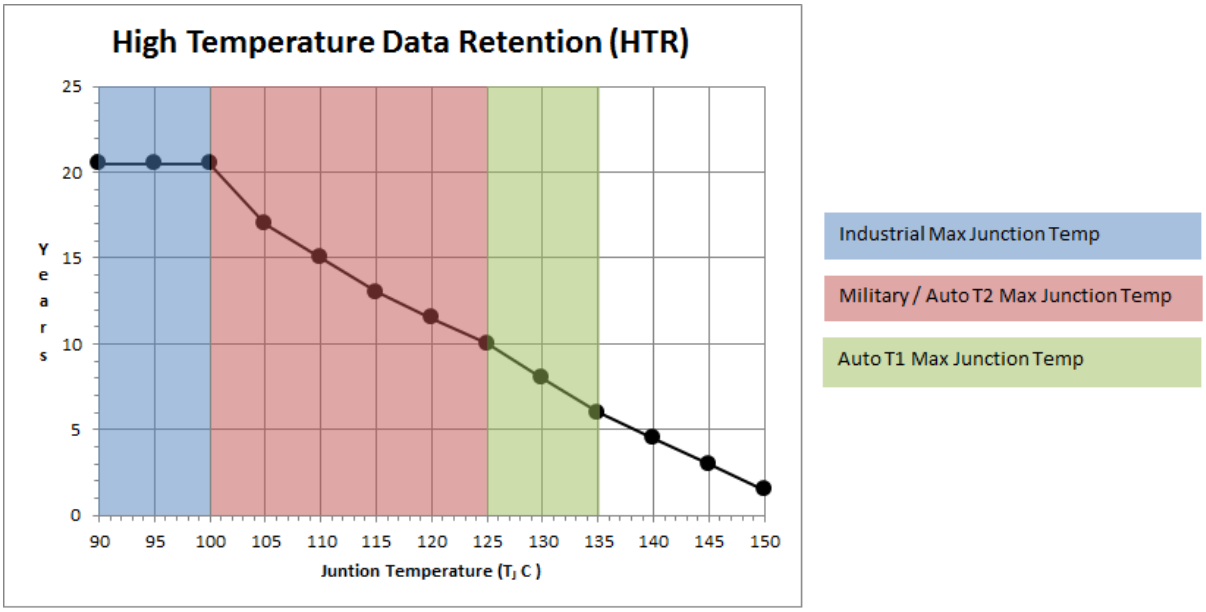

3.1.1 OVERSHOOT/UNDERSHOOT LIMITS

For AC signals, the input signal may undershoot during transitions to –1.0V for no longer than 10% of the period. The current during the transition must not exceed 100 mA.

For AC signals, the input signal may overshoot during transitions to V_{CCI} + 1.0V for no longer than 10% of the period.

© 2026 Microchip Technology Inc. and its subsidiaries

The current during the transition must not exceed 100 mA.

Note: The preceding specifications do not apply to the PCI standard. The IGLOO 2 and SmartFusion 2 PCI I/Os are compliant with the PCI standard including the PCI overshoot/undershoot specifications.

3.1.2 THERMAL CHARACTERISTICS

The temperature variable in the Microchip SoC Products Group Designer software refers to the junction temperature, not the ambient, case, or board temperatures. This is an important distinction because dynamic and static power consumption causes the chip's junction temperature to be higher than the ambient, case, or board temperatures.

EQ1 through EQ3 give the relationship between thermal resistance, temperature gradient, and power.

EQ1

$$\theta_{JA} = \frac{T_J - T_A}{P}$$

EQ2

$$\theta_{JB} = \frac{T_J - T_B}{P}$$

EQ3

$$\theta_{JC} = \frac{T_J - T_C}{P}$$

where:

θ_{JA}	=	Junction-to-air thermal resistance
θ_{JB}	=	Junction-to-board thermal resistance
θ_{JC}	=	Junction-to-case thermal resistance
T_J	=	Junction temperature
T_A	=	Ambient temperature
T_B	=	Board temperature (measured 1.0 mm away from the package edge)
T_C	=	Case temperature
P	=	Total power dissipated by the device

TABLE 3-7: PACKAGE THERMAL RESISTANCE OF SMARTFUSION 2 AND IGLOO 2 DEVICES

Device	Still Air	1.0 m/s	2.5 m/s	θ_{JB}	θ_{JC}	Unit
	θ_{JA}					
005						
FG484	19.36	15.81	14.63	9.74	5.27	°C/W
VF256	41.30	38.16	35.30	28.41	3.94	°C/W
VF400	20.19	16.94	15.41	8.86	4.95	°C/W
TQ144	42.80	36.80	34.50	37.20	10.80	°C/W
010						
FG484	18.22	14.83	13.62	8.83	4.92	°C/W
VF256	37.36	34.26	31.45	24.84	7.89	°C/W
VF400	19.40	15.75	14.22	8.11	4.22	°C/W
TQ144	38.60	32.60	30.30	31.80	8.60	°C/W
025						
FG484	17.03	13.66	12.45	7.66	4.18	°C/W
VF256	33.85	30.59	27.85	21.63	6.13	°C/W
VF400	18.36	14.89	13.36	7.12	3.41	°C/W

TABLE 3-7: PACKAGE THERMAL RESISTANCE OF SMARTFUSION 2 AND IGLOO 2 DEVICES

Device	Still Air	1.0 m/s	2.5 m/s	θ_{JB}	θ_{JC}	Unit
	θ_{JA}					
FCS325	29.17	24.87	23.12	14.44	2.31	°C/W
FCS158	36.12	32.05	29.66	19.02	5.4	°C/W
050						
FG484	15.29	12.19	10.99	6.27	3.24	°C/W
FG896	14.70	12.50	10.90	7.20	4.90	°C/W
VF400	17.53	14.17	12.63	6.32	2.81	°C/W
FCS325	27.38	23.18	21.41	12.47	1.59	°C/W
060						
FG484	15.40	12.06	10.85	6.14	3.15	°C/W
FG676	15.49	12.21	11.06	7.07	3.87	°C/W
VF400	17.45	14.01	12.47	6.22	2.69	°C/W
FCS325	27.03	22.91	21.25	12.33	1.54	°C/W
VF784	15.51	11.63	10.44	5.83	3.05	°C/W
090						
FG484	14.64	11.37	10.16	5.43	2.77	°C/W
FG676	14.52	11.19	10.37	6.17	3.24	°C/W
FCS325	26.63	22.26	20.13	14.24	2.50	°C/W
150						
FC1152	9.08	6.81	5.87	2.56	0.38	°C/W
FCS536	15.01	12.06	10.76	3.69	1.55	°C/W
FCV484	16.21	13.11	11.84	6.73	0.10	°C/W

3.1.2.1 Theta-JA

Junction-to-ambient thermal resistance (θ_{JA}) is determined under standard conditions specified by JEDEC (JESD-51), but it has little relevance in the actual performance of the product. It must be used with caution, but it is useful for comparing the thermal performance of one package with another.

The maximum power dissipation allowed is calculated using EQ4.

EQ4

$$\text{Maximum power allowed} = \frac{T_{J(MAX)} - T_{A(MAX)}}{\theta_{JA}}$$

The absolute maximum junction temperature is 100 °C. EQ5 shows a sample calculation of the absolute maximum power dissipation allowed for the M2GL050T-FG896 package at commercial temperature and in still air, where:

Table 1-1 •

θ_{JA} = 14.7 °C/W (taken from Table 3-7).

T_A = 85 °C

EQ5

$$\text{Maximum power allowed} = \frac{100\ °C - 85\ °C}{14.7\ °C/W} = 1.088\,W$$

The power consumption of a device can be calculated using the Microchip SoC Products Group power calculator. The device's power consumption must be lower than the calculated maximum power dissipation by the package.

If the power consumption is higher than the device's maximum allowable power dissipation, a heat sink may be attached to the top of the case, or the airflow inside the system must be increased.

© 2026 Microchip Technology Inc. and its subsidiaries

3.1.2.2 Theta-JB

Junction-to-board thermal resistance (θ_{JB}) measures the ability of the package to dissipate heat from the surface of the chip to the PCB. As defined by the JEDEC (JESD-51) standard, the thermal resistance from the junction to the board uses an isothermal ring cold plate zone concept. The ring cold plate is simply a means to generate an isothermal boundary condition at the perimeter. The cold plate is mounted on a JEDEC standard board with a minimum distance of 5.0 mm away from the package edge.

3.1.2.3 Theta-JC

Junction-to-case thermal resistance (θ_{JC}) measures the ability of a device to dissipate heat from the surface of the chip to the top or bottom surface of the package. It is applicable to packages used with external heat sinks. Constant temperature is applied to the surface, which acts as a boundary condition.

This only applies to situations where all or nearly all the heat is dissipated through the surface in consideration.

3.1.3 ESD PERFORMANCE

To get information about ESD, see Microchip FPGA Reliability Report. To get a copy of Microchip FPGA Reliability Report, contact Tech Support: https://microchipsupport.force.com/s/.

3.2 Power Consumption

The following sections describe the power consumptions of the devices.

3.2.1 QUIESCENT SUPPLY CURRENT

TABLE 3-8: QUIESCENT SUPPLY CURRENT CHARACTERISTICS

Power Supplies/Blocks	Modes and Configurations	
	Non-Flash*Freeze	Flash*Freeze
FPGA Core	On	Off
V_{DD}/SERDES_[01]_VDD[1]	On	On
V_{PP}/V_{PPNVM}	On	On
HPMS_MDDR_PLL_VDDA/FDDR_PLL_VDDA/ CCC_XX[01]_PLL_VDDA/PLL0_PLL1_HPMS_MDDR_VDDA	0V	0V
SERDES_[01]_PLL_VDDA[2]	0V	0V
SERDES_[01]_L[0123]_VDDAPLL/VDD_2V5[2]	On	On
SERDES_[01]_L[0123]_VDDAIIO[2]	On	On
V_{DDIx}[3, 4]	On	On
V_{REFx}	On	On
MSSDDR CLK	32 kHz	32 kHz
RAM	On	Sleep state
System controller	50 MHz	50 MHz
50 MHz oscillator (enable/disable)	Enable	Disable
1 MHz oscillator (enable/disable)	Disable	Enable
Crystal oscillator (enable/disable)	Disable	Disable

1. SERDES_[01]_VDD Power Supply is shorted to V_{DD}.
2. SerDes and DDR blocks to be unused.
3. V_{DDIx} has been set to ON for test conditions as described. Banks on the east side should always be powered with the appropriate V_{DDI} bank supplies. For details on bank power supplies, see “Recommendation for Unused Bank Supplies” table in the *Board and Layout Design Guidelines for SmartFusion®2 SoC and IGLOO®2 FPGAs*.
4. No Differential (that is, LVDS) I/Os or ODT attributes must be used.

TABLE 3-9: SMARTFUSION 2 AND IGLOO 2 QUIESCENT SUPPLY CURRENT (V_{DD} = 1.2V)—TYPICAL PROCESS

Symbol	Modes	005	010	025	050	060	090	150	Unit	Conditions
IDC1	Non-Flash*Freeze	6.2	6.9	8.9	13.1	15.3	15.4	27.5	mA	Typical (T_J = 25 °C)
		24.0	28.4	40.6	67.8	80.6	81.4	144.7	mA	Commercial (T_J = 85 °C)
		35.2	41.9	60.5	102.1	121.4	122.6	219.1	mA	Industrial (T_J = 100 °C)
IDC2	Flash*Freeze	1.4	2.6	3.7	5.1	5.0	5.1	8.9	mA	Typical (T_J = 25 °C)
		12.0	20.0	26.6	35.3	35.4	35.7	57.8	mA	Commercial (T_J = 85 °C)
		18.5	30.8	41.0	54.5	54.5	55.0	89.0	mA	Industrial (T_J = 100 °C)

TABLE 3-10: SMARTFUSION 2 AND IGLOO 2 QUIESCENT SUPPLY CURRENT (V_{DD} = 1.26V)—WORST-CASE PROCESS

Symbol	Modes	005	010	025	050	060	090	150	Unit	Conditions
IDC1	Non-Flash*Freeze	43.8	57.0	84.6	132.3	161.4	163.0	242.5	mA	Commercial (T_J= 85 °C)
		65.3	85.7	127.8	200.9	245.4	247.8	369.0	mA	Industrial (T_J = 100 °C)
IDC2	Flash*Freeze	29.1	45.6	51.7	62.7	69.3	70.0	84.8	mA	Commercial (T_J = 85 °C)
		44.9	70.3	79.7	96.5	106.8	107.8	130.6	mA	Industrial (T_J = 100 °C)

3.2.2 PROGRAMMING CURRENTS

The following tables list programming, verify, and Inrush currents for SmartFusion 2 SoC and IGLOO 2 FPGA devices.

TABLE 3-11: CURRENTS DURING PROGRAM CYCLE, 0 °C ≤ T_J ≤ 85 °C—TYPICAL PROCESS

Power Supplies	Voltage (V)	005	010	025	050	060	090	150[1]	Unit
V_{DD}	1.26	46	53	55	58	30	42	52	mA
V_{PP}	3.46	8	11	6	10	9	12	12	mA
V_{PPNVM}	3.46	1	2	2	3	3	3		mA
V_{DDI}	2.62	31	16	17	1	12	12	81	mA
	3.46	62	31	36	1	12	17	84	mA
Number of banks	—	7	8	8	10	10	9	19	

1 V_{PP} and V_{PPNVM} are internally shorted.

TABLE 3-12: CURRENTS DURING VERIFY CYCLE, 0 °C ≤ T_J ≤ 85 °C—TYPICAL PROCESS

Power Supplies	Voltage (V)	005	010	025	050	060	090	150[1]	Unit
V_{DD}	1.26	44	53	55	58	33	41	51	mA
V_{PP}	3.46	6	5	3	15	8	11	12	mA
V_{PPNVM}	3.46	1	0	0	1	1	1		mA

© 2026 Microchip Technology Inc. and its subsidiaries

TABLE 3-12: CURRENTS DURING VERIFY CYCLE, 0 °C ≤ T_J ≤ 85 °C—TYPICAL PROCESS

V_{DDI}	2.62	31	16	17	1	12	11	81	mA
	3.46	61	32	36	1	12	17	84	mA
Number of banks	—	7	8	8	10	10	9	19	—

1 V_{PP} and V_{PPNVM} are internally shorted.

TABLE 3-13: INRUSH CURRENTS AT POWER UP, –40 °C ≤ T_J ≤ 100 °C—TYPICAL PROCESS

Power Supplies	Voltage (V)	005	010	025	050	060	090	150	Unit
V_{DD}	1.26	25	32	38	48	45	77	109	mA
V_{PP}	3.46	33	49	36	180	13	36	51	mA
V_{DDI}	2.62	134	141	161	187	93	272	388	mA
Number of banks	—	7	8	8	10	10	9	19	—

3.3 Average Fabric Temperature and Voltage Derating Factors

The following table lists the average temperature and voltage derating factors for fabric timing delays normalized to T_J = 85 °C, in worst-case V_{DD} = 1.14V.

TABLE 3-14: AVERAGE JUNCTION TEMPERATURE AND VOLTAGE DERATING FACTORS FOR FABRIC TIMING DELAYS

Array Voltage V_{DD} (V)	–40 °C	0 °C	25 °C	70 °C	85 °C	100 °C
1.14	0.83	0.89	0.92	0.98	1.00	1.02
1.2	0.75	0.80	0.83	0.89	0.91	0.93
1.26	0.69	0.73	0.76	0.81	0.83	0.85

3.4 Timing Model

This section describes timing model and timing parameters.

FIGURE 3-2: TIMING MODEL

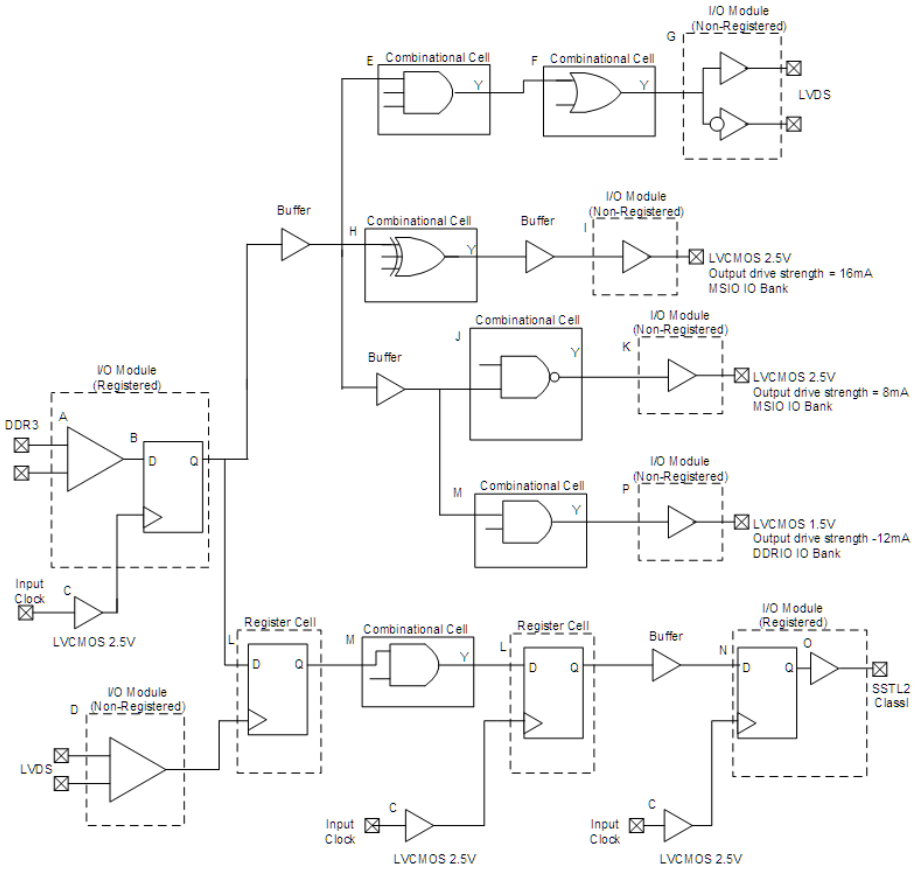

The following table lists the timing model parameters in worst commercial-case conditions when T_J = 85 °C, V_{DD} = 1.14V.

TABLE 3-15: TIMING MODEL PARAMETERS

Index	Symbol	Description	–1	Unit	For More Information
A	T_{PY}	Propagation delay of DDR3 receiver	1.605	ns	See Table 3-135
B	T_{ICLKQ}	Clock-to-Q of the input data register	0.16	ns	See Table 3-219
	T_{ISUD}	Setup time of the input data register	0.357	ns	See Table 3-219
C	T_{RCKH}	Input high delay for global clock	1.53	ns	See Table 3-225
	T_{RCKL}	Input low delay for global clock	0.897	ns	See Table 3-225
D	T_{PY}	Input propagation delay of LVDS receiver	2.774	ns	See Table 3-165
E	T_{DP}	Propagation delay of a three-input AND gate	0.198	ns	See Table 3-221
F	T_{DP}	Propagation delay of an OR gate	0.179	ns	See Table 3-221
G	T_{DP}	Propagation delay of an LVDS trans-mitter	2.136	ns	See Table 3-167
H	T_{DP}	Propagation delay of a three-input XOR Gate	0.241	ns	See Table 3-221

© 2026 Microchip Technology Inc. and its subsidiaries

TABLE 3-15: TIMING MODEL PARAMETERS (CONTINUED)

Index	Symbol	Description	–1	Unit	For More Information
I	T_{DP}	Propagation delay of LVCMOS 2.5V transmitter, drive strength of 16 mA on the MSIO bank	2.412	ns	See Table 3-44
J	T_{DP}	Propagation delay of a two-input NAND gate	0.179	ns	See Table 3-221
K	T_{DP}	Propagation delay of LVCMOS 2.5V transmitter, drive strength of 8 mA on the MSIO bank	2.309	ns	See Table 3-44
L	T_{CLKQ}	Clock-to-Q of the data register	0.108	ns	See Table 3-222
	T_{SUD}	Setup time of the data register	0.254	ns	See Table 3-222
M	T_{DP}	Propagation delay of a two-input AND gate	0.179	ns	See Table 3-221
N	T_{OCLKQ}	Clock-to-Q of the output data register	0.263	ns	See Table 3-218
	T_{OSUD}	Setup time of the output data register	0.19	ns	See Table 3-218
O	T_{DP}	Propagation delay of SSTL2, Class I transmitter on the MSIO bank	2.055	ns	See Table 3-112
P	T_{DP}	Propagation delay of LVCMOS 1.5V transmitter, drive strength of 12 mA, fast slew on the DDRIO bank	3.316	ns	See Table 3-68

3.5 User I/O Characteristics

There are three types of I/Os supported in the IGLOO 2 FPGA and SmartFusion 2 SoC FPGA families: MSIO, MSIOD, and DDRIO I/O banks. The I/O standards supported by the different I/O banks is described in the I/Os section of the *UG0445: IGLOO2 FPGA and SmartFusion2 SoC FPGA Fabric User Guide*.

3.5.1 INPUT BUFFER AND AC LOADING

The following figure shows the input buffer and AC loading.

FIGURE 3-3: INPUT BUFFER AC LOADING

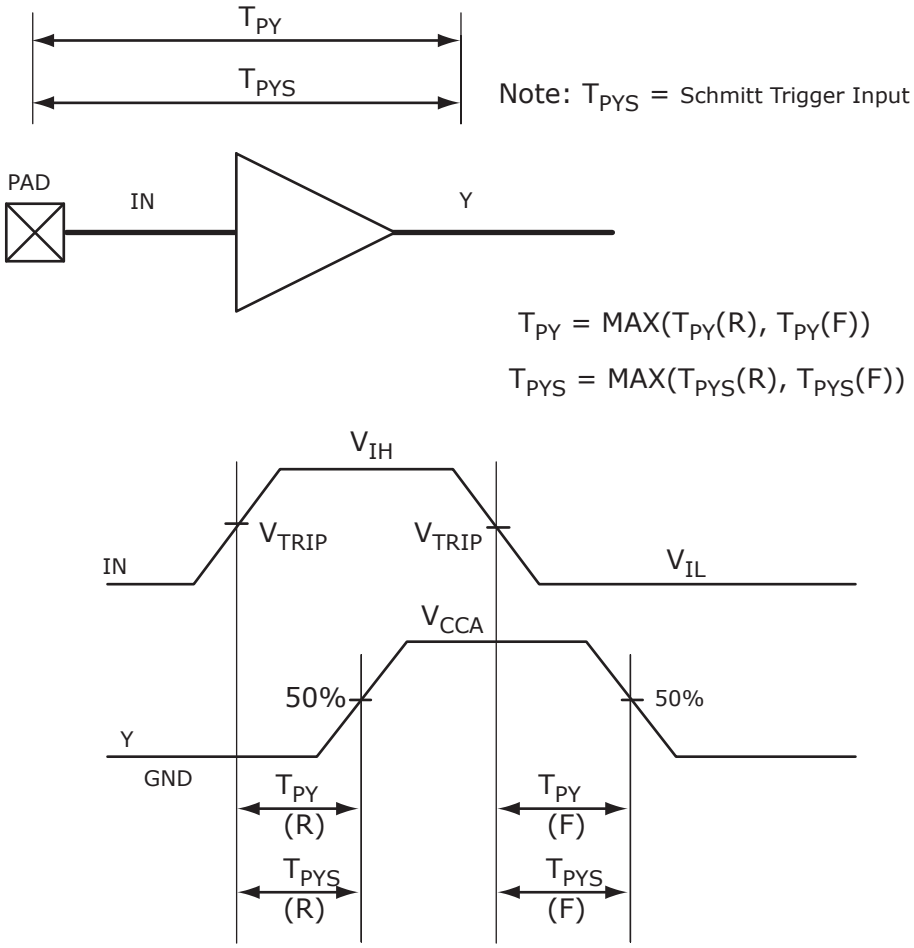

© 2026 Microchip Technology Inc. and its subsidiaries

3.5.2 OUTPUT BUFFER AND AC LOADING

The following figure shows the output buffer and AC loading.

FIGURE 3-4: OUTPUT BUFFER AC LOADING

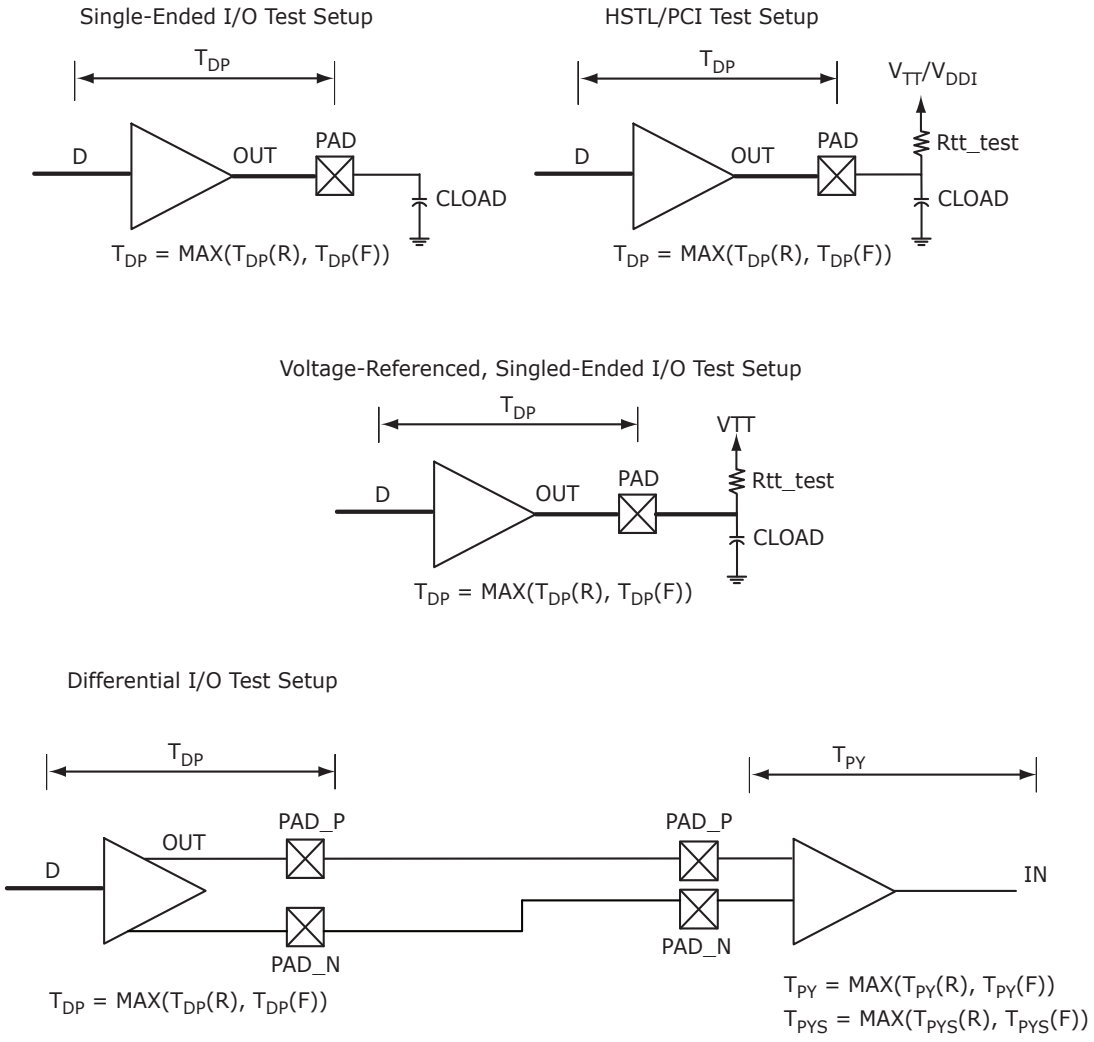

3.5.3 TRISTATE BUFFER AND AC LOADING

The tristate path for enable path loadings is described in the respective specifications. The following figure shows the methodology of characterization illustrated by the enable path test point.

FIGURE 3-5: TRISTATE BUFFER FOR ENABLE PATH TEST POINT

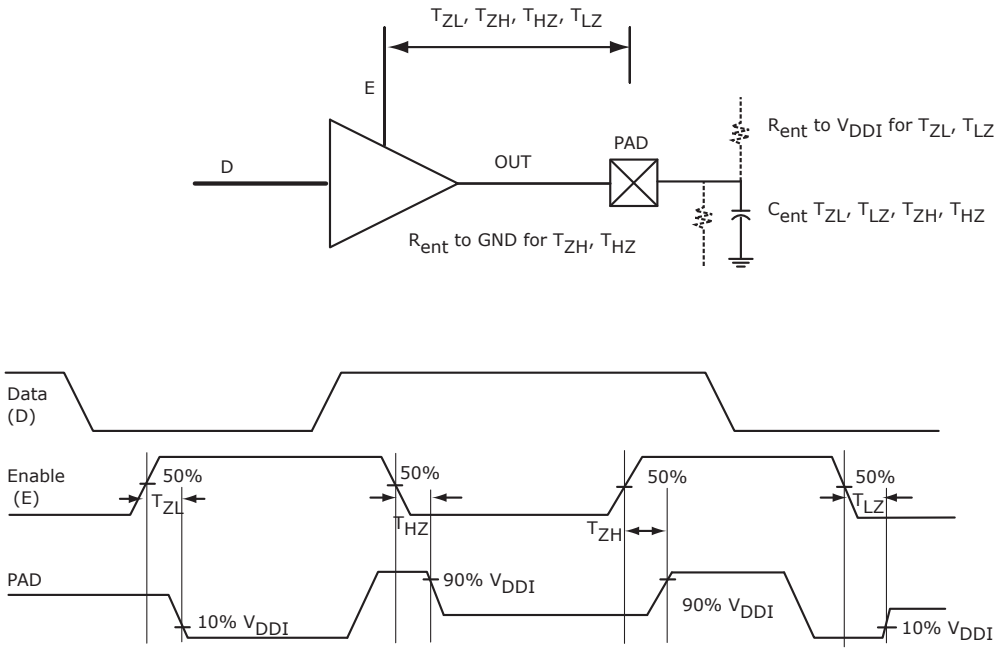

3.5.4 I/O SPEEDS

This section describes the maximum data rate summary of I/O in worst-case industrial conditions. See the individual I/O standards for operating conditions.

TABLE 3-16: MAXIMUM DATA RATE SUMMARY TABLE FOR SINGLE-ENDED I/O IN WORST-CASE INDUSTRIAL CONDITIONS

I/O	MSIO	MSIOD	DDRIO	Unit
PCI 3.3V	630	—	—	Mbps
LVTTL 3.3V	600	—	—	Mbps
LVCMOS 3.3V	600	—	—	Mbps
LVCMOS 2.5V	410	420	400	Mbps
LVCMOS 1.8V	295	400	400	Mbps
LVCMOS 1.5V	160	220	235	Mbps
LVCMOS 1.2V	120	160	200	Mbps
LPDDR-LVCMOS 1.8V mode	—	—	400	Mbps

TABLE 3-17: MAXIMUM DATA RATE SUMMARY TABLE FOR VOLTAGE-REFERENCED I/O IN WORST-CASE INDUSTRIAL CONDITIONS

I/O	MSIO	MSIOD	DDRIO	Unit
LPDDR	—	—	400	Mbps
HSTL1.5V	—	—	400	Mbps
SSTL 2.5V	510	700	400	Mbps
SSTL 1.8V	—	—	667	Mbps
SSTL 1.5V	—	—	667	Mbps

© 2026 Microchip Technology Inc. and its subsidiaries

TABLE 3-18: MAXIMUM DATA RATE SUMMARY TABLE FOR DIFFERENTIAL I/O IN WORST-CASE INDUSTRIAL CONDITIONS

I/O	MSIO	MSIOD	Unit
LVPECL (input only)	900	—	Mbps
LVDS 3.3V	535	—	Mbps
LVDS 2.5V	535	700	Mbps
RSDS	520	700	Mbps
BLVDS	500	—	Mbps
MLVDS	500	—	Mbps
Mini-LVDS	520	700	Mbps

TABLE 3-19: MAXIMUM FREQUENCY SUMMARY TABLE FOR SINGLE-ENDED I/O IN WORST-CASE INDUSTRIAL CONDITIONS

I/O	MSIO	MSIOD	DDRIO	Unit
PCI 3.3V	315	—	—	MHz
LVTTL 3.3V	300	—	—	MHz
LVCMOS 3.3V	300	—	—	MHz
LVCMOS 2.5V	205	210	200	MHz
LVCMOS 1.8V	147.5	200	200	MHz
LVCMOS 1.5V	80	110	118	MHz
LVCMOS 1.2V	60	80	100	MHz
LPDDR– LVCMOS 1.8V mode	—	—	200	MHz

TABLE 3-20: MAXIMUM FREQUENCY SUMMARY TABLE FOR VOLTAGE-REFERENCED I/O IN WORST-CASE INDUSTRIAL CONDITIONS

I/O	MSIO	MSIOD	DDRIO	Unit
LPDDR	—	—	200	MHz
HSTL1.5V	—	—	200	MHz
SSTL 2.5V	255	350	200	MHz
SSTL 1.8V	—	—	334	MHz
SSTL 1.5V	—	—	334	MHz

TABLE 3-21: MAXIMUM FREQUENCY SUMMARY TABLE FOR DIFFERENTIAL I/O IN WORST-CASE INDUSTRIAL CONDITIONS

I/O	MSIO	MSIOD	Unit
LVPECL (input only)	450	—	MHz
LVDS 3.3V	267.5	—	MHz
LVDS 2.5V	267.5	350	MHz
RSDS	260	350	MHz
BLVDS	250	—	MHz
MLVDS	250	—	MHz
Mini-LVDS	260	350	MHz

3.5.5 DETAILED I/O CHARACTERISTICS

TABLE 3-22: INPUT CAPACITANCE, LEAKAGE CURRENT, AND RAMP TIME

Symbol	Description	Maximum	Unit	Conditions
C_{IN}	Input capacitance	10	pF	—
I_{IL} (dc)	Input current low (Applicable to HSTL/SSTL inputs only)	400	µA	V_{DDI} = 2.5V
		500	µA	V_{DDI} = 1.8V
		600	µA	V_{DDI} = 1.5V[1]
	Input current low (Applicable to all other digital inputs)	10	µA	
I_{IH} (dc)	Input current high (Applicable to HSTL/SSTL inputs only)	400	µA	V_{DDI} = 2.5V
		500	µA	V_{DDI} = 1.8V
		600	µA	V_{DDI} = 1.5V[1]
	Input current high (Applicable to all other digital inputs)	10	µA	—
T_{RAMPIN}[2, 3]	Input ramp time (Applicable to all digital inputs)	50	ns	—

1 Applicable when I/O pair is programmed with an HSTL/SSTL I/O type on IOP and an un-terminated I/O type (for example, LVCMOS) on ION pad.

2. Input signal must be monotonic.

3. Device inputs on MSIO, MSIOD, and DEVRST pins verified to function up to 1 ms ramp rate with no reliability issues. Timing is only characterized to 50 ns.

The following table lists the minimum and maximum I/O weak pull-up/pull-down resistance values of DDRIO I/O bank at V_{OH}/V_{OL} level.

TABLE 3-23: I/O WEAK PULL-UP/PULL-DOWN RESISTANCES FOR DDRIO I/O BANK

V_{DDI} Domain	R (WEAK PULL-UP) at V_{OH} (Ω)		R (WEAK PULL-DOWN) at V_{OL} (Ω)	
	Min.	Max.	Min.	Max.
2.5 V[1, 2]	10K	17.8K	9.98K	18K
1.8 V[1, 2]	10.3K	19.1K	10.3K	19.5K
1.5 V[1, 2]	10.6K	20.2K	10.6K	21.1K
1.2 V[1, 2]	11.1K	22.7K	11.2K	24.6K

1 R(WEAK PULL-DOWN) = (VOLspec)/I(WEAK PULL-DOWN MAX).

2 R(WEAK PULL-UP) = (VDDImax – VOHspec)/I(WEAK PULL-UP MIN).

The following table lists the minimum and maximum I/O weak pull-up/pull-down resistance values of MSIO I/O bank at V_{OH}/V_{OL} level.

TABLE 3-24: I/O WEAK PULL-UP/PULL-DOWN RESISTANCES FOR MSIO I/O BANK

V_{DDI} Domain	R (WEAK PULL-UP) at V_{OH} (Ω)		R (WEAK PULL-DOWN) at V_{OL} (Ω)	
	Min.	Max.	Min.	Max.
3.3 V	9.9K	17.1K	9.98K	17.5K
2.5 V[1, 2]	10K	17.6K	10.1K	18.4K
1.8 V[1, 2]	10.4K	19.1K	10.4K	20.4K
1.5 V[1, 2]	10.7K	20.4K	10.8K	22.2K
1.2 V[1, 2]	11.3K	23.2K	11.5K	26.7K

1 R(WEAK PULL-DOWN) = (VOLspec)/I(WEAK PULL-DOWN MAX).

© 2026 Microchip Technology Inc. and its subsidiaries

2 R(WEAK PULL-UP) = (VDDImax – VOHspec)/I(WEAK PULL-UP MIN).

The following table lists the minimum and maximum I/O weak pull-up/pull-down resistance values of MSIOD I/O bank at V_{OH}/V_{OL} level.

TABLE 3-25: I/O WEAK PULL-UP/PULL-DOWN RESISTANCES FOR MSIOD I/O BANK

V_{DDI} Domain	R (WEAK PULL-UP) at V_{OH} (Ω)		R (WEAK PULL-DOWN) at V_{OL} (Ω)	
	Min.	Max.	Min.	Max.
2.5 V[1, 2]	9.6K	16.6K	9.5K	16.4K
1.8 V[1, 2]	9.7K	17.3K	9.7K	17.1K
1.5 V[1, 2]	9.9K	18K	9.8K	17.6K
1.2 V[1, 2]	10.3K	19.6K	10K	19.1K

1 R(WEAK PULL-DOWN) = (VOLspec)/I(WEAK PULL-DOWN MAX).
2 R(WEAK PULL-UP) = (VDDImax – VOHspec)/I(WEAK PULL-UP MIN).

The following table lists the hysteresis voltage value for schmitt trigger mode input buffers.

TABLE 3-26: SCHMITT TRIGGER INPUT HYSTERESIS

Input Buffer Configuration	Hysteresis Value (Typical, Unless Otherwise Noted)
3.3V LVTTL/LVCMOS/ PCI/PCI-X	0.05 × V_{DDI} (worst-case)
2.5V LVCMOS	0.05 × V_{DDI} (worst-case)
1.8V LVCMOS	0.1 × V_{DDI} (worst-case)
1.5V LVCMOS	60 mV
1.2V LVCMOS	20 mV

3.5.6 SINGLE-ENDED I/O STANDARDS

3.5.6.1 Low Voltage Complementary Metal Oxide Semiconductor (LVCMOS)

LVCMOS is a widely used switching standard implemented in CMOS transistors. This standard is defined by JEDEC (JESD 8-5). The LVCMOS standards supported in IGLOO 2 FPGAs and SmartFusion 2 SoC FPGAs are: LVCMOS12, LVCMOS15, LVCMOS18, LVCMOS25, and LVCMOS33.

3.5.6.2 3.3V LVCMOS/LVTTL

LVCMOS 3.3V or Low-Voltage Transistor-Transistor Logic (LVTTL) is a general standard for 3.3V applications.

Minimum and Maximum DC/AC Input and Output Levels Specification

TABLE 3-27: LVTTL/LVCMOS 3.3V DC RECOMMENDED DC OPERATING CONDITIONS (APPLICABLE TO MSIO I/O BANK ONLY)

Parameter	Symbol	Min.	Typ.	Max.	Unit
Supply voltage	V_{DDI}	3.15	3.3	3.45	V

TABLE 3-28: LVTTL/LVCMOS 3.3V INPUT VOLTAGE SPECIFICATION (APPLICABLE TO MSIO I/O BANK ONLY)

Parameter	Symbol	Min.	Max.	Unit
DC input logic high	V_{IH} (DC)	2.0	3.45	V
DC input logic low	V_{IL} (DC)	–0.3	0.8	V
Input current high[1]	I_{IH} (DC)	—	—	—
Input current low[1]	I_{IL} (DC)	—	—	—

1 See Table 3-22.

TABLE 3-29: LVCMOS 3.3V DC OUTPUT VOLTAGE SPECIFICATION (APPLICABLE TO MSIO I/O BANK ONLY)

Parameter	Symbol	Min.	Max.	Unit
DC output logic high[1]	V_{OH}	V_{DDI}–0.4	—	V
DC output logic low[1]	V_{OL}	—	0.4	V

1 The V_{OH}/V_{OL} test points selected ensure compliance with LVCMOS 3.3V JESD8-B requirements.

TABLE 3-30: LVTTL 3.3V DC OUTPUT VOLTAGE SPECIFICATION (APPLICABLE TO MSIO I/O BANK ONLY)

Parameter	Symbol	Min.	Max.	Unit
DC output logic high	V_{OH}	2.4	—	V
DC output logic low	V_{OL}	—	0.4	V

TABLE 3-31: LVTTL/LVCMOS 3.3V AC MAXIMUM SWITCHING SPEED (APPLICABLE TO MSIO I/O BANK ONLY)

Parameter	Symbol	Max.	Unit	Conditions
Maximum data rate (for MSIO I/O bank)	D_{MAX}	600	Mbps	AC loading: 17 pF load, maximum drive/slew

TABLE 3-32: LVTTL/LVCMOS 3.3V AC TEST PARAMETER SPECIFICATIONS (APPLICABLE TO MSIO I/O BANK ONLY)

Parameter	Symbol	Typ.	Unit
Measuring/trip point for data path	V_{TRIP}	1.4	V
Resistance for enable path (T_{ZH}, T_{ZL}, T_{HZ}, T_{LZ})	R_{ENT}	2K	Ω
Capacitive loading for enable path (T_{ZH}, T_{ZL}, T_{HZ}, T_{LZ})	C_{ENT}	5	pF
Capacitive loading for data path (T_{DP})	C_{LOAD}	5	pF

TABLE 3-33: LVTTL/LVCMOS 3.3V TRANSMITTER DRIVE STRENGTH SPECIFICATIONS FOR MSIO I/O BANK

Output Drive Selection	V_{OH} (V)	V_{OL} (V)	IOH (at V_{OH}) mA	IOL (at V_{OL}) mA
2 mA	V_{DDI}–0.4	0.4	2	2
4 mA	V_{DDI}–0.4	0.4	4	4
8 mA	V_{DDI}–0.4	0.4	8	8
12 mA	V_{DDI}–0.4	0.4	12	12
16 mA	V_{DDI}–0.4	0.4	16	16
20 mA	V_{DDI}–0.4	0.4	20	20

Note: For a detailed I/V curve, use the corresponding IBIS models:

- For IGLOO 2: https://www.microchip.com/en-us/products/fpgas-and-plds/fpgas/igloo-2-fpgas#Documentation.
- For SmartFusion 2: https://www.microchip.com/en-us/products/fpgas-and-plds/system-on-chip-fpgas/smartfusion-2-fpgas#Documentation.

© 2026 Microchip Technology Inc. and its subsidiaries

AC Switching Characteristics

Worst commercial-case conditions: T_J = 85 °C, V_{DD} = 1.14V, and V_{DDI} = 3.0V.

TABLE 3-34: LVTTL/LVCMOS 3.3V RECEIVER CHARACTERISTICS FOR MSIO I/O BANK (INPUT BUFFERS)

On-Die Termination (ODT)	T_{PY}		T_{PYS}		Unit
	–1	–Std	–1	–Std	
None	2.262	2.663	2.289	2.695	ns

TABLE 3-35: LVTTL/LVCMOS 3.3V TRANSMITTER CHARACTERISTICS FOR MSIO I/O BANK (OUTPUT AND TRISTATE BUFFERS)

Output Drive Selection	Slew Control	T_{DP}		T_{ZL}		T_{ZH}		T_{HZ}[1]		T_{LZ}[1]		Unit
		–1	–Std	–1	–Std	–1	–Std	–1	–Std	–1	–Std	
2 mA	Slow	3.192	3.755	3.47	4.083	2.969	3.494	1.856	2.183	3.337	3.926	ns
4 mA	Slow	2.331	2.742	2.673	3.145	2.526	2.973	3.034	3.569	4.451	5.236	ns
8 mA	Slow	2.135	2.511	2.33	2.741	2.297	2.703	4.532	5.331	4.825	5.676	ns
12 mA	Slow	2.052	2.414	2.107	2.479	2.162	2.544	5.75	6.764	5.445	6.406	ns
16 mA	Slow	2.062	2.425	2.072	2.438	2.145	2.525	5.993	7.05	5.625	6.618	ns
20 mA	Slow	2.148	2.527	1.999	2.353	2.088	2.458	6.262	7.367	5.876	6.913	ns

1 Delay increases with drive strength are inherent to built-in slew control circuitry for Simultaneous Switching Output (SSO) management.

3.5.7 2.5V LVCMOS

LVCMOS 2.5V is a general standard for 2.5V applications and is supported in IGLOO 2 FPGA and SmartFusion 2 SoC FPGAs that follow the JEDEC specification JESD8-5A.

Minimum and Maximum DC/AC Input and Output Levels Specification

TABLE 3-36: LVCMOS 2.5 V DC RECOMMENDED DC OPERATING CONDITIONS

Parameter	Symbol	Min.	Typ.	Max.	Unit
Supply voltage	V_{DDI}	2.375	2.5	2.625	V

TABLE 3-37: LVCMOS 2.5 V DC INPUT VOLTAGE SPECIFICATION

Parameter	Symbol	Min.	Max.	Unit
DC input logic high (for MSIOD and DDRIO I/O banks)	V_{IH} (DC)	1.7	2.625	V
DC input logic high (for MSIO I/O bank)	V_{IH} (DC)	1.7	3.45	V
DC input logic low	V_{IL} (DC)	–0.3	0.7	V
Input current high[1]	I_{IH} (DC)	—	—	—
Input current low[1]	I_{IL} (DC)	—	—	—

1 See Table 3-22.

TABLE 3-38: LVCMOS 2.5V DC OUTPUT VOLTAGE SPECIFICATION

Parameter	Symbol	Min.	Max.	Unit
DC output logic high	V_{OH}[1]	V_{DDI} – 0.4	—	V
DC output logic low	V_{OL}[1]	—	0.4	V

1 The VOH/VOL test points selected ensure compliance with LVCMOS 2.5 V JEDEC8-5A requirements.

TABLE 3-39: LVCMOS 2.5V AC MINIMUM AND MAXIMUM SWITCHING SPEED

Parameter	Symbol	Max.	Unit	Conditions
Maximum data rate (for DDRIO I/O bank)	D_{MAX}	400	Mbps	AC loading: 17 pF load, maximum drive/slew
Maximum data rate (for MSIO I/O bank)	D_{MAX}	410	Mbps	AC loading: 17 pF load, maximum drive/slew
Maximum data rate (for MSIOD I/O bank)	D_{MAX}	420	Mbps	AC loading: 17 pF load, maximum drive/slew

TABLE 3-40: LVCMOS 2.5V AC CALIBRATED IMPEDANCE OPTION

Parameter	Symbol	Typ.	Unit
Supported output driver calibrated impedance (for DDRIO I/O bank)	Rodt_cal	75, 60, 50, 33, 25, 20	Ω

TABLE 3-41: LVCMOS 2.5V AC TEST PARAMETER SPECIFICATIONS

Parameter	Symbol	Typ.	Unit
Measuring/trip point for data path	V_{TRIP}	1.2	V
Resistance for enable path (T_{ZH}, T_{ZL}, T_{HZ}, T_{LZ})	R_{ENT}	2K	Ωσ
Capacitive loading for enable path (T_{ZH}, T_{ZL}, T_{HZ}, T_{LZ})	C_{ENT}	5	pF
Capacitive loading for data path (T_{DP})	C_{LOAD}	5	pF

TABLE 3-42: LVCMOS 2.5V TRANSMITTER DRIVE STRENGTH SPECIFICATIONS

Output Drive Selection			VOH (V)	VOL (V)	IOH (at VOH) mA	IOL (at VOL) mA
MSIO I/O Bank	MSIOD I/O Bank	DDRIO I/O Bank (With Software Default Fixed Code)	Min.	Max.		
2 mA	2 mA	2 mA	V_{DDI}–0.4	0.4	2	2
4 mA	4 mA	4 mA	V_{DDI}–0.4	0.4	4	4
6 mA	6 mA	6 mA	V_{DDI}–0.4	0.4	6	6
8 mA	8 mA	8 mA	V_{DDI}–0.4	0.4	8	8
12 mA	12 mA	12 mA	V_{DDI}–0.4	0.4	12	12
16 mA	—	16 mA	V_{DDI}–0.4	0.4	16	16

Note: For board design considerations, output slew rates extraction, detailed output buffer resistances, and I/V curve, use the corresponding IBIS models located at:

- For IGLOO 2: https://www.microchip.com/en-us/products/fpgas-and-plds/fpgas/igloo-2-fpgas#Documentation
- For SmartFusion 2: https://www.microchip.com/en-us/products/fpgas-and-plds/system-on-chip-fpgas/smartfusion-2-fpgas#Documentation

AC Switching Characteristics

Worst commercial-case conditions: T_J = 85 °C, V_{DD} = 1.14V, and V_{DDI} = 2.375V.

TABLE 3-43: LVCMOS 2.5V RECEIVER CHARACTERISTICS (INPUT BUFFERS)

	On-Die Termination (ODT)	T_{PY}		T_{PYS}		Unit
		–1	–Std	–1	–Std	

© 2026 Microchip Technology Inc. and its subsidiaries

TABLE 3-43: LVCMOS 2.5V RECEIVER CHARACTERISTICS (INPUT BUFFERS)

LVCMOS 2.5 V (for DDRIO I/O bank)	None	1.823	2.145	1.932	2.274	ns
LVCMOS 2.5 V (for MSIO I/O bank)	None	2.486	2.925	2.495	2.935	ns
LVCMOS 2.5 V (for MSIOD I/O bank)	None	2.29	2.694	2.305	2.712	ns

TABLE 3-44: LVCMOS 2.5V TRANSMITTER CHARACTERISTICS FOR DDRIO BANK (OUTPUT AND TRISTATE BUFFERS)

Output Drive Selection	Slew Control	T_{DP}		T_{ZL}		T_{ZH}		T_{HZ}[1]		T_{LZ}[1]		Unit
		–1	–Std	–1	–Std	–1	–Std	–1	–Std	–1	–Std	
2 mA	Slow	3.657	4.302	3.393	3.991	3.675	4.323	3.894	4.582	3.552	4.18	ns
	Medium	3.374	3.97	3.139	3.693	3.396	3.995	3.635	4.277	3.253	3.828	ns
	Medium fast	3.239	3.811	3.036	3.572	3.261	3.836	3.519	4.141	3.128	3.681	ns
	Fast	3.224	3.793	3.029	3.563	3.246	3.818	3.512	4.132	3.119	3.67	ns
4 mA	Slow	3.095	3.641	2.705	3.182	3.088	3.633	4.738	5.575	4.348	5.116	ns
	Medium	2.825	3.324	2.488	2.927	2.823	3.321	4.492	5.285	4.063	4.781	ns
	Medium fast	2.701	3.178	2.384	2.804	2.698	3.173	4.364	5.135	3.945	4.642	ns
	Fast	2.69	3.165	2.377	2.796	2.687	3.161	4.359	5.129	3.94	4.636	ns
6 mA	Slow	2.919	3.434	2.491	2.93	2.902	3.414	5.085	5.983	4.674	5.5	ns
	Medium	2.65	3.118	2.279	2.681	2.642	3.108	4.845	5.701	4.375	5.148	ns
	Medium fast	2.529	2.975	2.176	2.56	2.521	2.965	4.724	5.558	4.259	5.011	ns
	Fast	2.516	2.96	2.168	2.551	2.508	2.95	4.717	5.55	4.251	5.002	ns
8 mA	Slow	2.863	3.368	2.427	2.855	2.844	3.346	5.196	6.114	4.769	5.612	ns
	Medium	2.599	3.058	2.217	2.608	2.59	3.047	4.952	5.827	4.471	5.261	ns
	Medium fast	2.483	2.921	2.114	2.487	2.473	2.91	4.832	5.685	4.364	5.134	ns
	Fast	2.467	2.902	2.106	2.478	2.457	2.89	4.826	5.678	4.348	5.116	ns
12 mA	Slow	2.747	3.232	2.296	2.701	2.724	3.204	5.39	6.342	4.938	5.81	ns
	Medium	2.493	2.934	2.102	2.473	2.483	2.921	5.166	6.078	4.65	5.471	ns
	Medium fast	2.382	2.803	2.006	2.36	2.371	2.789	5.067	5.962	4.546	5.349	ns
	Fast	2.369	2.787	1.999	2.352	2.357	2.773	5.063	5.958	4.538	5.339	ns
16 mA	Slow	2.677	3.149	2.213	2.604	2.649	3.116	5.575	6.56	5.08	5.977	ns
	Medium	2.432	2.862	2.028	2.386	2.421	2.848	5.372	6.32	4.801	5.649	ns
	Medium fast	2.324	2.734	1.937	2.278	2.311	2.718	5.297	6.233	4.7	5.531	ns
	Fast	2.313	2.721	1.929	2.269	2.3	2.706	5.296	6.231	4.699	5.529	ns

1 Delay increases with drive strength are inherent to built-in slew control circuitry for SSO management.

TABLE 3-45: LVCMOS 2.5V TRANSMITTER CHARACTERISTICS FOR MSIO BANK (OUTPUT AND TRISTATE BUFFERS)

Output Drive Selection	Slew Control	T_{DP}		T_{ZL}		T_{ZH}		T_{HZ}[1]		T_{LZ}[1]		Unit
		–1	–Std	–1	–Std	–1	–Std	–1	–Std	–1	–Std	
2 mA	Slow	3.48	4.095	3.855	4.534	3.785	4.453	2.12	2.494	3.45	4.059	ns
4 mA	Slow	2.583	3.039	3.042	3.579	3.138	3.691	4.143	4.874	4.687	5.513	ns
6 mA	Slow	2.392	2.815	2.669	3.139	2.82	3.317	4.909	5.775	5.083	5.98	ns
8 mA	Slow	2.309	2.717	2.565	3.017	2.74	3.223	5.812	6.837	5.523	6.497	ns
12 mA	Slow	2.333	2.745	2.437	2.867	2.626	3.089	6.131	7.213	5.712	6.72	ns
16 mA	Slow	2.412	2.838	2.335	2.747	2.533	2.979	6.54	7.694	6.007	7.067	ns

1 Delay increases with drive strength are inherent to built-in slew control circuitry for SSO management.

TABLE 3-46: LVCMOS 2.5V TRANSMITTER CHARACTERISTICS FOR MSIOD BANK (OUTPUT AND TRISTATE BUFFERS)

Output Drive Selection	Slew Control	T_{DP}		T_{ZL}		T_{ZH}		T_{HZ}[1]		T_{LZ}[1]		Unit
		–1	–Std	–1	–Std	–1	–Std	–1	–Std	–1	–Std	
2 mA	Slow	2.206	2.596	2.678	3.15	2.64	3.106	4.935	5.805	4.74	5.576	ns
4 mA	Slow	1.835	2.159	2.242	2.637	2.256	2.654	5.413	6.368	5.15	6.059	ns
6 mA	Slow	1.709	2.01	2.132	2.508	2.167	2.549	5.813	6.838	5.499	6.469	ns
8 mA	Slow	1.63	1.918	1.958	2.303	2.012	2.367	6.226	7.324	5.816	6.842	ns
12 mA	Slow	1.648	1.939	1.86	2.187	1.921	2.259	6.519	7.669	6.027	7.09	ns

1 Delay increases with drive strength are inherent to built-in slew control circuitry for SSO management.

3.5.8 1.8V LVCMOS

LVCMOS 1.8 is a general standard for 1.8V applications and is supported in IGLOO 2 FPGAs and SmartFusion 2 SoC FPGAs in compliance to the JEDEC specification JESD8-7A.

Minimum and Maximum DC/AC Input and Output Levels Specification

TABLE 3-47: LVCMOS 1.8V DC RECOMMENDED OPERATING CONDITIONS

Parameter	Symbol	Min.	Typ.	Max.	Unit
LVCMOS 1.8V DC Recommended Operating Conditions					
Supply voltage	V_{DDI}	1.710	1.8	1.89	V

TABLE 3-48: LVCMOS 1.8V DC INPUT VOLTAGE SPECIFICATION

Parameter	Symbol	Min.	Max.	Unit
DC input logic high (for MSIOD and DDRIO I/O banks)	V_{IH} (DC)	0.65 × V_{DDI}	1.89	V
DC input logic high (for MSIO I/O bank)	V_{IH} (DC)	0.65 × V_{DDI}	3.45	V
DC input logic low	V_{IL} (DC)	–0.3	0.35 × V_{DDI}	V
Input current high[1]	I_{IH} (DC)	—	—	—
Input current low[1]	I_{IL} (DC)	—	—	—

1 See Table 3-22.

© 2026 Microchip Technology Inc. and its subsidiaries

TABLE 3-49: LVCMOS 1.8V DC OUTPUT VOLTAGE SPECIFICATION

Parameter	Symbol	Min.	Max.	Unit
DC output logic high	V_{OH}	V_{DDI} – 0.45	—	V
DC output logic low	V_{OL}	—	0.45	V

TABLE 3-50: LVCMOS 1.8V MINIMUM AND MAXIMUM AC SWITCHING SPEED

Parameter	Symbol	Max.	Unit	Conditions
Maximum data rate (for DDRIO I/O bank)[1]	D_{MAX}	400	Mbps	AC loading: 17 pF load, maximum drive/slew
Maximum data rate (for MSIO I/O bank)	D_{MAX}	295	Mbps	AC loading: 17 pF load, maximum drive/slew
Maximum data rate (for MSIOD I/O bank)[1]	D_{MAX}	400	Mbps	AC loading: 17 pF load, maximum drive/slew

1 Maximum Data Rate applies for Drive Strength 8 mA and above, All Slews.

TABLE 3-51: LVCMOS 1.8V AC CALIBRATED IMPEDANCE OPTION

Parameter	Symbol	Typ.	Unit
Supported output driver calibrated impedance (for DDRIO I/O bank)	Rodt_cal	75, 60, 50, 33, 25, 20	Ω

TABLE 3-52: LVCMOS 1.8V AC TEST PARAMETER SPECIFICATIONS

Parameter	Symbol	Typ.	Unit
Measuring/trip point for data path	V_{TRIP}	0.9	V
Resistance for enable path (T_{ZH}, T_{ZL}, T_{HZ}, T_{LZ})	R_{ENT}	2k	Ω
Capacitive loading for enable path (T_{ZH}, T_{ZL}, T_{HZ}, T_{LZ})	C_{ENT}	5	pF
Capacitive loading for data path (T_{DP})	C_{LOAD}	5	pF

TABLE 3-53: LVCMOS 1.8 V TRANSMITTER DRIVE STRENGTH SPECIFICATIONS

Output Drive Selection			V_{OH} (V)	V_{OL} (V)	IOH (at V_{OH}) mA	IOL (at V_{OL}) mA
MSIO I/O Bank	MSIOD I/O Bank	DDRIO I/O Bank	Min.	Max.		
2 mA	2 mA	2 mA	V_{DDI} –0.45	0.45	2	2
4 mA	4 mA	4 mA	V_{DDI} –0.45	0.45	4	4
6 mA	6 mA	6 mA	V_{DDI} –0.45	0.45	6	6
8 mA	8 mA	8 mA	V_{DDI} –0.45	0.45	8	8
10 mA	10 mA	10 mA	V_{DDI} –0.45	0.45	10	10
12 mA	—	12 mA	V_{DDI} –0.45	0.45	12	12
—	—	16 mA[1]	V_{DDI} –0.45	0.45	16	16

1 16 mA drive strengths, all slews, meets LPDDR JEDEC electrical compliance.

AC Switching Characteristics

Worst commercial-case conditions: T_J = 85 °C, V_{DD} = 1.14 V, V_{DDI} = 1.71V.

TABLE 3-54: LVCMOS 1.8 V RECEIVER CHARACTERISTICS (INPUT BUFFERS)

	On-Die Termination (ODT)	T_{PY}		T_{PYS}		Unit
		–1	–Std	–1	–Std	
LVCMOS 1.8V (for DDRIO I/O bank with Fixed Codes)	None	1.968	2.315	2.099	2.47	ns

TABLE 3-54: LVCMOS 1.8 V RECEIVER CHARACTERISTICS (INPUT BUFFERS) (CONTINUED)

	On-Die Termination (ODT)	T_{PY}		T_{PYS}		Unit
		–1	–Std	–1	–Std	
LVCMOS 1.8V (for MSIO I/O bank)	None	2.898	3.411	2.883	3.393	ns
	50	3.05	3.59	3.044	3.583	ns
	75	2.999	3.53	2.987	3.516	ns
	150	2.947	3.469	2.933	3.452	ns
LVCMOS 1.8V (for MSIOD I/O bank)	None	2.611	3.071	2.598	3.057	ns
	50	2.775	3.264	2.775	3.265	ns
	75	2.72	3.2	2.712	3.19	ns
	150	2.666	3.137	2.655	3.123	ns

TABLE 3-55: LVCMOS 1.8V TRANSMITTER CHARACTERISTICS FOR DDRIO I/O BANK WITH FIXED CODE (OUTPUT AND TRISTATE BUFFERS)

Output Drive Selection	Slew Control	T_{DP}		T_{ZL}		T_{ZH}		T_{HZ}[1]		T_{LZ}[1]		Unit
		–1	–Std	–1	–Std	–1	–Std	–1	–Std	–1	–Std	
2 mA	Slow	4.234	4.981	3.646	4.29	4.245	4.995	4.908	5.774	4.434	5.216	ns
	Medium	3.824	4.498	3.282	3.861	3.834	4.511	4.625	5.441	4.116	4.843	ns
	Medium fast	3.627	4.267	3.111	3.66	3.637	4.279	4.481	5.272	3.984	4.687	ns
	Fast	3.605	4.241	3.097	3.644	3.615	4.253	4.472	5.262	3.973	4.674	ns
4 mA	Slow	3.923	4.615	3.314	3.9	3.918	4.61	5.403	6.356	4.894	5.757	ns
	Medium	3.518	4.138	2.961	3.484	3.515	4.135	5.121	6.025	4.561	5.366	ns
	Medium fast	3.321	3.907	2.783	3.275	3.317	3.903	4.966	5.843	4.426	5.206	ns
	Fast	3.301	3.883	2.77	3.259	3.296	3.878	4.957	5.831	4.417	5.196	ns
6 mA	Slow	3.71	4.364	3.104	3.652	3.702	4.355	5.62	6.612	5.08	5.977	ns
	Medium	3.333	3.921	2.779	3.27	3.325	3.913	5.346	6.289	4.777	5.62	ns
	Medium fast	3.155	3.712	2.62	3.083	3.146	3.702	5.21	6.13	4.657	5.479	ns
	Fast	3.134	3.688	2.608	3.068	3.125	3.677	5.202	6.12	4.648	5.468	ns
8 mA	Slow	3.619	4.258	3.007	3.538	3.607	4.244	5.815	6.841	5.249	6.175	ns
	Medium	3.246	3.819	2.686	3.16	3.236	3.807	5.542	6.52	4.936	5.807	ns
	Medium fast	3.066	3.607	2.525	2.971	3.054	3.593	5.405	6.359	4.811	5.66	ns
	Fast	3.046	3.584	2.513	2.957	3.034	3.57	5.401	6.353	4.803	5.651	ns
10 mA	Slow	3.498	4.115	2.878	3.386	3.481	4.096	6.046	7.113	5.444	6.404	ns
	Medium	3.138	3.692	2.569	3.023	3.126	3.678	5.782	6.803	5.129	6.034	ns
	Medium fast	2.966	3.489	2.414	2.841	2.951	3.472	5.666	6.665	5.013	5.897	ns
	Fast	2.945	3.464	2.401	2.826	2.93	3.448	5.659	6.658	5.003	5.886	ns
12 mA	Slow	3.417	4.02	2.807	3.303	3.401	4.002	6.083	7.156	5.464	6.428	ns
	Medium	3.076	3.618	2.519	2.964	3.063	3.604	5.828	6.856	5.176	6.089	ns
	Medium fast	2.913	3.427	2.376	2.795	2.898	3.41	5.725	6.736	5.072	5.966	ns
	Fast	2.894	3.405	2.362	2.78	2.879	3.388	5.715	6.724	5.064	5.957	ns
16 mA	Slow	3.366	3.96	2.751	3.237	3.348	3.939	6.226	7.324	5.576	6.56	ns
	Medium	3.03	3.565	2.47	2.906	3.017	3.55	5.981	7.036	5.282	6.214	ns
	Medium fast	2.87	3.377	2.328	2.739	2.854	3.358	5.895	6.935	5.18	6.094	ns
	Fast	2.853	3.357	2.314	2.723	2.837	3.338	5.889	6.929	5.177	6.09	ns

© 2026 Microchip Technology Inc. and its subsidiaries

1 Delay increases with drive strength are inherent to built-in slew control circuitry for SSO management.

TABLE 3-56: LVCMOS 1.8V TRANSMITTER CHARACTERISTICS FOR MSIO I/O BANK

Output Drive Selection	Slew Control	T_{DP}		T_{ZL}		T_{ZH}		T_{HZ}[1]		T_{LZ}[1]		Unit
		–1	–Std	–1	–Std	–1	–Std	–1	–Std	–1	–Std	
2 mA	Slow	3.441	4.047	4.165	4.9	4.413	5.192	4.891	5.755	5.138	6.044	ns
4 mA	Slow	3.218	3.786	3.642	4.284	3.941	4.636	5.665	6.665	5.568	6.551	ns
6 mA	Slow	3.141	3.694	3.501	4.118	3.823	4.498	6.587	7.75	6.032	7.096	ns
8 mA	Slow	3.165	3.723	3.319	3.904	3.654	4.298	6.898	8.115	6.216	7.313	ns
10 mA	Slow	3.202	3.767	3.278	3.857	3.616	4.254	7.25	8.529	6.435	7.571	ns
12 mA	Slow	3.277	3.855	3.175	3.736	3.519	4.139	7.392	8.697	6.538	7.692	ns

1 Delay increases with drive strength are inherent to built-in slew control circuitry for SSO management.

TABLE 3-57: LVCMOS 1.8V TRANSMITTER CHARACTERISTICS FOR MSIOD I/O BANK

Output Drive Selection	Slew Control	T_{DP}		T_{ZL}		T_{ZH}		T_{HZ}[1]		T_{LZ}[1]		Unit
		–1	–Std	–1	–Std	–1	–Std	–1	–Std	–1	–Std	
2 mA	Slow	2.725	3.206	3.316	3.901	3.484	4.099	5.204	6.123	4.997	5.88	ns
4 mA	Slow	2.242	2.638	2.777	3.267	2.947	3.466	5.729	6.74	5.448	6.41	ns
6 mA	Slow	1.995	2.347	2.466	2.901	2.63	3.094	6.372	7.496	5.987	7.043	ns
8 mA	Slow	2.001	2.354	2.44	2.87	2.6	3.058	6.633	7.804	6.193	7.286	ns
10 mA	Slow	2.025	2.382	2.312	2.719	2.47	2.906	6.94	8.165	6.412	7.544	ns

1 Delay increases with drive strength are inherent to built-in slew control circuitry for SSO management.

3.5.9 1.5V LVCMOS

LVCMOS 1.5 is a general standard for 1.5V applications and is supported in IGLOO 2 FPGAs and SmartFusion 2 SoC FPGAs in compliance to the JEDEC specification JESD8-11A.

Minimum and Maximum DC/AC Input and Output Levels Specification

TABLE 3-58: LVCMOS 1.5 V_{DC} RECOMMENDED OPERATING CONDITIONS

Parameter	Symbol	Min.	Typ.	Max.	Unit
Supply voltage	V_{DDI}	1.425	1.5	1.575	V

TABLE 3-59: LVCMOS 1.5 V_{DC} INPUT VOLTAGE SPECIFICATION

Parameter	Symbol	Min.	Max.	Unit
DC input logic high for (MSIOD and DDRIO I/O banks)	V_{IH} (DC)	0.65 × V_{DDI}	1.575	V
DC input logic high (for MSIO I/O bank)	V_{IH} (DC)	0.65 × V_{DDI}	3.45	V
DC input logic low	V_{IL} (DC)	–0.3	0.35 × V_{DDI}	V
Input current high[1]	I_{IH} (DC)	—	—	—
Input current low[1]	I_{IL} (DC	—	—	—

1 See Table 3-22.

TABLE 3-60: LVCMOS 1.5 V_{DC} OUTPUT VOLTAGE SPECIFICATION

Parameter	Symbol	Min.	Max.	Unit
DC output logic high	VOH	V_{DDI} × 0.75	—	V

TABLE 3-60: LVCMOS 1.5 V_{DC} OUTPUT VOLTAGE SPECIFICATION

DC output logic low	VOL	—	V_{DDI} × 0.25	V

TABLE 3-61: LVCMOS 1.5V AC MINIMUM AND MAXIMUM SWITCHING SPEED

Parameter	Symbol	Max.	Unit	Conditions
Maximum data rate (for DDRIO I/O bank)	D_{MAX}	235	Mbps	AC loading: 17 pF load, maximum drive/slew
Maximum data rate (for MSIO I/O bank)	D_{MAX}	160	Mbps	AC loading: 17 pF load, maximum drive/slew
Maximum data rate (for MSIOD I/O bank)	D_{MAX}	220	Mbps	AC loading: 17 pF load, maximum drive/slew

TABLE 3-62: LVCMOS 1.5V AC CALIBRATED IMPEDANCE OPTION

Parameter	Symbol	Typ.	Unit
Supported output driver calibrated impedance (for DDRIO I/O bank)	RODT_-CAL	75, 60, 50, 40	Ω

TABLE 3-63: LVCMOS 1.5V AC TEST PARAMETER SPECIFICATIONS

Parameter	Symbol	Typ.	Unit
Measuring/trip point	V_{TRIP}	0.75	V
Resistance for enable path (T_{ZH}, T_{ZL}, T_{HZ}, T_{LZ})	R_{ENT}	2K	Ω
Capacitive loading for enable path (T_{ZH}, T_{ZL}, T_{HZ}, T_{LZ})	C_{ENT}	5	pF
Capacitive loading for data path (T_{DP})	C_{LOAD}	5	pF

TABLE 3-64: LVCMOS 1.5V TRANSMITTER DRIVE STRENGTH SPECIFICATIONS

Output Drive Selection			V_{OH} (V)	V_{OL} (V)	IOH (at V_{OH}) mA	IOL (at V_{OL}) mA
MSIO I/O Bank	MSIOD I/O Bank	DDRIO I/O Bank	Min.	Max.		
2 mA	2 mA	2 mA	V_{DDI} × 0.75	V_{DDI} × 0.25	2	2
4 mA	4 mA	4 mA	V_{DDI} × 0.75	V_{DDI} × 0.25	4	4
6 mA	6 mA	6 mA	V_{DDI} × 0.75	V_{DDI} × 0.25	6	6
8 mA	—	8 mA	V_{DDI} × 0.75	V_{DDI} × 0.25	8	8
—	—	10 mA	V_{DDI} × 0.75	V_{DDI} × 0.25	10	10
—	—	12 mA	V_{DDI} × 0.75	V_{DDI} × 0.25	12	12

Note: For a detailed I/V curve, use the corresponding IBIS models:

- For IGLOO 2: https://www.microchip.com/en-us/products/fpgas-and-plds/fpgas/igloo-2-fpgas#Documentation
- For SmartFusion 2: https://www.microchip.com/en-us/products/fpgas-and-plds/system-on-chip-fpgas/smartfusion-2-fpgas#Documentation

AC Switching Characteristics

Worst commercial-case conditions: T_J = 85 °C, V_{DD} = 1.14 V, V_{DDI} = 1.425V.

TABLE 3-65: LVCMOS 1.5V RECEIVER CHARACTERISTICS FOR DDRIO I/O BANK WITH FIXED CODES (INPUT BUFFERS)

On-Die Termination (ODT)	T_{PY}		T_{PYS}		Unit
	–1	–Std	–1	–Std	
None	2.051	2.413	2.086	2.455	ns

© 2026 Microchip Technology Inc. and its subsidiaries

TABLE 3-66: LVCMOS 1.5V RECEIVER CHARACTERISTICS FOR MSIO I/O BANK (INPUT BUFFERS)

On-Die Termination (ODT)	T_{PY}		T_{PYS}		Unit
	–1	–Std	–1	–Std	
None	3.311	3.896	3.285	3.865	ns
50	3.654	4.299	3.623	4.263	ns
75	3.533	4.156	3.501	4.119	ns
150	3.415	4.018	3.388	3.986	ns

TABLE 3-67: LVCMOS 1.5V RECEIVER CHARACTERISTICS FOR MSIOD I/O BANK (INPUT BUFFERS)

On-Die Termination (ODT)	T_{PY}		T_{PYS}		Unit
	–1	–Std	–1	–Std	
None	2.959	3.481	2.93	3.447	ns
50	3.298	3.88	3.268	3.845	ns
75	3.162	3.719	3.128	3.68	ns
150	3.053	3.592	3.021	3.554	ns

TABLE 3-68: LVCMOS 1.5V TRANSMITTER CHARACTERISTICS FOR DDRIO I/O BANK (OUTPUT AND TRISTATE BUFFERS)

Output Drive Selection	Slew Control	T_{DP}		T_{ZL}		T_{ZH}		T_{HZ}[1]		T_{LZ}[1]		Unit
		–1	–Std	–1	–Std	–1	–Std	–1	–Std	–1	–Std	
2 mA	Slow	5.122	6.026	4.31	5.07	5.145	6.052	5.258	6.186	4.672	5.496	ns
	Medium	4.58	5.389	3.86	4.54	4.6	5.411	4.977	5.855	4.357	5.126	ns
	Medium fast	4.323	5.086	3.629	4.269	4.341	5.107	4.804	5.652	4.228	4.974	ns
	Fast	4.296	5.054	3.609	4.245	4.314	5.075	4.791	5.636	4.219	4.963	ns
4 mA	Slow	4.449	5.235	3.707	4.361	4.443	5.227	6.058	7.127	5.458	6.421	ns
	Medium	3.961	4.66	3.264	3.839	3.954	4.651	5.778	6.797	5.116	6.018	ns
	Medium fast	3.729	4.387	3.043	3.579	3.72	4.376	5.63	6.624	4.981	5.86	ns
	Fast	3.704	4.358	3.027	3.56	3.695	4.347	5.624	6.617	4.973	5.851	ns
6 mA	Slow	4.244	4.993	3.465	4.076	4.233	4.979	6.39	7.518	5.736	6.748	ns
	Medium	3.774	4.44	3.05	3.587	3.762	4.426	6.114	7.193	5.397	6.35	ns
	Medium fast	3.544	4.17	2.839	3.339	3.529	4.152	5.978	7.033	5.27	6.2	ns
	Fast	3.519	4.14	2.82	3.317	3.504	4.122	5.965	7.017	5.259	6.187	ns
8 mA	Slow	4.099	4.823	3.311	3.894	4.087	4.807	6.584	7.746	5.854	6.888	ns
	Medium	3.656	4.301	2.927	3.443	3.642	4.284	6.311	7.425	5.553	6.533	ns
	Medium fast	3.437	4.044	2.731	3.213	3.42	4.023	6.182	7.273	5.435	6.394	ns
	Fast	3.41	4.012	2.715	3.193	3.393	3.991	6.178	7.269	5.425	6.383	ns

TABLE 3-68: LVCMOS 1.5V TRANSMITTER CHARACTERISTICS FOR DDRIO I/O BANK (OUTPUT AND TRISTATE BUFFERS) (CONTINUED)

Output Drive Selection	Slew Control	T_{DP}		T_{ZL}		T_{ZH}		T_{HZ}[1]		T_{LZ}[1]		Unit
		–1	–Std	–1	–Std	–1	–Std	–1	–Std	–1	–Std	
10 mA	Slow	4.029	4.74	3.238	3.809	4.015	4.723	6.732	7.921	5.965	7.018	ns
	Medium	3.601	4.237	2.867	3.372	3.586	4.218	6.473	7.615	5.669	6.669	ns
	Medium fast	3.384	3.981	2.672	3.143	3.365	3.958	6.351	7.471	5.55	6.529	ns
	Fast	3.357	3.949	2.655	3.123	3.338	3.927	6.345	7.464	5.54	6.518	ns
12 mA	Slow	3.974	4.675	3.196	3.759	3.958	4.656	6.842	8.049	6.068	7.139	ns
	Medium	3.55	4.176	2.827	3.326	3.534	4.157	6.584	7.746	5.751	6.766	ns
	Medium fast	3.345	3.935	2.638	3.103	3.325	3.911	6.488	7.633	5.641	6.637	ns
	Fast	3.316	3.902	2.621	3.083	3.297	3.878	6.486	7.63	5.626	6.619	ns

1 Delay increases with drive strength are inherent to built-in slew control circuitry for SSO management.

TABLE 3-69: LVCMOS 1.5V TRANSMITTER CHARACTERISTICS FOR MSIO I/O BANK (OUTPUT AND TRISTATE BUFFERS)

Output Drive Selection	Slew Control	T_{DP}		T_{ZL}		T_{ZH}		T_{HZ}[1]		T_{LZ}[1]		Unit
		–1	–Std	–1	–Std	–1	–Std	–1	–Std	–1	–Std	
2 mA	Slow	4.423	5.203	5.397	6.35	5.686	6.69	5.609	6.599	5.561	6.542	ns
4 mA	Slow	4.05	4.765	4.503	5.298	4.92	5.788	7.358	8.657	6.525	7.677	ns
6 mA	Slow	4.081	4.801	4.259	5.012	4.699	5.528	7.659	9.011	6.709	7.893	ns
8 mA	Slow	4.234	4.98	4.068	4.786	4.521	5.319	8.218	9.668	7.05	8.294	ns

1 Delay increases with drive strength are inherent to built-in slew control circuitry for SSO management.

TABLE 3-70: LVCMOS 1.5V TRANSMITTER CHARACTERISTICS FOR MSIOD I/O BANK (OUTPUT AND TRISTATE BUFFERS)

Output Drive Selection	Slew Control	T_{DP}		T_{ZL}		T_{ZH}		T_{HZ}[1]		T_{LZ}[1]		Unit
		–1	–Std	–1	–Std	–1	–Std	–1	–Std	–1	–Std	
2 mA	Slow	2.735	3.218	3.371	3.966	3.618	4.257	6.03	7.095	5.705	6.712	ns
4 mA	Slow	2.426	2.854	2.992	3.521	3.221	3.79	6.738	7.927	6.298	7.41	ns
6 mA	Slow	2.433	2.862	2.81	3.306	3.031	3.566	7.123	8.38	6.596	7.76	ns

1 Delay increases with drive strength are inherent to built-in slew control circuitry for SSO management.

3.5.10 1.2V LVCMOS

LVCMOS 1.2 is a general standard for 1.2V applications and is supported in IGLOO 2 FPGAs and SmartFusion 2 SoC FPGAs in compliance to the JEDEC specification JESD8-12A.

Minimum and Maximum DC/AC Input and Output Levels Specification

TABLE 3-71: LVCMOS 1.2V DC RECOMMENDED DC OPERATING CONDITIONS

Parameter	Symbol	Min.	Typ.	Max.	Unit
Supply voltage	V_{DDI}	1.140	1.2	1.26	V

© 2026 Microchip Technology Inc. and its subsidiaries

TABLE 3-72: LVCMOS 1.2V DC INPUT VOLTAGE SPECIFICATION

Parameter	Symbol	Min.	Max.	Unit
DC input logic high (for MSIOD and DDRIO I/O banks)	V_{IH} (DC)	0.65 × V_{DDI}	1.26	V
DC input logic high (for MSIO I/O bank)	V_{IH} (DC)	0.65 × V_{DDI}	3.45	V
DC input logic low	V_{IL} (DC)	–0.3	0.35 × V_{DDI}	V
Input current high[1]	I_{IH} (DC)	—	—	—
Input current low[1]	I_{IL} (DC)	—	—	—

1 See Table 3-22.

TABLE 3-73: LVCMOS 1.2V DC OUTPUT VOLTAGE SPECIFICATION

Parameter	Symbol	Min.	Max.	Unit
DC output logic high	V_{OH}	V_{DDI} × 0.75	—	V
DC output logic low	V_{OL}	—	V_{DDI} × 0.25	V

TABLE 3-74: LVCMOS 1.2V MINIMUM AND MAXIMUM AC SWITCHING SPEED

Parameter	Symbol	Max.	Unit	Conditions
Maximum data rate (for DDRIO I/O bank)	D_{MAX}	200	Mbps	AC loading: 17 pF load, maximum drive/slew
Maximum data rate (for MSIO I/O bank)	D_{MAX}	120	Mbps	AC loading: 17 pF load, maximum drive/slew
Maximum data rate (for MSIOD I/O bank)	D_{MAX}	160	Mbps	AC loading: 17 pF load, maximum drive/slew

TABLE 3-75: LVCMOS 1.2V AC CALIBRATED IMPEDANCE OPTION

Parameter	Symbol	Typ.	Unit
Supported output driver calibrated impedance (for DDRIO I/O bank)	RODT_CAL	75, 60, 50, 40	Ω

TABLE 3-76: LVCMOS 1.2V AC TEST PARAMETER SPECIFICATIONS

Parameter	Symbol	Typ.	Unit
Measuring/trip point	V_{TRIP}	0.6	V
Resistance for enable path (T_{ZH}, T_{ZL}, T_{HZ}, T_{LZ})	R_{ENT}	2K	Ω
Capacitive loading for enable path (T_{ZH}, T_{ZL}, T_{HZ}, T_{LZ})	C_{ENT}	5	pF
Capacitive loading for data path (T_{DP})	C_{LOAD}	5	pF

TABLE 3-77: LVCMOS 1.2V TRANSMITTER DRIVE STRENGTH SPECIFICATIONS

Output Drive Selection			V_{OH} (V)	V_{OL} (V)	IOH (at V_{OH}) mA	IOL (at V_{OL}) mA
MSIO I/O Bank	MSIOD I/O Bank	DDRIO I/O Bank	Min.	Max.		
2 mA	2 mA	2 mA	V_{DDI} × 0.75	V_{DDI} × 0.25	2	2
4 mA	4 mA	4 mA	V_{DDI} × 0.75	V_{DDI} × 0.25	4	4
		6 mA	V_{DDI} × 0.75	V_{DDI} × 0.25	6	6

Note: For a detailed I/V curve, use the corresponding IBIS models:

- For IGLOO 2: https://www.microchip.com/en-us/products/fpgas-and-plds/fpgas/igloo-2-fpgas#Documentation.
- For SmartFusion 2: https://www.microchip.com/en-us/products/fpgas-and-plds/system-on-chip-fpgas/smartfusion-2-fpgas#Documentation.

AC Switching Characteristics

Worst commercial-case conditions: T_J = 85 °C, V_{DD} = 1.14 V, V_{DDI} = 1.14V.

TABLE 3-78: LVCMOS 1.2V RECEIVER CHARACTERISTICS FOR DDRIO I/O BANK WITH FIXED CODE (INPUT BUFFERS)

On-Die Termination (ODT)	T_{PY}		T_{PYS}		Unit
	–1	–Std	–1	–Std	
None	2.448	2.88	2.466	2.901	ns

TABLE 3-79: LVCMOS 1.2V RECEIVER CHARACTERISTICS FOR MSIO I/O BANK (INPUT BUFFERS)

On-Die Termination ODT)	T_{PY}		T_{PYS}		Unit
	–1	–Std	–1	–Std	
None	4.714	5.545	4.675	5.5	ns
50	6.668	7.845	6.579	7.74	ns
75	5.832	6.862	5.76	6.777	ns
150	5.162	6.073	5.111	6.014	ns

TABLE 3-80: LVCMOS 1.2V RECEIVER CHARACTERISTICS FOR MSIOD I/O BANK (INPUT BUFFERS)

On-Die Termination (ODT)	T_{PY}		T_{PYS}		Unit
	–1	–Std	–1	–Std	
None	4.154	4.887	4.114	4.84	ns
50	6.918	8.139	6.806	8.008	ns
75	5.613	6.603	5.533	6.509	ns
150	4.716	5.549	4.657	5.479	ns

TABLE 3-81: LVCMOS 1.2V TRANSMITTER CHARACTERISTICS FOR DDRIO I/O BANK (OUTPUT AND TRISTATE BUFFERS)

Output Drive Selection	Slew Control	T_{DP}		T_{ZL}		T_{ZH}		T_{HZ}[1]		T_{LZ}[1]		Unit
		–1	–Std	–1	–Std	–1	–Std	–1	–Std	–1	–Std	
2 mA	Slow	6.713	7.897	5.362	6.308	6.723	7.909	7.233	8.51	6.375	7.499	ns
	Medium	5.912	6.955	4.616	5.43	5.915	6.959	6.887	8.102	6.009	7.069	ns
	Medium fast	5.5	6.469	4.231	4.978	5.5	6.471	6.672	7.849	5.835	6.865	ns
	Fast	5.462	6.426	4.194	4.935	5.463	6.427	6.646	7.819	5.828	6.857	ns
4 mA	Slow	6.109	7.186	4.708	5.539	6.098	7.174	8.005	9.418	7.033	8.274	ns
	Medium	5.355	6.299	4.034	4.746	5.338	6.28	7.637	8.985	6.672	7.849	ns
	Medium fast	4.953	5.826	3.685	4.336	4.932	5.802	7.44	8.752	6.499	7.646	ns
	Fast	4.911	5.777	3.658	4.303	4.89	5.754	7.427	8.737	6.488	7.632	ns
6 mA	Slow	5.89	6.929	4.506	5.301	5.874	6.911	8.337	9.808	7.315	8.605	ns
	Medium	5.176	6.089	3.862	4.543	5.155	6.065	7.986	9.394	6.943	8.168	ns
	Medium fast	4.792	5.637	3.523	4.145	4.765	5.606	7.808	9.186	6.775	7.97	ns
	Fast	4.754	5.593	3.486	4.101	4.728	5.563	7.777	9.149	6.769	7.963	ns

© 2026 Microchip Technology Inc. and its subsidiaries

1 Delay increases with drive strength are inherent to built-in slew control circuitry for SSO management.

TABLE 3-82: LVCMOS 1.2V TRANSMITTER CHARACTERISTICS FOR MSIO I/O BANK (OUTPUT AND TRISTATE BUFFERS)

Output Drive Selection	Slew Control	T_{DP}		T_{ZL}		T_{ZH}		T_{HZ}[1]		T_{LZ}[1]		Unit
		–1	–Std	–1	–Std	–1	–Std	–1	–Std	–1	–Std	
2 mA	Slow	6.746	7.937	7.458	8.774	8.172	9.614	9.867	11.608	8.393	9.874	ns
4 mA	Slow	7.068	8.315	6.678	7.857	7.474	8.793	10.986	12.924	9.043	10.638	ns

1 Delay increases with drive strength are inherent to built-in slew control circuitry for SSO management.

TABLE 3-83: LVCMOS 1.2V TRANSMITTER CHARACTERISTICS FOR MSIOD I/O BANK (OUTPUT AND TRISTATE BUFFERS)

Output Drive Selection	Slew Control	T_{DP}		T_{ZL}		T_{ZH}		T_{HZ}[1]		T_{LZ}[1]		Unit
		–1	–Std	–1	–Std	–1	–Std	–1	–Std	–1	–Std	
2 mA	Slow	3.883	4.568	4.868	5.726	5.329	6.269	7.994	9.404	7.527	8.855	ns
4 mA	Slow	3.774	4.44	4.188	4.926	4.613	5.426	8.972	10.555	8.315	9.782	ns

1 Delay increases with drive strength are inherent to built-in slew control circuitry for SSO management.

3.5.11 3.3V PCI/PCIX

Peripheral Component Interface (PCI) for 3.3V standards specify support for 33 MHz and 66 MHz PCI bus applications.

Minimum and Maximum DC/AC Input and Output Levels Specification (Applicable to MSIO Bank Only)

TABLE 3-84: PCI/PCI-X DC RECOMMENDED OPERATING CONDITIONS

Parameter	Symbol	Min.	Typ.	Max.	Unit
Supply voltage	V_{DDI}	3.15	3.3	3.45	V

TABLE 3-85: PCI/PCI-X DC INPUT VOLTAGE SPECIFICATION

Parameter	Symbol	Min.	Max.	Unit
DC input voltage	V_I	0	3.45	V
Input current high[1]	I_{IH}(DC)	—	—	—
Input current low[1]	I_{IL}(DC)	—	—	—

1 See Table 3-22.

TABLE 3-86: PCI/PCI-X DC OUTPUT VOLTAGE SPECIFICATION

Parameter	Symbol	Min.	Typ.	Max.	Unit
DC output logic high	V_{OH}	Per PCI specification			V
DC output logic low	V_{OL}	Per PCI specification			V

TABLE 3-87: PCI/PCI-X MINIMUM AND MAXIMUM AC SWITCHING SPEED

Parameter	Symbol	Max.	Unit	Conditions
Maximum data rate (MSIO I/O bank)	D_{MAX}	630	Mbps	AC Loading: per JEDEC specifications

TABLE 3-88: PCI/PCI-X AC TEST PARAMETER SPECIFICATIONS

Parameter	Symbol	Typ.	Unit

TABLE 3-88: PCI/PCI-X AC TEST PARAMETER SPECIFICATIONS

Measuring/trip point for data path (falling edge)	V_{TRIP}	0.615 × V_{DDI}	V
Measuring/trip point for data path (rising edge)	V_{TRIP}	0.285 × V_{DDI}	V
Resistance for data test path	RTT_TEST	25	Ω
Resistance for enable path (T_{ZH}, T_{ZL}, T_{HZ}, T_{LZ})	R_{ENT}	2K	Ω
Capacitive loading for enable path (T_{ZH}, T_{ZL}, T_{HZ}, T_{LZ})	C_{ENT}	5	pF
Capacitive loading for data path (T_{DP})	C_{LOAD}	10	pF

AC Switching Characteristics

Worst commercial-case conditions: T_J = 85 °C, V_{DD} = 1.14 V, and V_{DDI} = 3.0V.

.

TABLE 3-89: PCI/PCIX AC SWITCHING CHARACTERISTICS FOR RECEIVER FOR MSIO I/O BANK (INPUT BUFFERS)

On-Die Termination (ODT)	T_{PY}		T_{PYS}		Unit
	–1	–Std	–1	–Std	
None	2.229	2.623	2.238	2.633	ns

TABLE 3-90: PCI/PCIX AC SWITCHING CHARACTERISTICS FOR TRANSMITTER FOR MSIO I/O BANK (OUTPUT AND TRISTATE BUFFERS)

T_{DP}		T_{ZL}		T_{ZH}		T_{HZ}		T_{LZ}		Unit
–1	–Std	–1	–Std	–1	–Std	–1	–Std	–1	–Std	
2.146	2.525	2.043	2.404	2.084	2.452	6.095	7.171	5.558	6.539	ns

3.6 Memory Interface and Voltage Referenced I/O Standards

This section describes High-Speed Transceiver Logic (HSTL) memory interface and voltage reference I/O standards.

3.6.1 HIGH-SPEED TRANSCEIVER LOGIC (HSTL)

The HSTL standard is a general purpose high-speed bus standard sponsored by IBM (EIA/JESD8-6). IGLOO 2 FPGA and SmartFusion 2 SoC FPGA devices support two classes of the 1.5V HSTL. These differential versions of the standard require a differential amplifier input buffer and a push-pull output buffer.

Minimum and Maximum DC/AC Input and Output Levels Specification (Applicable to DDRIO Bank Only)

TABLE 3-91: HSTL RECOMMENDED DC OPERATING CONDITIONS

Parameter	Symbol	Min.	Typ.	Max.	Unit
Supply voltage	V_{DDI}	1.425	1.5	1.575	V
Termination voltage	V_{TT}	0.698	0.750	0.803	V
Input reference voltage	V_{REF}	0.698	0.750	0.803	V

TABLE 3-92: HSTL DC INPUT VOLTAGE SPECIFICATION

Parameter	Symbol	Min.	Max.	Unit
DC input logic high	V_{IH} (DC)	V_{REF} + 0.1	1.575	V
DC input logic low	V_{IL} (DC)	–0.3	V_{REF} – 0.1	V
Input current high[1]	I_{IH} (DC)	—	—	—
Input current low[1]	I_{IL} (DC)	—	—	—

1 See Table 3-22.

© 2026 Microchip Technology Inc. and its subsidiaries

TABLE 3-93: HSTL DC OUTPUT VOLTAGE SPECIFICATION APPLICABLE TO DDRIO I/O BANK ONLY

Parameter	Symbol	Min.	Max.	Unit
HSTL Class I				
DC output logic high	V_{OH}	V_{DDI} – 0.4	—	V
DC output logic low	V_{OL}	—	0.4	V
Output minimum source DC current (MSIO and DDRIO I/O banks)	I_{OH} at V_{OH}	–8.0	—	mA
Output minimum sink current (MSIO and DDRIO I/O banks)	I_{OL} at V_{OL}	8.0	—	mA
HSTL Class II				
DC output logic high	V_{OH}	V_{DDI} – 0.4	—	V
DC output logic low	V_{OL}	—	0.4	V
Output minimum source DC current	I_{OH} at V_{OH}	–16.0	—	mA
Output minimum sink current	I_{OL} at V_{OL}	16.0	—	mA

TABLE 3-94: HSTL DC DIFFERENTIAL VOLTAGE SPECIFICATION

Parameter	Symbol	Min.	Unit
DC input differential voltage	V_{ID} (DC)	0.2	V

TABLE 3-95: HSTL AC DIFFERENTIAL VOLTAGE SPECIFICATIONS

Parameter	Symbol	Min.	Max.	Unit
AC input differential voltage	V_{DIFF}	0.4	—	V
AC differential cross point voltage	V_x	0.68	0.9	V

TABLE 3-96: HSTL MINIMUM AND MAXIMUM AC SWITCHING SPEED

Parameter	Symbol	Max.	Unit	Conditions
Maximum data rate	D_{MAX}	400	Mbps	AC loading: per JEDEC specifications

TABLE 3-97: HSTL IMPEDANCE SPECIFICATION

Parameter	Symbol	Typ.	Unit	Conditions
Supported output driver calibrated impedance (for DDRIO I/O bank)	R_{REF}	25.5, 47.8	Ω	Reference resistance = 191Ω
Effective impedance value (ODT for DDRIO I/O bank only)	R_{TT}	47.8	Ω	Reference resistance = 191Ω

TABLE 3-98: HSTL AC TEST PARAMETER SPECIFICATION

Parameter	Symbol	Typ.	Unit
Measuring/trip point for data path	V_{TRIP}	0.75	V
Resistance for enable path (T_{ZH}, T_{ZL}, T_{HZ}, T_{LZ})	R_{ENT}	2K	Ω
Capacitive loading for enable path (T_{ZH}, T_{ZL}, T_{HZ}, T_{LZ})	C_{ENT}	5	pF
Reference resistance for data test path for HSTL15 Class I (T_{DP})	RTT_TEST	50	Ω
Reference resistance for data test path for HSTL15 Class II (T_{DP})	RTT_TEST	25	Ω
Capacitive loading for data path (T_{DP})	C_{LOAD}	5	pF

AC Switching Characteristics

Worst-case commercial conditions: T_J = 85 °C, V_{DD} = 1.14V, and worst-case V_{DDI}.

TABLE 3-99: HSTL RECEIVER CHARACTERISTICS FOR DDRIO I/O BANK WITH FIXED CODE (INPUT BUFFERS)

	On-Die Termination (ODT)	T_{PY}		Unit
		–1	–Std	
Pseudo differential	None	1.605	1.888	ns
	47.8	1.614	1.898	ns
True differential	None	1.622	1.909	ns
	47.8	1.628	1.916	ns

TABLE 3-100: HSTL TRANSMITTER CHARACTERISTICS FOR DDRIO I/O BANK (OUTPUT AND TRISTATE BUFFERS)

	T_{DP}		T_{ZL}		T_{ZH}		T_{HZ}		T_{LZ}		Unit
	–1	–Std	–1	–Std	–1	–Std	–1	–Std	–1	–Std	
HSTL Class I											
Single-ended	2.6	3.059	2.514	2.958	2.514	2.958	2.431	2.86	2.431	2.86	ns
Differential	2.621	3.083	2.648	3.115	2.647	3.113	2.925	3.442	2.923	3.44	ns
HSTL Class II											
Single-ended	2.511	2.954	2.488	2.927	2.49	2.93	2.409	2.833	2.411	2.836	ns
Differential	2.528	2.974	2.552	3.003	2.551	3.001	2.897	3.409	2.896	3.408	ns

3.6.2 STUB-SERIES TERMINATED LOGIC

Stub-Series Terminated Logic (SSTL) for 2.5V (SSTL2), 1.8V (SSTL18), and 1.5V (SSTL15) is supported in IGLOO 2 and SmartFusion 2 SoC FPGAs. SSTL2 is defined by JEDEC standard JESD8-9B and SSTL18 is defined by JEDEC standard JESD8-15. IGLOO 2 SSTL I/O configurations are designed to meet double data rate standards DDR/2/3 for general purpose memory buses. Double data rate standards are designed to meet their JEDEC specifications as defined by JEDEC standard JESD79F for DDR, JEDEC standard JESD79-2F for DDR, JEDEC standard JESD79-3D for DDR3, and JEDEC standard JESD209A for LPDDR.

3.6.3 STUB-SERIES TERMINATED LOGIC 2.5V (SSTL2)

SSTL2 Class I and Class II are supported in IGLOO 2 and SmartFusion 2 SoC FPGAs and also comply with reduced and full drive of double data rate (DDR) standards. IGLOO 2 and SmartFusion 2 SoC FPGA I/Os supports both standards for single-ended signaling and differential signaling for SSTL2. This standard requires a differential amplifier input buffer and a push-pull output buffer.

Minimum and Maximum DC/AC Input and Output Levels Specification

TABLE 3-101: DDR1/SSTL2 DC RECOMMENDED OPERATING CONDITIONS

Parameter	Symbol	Min.	Typ.	Max.	Unit
Supply voltage	V_{DDI}	2.375	2.5	2.625	V
Termination voltage	V_{TT}	1.164	1.250	1.339	V
Input reference voltage	V_{REF}	1.164	1.250	1.339	V

TABLE 3-102: DDR1/SSTL2 DC INPUT VOLTAGE SPECIFICATION

Parameter	Symbol	Min.	Max.	Unit
DC input logic high	V_{IH} (DC)	V_{REF} + 0.15	2.625	V
DC input logic low	V_{IL} (DC)	–0.3	VREF – 0.15	V
Input current high[1]	I_{IH} (DC)	—	—	—

© 2026 Microchip Technology Inc. and its subsidiaries

TABLE 3-102: DDR1/SSTL2 DC INPUT VOLTAGE SPECIFICATION (CONTINUED)

Parameter	Symbol	Min.	Max.	Unit
Input current low[1]	I_{IL} (DC)	—	—	—

1 See Table 3-22.

TABLE 3-103: DDR1/SSTL2 DC OUTPUT VOLTAGE SPECIFICATION

Parameter	Symbol	Min.	Max.	Unit
SSTL2 Class I (DDR Reduced Drive)				
DC output logic high	V_{OH}	V_{TT} + 0.608	—	V
DC output logic low	V_{OL}		V_{TT} – 0.608	V
Output minimum source DC current	I_{OH} at V_{OH}	8.1	—	mA
Output minimum sink current	I_{OL} at V_{OL}	–8.1	—	mA
SSTL2 Class II (DDR Full Drive) – Applicable to MSIO and DDRIO I/O Bank Only				
DC output logic high	V_{OH}	V_{TT} + 0.81	—	V
DC output logic low	V_{OL}	—	V_{TT} – 0.81	V
Output minimum source DC current	I_{OH} at V_{OH}	16.2	—	mA
Output minimum sink current	I_{OL} at V_{OL}	–16.2	—	mA

TABLE 3-104: DDR1/SSTL2 DC DIFFERENTIAL VOLTAGE SPECIFICATION

Parameter	Symbol	Min	Unit
DC input differential voltage	V_{ID} (DC)	0.3	V

TABLE 3-105: SSTL2 AC DIFFERENTIAL VOLTAGE SPECIFICATIONS

Parameter	Symbol	Min.	Max.	Unit
AC input differential voltage	V_{DIFF} (AC)	0.7	—	V
AC differential cross point voltage	V_x (AC)	0.5 × V_{DDI} – 0.2	0.5 × V_{DDI} + 0.2	V

TABLE 3-106: SSTL2 MINIMUM AND MAXIMUM AC SWITCHING SPEEDS

Parameter	Symbol	Max.	Unit	Conditions
Maximum data rate (for DDRIO I/O bank)	D_{MAX}	400	Mbps	AC loading: per JEDEC specifications
Maximum data rate (for MSIO I/O bank)	D_{MAX}	575	Mbps	AC loading: 17 pF load
Maximum data rate (for MSIOD I/O bank)	D_{MAX}	700	Mbps	AC loading: 3 pF/50 Ω load
		510	Mbps	AC loading: 17pF load

TABLE 3-107: SSTL2 AC IMPEDANCE SPECIFICATIONS

Parameter	Typ.	Unit	Conditions
Supported output driver calibrated impedance (for DDRIO I/O bank)	20, 42	Ω	Reference resistor = 150Ω

TABLE 3-108: DDR1/SSTL2 AC TEST PARAMETER SPECIFICATIONS

Parameter	Symbol	Typ	Unit
Measuring/trip point for data path	V_{TRIP}	1.25	V

TABLE 3-108: DDR1/SSTL2 AC TEST PARAMETER SPECIFICATIONS (CONTINUED)

Parameter	Symbol	Typ	Unit
Resistance for enable path (T_{ZH}, T_{ZL}, T_{HZ}, T_{LZ})	R_{ENT}	2K	Ω
Capacitive loading for enable path (T_{ZH}, T_{ZL}, T_{HZ}, T_{LZ})	C_{ENT}	5	pF
Reference resistance for data test path for SSTL2 Class I (T_{DP})	RTT_TEST	50	Ω
Reference resistance for data test path for SSTL2 Class II (T_{DP})	RTT_TEST	25	Ω
Capacitive loading for data path (T_{DP})	C_{LOAD}	5	pF

AC Switching Characteristics

Worst commercial-case conditions: T_J = 85 °C, V_{DD} = 1.14V, and V_{DDI} = 2.375V.

TABLE 3-109: SSTL2 RECEIVER CHARACTERISTICS FOR DDRIO I/O BANK (INPUT BUFFERS)

	On-Die Termination (ODT)	T_{PY}		Unit
		–1	–Std	
Pseudo differential	None	1.549	1.821	ns
True differential	None	1.589	1.87	ns

TABLE 3-110: SSTL2 RECEIVER CHARACTERISTICS FOR MSIO I/O BANK (INPUT BUFFERS)

	On-Die Termination (ODT)	T_{PY}		Unit
		–1	–Std	
Pseudo differential	None	2.798	3.293	ns
True differential	None	2.733	3.215	ns

TABLE 3-111: DDR1/SSTL2 RECEIVER CHARACTERISTICS FOR MSIOD I/O BANK (INPUT BUFFERS)

	On-Die Termination (ODT)	T_{PY}		Unit
		–1	–Std	
Pseudo differential	None	2.476	2.913	ns
True differential	None	2.475	2.911	ns

TABLE 3-112: SSTL2 CLASS I TRANSMITTER CHARACTERISTICS FOR DDRIO I/O BANK (OUTPUT AND TRISTATE BUFFERS)

	T_{DP}		T_{ZL}		T_{ZH}		T_{HZ}		T_{LZ}		Unit
	–1	–Std	–1	–Std	–1	–Std	–1	–Std	–1	–Std	
Single-ended	2.26	2.66	1.99	2.341	1.985	2.335	2.135	2.512	2.13	2.505	ns
Differential	2.26	2.658	2.202	2.591	2.201	2.589	2.393	2.815	2.392	2.814	ns

TABLE 3-113: DDR1/SSTL2 CLASS I TRANSMITTER CHARACTERISTICS FOR MSIO I/O BANK (OUTPUT AND TRISTATE BUFFERS)

	T_{DP}		T_{ZL}		T_{ZH}		T_{HZ}		T_{LZ}		Unit
	–1	–Std	–1	–Std	–1	–Std	–1	–Std	–1	–Std	
Single-ended	2.055	2.417	2.037	2.396	2.03	2.388	2.068	2.433	2.061	2.425	ns
Differential	2.192	2.58	2.434	2.864	2.425	2.852	2.164	2.545	2.156	2.536	ns

© 2026 Microchip Technology Inc. and its subsidiaries

TABLE 3-114: DDR1/SSTL2 CLASS I TRANSMITTER CHARACTERISTICS FOR MSIOD I/O BANK (OUTPUT AND TRISTATE BUFFERS)

	T_{DP}		T_{ZL}		T_{ZH}		T_{HZ}		T_{LZ}		Unit
	–1	–Std	–1	–Std	–1	–Std	–1	–Std	–1	–Std	
Single-ended	1.512	1.779	1.462	1.72	1.462	1.72	1.676	1.972	1.676	1.971	ns
Differential	1.676	1.971	1.774	2.087	1.766	2.077	1.854	2.181	1.845	2.171	ns

TABLE 3-115: DDR1/SSTL2 CLASS II TRANSMITTER CHARACTERISTICS FOR DDRIO I/O BANK (OUTPUT AND TRISTATE BUFFERS)

	T_{DP}		T_{ZL}		T_{ZH}		T_{HZ}		T_{LZ}		Unit
	–1	–Std	–1	–Std	–1	–Std	–1	–Std	–1	–Std	
Single-ended	2.122	2.497	1.906	2.243	1.902	2.237	2.061	2.424	2.056	2.418	ns
Differential	2.127	2.501	2.042	2.402	2.043	2.403	2.363	2.78	2.365	2.781	ns

TABLE 3-116: DDR1/SSTL2 CLASS II TRANSMITTER CHARACTERISTICS FOR MSIO I/O BANK (OUTPUT AND TRISTATE BUFFERS)

	T_{DP}		T_{ZL}		T_{ZH}		T_{HZ}		T_{LZ}		Unit
	–1	–Std	–1	–Std	–1	–Std	–1	–Std	–1	–Std	
Single-ended	2.29	2.693	1.988	2.338	1.978	2.326	1.989	2.34	1.979	2.328	ns
Differential	2.418	2.846	2.304	2.711	2.297	2.702	2.131	2.506	2.124	2.499	ns

3.6.4 STUB-SERIES TERMINATED LOGIC 1.8V (SSTL18)

SSTL18 Class I and Class II are supported in IGLOO 2 and SmartFusion 2 SoC FPGAs, and comply with the reduced and full drive double date rate (DDR2) standard. IGLOO 2 and SmartFusion 2 SoC FPGA I/Os support both standards for single-ended signaling and differential signaling for SSTL18. This standard requires a differential amplifier input buffer and a push-pull output buffer.

Minimum and Maximum DC/AC Input and Output Levels Specification

TABLE 3-117: SSTL18 DC RECOMMENDED DC OPERATING CONDITIONS

Parameter	Symbol	Min.	Typ.	Max.	Unit
Supply voltage	V_{DDI}	1.71	1.8	1.89	V
Termination voltage	V_{TT}	0.838	0.900	0.964	V
Input reference voltage	V_{REF}	0.838	0.900	0.964	V

TABLE 3-118: SSTL18 DC INPUT VOLTAGE SPECIFICATION

Parameter	Symbol	Min.	Max.	Unit
DC input logic high	V_{IH} (DC)	V_{REF} + 0.125	1.89	V
DC input logic low	V_{IL} (DC)	–0.3	V_{REF} – 0.125	V
Input current high[1]	I_{IH} (DC)	—	—	—
Input current low[1]	I_{IL} (DC)	—	—	—

1 See Table 3-22.

TABLE 3-119: SSTL18 DC OUTPUT VOLTAGE SPECIFICATION

Parameter	Symbol	Min.	Max.	Unit
SSTL18 Class I (DDR2 Reduced Drive)				
DC output logic high	V_{OH}	V_{TT} + 0.603	—	V
DC output logic low	V_{OL}		V_{TT}– 0.603	V

TABLE 3-119: SSTL18 DC OUTPUT VOLTAGE SPECIFICATION (CONTINUED)

Parameter	Symbol	Min.	Max.	Unit
Output minimum source DC current (DDRIO I/O bank only)	I_{OH} at V_{OH}	6.5	—	mA
Output minimum sink current (DDRIO I/O bank only)	I_{OL} at V_{OL}	–6.5	—	mA
SSTL18 Class II (DDR2 Full Drive)[1]				
DC output logic high	V_{OH}	V_{TT} + 0.603	—	V
DC output logic low	V_{OL}		V_{TT}– 0.603	V
Output minimum source DC current (DDRIO I/O bank only)	I_{OH} at V_{OH}	13.4	—	mA
Output minimum sink current (DDRIO I/O bank only)	I_{OL} at V_{OL}	–13.4	—	mA

1 To meet JEDEC Electrical Compliance, use DDR2 Full Drive Transmitter.

TABLE 3-120: SSTL18 DC DIFFERENTIAL VOLTAGE SPECIFICATION

Parameter	Symbol	Min.	Unit
DC input differential voltage	V_{ID} (DC)	0.3	V

TABLE 3-121: SSTL18 AC DIFFERENTIAL VOLTAGE SPECIFICATIONS (APPLICABLE TO DDRIO BANK ONLY)

Parameter	Symbol	Min.	Max.	Unit
AC input differential voltage	V_{DIFF} (AC)	0.5	—	V
AC differential cross point voltage	V_x (AC)	0.5 × V_{DDI} – 0.175	0.5 × V_{DDI} + 0.175	V

TABLE 3-122: SSTL18 MINIMUM AND MAXIMUM AC SWITCHING SPEED (APPLICABLE TO DDRIO BANK ONLY)

Parameter	Symbol	Max.	Unit	Conditions
Maximum data rate (for DDRIO I/O bank)	D_{MAX}	667	Mbps	AC loading: per JEDEC specification

TABLE 3-123: SSTL18 AC IMPEDANCE SPECIFICATIONS (APPLICABLE TO DDRIO BANK ONLY)

Parameter	Symbol	Typ.	Unit	Conditions
Supported output driver calibrated impedance (for DDRIO I/O bank)	R_{REF}	20, 42	Ω	Reference resistor = 150Ω
Effective impedance value (ODT)	R_{TT}	50, 75, 150	Ω	Reference resistor = 150Ω

TABLE 3-124: SSTL18 AC TEST PARAMETER SPECIFICATIONS (APPLICABLE TO DDRIO BANK ONLY)

Parameter	Symbol	Typ.	Unit
Measuring/trip point for data path	V_{TRIP}	0.9	V
Resistance for enable path (T_{ZH}, T_{ZL}, T_{HZ}, T_{LZ})	R_{ENT}	2K	Ω
Capacitive loading for enable path (T_{ZH}, T_{ZL}, T_{HZ}, T_{LZ})	C_{ENT}	5	pF
Reference resistance for data test path for SSTL18 Class I (T_{DP})	RTT_TEST	50	Ω
Reference resistance for data test path for SSTL18 Class II (T_{DP})	RTT_TEST	25	Ω
Capacitive loading for data path (T_{DP})	C_{LOAD}	5	pF

AC Switching Characteristics

© 2026 Microchip Technology Inc. and its subsidiaries

Worst commercial-case conditions: T_J = 85 °C, V_{DD} = 1.14V, and V_{DDI} = 1.71V.

TABLE 3-125: DDR2/SSTL18 RECEIVER CHARACTERISTICS FOR DDRIO I/O BANK WITH FIXED CODE

	On-Die Termination (ODT)	T_{PY}		Unit
		–1	–Std	
Pseudo differential	None	1.567	1.844	ns
True differential	None	1.588	1.869	ns

TABLE 3-126: DDR2/SSTL18 TRANSMITTER CHARACTERISTICS (OUTPUT AND TRISTATE BUFFERS)

	T_{DP}		T_{ZL}		T_{ZH}		T_{HZ}		T_{LZ}		Unit
	–1	–Std	–1	–Std	–1	–Std	–1	–Std	–1	–Std	
SSTL18 Class I (for DDRIO I/O Bank)											
Single-ended	2.383	2.804	2.23	2.623	2.229	2.622	2.202	2.591	2.201	2.59	ns
Differential	2.413	2.84	2.797	3.29	2.797	3.29	2.282	2.685	2.282	2.685	ns
SSTL18 Class II (for DDRIO I/O Bank)											
Single-ended	2.281	2.683	2.196	2.584	2.195	2.583	2.171	2.555	2.17	2.554	ns
Differential	2.315	2.724	2.698	3.173	2.698	3.173	2.242	2.639	2.242	2.639	ns

3.6.5 STUB-SERIES TERMINATED LOGIC 1.5V (SSTL15)

SSTL15 Class I and Class II are supported in IGLOO 2 FPGAs and SmartFusion 2 SoC FPGAs, and also comply with the reduced and full drive double data rate (DDR3) standard. IGLOO 2 FPGA and SmartFusion 2 SoC FPGA I/Os supports both standards for single-ended signaling and differential signaling for SSTL18. This standard requires a differential amplifier input buffer and a push-pull output buffer.

Minimum and Maximum DC/AC Input and Output Levels Specification

The following table lists the SSTL15 DC voltage specifications for DDRIO bank.

TABLE 3-127: SSTL15 DC RECOMMENDED DC OPERATING CONDITIONS (FOR DDRIO I/O BANK ONLY)

Parameter	Symbol	Min.	Typ.	Max.	Unit
Supply voltage	V_{DDI}	1.425	1.5	1.575	V
Termination voltage	V_{TT}	0.698	0.750	0.803	V
Input reference voltage	V_{REF}	0.698	0.750	0.803	V

TABLE 3-128: SSTL15 DC INPUT VOLTAGE SPECIFICATION (FOR DDRIO I/O BANK ONLY)

Parameter	Symbol	Min.	Max.	Unit
DC input logic high	V_{IH}(DC)	V_{REF} + 0.1	1.575	V
DC input logic low	V_{IL}(DC)	–0.3	V_{REF} – 0.1	V
Input current high[1]	I_{IH} (DC)	—	—	—
Input current low[1]	I_{IL} (DC)	—	—	—

1 See Table 3-22.

TABLE 3-129: SSTL15 DC OUTPUT VOLTAGE SPECIFICATION (FOR DDRIO I/O BANK ONLY)

Parameter	Symbol	Min.	Max.	Unit
DDR3/SSTL15 Class I (DDR3 Reduced Drive)				

TABLE 3-129: SSTL15 DC OUTPUT VOLTAGE SPECIFICATION (FOR DDRIO I/O BANK ONLY)

Parameter	Symbol	Min.	Max.	Unit
DC output logic high	V_{OH}	0.8 × V_{DDI}	—	V
DC output logic low	V_{OL}		0.2 × V_{DDI}	V
Output minimum source DC current	I_{OH} at V_{OH}	6.5	—	mA
Output minimum sink current	I_{OL} at V_{OL}	–6.5	—	mA
DDR3/SSTL15 Class II (DDR3 Full Drive)				
DC output logic high	V_{OH}	0.8 × V_{DDI}	—	V
DC output logic low	V_{OL}		0.2 × V_{DDI}	V
Output minimum source DC current	I_{OH} at V_{OH}	7.6	—	mA
Output minimum sink current	I_{OL} at V_{OL}	–7.6	—	mA

TABLE 3-130: SSTL15 DC DIFFERENTIAL VOLTAGE SPECIFICATION (FOR DDRIO I/O BANK ONLY)

Parameter	Symbol	Min.	Unit
DC input differential voltage	V_{ID}	0.2	V

Note: To meet JEDEC electrical compliance, use DDR3 full drive transmitter.

TABLE 3-131: SSTL15 AC SSTL15 MINIMUM AND MAXIMUM AC SWITCHING SPEED (FOR DDRIO I/O BANK ONLY)

Parameter	Symbol	Min.	Max.	Unit
AC input differential voltage	V_{DIFF} (AC)	0.3	—	V
AC differential cross point voltage	V_x (AC)	0.5 × V_{DDI} – 0.150	0.5 × V_{DDI} + 0.150	V

TABLE 3-132: SSTL15 MINIMUM AND MAXIMUM AC SWITCHING SPEED (FOR DDRIO I/O BANK ONLY)

Parameter	Symbol	Max.	Unit	Conditions
Maximum data rate	D_{MAX}	667	Mbps	AC loading: per JEDEC specifications

TABLE 3-133: SSTL15 AC CALIBRATED IMPEDANCE OPTION (FOR DDRIO I/O BANK ONLY)

Parameter	Symbol	Typ.	Unit	Conditions
Supported output driver calibrated impedance	R_{REF}	34, 40	Ω	Reference resistor = 240Ω
Effective impedance value (ODT)	R_{TT}	20, 30, 40, 60, 120	Ω	Reference resistor = 240Ω

TABLE 3-134: SSTL15 AC TEST PARAMETER SPECIFICATIONS (FOR DDRIO I/O BANK ONLY)

Parameter	Symbol	Typ.	Unit
Measuring/trip point for data path	V_{TRIP}	0.75	V
Resistance for enable path (T_{ZH}, T_{ZL}, T_{HZ}, T_{LZ})	R_{ENT}	2K	Ω
Capacitive loading for enable path (T_{ZH}, T_{ZL}, T_{HZ}, T_{LZ})	C_{ENT}	5	pF
Reference resistance for data test path for SSTL15 Class I (T_{DP})	RTT_TEST	50	Ω
Reference resistance for data test path for SSTL15 Class II (T_{DP})	RTT_TEST	25	Ω
Capacitive loading for data path (T_{DP})	C_{LOAD}	5	pF

© 2026 Microchip Technology Inc. and its subsidiaries

AC Switching Characteristics

Worst commercial-case conditions: TJ = 85 °C, V_{DD} = 1.14V, and V_{DDI} = 1.425V.

TABLE 3-135: DDR3/SSTL15 RECEIVER CHARACTERISTICS FOR DDRIO I/O BANK—WITH CALIBRATION ONLY

On-Die Termination (ODT)		T_{PY}		Unit
		–1	–Std	
Pseudo differential	None	1.605	1.888	ns
	20	1.616	1.901	ns
	30	1.613	1.897	ns
	40	1.611	1.895	ns
	60	1.609	1.893	ns
	120	1.607	1.89	ns
True differential	None	1.623	1.91	ns
	20	1.637	1.926	ns
	30	1.63	1.918	ns
	40	1.626	1.914	ns
	60	1.622	1.91	ns
	120	1.619	1.905	ns

TABLE 3-136: DDR3/SSTL15 TRANSMITTER CHARACTERISTICS (OUTPUT AND TRISTATE BUFFERS)

	T_{DP}		T_{ZL}		T_{ZH}		T_{HZ}		T_{LZ}		Unit
	–1	–Std	–1	–Std	–1	–Std	–1	–Std	–1	–Std	
DDR3 Reduced Drive/SSTL15 Class I (for DDRIO I/O Bank)											
Single-ended	2.533	2.98	2.522	2.967	2.523	2.968	2.427	2.855	2.428	2.856	ns
Differential	2.555	3.005	3.073	3.615	3.073	3.615	2.416	2.843	2.416	2.843	ns
DDR3 Full Drive/SSTL15 Class II (for DDRIO I/O Bank)											
Single-ended	2.53	2.977	2.514	2.958	2.516	2.96	2.422	2.849	2.425	2.852	ns
Differential	2.552	3.002	2.591	3.048	2.59	3.047	2.882	3.391	2.881	3.39	ns

3.6.6 LOW POWER DOUBLE DATA RATE (LPDDR)

LPDDR reduced and full drive low power double data rate standards are supported in IGLOO 2 FPGA and SmartFusion 2 SoC FPGA I/Os. This standard requires a differential amplifier input buffer and a push-pull output buffer.

Minimum and Maximum DC/AC Input and Output Levels Specification

TABLE 3-137: LPDDR DC RECOMMENDED DC OPERATING CONDITIONS

Parameter	Symbol	Min.	Typ.	Max.
Supply voltage	V_{DDI}	1.71	1.8	1.89
Termination voltage	V_{TT}	0.838	0.900	0.964
Input reference voltage	V_{REF}	0.838	0.900	0.964

TABLE 3-138: LPDDR DC INPUT VOLTAGE SPECIFICATION

Parameter	Symbol	Min.	Max.
DC input logic high	V_{IH} (DC)	0.7 × V_{DDI}	1.89

TABLE 3-138: LPDDR DC INPUT VOLTAGE SPECIFICATION (CONTINUED)

Parameter	Symbol	Min.	Max.
DC input logic low	V_{IL} (DC)	–0.3	0.3 × V_{DDI}
Input current high[1]	I_{IH} (DC)	—	—
Input current low[1]	I_{IL} (DC)	—	—

1 See Table 3-22.

TABLE 3-139: LPDDR DC OUTPUT VOLTAGE SPECIFICATION REDUCED DRIVE

Parameter	Symbol	Min.	Max.
DC output logic high	V_{OH}	0.9 × V_{DDI}	—
DC output logic low	V_{OL}	—	0.1 × V_{DDI}
Output minimum source DC current	I_{OH} at V_{OH}	0.1	—
Output minimum sink current	I_{OL} at V_{OL}	–0.1	—

TABLE 3-140: LPDDR DC OUTPUT VOLTAGE SPECIFICATION FULL DRIVE[1]

Parameter	Symbol	Min.	Max.
DC output logic high	V_{OH}	0.9 × V_{DDI}	—
DC output logic low	V_{OL}	—	0.1 × V_{DDI}
Output minimum source DC current	I_{OH} at V_{OH}	0.1	—
Output minimum sink current	I_{OL} at V_{OL}	–0.1	—

1 To meet JEDEC Electrical Compliance, use LPDDR Full Drive Transmitter.

TABLE 3-141: LPDDR DC DIFFERENTIAL VOLTAGE SPECIFICATION

Parameter	Symbol	Min.
DC input differential voltage	V_{ID} (DC)	0.4 × V_{DDI}

TABLE 3-142: LPDDR AC DIFFERENTIAL VOLTAGE SPECIFICATIONS (FOR DDRIO I/O BANK ONLY)

Parameter	Symbol	Min.	Max.	Unit
AC input differential voltage	V_{DIFF}	0.6 × V_{DDI}	—	V
AC differential cross point voltage	V_x	0.4 × V_{DDI}	0.6 × V_{DDI}	V

TABLE 3-143: LPDDR AC SPECIFICATIONS (FOR DDRIO I/O BANK ONLY)

Parameter	Symbol	Max.	Unit	Conditions
Maximum data rate	D_{MAX}	400	Mbps	AC loading: per JEDEC specifications

TABLE 3-144: LPDDR AC CALIBRATED IMPEDANCE OPTION (FOR DDRIO I/O BANK ONLY)

Parameter	Symbol	Typ.	Unit	Conditions
Supported output driver calibrated impedance	R_{REF}	20, 42	Ω	Reference resistor = 150Ω
Effective impedance value (ODT)	R_{TT}	50, 70, 150	Ω	Reference resistor = 150Ω

TABLE 3-145: LPDDR AC TEST PARAMETER SPECIFICATIONS (FOR DDRIO I/O BANK ONLY)

Parameter	Symbol	Typ.	Unit
Measuring/trip point for data path	V_{TRIP}	0.9	V

© 2026 Microchip Technology Inc. and its subsidiaries

TABLE 3-145: LPDDR AC TEST PARAMETER SPECIFICATIONS (FOR DDRIO I/O BANK ONLY)

Resistance for enable path (T_{ZH}, T_{ZL}, T_{HZ}, T_{LZ})	R_{ENT}	2K	Ω
Capacitive loading for enable path (T_{ZH}, T_{ZL}, T_{HZ}, T_{LZ})	C_{ENT}	5	pF
Reference resistance for data test path for LPDDR (T_{DP})	RTT_TEST	50	Ω
Capacitive loading for data path (T_{DP})	C_{LOAD}	5	Ω

AC Switching Characteristics

Worst-case commercial conditions: T_J = 85 °C, V_{DD} = 1.14 V, and worst-case V_{DDI}.

TABLE 3-146: LPDDR RECEIVER CHARACTERISTICS FOR DDRIO I/O BANK WITH FIXED CODES

	On-Die Termination (ODT)	T_{PY}		Unit
		–1	–Std	
Pseudo differential	None	1.568	1.845	ns
True differential	None	1.588	1.869	ns

TABLE 3-147: LPDDR REDUCED DRIVE FOR DDRIO I/O BANK (OUTPUT AND TRISTATE BUFFERS)

	T_{DP}		T_{ENZL}		T_{ENZH}		T_{ENHZ}		T_{ENLZ}		Unit
	–1	–Std	–1	–Std	–1	–Std	–1	–Std	–1	–Std	
Single-ended	2.383	2.804	2.23	2.623	2.229	2.622	2.202	2.591	2.201	2.59	ns
Differential	2.396	2.819	2.764	3.252	2.764	3.252	2.255	2.653	2.255	2.653	ns

TABLE 3-148: LPDDR FULL DRIVE FOR DDRIO I/O BANK (OUTPUT AND TRISTATE BUFFERS)

	T_{DP}		T_{ENZL}		T_{ENZH}		T_{ENHZ}		T_{ENLZ}		Unit
	–1	–Std	–1	–Std	–1	–Std	–1	–Std	–1	–Std	
Single-ended	2.281	2.683	2.196	2.584	2.195	2.583	2.171	2.555	2.17	2.554	ns
Differential	2.298	2.703	2.288	2.692	2.288	2.692	2.593	3.051	2.593	3.051	ns

Minimum and Maximum DC/AC Input and Output Levels Specification using LPDDR-LVCMOS 1.8V Mode

TABLE 3-149: LPDDR-LVCMOS 1.8V MODE RECOMMENDED DC OPERATING CONDITIONS

Parameter	Symbol	Min.	Typ.	Max.	Unit
Supply voltage	V_{DDI}	1.710	1.8	1.89	V

TABLE 3-150: LPDDR-LVCMOS 1.8V MODE DC INPUT VOLTAGE SPECIFICATION

Parameter	Symbol	Min.	Max.	Unit
DC input logic high (for MSIOD and DDRIO I/O banks)	V_{IH} (DC)	0.65 × V_{DDI}	1.89	V
DC input logic high (for MSIO I/O bank)	V_{IH} (DC)	0.65 × V_{DDI}	3.45	V
DC input logic low	V_{IL} (DC)	–0.3	0.35 × V_{DDI}	V
Input current high[1]	I_{IH} (DC)	—	—	—
Input current low[1]	I_{IL} (DC)	—	—	—

1 See Table 3-22.

TABLE 3-151: LPDDR-LVCMOS 1.8V MODE DC OUTPUT VOLTAGE SPECIFICATION

Parameter	Symbol	Min.	Max.	Unit

TABLE 3-151: LPDDR-LVCMOS 1.8V MODE DC OUTPUT VOLTAGE SPECIFICATION

DC output logic high	V_{OH}	V_{DDI} – 0.45	—	V
DC output logic low	V_{OL}	—	0.45	V

TABLE 3-152: LPDDR-LVCMOS 1.8V MINIMUM AND MAXIMUM AC SWITCHING SPEEDS

Parameter	Symbol	Max.	Unit	Conditions
Maximum data rate (for DDRIO I/O bank)	D_{MAX}	400	Mbps	AC loading: 17pf load, 8 ma drive and above/all slew

TABLE 3-153: LPDDR-LVCMOS 1.8V CALIBRATED IMPEDANCE OPTION

Parameter	Symbol	Typ.	Unit
Supported output driver calibrated impedance (for DDRIO I/O bank)	RODT_CAL	75, 60, 50, 33, 25, 20	Ω

TABLE 3-154: LPDDR-LVCMOS 1.8V AC TEST PARAMETER SPECIFICATIONS

Parameter	Symbol	Typ.	Unit
Measuring/trip point for data path	V_{TRIP}	0.9	V
Resistance for enable path (T_{ZH}, T_{ZL}, T_{HZ}, T_{LZ})	R_{ENT}	2K	Ω
Capacitive loading for enable path (T_{ZH}, T_{ZL}, T_{HZ}, T_{LZ})	C_{ENT}	5	pF
Capacitive loading for data path (T_{DP})	C_{LOAD}	5	pF

TABLE 3-155: LPDDR-LVCMOS 1.8V MODE TRANSMITTER DRIVE STRENGTH SPECIFICATION FOR DDRIO BANK

Output Drive Selection	V_{OH} (V) Min.	V_{OL} (V) Max.	I_{OH} (at V_{OH}) mA	I_{OL} (at V_{OL}) mA
2 mA	V_{DDI} – 0.45	0.45	2	2
4 mA	V_{DDI} – 0.45	0.45	4	4
6 mA	V_{DDI} – 0.45	0.45	6	6
8 mA	V_{DDI} – 0.45	0.45	8	8
10 mA	V_{DDI} – 0.45	0.45	10	10
12 mA	V_{DDI} – 0.45	0.45	12	12
16 mA[1]	V_{DDI} – 0.45	0.45	16	16

1 16 mA Drive Strengths, All Slews, meet LPDDR JEDEC electrical compliance.

TABLE 3-156: LPDDR-LVCMOS 1.8V AC SWITCHING CHARACTERISTICS FOR RECEIVER (FOR DDRIO I/O BANK WITH FIXED CODE—INPUT BUFFERS)

ODT (On Die Termination)	–1	–Std	–1	–Std	Unit
None	1.968	2.315	2.099	2.47	ns

TABLE 3-157: LPDDR-LVCMOS 1.8V AC SWITCHING CHARACTERISTICS FOR TRANSMITTER FOR DDRIO I/O BANK (OUTPUT AND TRISTATE BUFFERS)

Output Drive Selection	Slew Control	T_{DP}		T_{ZL}		T_{ZH}		T_{HZ}[1]		T_{LZ}[1]		Unit
		–1	–Std	–1	–Std	–1	–Std	–1	–Std	–1	–Std	
2 mA	slow	4.234	4.981	3.646	4.29	4.245	4.995	4.908	5.774	4.434	5.216	ns
	medium	3.824	4.498	3.282	3.861	3.834	4.511	4.625	5.441	4.116	4.843	ns
	medium_fast	3.627	4.267	3.111	3.66	3.637	4.279	4.481	5.272	3.984	4.687	ns

© 2026 Microchip Technology Inc. and its subsidiaries

TABLE 3-157: LPDDR-LVCMOS 1.8V AC SWITCHING CHARACTERISTICS FOR TRANSMITTER FOR DDRIO I/O BANK (OUTPUT AND TRISTATE BUFFERS) (CONTINUED)

	fast	3.605	4.241	3.097	3.644	3.615	4.253	4.472	5.262	3.973	4.674	ns
4 mA	slow	3.923	4.615	3.314	3.9	3.918	4.61	5.403	6.356	4.894	5.757	ns
	medium	3.518	4.138	2.961	3.484	3.515	4.135	5.121	6.025	4.561	5.366	ns
	medium_fast	3.321	3.907	2.783	3.275	3.317	3.903	4.966	5.843	4.426	5.206	ns
	fast	3.301	3.883	2.77	3.259	3.296	3.878	4.957	5.831	4.417	5.196	ns
6 mA	slow	3.71	4.364	3.104	3.652	3.702	4.355	5.62	6.612	5.08	5.977	ns
	medium	3.333	3.921	2.779	3.27	3.325	3.913	5.346	6.289	4.777	5.62	ns
	medium_fast	3.155	3.712	2.62	3.083	3.146	3.702	5.21	6.13	4.657	5.479	ns
	fast	3.134	3.688	2.608	3.068	3.125	3.677	5.202	6.12	4.648	5.468	ns
8 mA	slow	3.619	4.258	3.007	3.538	3.607	4.244	5.815	6.841	5.249	6.175	ns
	medium	3.246	3.819	2.686	3.16	3.236	3.807	5.542	6.52	4.936	5.807	ns
	medium_fast	3.066	3.607	2.525	2.971	3.054	3.593	5.405	6.359	4.811	5.66	ns
	fast	3.046	3.584	2.513	2.957	3.034	3.57	5.401	6.353	4.803	5.651	ns
10 mA	slow	3.498	4.115	2.878	3.386	3.481	4.096	6.046	7.113	5.444	6.404	ns
	medium	3.138	3.692	2.569	3.023	3.126	3.678	5.782	6.803	5.129	6.034	ns
	medium_fast	2.966	3.489	2.414	2.841	2.951	3.472	5.666	6.665	5.013	5.897	ns
	fast	2.945	3.464	2.401	2.826	2.93	3.448	5.659	6.658	5.003	5.886	ns
12 mA	slow	3.417	4.02	2.807	3.303	3.401	4.002	6.083	7.156	5.464	6.428	ns
	medium	3.076	3.618	2.519	2.964	3.063	3.604	5.828	6.856	5.176	6.089	ns
	medium_fast	2.913	3.427	2.376	2.795	2.898	3.41	5.725	6.736	5.072	5.966	ns
	fast	2.894	3.405	2.362	2.78	2.879	3.388	5.715	6.724	5.064	5.957	ns
16 mA	slow	3.366	3.96	2.751	3.237	3.348	3.939	6.226	7.324	5.576	6.56	ns
	medium	3.03	3.565	2.47	2.906	3.017	3.55	5.981	7.036	5.282	6.214	ns
	medium_fast	2.87	3.377	2.328	2.739	2.854	3.358	5.895	6.935	5.18	6.094	ns
	fast	2.853	3.357	2.314	2.723	2.837	3.338	5.889	6.929	5.177	6.09	ns

1 Delay increases with drive strength are inherent to built-in slew control circuitry for SSO management).

3.7 Differential I/O Standards

Configuration of the I/O modules as a differential pair is handled by Microchip FPGA Products Group Libero software when the user instantiates a differential I/O macro in the design. Differential I/Os can also be used in conjunction with the embedded Input Register (InReg), Output Register (OutReg), Enable Register (EnReg), and Double Data Rate (DDR) registers.

3.7.1 LVDS

Low-Voltage Differential Signaling (ANSI/TIA/EIA-644) is a high-speed, differential I/O standard.

Minimum and Maximum Input and Output Levels

TABLE 3-158: LVDS RECOMMENDED DC OPERATING CONDITIONS

Parameter	Symbol	Min.	Typ.	Max.	Unit	Conditions
Supply voltage	V_{DDI}	2.375	2.5	2.625	V	2.5V range
Supply voltage	V_{DDI}	3.15	3.3	3.45	V	3.3V range

TABLE 3-159: LVDS DC INPUT VOLTAGE SPECIFICATION

Parameter	Symbol	Min.	Max.	Unit	Conditions
DC Input voltage	V_I	0	2.925	V	2.5V range

TABLE 3-159: LVDS DC INPUT VOLTAGE SPECIFICATION (CONTINUED)

DC input voltage	V_I	0	3.45	V	3.3V range
Input current high[1]	I_{IH} (DC)	—	—	—	—
Input current low[1]	I_{IL} (DC)	—	—	—	—

1 See Table 3-22.

TABLE 3-160: LVDS DC OUTPUT VOLTAGE SPECIFICATION

Parameter	Symbol	Min.	Typ.	Max.	Unit
DC output logic high	V_{OH}	1.25	1.425	1.6	V
DC output logic low	V_{OL}	0.9	1.075	1.25	V

TABLE 3-161: LVDS DC DIFFERENTIAL VOLTAGE SPECIFICATION[1]

Parameter	Symbol	Min.	Typ.	Max.	Unit
Differential output voltage swing	V_{OD}	250	350	450	mV
Output common mode voltage	V_{OCM}	1.125	1.25	1.375	V
Input common mode voltage	V_{ICM}	0.05	1.25	2.35	V
Input differential voltage	V_{ID}	100	350	600	mV

1 when V_{ID} is < 300 mV, the input signal is delayed by up to an additional 450 ps for LVDS25 and 280 ps for LVDS33. This delay is not accounted in the timing model. Clock insertion delays, propagation delays, and I/O to FF delays are marginally affected. Adding a parallel termination resistor of 200Ω ±5% across the receiver pins can mitigate this additional delay when V_{ID} is < 300 mV.

TABLE 3-162: LVDS MINIMUM AND MAXIMUM AC SWITCHING SPEED

Parameter	Symbol	Max.	Unit	Conditions
Maximum data rate (for MSIO I/O bank)	D_{MAX}	535	Mbps	AC loading: 12 pF/100Ω differential load
Maximum data rate (for MSIOD I/O bank) no pre-emphasis	D_{MAX}	620	Mbps	AC loading: 10 pF/100Ω differential load
		700	Mbps	AC loading: 2 pF/100Ω differential load

TABLE 3-163: LVDS AC IMPEDANCE SPECIFICATIONS

Parameter	Symbol	Typ.	Max.	Unit
Termination resistance	RT	100		Ω

TABLE 3-164: LVDS AC TEST PARAMETER SPECIFICATIONS

Parameter	Symbol	Typ.	Unit
Measuring/trip point for data path	V_{TRIP}	Cross point	V
Resistance for enable path (T_{ZH}, T_{ZL}, T_{HZ}, T_{LZ})	R_{ENT}	2K	Ω
Capacitive loading for enable path (T_{ZH}, T_{ZL}, T_{HZ}, T_{LZ})	C_{ENT}	5	pF

LVDS25 AC Switching Characteristics

Worst commercial-case conditions: T_J = 85 °C, V_{DD} = 1.14V, and V_{DDI} = 2.375V.

TABLE 3-165: LVDS25 RECEIVER CHARACTERISTICS FOR MSIO I/O BANK (INPUT BUFFERS)

On-Die Termination (ODT)	T_{PY}		Unit
	–1	–Std	
None	2.774	3.263	ns
100	2.775	3.264	ns

© 2026 Microchip Technology Inc. and its subsidiaries

TABLE 3-166: LVDS25 RECEIVER CHARACTERISTICS FOR MSIOD I/O BANK (INPUT BUFFERS)

On-Die Termination (ODT)	T_{PY}		Unit
	–1	–Std	
None	2.554	3.004	ns
100	2.549	2.999	ns

TABLE 3-167: LVDS25 TRANSMITTER CHARACTERISTICS FOR MSIO I/O BANK (OUTPUT AND TRISTATE BUFFERS)

T_{DP}		T_{ZL}		T_{ZH}		T_{HZ}		T_{LZ}		Unit
–1	–Std	–1	–Std	–1	–Std	–1	–Std	–1	–Std	
2.136	2.513	2.416	2.842	2.402	2.825	2.423	2.85	2.409	2.833	ns

TABLE 3-168: LVDS25 TRANSMITTER CHARACTERISTICS FOR MSIOD I/O BANK (OUTPUT AND TRISTATE BUFFERS)

	T_{DP}		T_{ZL}		T_{ZH}		T_{HZ}		T_{LZ}		Unit
	–1	–Std	–1	–Std	–1	–Std	–1	–Std	–1	–Std	
No pre-emphasis	1.61	1.893	1.749	2.058	1.735	2.041	1.897	2.231	1.866	2.195	ns
Min pre-emphasis	1.527	1.796	1.757	2.067	1.744	2.052	1.905	2.241	1.876	2.207	ns
Med pre-emphasis	1.496	1.76	1.765	2.077	1.751	2.06	1.914	2.252	1.884	2.216	ns

LVDS33 AC Switching Characteristics

TABLE 3-169: LVDS33 RECEIVER CHARACTERISTICS FOR MSIO I/O BANK (INPUT BUFFERS)

On Die Termination (ODT)	T_{PY}		Unit
	–1	–Std	
None	2.572	3.025	ns
100	2.569	3.023	ns

TABLE 3-170: LVDS33 TRANSMITTER CHARACTERISTICS FOR MSIO I/O BANK (OUTPUT AND TRISTATE BUFFERS)

T_{DP}		T_{ZL}		T_{ZH}		T_{HZ}		T_{LZ}		Unit
–1	–Std	–1	–Std	–1	–Std	–1	–Std	–1	–Std	
1.942	2.284	1.98	2.33	1.97	2.318	1.953	2.298	1.96	2.307	ns

3.7.2 B-LVDS

Bus LVDS (B-LVDS) specifications extend the existing LVDS standard to high-performance multipoint bus applications. Multidrop and multipoint bus configurations may contain any combination of drivers, receivers, and transceivers.

Minimum and Maximum DC/AC Input and Output Levels Specification

TABLE 3-171: B-LVDS RECOMMENDED DC OPERATING CONDITIONS

Parameter	Symbol	Min.	Typ.	Max.	Unit
Supply voltage	V_{DDI}	2.375	2.5	2.625	V

TABLE 3-172: B-LVDS DC INPUT VOLTAGE SPECIFICATION

Parameter	Symbol	Min.	Max.	Unit
DC input voltage	V_I	0	2.925	V
Input current high[1]	I_{IH} (DC)	—	—	—

TABLE 3-172: B-LVDS DC INPUT VOLTAGE SPECIFICATION (CONTINUED)

Input current low[1]	I_{IL} (DC)	—	—	—

1 See Table 3-22.

TABLE 3-173: B-LVDS DC OUTPUT VOLTAGE SPECIFICATION (FOR MSIO I/O BANK ONLY)

Parameter	Symbol	Min.	Typ.	Max.	Unit
DC output logic high	V_{OH}	1.25	1.425	1.6	V
DC output logic low	V_{OL}	0.9	1.075	1.25	V

TABLE 3-174: B-LVDS DC DIFFERENTIAL VOLTAGE SPECIFICATION

Parameter	Symbol	Min.	Max.	Unit
Differential output voltage swing (for MSIO I/O bank only)	V_{OD}	65	460	mV
Output common mode voltage (for MSIO I/O bank only)	V_{OCM}	1.1	1.5	V
Input common mode voltage	V_{ICM}	0.05	2.4	V
Input differential voltage	V_{ID}	0.1	V_{DDI}	V

TABLE 3-175: B-LVDS MINIMUM AND MAXIMUM AC SWITCHING SPEED

Parameter	Symbol	Max.	Unit	Conditions
Maximum data rate (for MSIO I/O bank)	D_{MAX}	500	Mbps	AC loading: 2 pF/100Ω differential load

TABLE 3-176: B-LVDS AC IMPEDANCE SPECIFICATIONS

Parameter	Symbol	Typ	Unit
Termination resistance	R_T	27	Ω

TABLE 3-177: B-LVDS AC TEST PARAMETER SPECIFICATIONS

Parameter	Symbol	Typ.	Unit
Measuring/trip point for data path	V_{TRIP}	Cross point	V
Resistance for enable path (T_{ZH}, T_{ZL}, T_{HZ}, T_{LZ})	R_{ENT}	2K	Ω
Capacitive loading for enable path (T_{ZH}, T_{ZL}, T_{HZ}, T_{LZ})	C_{ENT}	5	pF

AC Switching Characteristics

Worst commercial-case conditions: T_J = 85 °C, V_{DD} = 1.14V, and V_{DDI} = 2.375V.

TABLE 3-178: B-LVDS AC SWITCHING CHARACTERISTICS FOR RECEIVER FOR MSIO I/O BANK (INPUT BUFFERS)

On-Die Termination (ODT)	T_{PY}		Unit
	–1	–Std	
None	2.738	3.221	ns
100	2.735	3.218	ns

TABLE 3-179: B-LVDS AC SWITCHING CHARACTERISTICS FOR RECEIVER FOR MSIOD I/O BANK (INPUT BUFFERS)

On-Die Termination (ODT)	T_{PY}		Unit
	–1	–Std	
None	2.495	2.934	ns
100	2.495	2.935	ns

© 2026 Microchip Technology Inc. and its subsidiaries

TABLE 3-180: B-LVDS AC SWITCHING CHARACTERISTICS FOR TRANSMITTER (FOR MSIO I/O BANK - OUTPUT AND TRISTATE BUFFERS)

T_{DP}		T_{ZL}		T_{ZH}		T_{HZ}		T_{LZ}		Unit
–1	–Std	–1	–Std	–1	–Std	–1	–Std	–1	–Std	
2.258	2.656	2.343	2.756	2.329	2.74	2.12	2.494	2.123	2.497	ns

3.7.3 M-LVDS

M-LVDS specifications extend the existing LVDS standard to high-performance multipoint bus applications. Multidrop and multipoint bus configurations may contain any combination of drivers, receivers, and transceivers.

Minimum and Maximum Input and Output Levels

TABLE 3-181: M-LVDS RECOMMENDED DC OPERATING CONDITIONS

Parameter	Symbol	Min.	Typ.	Max.	Unit
Supply voltage[1]	V_{DDI}	2.375	2.5	2.625	V

1 Only M-LVDS TYPE I is supported.

TABLE 3-182: M-LVDS DC INPUT VOLTAGE SPECIFICATION

Parameter	Symbol	Min.	Max.	Unit
DC input voltage	V_I	0	2.925	V
Input current high[1]	I_{IH} (DC)	—	—	—
Input current low[2]	I_{IL} (DC)	—	—	—

1 See Table 3-22.

TABLE 3-183: M-LVDS DC VOLTAGE SPECIFICATION OUTPUT VOLTAGE SPECIFICATION (FOR MSIO I/O BANK ONLY)

Parameter	Symbol	Min.	Typ.	Max.	Unit
DC output logic high	V_{OH}	1.25	1.425	1.6	V
DC output logic low	V_{OL}	0.9	1.075	1.25	V

TABLE 3-184: M-LVDS DIFFERENTIAL VOLTAGE SPECIFICATION

Parameter	Symbol	Min.	Max.	Unit
Differential output voltage swing (for MSIO I/O bank only)	V_{OD}	300	650	mV
Output common mode voltage (for MSIO I/O bank only)	V_{OCM}	0.3	2.1	V
Input common mode voltage	V_{ICM}	0.3	1.2	V
Input differential voltage	V_{ID}	50	2400	mV

TABLE 3-185: M-LVDS MINIMUM AND MAXIMUM AC SWITCHING SPEED FOR MSIO I/O BANK

Parameter	Symbol	Max.	Unit	Conditions
Maximum data rate	D_{MAX}	500	Mbps	AC loading: 2 pF/100Ω differential load

TABLE 3-186: M-LVDS AC IMPEDANCE SPECIFICATIONS

Parameter	Symbol	Typ.	Unit
Termination resistance	R_T	50	Ω

TABLE 3-187: M-LVDS AC TEST PARAMETER SPECIFICATIONS

Parameter	Symbol	Typ.	Unit
Measuring/trip point for data path	V_{TRIP}	Cross point	V
Resistance for enable path (T_{ZH}, T_{ZL}, T_{HZ}, T_{LZ})	R_{ENT}	2K	Ω
Capacitive loading for enable path (T_{ZH}, T_{ZL}, T_{HZ}, T_{LZ})	C_{ENT}	5	pF

AC Switching Characteristics

Worst commercial-case conditions: T_J = 85 °C, V_{DD} = 1.14 V, and V_{DDI} = 2.375V.

TABLE 3-188: M-LVDS AC SWITCHING CHARACTERISTICS FOR RECEIVER (FOR MSIO I/O BANK —INPUT BUFFERS)

On-Die Termination (ODT)	T_{PY}		Unit
	–1	–Std	
None	2.738	3.221	ns
100	2.735	3.218	ns

TABLE 3-189: M-LVDS AC SWITCHING CHARACTERISTICS FOR RECEIVER (FOR MSIOD I/O BANK—INPUT BUFFERS)

On-Die Termination (ODT)	T_{PY}		Unit
	–1	–Std	
None	2.495	2.934	ns
100	2.495	2.935	ns

TABLE 3-190: M-LVDS AC SWITCHING CHARACTERISTICS FOR TRANSMITTER (FOR MSIO I/O BANK—OUTPUT AND TRISTATE BUFFERS)

T_{DP}		T_{ZL}		T_{ZH}		T_{HZ}		T_{LZ}		Unit
–1	–Std	–1	–Std	–1	–Std	–1	–Std	–1	–Std	
2.258	2.656	2.348	2.762	2.334	2.746	2.123	2.497	2.125	2.5	ns

3.7.4 MINI-LVDS

Mini-LVDS is an unidirectional interface from the timing controller to the column drivers and is designed to the Texas Instruments Standard SLDA007A.

Mini-LVDS Minimum and Maximum Input and Output Levels

TABLE 3-191: MINI-LVDS RECOMMENDED DC OPERATING CONDITIONS

Parameter	Symbol	Min.	Typ.	Max.	Unit
Supply voltage	V_{DDI}	2.375	2.5	2.625	V

TABLE 3-192: MINI-LVDS DC INPUT VOLTAGE SPECIFICATION

Parameter	Symbol	Min.	Max.	Unit
DC Input voltage	V_I	0	2.925	V

TABLE 3-193: MINI-LVDS DC OUTPUT VOLTAGE SPECIFICATION

Parameter	Symbol	Min.	Typ.	Max.	Unit
DC output logic high	V_{OH}	1.25	1.425	1.6	V
DC output logic low	V_{OL}	0.9	1.075	1.25	V

© 2026 Microchip Technology Inc. and its subsidiaries

TABLE 3-194: MINI-LVDS DC DIFFERENTIAL VOLTAGE SPECIFICATION

Parameter	Symbol	Min.	Max.	Unit
Differential output voltage swing	V_{OD}	300	600	mV
Output common mode voltage	V_{OCM}	1	1.4	V
Input common mode voltage	V_{ICM}	0.3	1.2	V
Input differential voltage	V_{ID}	100	600	mV

TABLE 3-195: MINI-LVDS MINIMUM AND MAXIMUM AC SWITCHING SPEED

Parameter	Symbol	Max.	Unit	Conditions
Maximum data rate (for MSIO I/O bank)	D_{MAX}	520	Mbps	AC loading: 2 pF/100Ω differential load
Maximum data rate (for MSIOD I/O bank)	D_{MAX}	700	Mbps	AC loading: 2 pF/100Ω differential load

TABLE 3-196: MINI-LVDS AC IMPEDANCE SPECIFICATIONS

Parameter	Symbol	Typ.	Unit
Termination resistance	R_T	100	Ω

TABLE 3-197: MINI-LVDS AC TEST PARAMETER SPECIFICATIONS

Parameter	Symbol	Typ.	Unit
Measuring/trip point for data path	V_{TRIP}	Cross point	V
Resistance for enable path (T_{ZH}, T_{ZL}, T_{HZ}, T_{LZ})	R_{ENT}	2K	Ω
Capacitive loading for enable path (T_{ZH}, T_{ZL}, T_{HZ}, T_{LZ})	C_{ENT}	5	pF

AC Switching Characteristics

Worst commercial-case conditions: T_J = 85 °C, V_{DD} = 1.14V, and V_{DDI} = 2.375V.

TABLE 3-198: MINI-LVDS AC SWITCHING CHARACTERISTICS FOR RECEIVER (FOR MSIO I/O BANK—INPUT BUFFERS)

On-Die Termination (ODT)	T_{PY}		Unit
	–1	–Std	
None	2.855	3.359	ns
100	2.85	3.353	ns
None	2.602	3.061	ns
100	2.597	3.055	ns

TABLE 3-199: MINI-LVDS AC SWITCHING CHARACTERISTICS FOR TRANSMITTER FOR MSIO I/O BANK (OUTPUT AND TRISTATE BUFFERS)

T_{DP}		T_{ZL}		T_{ZH}		T_{HZ}		T_{LZ}		Unit
–1	–Std	–1	–Std	–1	–Std	–1	–Std	–1	–Std	
2.097	2.467	2.308	2.715	2.296	2.701	1.964	2.31	1.949	2.293	ns

TABLE 3-200: MINI-LVDS AC SWITCHING CHARACTERISTICS FOR TRANSMITTER (FOR MSIOD I/O BANK—OUTPUT AND TRISTATE BUFFERS)

	T_{DP}		T_{ZL}		T_{ZH}		T_{HZ}		T_{LZ}		Unit
	–1	–Std	–1	–Std	–1	–Std	–1	–Std	–1	–Std	

TABLE 3-200: MINI-LVDS AC SWITCHING CHARACTERISTICS FOR TRANSMITTER (FOR MSIOD I/O BANK—OUTPUT AND TRISTATE BUFFERS)

No pre-emphasis	1.614	1.899	1.562	1.837	1.553	1.826	1.593	1.874	1.578	1.856	ns
Min pre-emphasis	1.604	1.887	1.745	2.053	1.731	2.036	1.892	2.225	1.861	2.189	ns
Med pre-emphasis	1.521	1.79	1.753	2.062	1.737	2.043	1.9	2.235	1.868	2.197	ns
Max pre-emphasis	1.492	1.754	1.762	2.073	1.745	2.052	1.91	2.247	1.876	2.206	ns

3.7.5 RSDS

Reduced Swing Differential Signaling (RSDS) is similar to an LVDS high-speed interface using differential signaling. RSDS has a similar implementation to LVDS devices and is only intended for point-to-point applications.

Minimum and Maximum Input and Output Levels

TABLE 3-201: RSDS RECOMMENDED DC OPERATING CONDITIONS

Parameter	Symbol	Min.	Typ.	Max.	Unit
Supply voltage	V_{DDI}	2.375	2.5	2.625	V

TABLE 3-202: RSDS DC INPUT VOLTAGE SPECIFICATION

Parameter	Symbol	Min.	Max.	Unit
DC input voltage	V_I	0	2.925	V

TABLE 3-203: RSDS DC OUTPUT VOLTAGE SPECIFICATION

Parameter	Symbol	Min.	Typ.	Max.	Unit
DC output logic high	V_{OH}	1.25	1.425	1.6	V
DC output logic low	V_{OL}	0.9	1.075	1.25	V

TABLE 3-204: RSDS DIFFERENTIAL VOLTAGE SPECIFICATION

Parameter	Symbol	Min.	Max.	Unit
Differential output voltage swing	V_{OD}	100	600	mV
Output common mode voltage	V_{OCM}	0.5	1.5	V
Input common mode voltage	V_{ICM}	0.3	1.5	V
Input differential voltage	V_{ID}	100	600	mV

TABLE 3-205: RSDS MINIMUM AND MAXIMUM AC SWITCHING SPEED

Parameter	Symbol	Max.	Unit	Conditions
Maximum data rate (for MSIO I/O bank)	D_{MAX}	520	Mbps	AC loading: 2 pF/100Ω differential load
Maximum data rate (for MSIOD I/O bank)	D_{MAX}	700	Mbps	AC loading: 2 pF/100Ω differential load

TABLE 3-206: RSDS AC IMPEDANCE SPECIFICATIONS

Parameter	Symbol	Typ.	Unit
Termination resistance	RT	100	Ω

TABLE 3-207: RSDS AC TEST PARAMETER SPECIFICATIONS

Parameter	Symbol	Typ.	Unit
Measuring/trip point for data path	V_{TRIP}	Cross point	V
Resistance for enable path (T_{ZH}, T_{ZL}, T_{HZ}, T_{LZ})	R_{ENT}	2K	Ω
Capacitive loading for enable path (T_{ZH}, T_{ZL}, T_{HZ}, T_{LZ})	C_{ENT}	5	pF

© 2026 Microchip Technology Inc. and its subsidiaries

AC Switching Characteristics

Worst commercial-case conditions: T_J = 85 °C, V_{DD} = 1.14V, and V_{DDI} = 2.375V.

TABLE 3-208: RSDS AC SWITCHING CHARACTERISTICS FOR RECEIVER (FOR MSIO I/O BANK—INPUT BUFFERS)

On-Die Termination (ODT)	T_{PY}		Unit
	–1	–Std	
None	2.855	3.359	ns
100	2.85	3.353	ns

TABLE 3-209: RSDS AC SWITCHING CHARACTERISTICS FOR RECEIVER (FOR MSIOD I/O BANK—INPUT BUFFERS)

On-Die Termination (ODT)	T_{PY}		Unit
	–1	–Std	
None	2.602	3.061	ns
100	2.597	3.055	ns

TABLE 3-210: RSDS AC SWITCHING CHARACTERISTICS FOR TRANSMITTER (FOR MSIO I/O BANK—OUTPUT AND TRISTATE BUFFERS)

T_{DP}		T_{ZL}		T_{ZH}		T_{HZ}		T_{LZ}		Unit
–1	–Std	–1	–Std	–1	–Std	–1	–Std	–1	–Std	
2.097	2.467	2.303	2.709	2.291	2.695	1.961	2.307	1.947	2.29	ns

TABLE 3-211: RSDS AC SWITCHING CHARACTERISTICS FOR TRANSMITTER (FOR MSIOD I/O BANK—OUTPUT AND TRISTATE BUFFERS)

	T_{DP}		T_{ZL}		T_{ZH}		T_{HZ}		T_{LZ}		Unit
	–1	–Std	–1	–Std	–1	–Std	–1	–Std	–1	–Std	
No pre-emphasis	1.614	1.899	1.559	1.834	1.55	1.823	1.59	1.87	1.575	1.852	ns
Min pre-emphasis	1.604	1.887	1.742	2.05	1.728	2.032	1.889	2.222	1.858	2.185	ns
Med pre-emphasis	1.521	1.79	1.753	2.062	1.737	2.043	1.9	2.235	1.868	2.197	ns
Max pre-emphasis	1.492	1.754	1.762	2.073	1.745	2.052	1.91	2.247	1.876	2.206	ns

3.7.6 LVPECL

Low-Voltage Positive Emitter-Coupled Logic (LVPECL) is another differential I/O standard. It requires that one data bit be carried through two signal lines. Similar to LVDS, two pins are needed. It also requires external resistor termination. IGLOO 2 and SmartFusion 2 SoC FPGAs support only LVPECL receivers and do not support LVPECL transmitters.

Minimum and Maximum Input and Output Levels (Applicable to MSIO I/O Bank Only)

TABLE 3-212: LVPECL RECOMMENDED DC OPERATING CONDITIONS

Parameter	Symbol	Min.	Typ.	Max.	Unit
Supply voltage	V_{DDI}	3.15	3.3	3.45	V

TABLE 3-213: LVPECL DC INPUT VOLTAGE SPECIFICATION

Parameter	Symbol	Min.	Max.	Unit
DC input voltage	V_I	0	3.45	V

TABLE 3-214: LVPECL DC DIFFERENTIAL VOLTAGE SPECIFICATION

Parameter	Symbol	Min.	Typ.	Max.	Unit
Input common mode voltage	V_{ICM}	0.3		2.8	V
Input differential voltage	V_{IDIFF}	100	300	1,000	mV

TABLE 3-215: LVPECL MINIMUM AND MAXIMUM AC SWITCHING SPEEDS

Parameter	Symbol	Max.	Unit
Maximum data rate	D_{MAX}	900	Mbps

AC Switching Characteristics

Worst commercial-case conditions: T_J = 85 °C, V_{DD} = 1.14V, and V_{DDI} = 2.375V.

TABLE 3-216: LVPECL RECEIVER CHARACTERISTICS FOR MSIO I/O BANK

On-Die Termination (ODT)	T_{PY}		Unit
	–1	–Std	
None	2.572	3.025	ns
100	2.569	3.023	ns

3.8 I/O Register Specifications

This section describes input and output register specifications.

3.8.1 INPUT REGISTER

FIGURE 3-6: TIMING MODEL FOR INPUT REGISTER

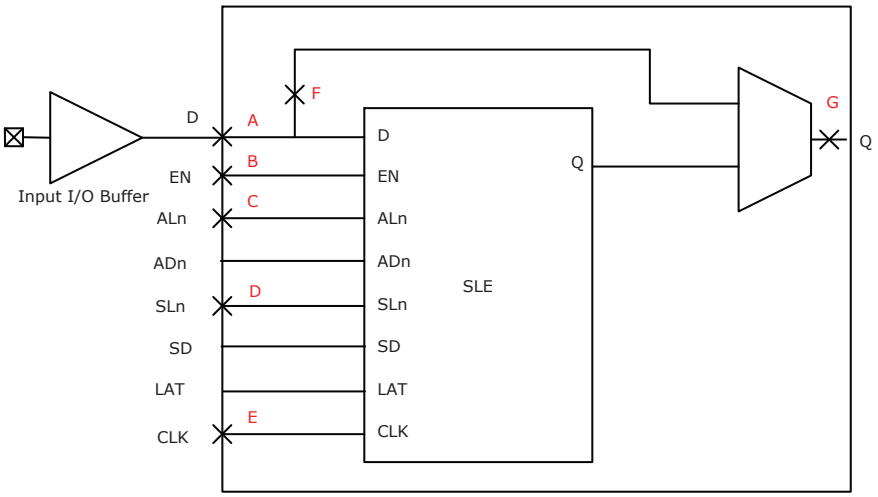

© 2026 Microchip Technology Inc. and its subsidiaries

FIGURE 3-7: I/O REGISTER INPUT TIMING DIAGRAM

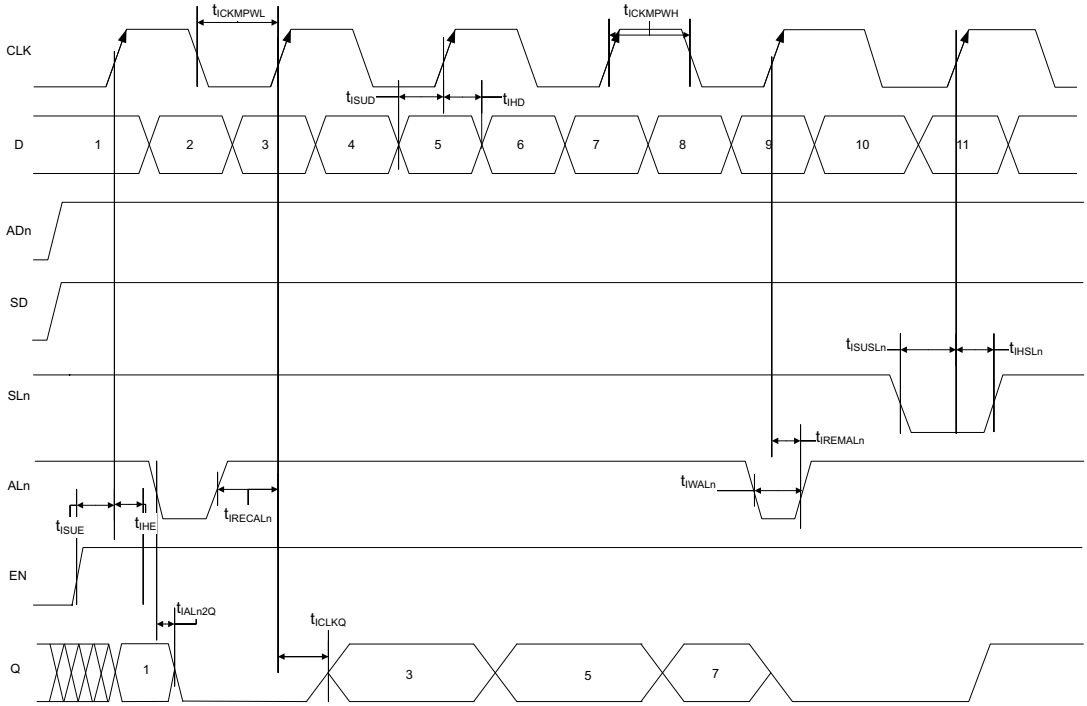

The following table lists the input data register propagation delays in worst commercial-case conditions when T_J = 85 °C, V_{DD} = 1.14V.

TABLE 3-217: INPUT DATA REGISTER PROPAGATION DELAYS

Parameter	Symbol	Measuring Nodes (from, to)[1]	–1	–Std	Unit
Bypass delay of the input register	T_{IBYP}	F, G	0.353	0.415	ns
Clock-to-Q of the input register	T_{ICLKQ}	E, G	0.16	0.188	ns
Data setup time for the input register	T_{ISUD}	A, E	0.357	0.421	ns
Data hold time for the input register	T_{IHD}	A, E	0	0	ns
Enable setup time for the input register	T_{ISUE}	B, E	0.46	0.542	ns
Enable hold time for the input register	T_{IHE}	B, E	0	0	ns
Synchronous load setup time for the input register	T_{ISUSL}	D, E	0.46	0.542	ns
Synchronous load hold time for the input register	T_{IHSL}	D, E	0	0	ns
Asynchronous clear-to-Q of the input register (ADn=1)	T_{IALN2Q}	C, G	0.625	0.735	ns
Asynchronous preset-to-Q of the input register (ADn=0)		C, G	0.587	0.69	ns
Asynchronous load removal time for the input register	$T_{IREMALN}$	C, E	0	0	ns
Asynchronous load recovery time for the input register	$T_{IRECALN}$	C, E	0.074	0.087	ns
Asynchronous load minimum pulse width for the input register	T_{IWALN}	C, C	0.304	0.357	ns
Clock minimum pulse width high for the input register	$T_{ICKMPWH}$	E, E	0.075	0.088	ns
Clock minimum pulse width low for the input register	$T_{ICKMPWL}$	E, E	0.159	0.187	ns

1 For the derating values at specific junction temperature and voltage supply levels, see Table 3-14 for derating values.

3.8.2 OUTPUT/ENABLE REGISTER

FIGURE 3-8: TIMING MODEL FOR OUTPUT/ENABLE REGISTER

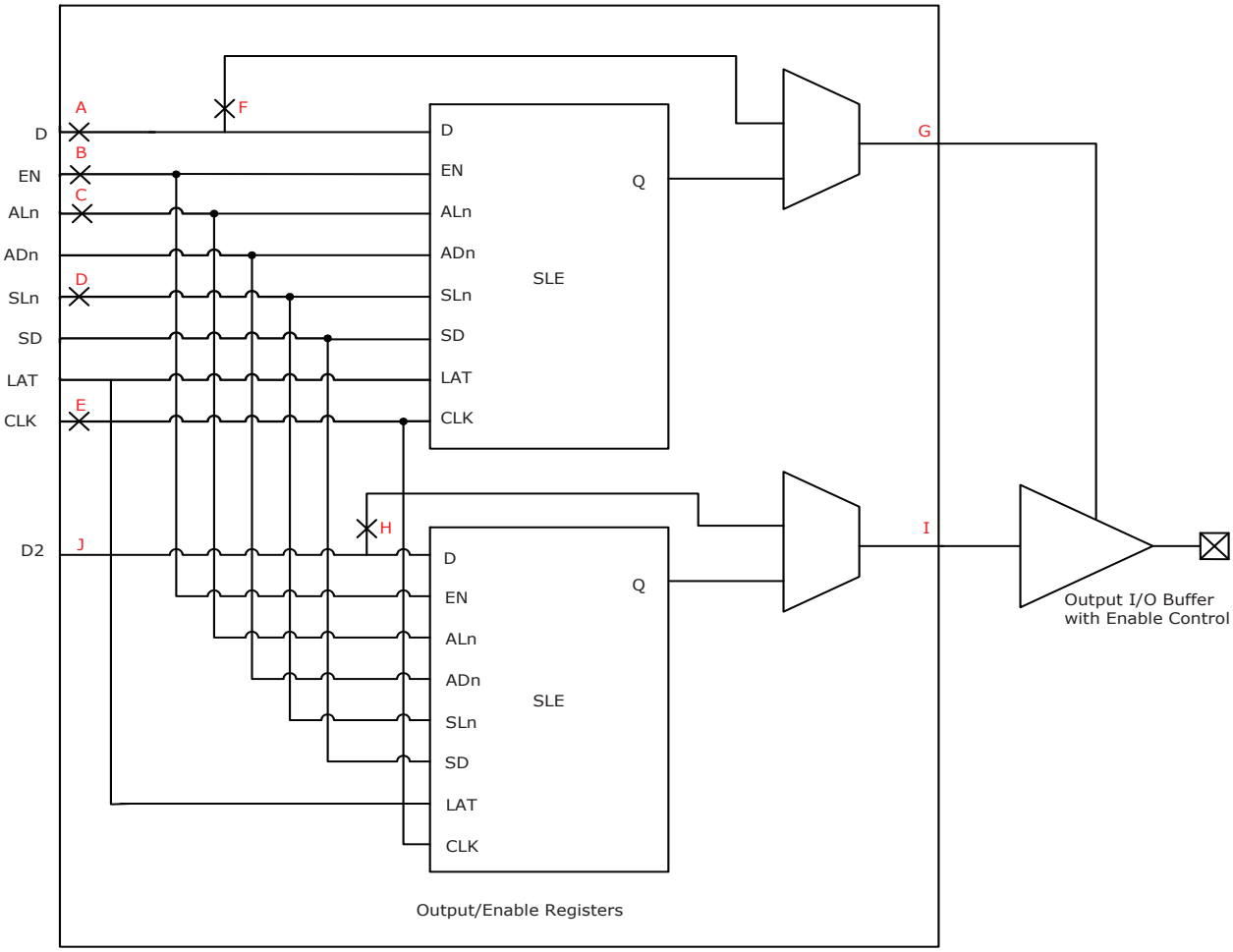

© 2026 Microchip Technology Inc. and its subsidiaries

FIGURE 3-9: I/O REGISTER OUTPUT TIMING DIAGRAM

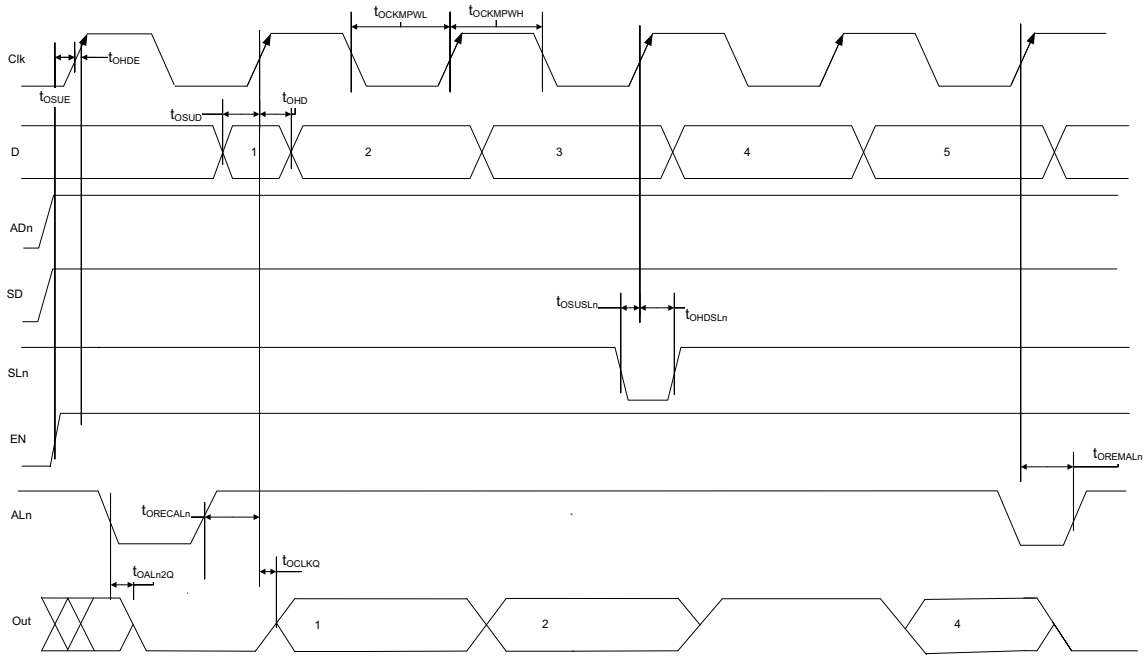

The following table lists the output/enable propagation delays in worst commercial-case conditions when T_J = 85 °C, V_{DD} = 1.14V.

TABLE 3-218: OUTPUT/ENABLE DATA REGISTER PROPAGATION DELAYS

Parameter	Symbol	Measuring Nodes (from, to)[1]	–1	–Std	Unit
Bypass delay of the output/enable register	T_{OBYP}	F, G or H, I	0.353	0.415	ns
Clock-to-Q of the output/enable register	T_{OCLKQ}	E, G or E, I	0.263	0.309	ns
Data setup time for the output/enable register	T_{OSUD}	A, E or J, E	0.19	0.223	ns
Data hold time for the output/enable register	T_{OHD}	A, E or J, E	0	0	ns
Enable setup time for the output/enable register	T_{OSUE}	B, E	0.419	0.493	ns
Enable hold time for the output/enable register	T_{OHE}	B, E	0	0	ns
Synchronous load setup time for the output/enable register	T_{OSUSL}	D, E	0.196	0.231	ns
Synchronous load hold time for the output/enable register	T_{OHSL}	D, E	0	0	ns
Asynchronous clear-to-q of the output/enable register (ADn = 1)	T_{OALN2Q}	C, G or C, I	0.505	0.594	ns
Asynchronous preset-to-q of the output/enable register (ADn = 0)		C, G or C, I	0.528	0.621	ns
Asynchronous load removal time for the output/enable register	$T_{OREMALN}$	C, E	0	0	ns
Asynchronous load recovery time for the output/enable register	$T_{ORECALN}$	C, E	0.034	0.04	ns
Asynchronous load minimum pulse width for the output/enable register	T_{OWALN}	C, C	0.304	0.357	ns
Clock minimum pulse width high for the output/enable register	$T_{OCKMPWH}$	E, E	0.075	0.088	ns
Clock minimum pulse width low for the output/enable register	$T_{OCKMPWL}$	E, E	0.159	0.187	ns

1 For the derating values at specific junction temperature and voltage supply levels, see Table 3-14 for derating values.

3.9 DDR Module Specification

This section describes input and output DDR module and timing specifications.

3.9.1 INPUT DDR MODULE

FIGURE 3-10: INPUT DDR MODULE

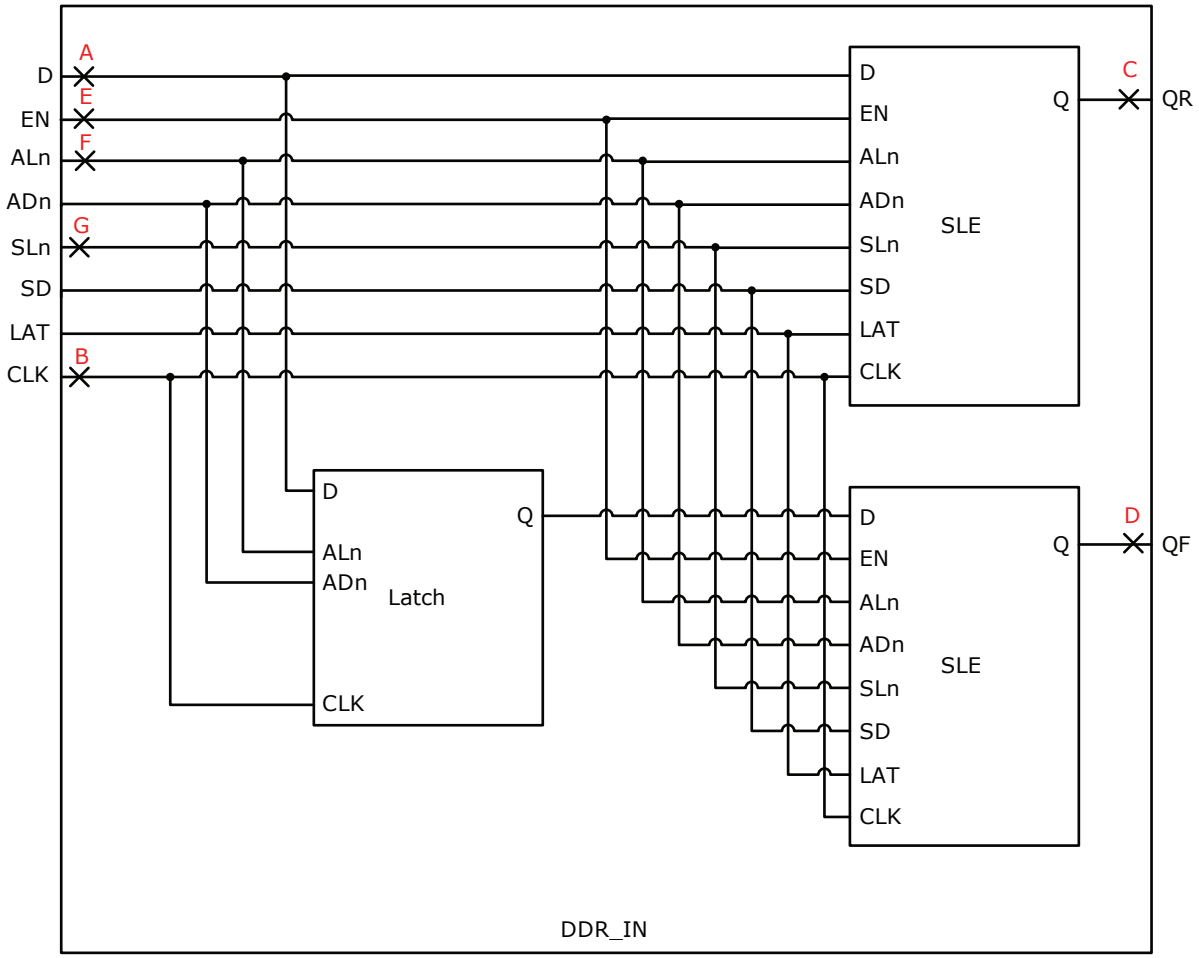

3.9.2 INPUT DDR TIMING DIAGRAM

© 2026 Microchip Technology Inc. and its subsidiaries

FIGURE 3-11: INPUT DDR TIMING DIAGRAM

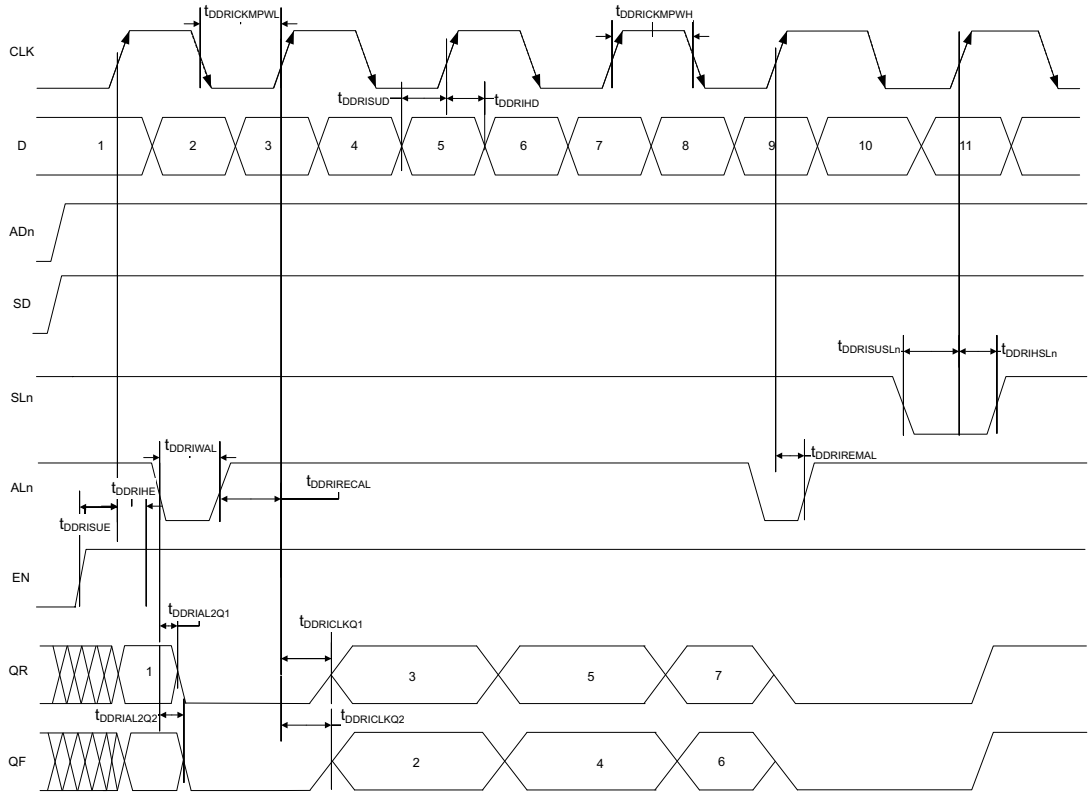

3.9.3 TIMING CHARACTERISTICS

The following table lists the input DDR propagation delays in worst commercial-case conditions when T_J = 85 °C, V_{DD} = 1.14V.

TABLE 3-219: INPUT DDR PROPAGATION DELAYS

Symbol	Description	Measuring Nodes (from, to)	–1	–Std	Unit
$T_{DDRICLKQ1}$	Clock-to-Out Out_QR for input DDR	B, C	0.16	0.188	ns
$T_{DDRICLKQ2}$	Clock-to-Out Out_QF for input DDR	B, D	0.166	0.195	ns
$T_{DDRISUD}$	Data setup for input DDR	A, B	0.357	0.421	ns
T_{DDRIHD}	Data hold for input DDR	A, B	0	0	ns
$T_{DDRISUE}$	Enable setup for input DDR	E, B	0.46	0.542	ns
T_{DDRIHE}	Enable hold for input DDR	E, B	0	0	ns
$T_{DDRISUSLN}$	Synchronous load setup for input DDR	G, B	0.46	0.542	ns
$T_{DDRIHSLN}$	Synchronous load hold for input DDR	G, B	0	0	ns
$T_{DDRIAL2Q1}$	Asynchronous load-to-out QR for input DDR	F, C	0.587	0.69	ns
$T_{DDRIAL2Q2}$	Asynchronous load-to-out QF for input DDR	F, D	0.541	0.636	ns
$T_{DDRIREMAL}$	Asynchronous load removal time for input DDR	F, B	0	0	ns
$T_{DDRIRECAL}$	Asynchronous load recovery time for input DDR	F, B	0.074	0.087	ns
$T_{DDRIWAL}$	Asynchronous load minimum pulse width for input DDR	F, F	0.304	0.357	ns
$T_{DDRICKMPWH}$	Clock minimum pulse width high for input DDR	B, B	0.075	0.088	ns

TABLE 3-219: INPUT DDR PROPAGATION DELAYS (CONTINUED)

Symbol	Description	Measuring Nodes (from, to)	–1	–Std	Unit
$T_{DDRICKMPWL}$	Clock minimum pulse width low for input DDR	B, B	0.159	0.187	ns

3.9.4 OUTPUT DDR MODULE

FIGURE 3-12: OUTPUT DDR MODULE

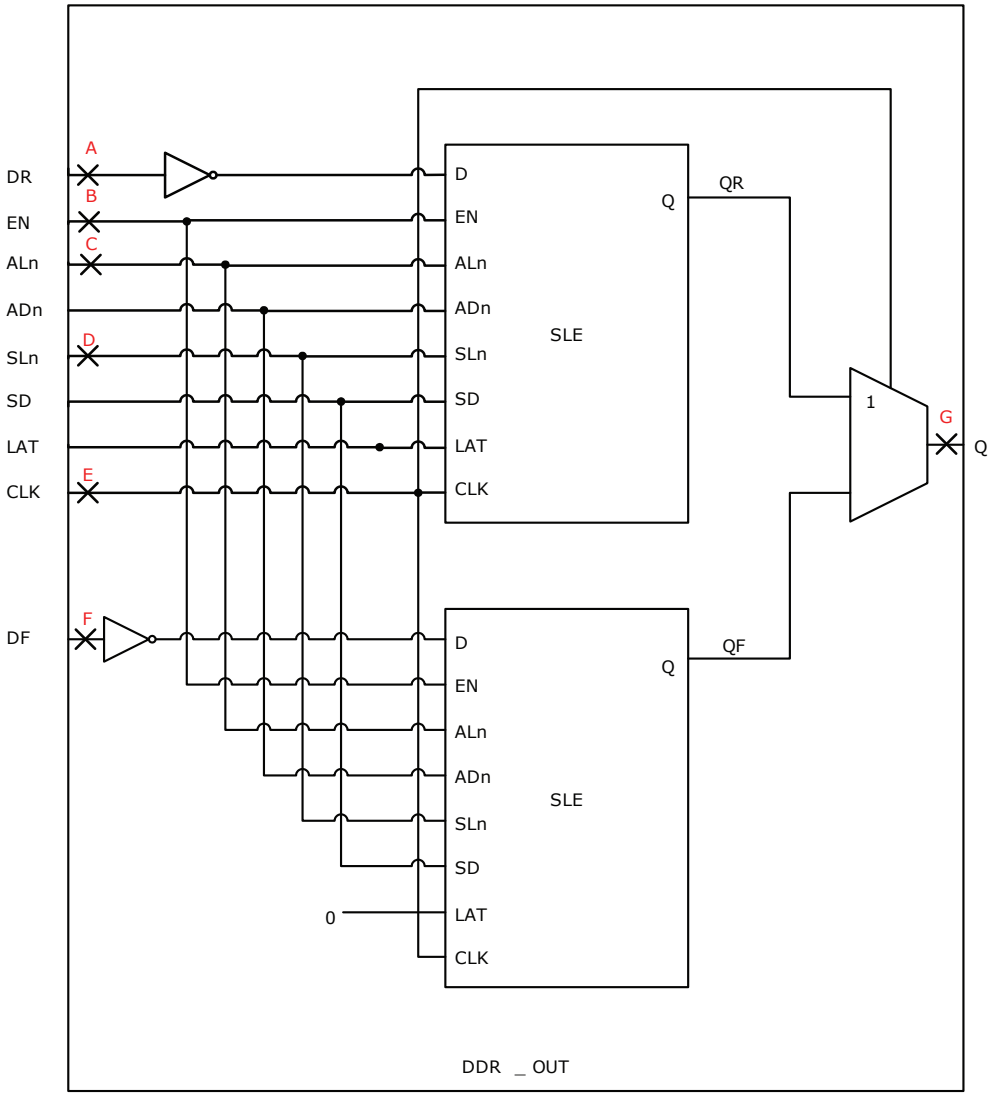

© 2026 Microchip Technology Inc. and its subsidiaries

FIGURE 3-13: OUTPUT DDR TIMING DIAGRAM

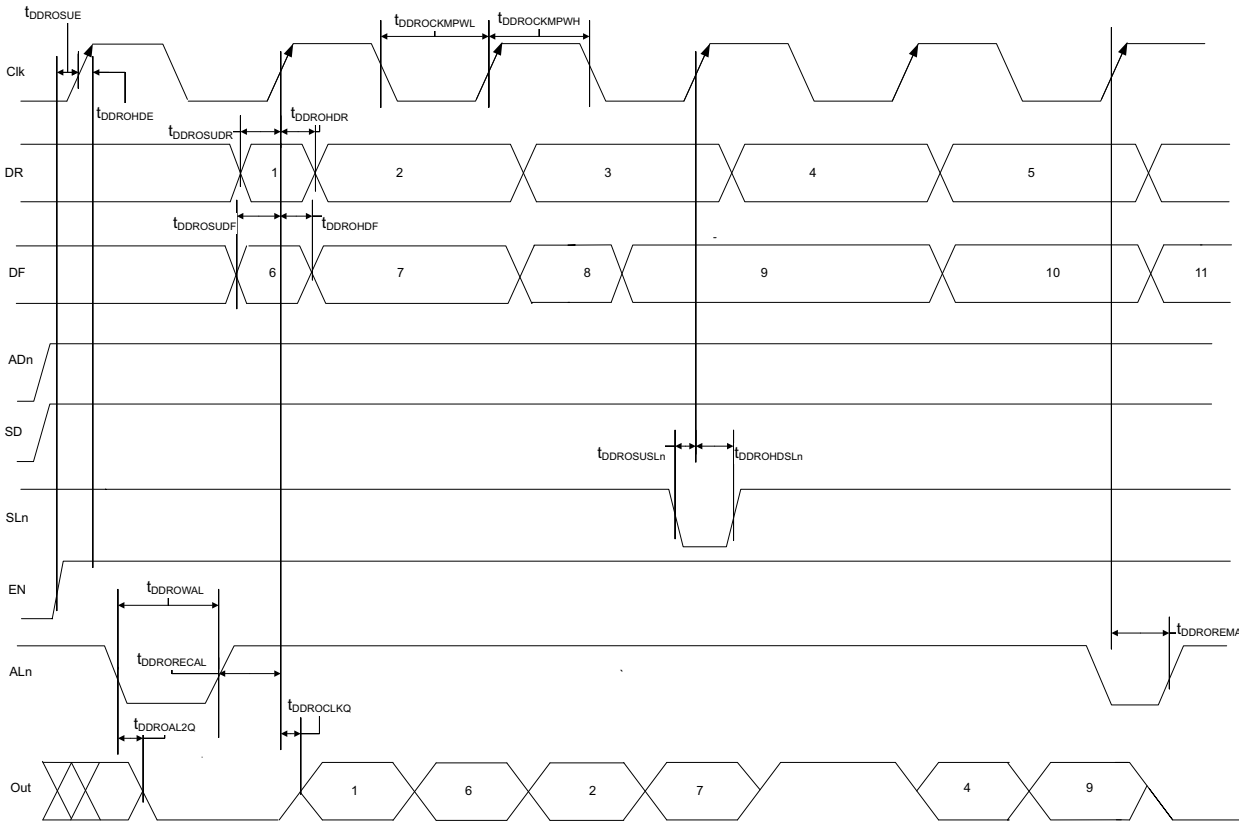

3.9.5 TIMING CHARACTERISTICS

The following table lists the output DDR propagation delays in worst commercial-case conditions when T_J = 85 °C, V_{DD} = 1.14V.

TABLE 3-220: OUTPUT DDR PROPAGATION DELAYS

Symbol	Description	Measuring Nodes (from, to)	–1	–Std	Unit
$T_{DDROCLKQ}$	Clock-to-out of DDR for output DDR	E, G	0.263	0.309	ns
$T_{DDROSUDF}$	Data_F data setup for output DDR	F, E	0.143	0.168	ns
$T_{DDROSUDR}$	Data_R data setup for output DDR	A, E	0.19	0.223	ns
$T_{DDROHDF}$	Data_F data hold for output DDR	F, E	0	0	ns
$T_{DDROHDR}$	Data_R data hold for output DDR	A, E	0	0	ns
$T_{DDROSUE}$	Enable setup for input DDR	B, E	0.419	0.493	ns
T_{DDROHE}	Enable hold for input DDR	B, E	0	0	ns
$T_{DDROSUSLN}$	Synchronous load setup for input DDR	D, E	0.196	0.231	ns
$T_{DDROHSLN}$	Synchronous load hold for input DDR	D, E	0	0	ns
$T_{DDROAL2Q}$	Asynchronous load-to-out for output DDR	C, G	0.528	0.621	ns
$T_{DDROREMAL}$	Asynchronous load removal time for output DDR	C, E	0	0	ns
$T_{DDRORECAL}$	Asynchronous load recovery time for output DDR	C, E	0.034	0.04	ns
$T_{DDROWAL}$	Asynchronous load minimum pulse width for output DDR	C, C	0.304	0.357	ns
$T_{DDROCKMPWH}$	Clock minimum pulse width high for the output DDR	E, E	0.075	0.088	ns

TABLE 3-220: OUTPUT DDR PROPAGATION DELAYS (CONTINUED)

Symbol	Description	Measuring Nodes (from, to)	–1	–Std	Unit
$T_{DDROCKMPWL}$	Clock minimum pulse width low for the output DDR	E, E	0.159	0.187	ns

3.10 Logic Element Specifications

3.10.1 4-INPUT LUT (LUT-4)

The IGLOO 2 and SmartFusion 2 SoC FPGAs offer a fully permutable 4-input LUT. In this section, timing characteristics are presented for a sample of the library. For more details, see *SmartFusion2 and IGLOO2 Macro Library Guide*.

FIGURE 3-14: LUT-4

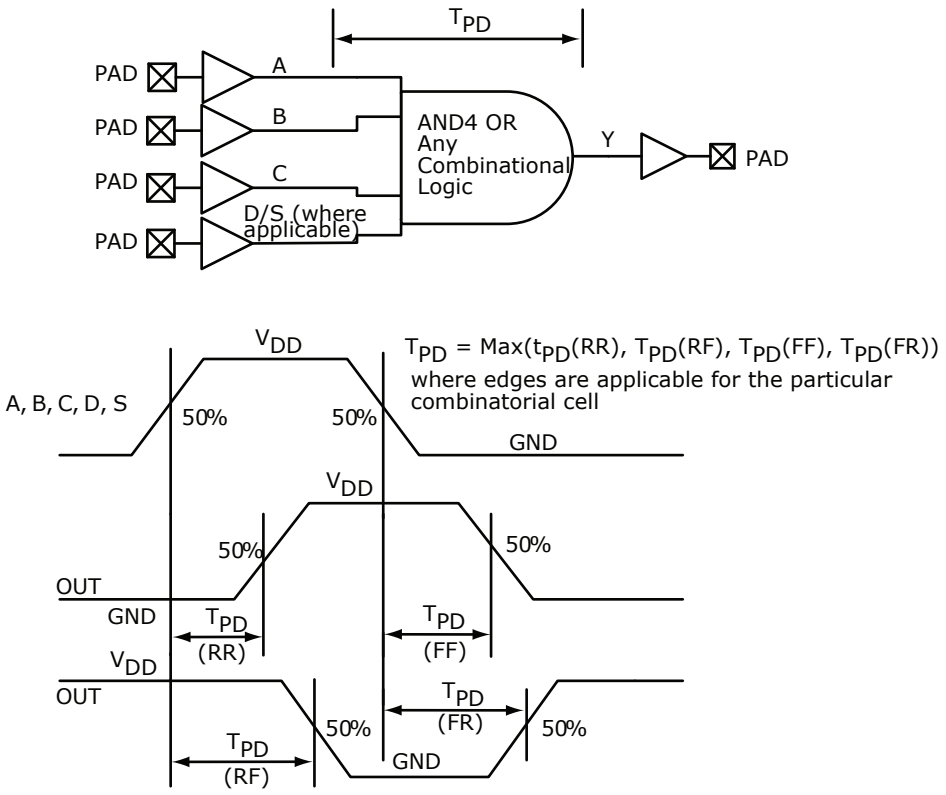

3.10.2 TIMING CHARACTERISTICS

The following table lists the combinatorial cell propagation delays in worst commercial-case conditions when T_J = 85 °C, V_{DD} = 1.14V.

TABLE 3-221: COMBINATORIAL CELL PROPAGATION DELAYS

Combinatorial Cell	Equation	Symbol	–1	–Std	Unit
INV	Y = !A	T_{PD}	0.1	0.118	ns
AND2	Y = A · B	T_{PD}	0.164	0.193	ns
NAND2	Y = !(A · B)	T_{PD}	0.147	0.173	ns
OR2	Y = A + B	T_{PD}	0.164	0.193	ns
NOR2	Y = !(A + B)	T_{PD}	0.147	0.173	ns
XOR2	Y = A ⊕ B	T_{PD}	0.164	0.193	ns

© 2026 Microchip Technology Inc. and its subsidiaries

TABLE 3-221: COMBINATORIAL CELL PROPAGATION DELAYS

XOR3	Y = A ⊕ B ⊕ C	T_{PD}	0.225	0.265	ns
AND3	Y = A · B · C	T_{PD}	0.209	0.246	ns
AND4	Y = A · B · C · D	T_{PD}	0.287	0.338	ns

3.10.3 SEQUENTIAL MODULE

IGLOO 2 and SmartFusion 2 SoC FPGAs offer a separate flip-flop which can be used independently from the LUT. The flip-flop can be configured as a register or a latch and has a data input and optional enable, synchronous load (clear or preset), and asynchronous load (clear or preset).

FIGURE 3-15: SEQUENTIAL MODULE

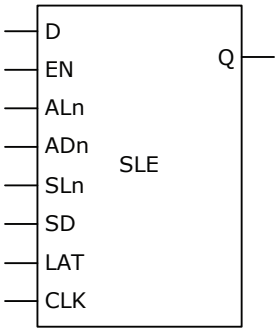

The following figure shows a configuration with SD = 0 (synchronous clear) and ADn = 1 (asynchronous clear) for a flip-flop (LAT = 0).

FIGURE 3-16: SEQUENTIAL MODULE TIMING DIAGRAM

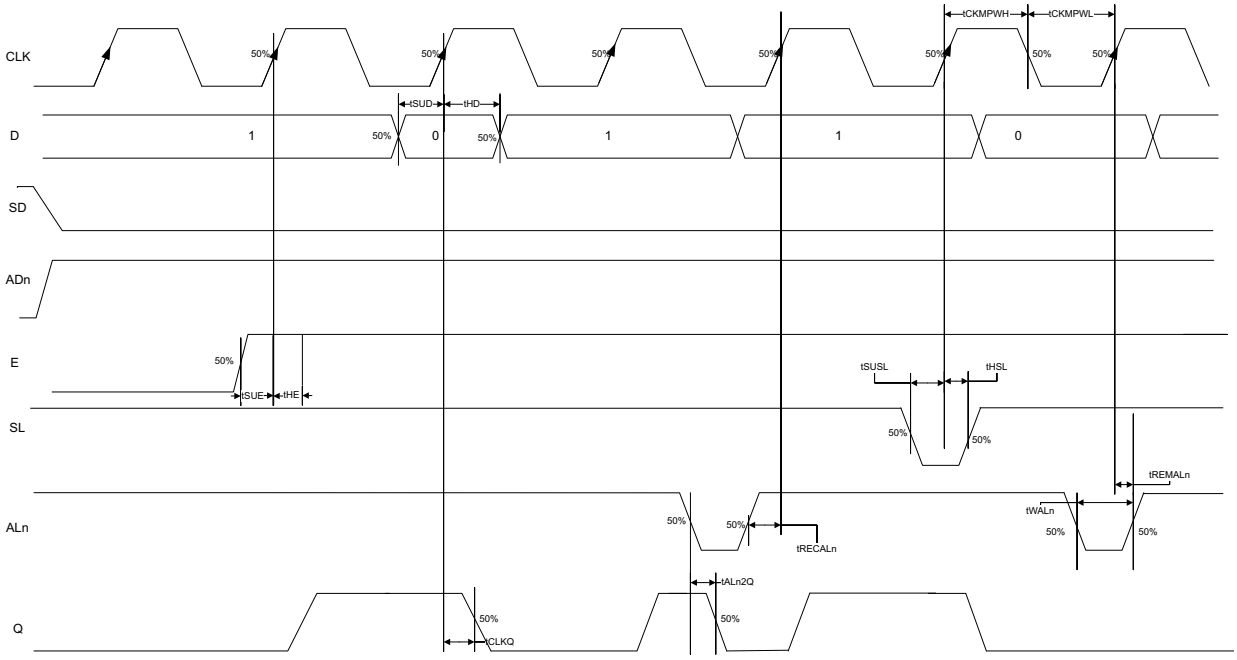

3.10.3.1 Timing Characteristics

The following table lists the register delays in worst commercial-case conditions when T_J = 85 °C, V_{DD} = 1.14V.

TABLE 3-222: REGISTER DELAYS

Parameter	Symbol	–1	–Std	Unit
Clock-to-Q of the core register	T_{CLKQ}	0.108	0.127	ns
Data setup time for the core register	T_{SUD}	0.254	0.298	ns
Data hold time for the core register	T_{HD}	0	0	ns
Enable setup time for the core register	T_{SUE}	0.335	0.394	ns
Enable hold time for the core register	T_{HE}	0	0	ns
Synchronous load setup time for the core register	T_{SUSL}	0.335	0.394	ns
Synchronous load hold time for the core register	T_{HSL}	0	0	ns
Asynchronous Clear-to-Q of the core register (ADn = 1)	T_{ALN2Q}	0.473	0.556	ns
Asynchronous preset-to-Q of the core register (ADn = 0)		0.451	0.531	ns
Asynchronous load removal time for the core register	T_{REMALN}	0	0	ns
Asynchronous load recovery time for the core register	T_{RECALN}	0.353	0.415	ns
Asynchronous load minimum pulse width for the core register	T_{WALN}	0.266	0.313	ns
Clock minimum pulse width high for the core register	T_{CKMPWH}	0.065	0.077	ns
Clock minimum pulse width low for the core register	T_{CKMPWL}	0.139	0.164	ns

3.11 Global Resource Characteristics

The IGLOO 2 and SmartFusion 2 SoC FPGA devices offer a powerful, low skew global routing network which provides an effective clock distribution throughout the FPGA fabric. See *UG0445: IGLOO2 FPGA and SmartFusion2 SoC FPGA Fabric User Guide* for the positions of various global routing resources.

The following table lists the 150 device global resources in worst commercial-case conditions when T_J = 85 °C, V_{DD} = 1.14V.

TABLE 3-223: 150 DEVICE GLOBAL RESOURCE

Parameter	Symbol	–1		–Std		Unit
		Min.	Max.	Min.	Max.	
Input low delay for global clock	T_{RCKL}	0.83	0.911	0.831	0.913	ns
Input high delay for global clock	T_{RCKH}	1.457	1.588	1.715	1.869	ns
Maximum skew for global clock	T_{RCKSW}	—	0.131	—	0.154	ns

The following table lists the 090 device global resources in worst commercial-case conditions when T_J = 85 °C, V_{DD} = 1.14 V.

TABLE 3-224: 090 DEVICE GLOBAL RESOURCE

Parameter	Symbol	–1		–Std		Unit
		Min.	Max.	Min.	Max.	
Input low delay for global clock	T_{RCKL}	0.835	0.888	0.833	0.886	ns
Input high delay for global clock	T_{RCKH}	1.405	1.489	1.654	1.752	ns
Maximum skew for global clock	T_{RCKSW}	—	0.084	—	0.098	ns

The following table lists the 050 device global resources in worst commercial-case conditions when T_J = 85 °C, V_{DD} = 1.14V.

© 2026 Microchip Technology Inc. and its subsidiaries

.

TABLE 3-225: 050 DEVICE GLOBAL RESOURCE

Parameter	Symbol	–1		–Std		Unit
		Min.	Max.	Min.	Max.	
Input low delay for global clock	T_{RCKL}	0.827	0.897	0.826	0.896	ns
Input high delay for global clock	T_{RCKH}	1.419	1.53	1.671	1.8	ns
Maximum skew for global clock	T_{RCKSW}	—	0.111	—	0.129	ns

The following table lists the 025 device global resources in worst commercial-case conditions when T_J = 85 °C, V_{DD} = 1.14V.

TABLE 3-226: 025 DEVICE GLOBAL RESOURCE

Parameter	Symbol	–1		–Std		Unit
		Min.	Max.	Min.	Max.	
Input low delay for global clock	T_{RCKL}	0.747	0.799	0.745	0.797	ns
Input high delay for global clock	T_{RCKH}	1.294	1.378	1.522	1.621	ns
Maximum skew for global clock	T_{RCKSW}	—	0.084	—	0.099	ns

The following table lists the 010 device global resources in worst commercial-case conditions when T_J = 85 °C, V_{DD} = 1.14V.

TABLE 3-227: 010 DEVICE GLOBAL RESOURCE

Parameter	Symbol	–1		–Std		Unit
		Min.	Max.	Min.	Max.	
Input low delay for global clock	T_{RCKL}	0.626	0.669	0.627	0.668	ns
Input high delay for global clock	T_{RCKH}	1.112	1.182	1.308	1.393	ns
Maximum skew for global clock	T_{RCKSW}	—	0.07	—	0.085	ns

The following table lists the 005 device global resources in worst commercial-case conditions when T_J = 85 °C, V_{DD} = 1.14V.

TABLE 3-228: 005 DEVICE GLOBAL RESOURCE

Parameter	Symbol	–1		–Std		Unit
		Min.	Max	Min.	Max.	
Input low delay for global clock	T_{RCKL}	0.625	0.66	0.628	0.66	ns
Input high delay for global clock	T_{RCKH}	1.126	1.187	1.325	1.397	ns
Maximum skew for global clock	T_{RCKSW}	—	0.061	—	0.072	ns

3.12 FPGA Fabric SRAM

See *UG0445: IGLOO2 FPGA and SmartFusion2 SoC FPGA Fabric User Guide* for more information.

3.12.1 FPGA FABRIC LARGE SRAM (LSRAM)

The following table lists the RAM1K18—dual-port mode for depth × width configuration 1K × 18 in worst commercial-case conditions when T_J = 85 °C, V_{DD} = 1.14V.

TABLE 3-229: RAM1K18—DUAL-PORT MODE FOR DEPTH × WIDTH CONFIGURATION 1K × 18

Parameter	Symbol	–1		–Std		Unit
		Min.	Max.	Min.	Max.	
Clock period	T_{CY}	2.5	—	2.941	—	ns
Clock minimum pulse width high	$T_{CLKMPWH}$	1.125	—	1.323	—	ns
Clock minimum pulse width low	$T_{CLKMPWL}$	1.125	—	1.323	—	ns
Pipelined clock period	T_{PLCY}	2.5	—	2.941	—	ns
Pipelined clock minimum pulse width high	$T_{PLCLKMPWH}$	1.125	—	1.323	—	ns
Pipelined clock minimum pulse width low	$T_{PLCLKMPWL}$	1.125	—	1.323	—	ns
Read access time with pipeline register	T_{CLK2Q}	—	0.334	—	0.393	ns
Read access time without pipeline register		—	2.273	—	2.674	ns
Access time with feed-through write timing		—	2.273	—	2.674	ns
Address setup time	T_{ADDRSU}	0.441	—	0.519	—	ns
Address hold time	T_{ADDRHD}	0.274	—	0.322	—	ns
Data setup time	T_{DSU}	0.341	—	0.401	—	ns
Data hold time	T_{DHD}	0.107	—	0.126	—	ns
Block select setup time	T_{BLKSU}	0.207	—	0.244	—	ns
Block select hold time	T_{BLKHD}	0.216		0.254		ns
Block select to out disable time (when pipelined register is disabled)	T_{BLK2Q}	—	1.529		1.799	ns
Block select minimum pulse width	T_{BLKMPW}	0.186	—	0.219	—	ns
Read enable setup time	T_{RDESU}	0.449	—	0.528	—	ns
Read enable hold time	T_{RDEHD}	0.167	—	0.197	—	ns
Pipelined read enable setup time (A_DOUT_EN, B_D-OUT_EN)	$T_{RDPLESU}$	0.248	—	0.291	—	ns
Pipelined read enable hold time (A_DOUT_EN, B_D-OUT_EN)	$T_{RDPLEHD}$	0.102	—	0.12		ns
Asynchronous reset to output propagation delay	T_{R2Q}	—	1.506	–	1.772	ns
Asynchronous reset removal time	T_{RSTREM}	0.506	—	0.595	—	ns
Asynchronous reset recovery time	T_{RSTREC}	0.004	—	0.005	—	ns
Asynchronous reset minimum pulse width	T_{RSTMPW}	0.301	—	0.354	—	ns
Pipelined register asynchronous reset removal time	$T_{PLRSTREM}$	–0.279	—	–0.328	—	ns
Pipelined register asynchronous reset recovery time	$T_{PLRSTREC}$	0.327	—	0.385	—	ns
Pipelined register asynchronous reset minimum pulse width	$T_{PLRSTMPW}$	0.282	—	0.332	—	ns
Synchronous reset setup time	T_{SRSTSU}	0.226	—	0.265	—	ns
Synchronous reset hold time	T_{SRSTHD}	0.036	—	0.043	—	ns
Write enable setup time	T_{WESU}	0.39	—	0.458	—	ns
Write enable hold time	T_{WEHD}	0.242	—	0.285	—	ns
Maximum frequency	F_{MAX}	—	400	—	340	MHz

© 2026 Microchip Technology Inc. and its subsidiaries

The following table lists the RAM1K18 – dual-port mode for depth × width configuration 2K × 9 in worst commercial-case conditions when T_J = 85 °C, V_{DD} = 1.14V.

TABLE 3-230: RAM1K18—DUAL-PORT MODE FOR DEPTH × WIDTH CONFIGURATION 2K × 9

Parameter	Symbol	–1		–Std		Unit
		Min.	Max.	Min.	Max.	
Clock period	T_{CY}	2.5	—	2.941	—	ns
Clock minimum pulse width high	$T_{CLKMPWH}$	1.125	—	1.323	—	ns
Clock minimum pulse width low	$T_{CLKMPWL}$	1.125	—	1.323	—	ns
Pipelined clock period	T_{PLCY}	2.5	—	2.941	—	ns
Pipelined clock minimum pulse width high	$T_{PLCLKMPWH}$	1.125	—	1.323	—	ns
Pipelined clock minimum pulse width low	$T_{PLCLKMPWL}$	1.125	—	1.323	—	ns
Read access time with pipeline register	T_{CLK2Q}	—	0.334	—	0.393	ns
Read access time without pipeline register		—	2.273	—	2.674	ns
Access time with feed-through write timing		—	2.273	—	2.674	ns
Address setup time	T_{ADDRSU}	0.475	—	0.559	—	ns
Address hold time	T_{ADDRHD}	0.274	—	0.322	—	ns
Data setup time	T_{DSU}	0.336	—	0.395	—	ns
Data hold time	T_{DHD}	0.082	—	0.096	—	ns
Block select setup time	T_{BLKSU}	0.207	—	0.244	—	ns
Block select hold time	T_{BLKHD}	0.216		0.254	—	ns
Block select to out disable time (when pipelined register is disabled)	T_{BLK2Q}	—	1.529	—	1.799	ns
Block select minimum pulse width	T_{BLKMPW}	0.186	—	0.219	—	ns
Read enable setup time	T_{RDESU}	0.485	—	0.57	—	ns
Read enable hold time	T_{RDEHD}	0.071	—	0.083	—	ns
Pipelined read enable setup time (A_DOUT_EN, B_D-OUT_EN)	$T_{RDPLESU}$	0.248	—	0.291	—	ns
Pipelined read enable hold time (A_DOUT_EN, B_D-OUT_EN)	$T_{RDPLEHD}$	0.102	—	0.12	—	ns
Asynchronous reset to output propagation delay	T_{R2Q}	—	1.514	—	1.781	ns
Asynchronous reset removal time	T_{RSTREM}	0.506	—	0.595	—	ns
Asynchronous reset recovery time	T_{RSTREC}	0.004	—	0.005	—	ns
Asynchronous reset minimum pulse width	T_{RSTMPW}	0.301	—	0.354	—	ns
Pipelined register asynchronous reset removal time	$T_{PLRSTREM}$	–0.279	—	–0.328	—	ns
Pipelined register asynchronous reset recovery time	$T_{PLRSTREC}$	0.327	—	0.385	—	ns
Pipelined register asynchronous reset minimum pulse width	$T_{PLRSTMPW}$	0.282	—	0.332	—	ns
Synchronous reset setup time	T_{SRSTSU}	0.226	—	0.265	—	ns
Synchronous reset hold time	T_{SRSTHD}	0.036	—	0.043	—	ns
Write enable setup time	T_{WESU}	0.415	—	0.488	—	ns
Write enable hold time	T_{WEHD}	0.048	—	0.057	—	ns
Maximum frequency	F_{MAX}	—	400	—	340	MHz

The following table lists the RAM1K18—dual-port mode for depth × width configuration 4K × 4 in worst commercial-case conditions when T_J = 85 °C, V_{DD} = 1.14V.

TABLE 3-231: RAM1K18—DUAL-PORT MODE FOR DEPTH × WIDTH CONFIGURATION 4K × 4

Parameter	Symbol	–1		–Std		Unit
		Min.	Max.	Min.	Max.	
Clock period	T_{CY}	2.5	—	2.941	—	ns
Clock minimum pulse width high	$T_{CLKMPWH}$	1.125	—	1.323	—	ns
Clock minimum pulse width low	$T_{CLKMPWL}$	1.125	—	1.323	—	ns
Pipelined clock period	T_{PLCY}	2.5	—	2.941	—	ns
Pipelined clock minimum pulse width high	$T_{PLCLKMPWH}$	1.125	—	1.323	—	ns
Pipelined clock minimum pulse width low	$T_{PLCLKMPWL}$	1.125	—	1.323	—	ns
Read access time with pipeline register	T_{CLK2Q}	—	0.323		0.38	ns
Read access time without pipeline register		—	2.273		2.673	ns
Access time with feed-through write timing		—	2.273		2.673	ns
Address setup time	T_{ADDRSU}	0.543	—	0.638	—	ns
Address hold time	T_{ADDRHD}	0.274	—	0.322	—	ns
Data setup time	T_{DSU}	0.334	—	0.393	—	ns
Data hold time	T_{DHD}	0.082	—	0.096	—	ns
Block select setup time	T_{BLKSU}	0.207	—	0.244	—	ns
Block select hold time	T_{BLKHD}	0.216	—	0.254	—	ns
Block select to out disable time (when pipelined register is disabled)	T_{BLK2Q}	—	1.511	—	1.778	ns
Block select minimum pulse width	T_{BLKMPW}	0.186	—	0.219	—	ns
Read enable setup time	T_{RDESU}	0.516	—	0.607	—	ns
Read enable hold time	T_{RDEHD}	0.071	—	0.083	—	ns
Pipelined read enable setup time (A_DOUT_EN, B_DOUT_EN)	$T_{RDPLESU}$	0.248	—	0.291	—	ns
Pipelined read enable hold time (A_DOUT_EN, B_DOUT_EN)	$T_{RDPLEHD}$	0.102	—	0.12	—	ns
Asynchronous reset to output propagation delay	T_{R2Q}	—	1.507		1.773	ns
Asynchronous reset removal time	T_{RSTREM}	0.506	—	0.595	—	ns
Asynchronous reset recovery time	T_{RSTREC}	0.004	—	0.005	—	ns
Asynchronous reset minimum pulse width	T_{RSTMPW}	0.301	—	0.354	—	ns
Pipelined register asynchronous reset removal time	$T_{PLRSTREM}$	–0.279	—	–0.328	—	ns
Pipelined register asynchronous reset recovery time	$T_{PLRSTREC}$	0.327	—	0.385	—	ns
Pipelined register asynchronous reset minimum pulse width	$T_{PLRSTMPW}$	0.282	—	0.332	—	ns
Synchronous reset setup time	T_{SRSTSU}	0.226	—	0.265	—	ns
Synchronous reset hold time	T_{SRSTHD}	0.036	—	0.043	—	ns
Write enable setup time	T_{WESU}	0.458	—	0.539	—	ns
Write enable hold time	T_{WEHD}	0.048	—	0.057	—	ns
Maximum frequency	F_{MAX}	—	400	—	340	MHz

© 2026 Microchip Technology Inc. and its subsidiaries

The following table lists the RAM1K18—dual-port mode for depth × width configuration 8K × 2 in worst commercial-case conditions when T_J = 85 °C, V_{DD} = 1.14V.

TABLE 3-232: RAM1K18—DUAL-PORT MODE FOR DEPTH × WIDTH CONFIGURATION 8K × 2

Parameter	Symbol	–1		–Std		Unit
		Min.	Max.	Min.	Max.	
Clock period	T_{CY}	2.5	—	2.941	—	ns
Clock minimum pulse width high	$T_{CLKMPWH}$	1.125	—	1.323	—	ns
Clock minimum pulse width low	$T_{CLKMPWL}$	1.125	—	1.323	—	ns
Pipelined clock period	T_{PLCY}	2.5	—	2.941	—	ns
Pipelined clock minimum pulse width high	$T_{PLCLKMPWH}$	1.125	—	1.323	—	ns
Pipelined clock minimum pulse width low	$T_{PLCLKMPWL}$	1.125	—	1.323	—	ns
Read access time with pipeline register	T_{CLK2Q}	—	0.32	—	0.377	ns
Read access time without pipeline register		—	2.272	—	2.673	ns
Access time with feed-through write timing		—	2.272	—	2.673	ns
Address setup time	T_{ADDRSU}	0.612	—	0.72	—	ns
Address hold time	T_{ADDRHD}	0.274	—	0.322	—	ns
Data setup time	T_{DSU}	0.33	—	0.388	—	ns
Data hold time	T_{DHD}	0.082	—	0.096	—	ns
Block select setup time	T_{BLKSU}	0.207	—	0.244	—	ns
Block select hold time	T_{BLKHD}	0.216		0.254	—	ns
Block select to out disable time (when pipelined register is disabled)	T_{BLK2Q}		1.511		1.778	ns
Block select minimum pulse width	T_{BLKMPW}	0.186	—	0.219	—	ns
Read enable setup time	T_{RDESU}	0.529	—	0.622	—	ns
Read enable hold time	T_{RDEHD}	0.071	—	0.083	—	ns
Pipelined read enable setup time (A_DOUT_EN, B_D-OUT_EN)	$T_{RDPLESU}$	0.248	—	0.291	—	ns
Pipelined read enable hold time (A_DOUT_EN, B_D-OUT_EN)	$T_{RDPLEHD}$	0.102	—	0.12	—	ns
Asynchronous reset to output propagation delay	T_{R2Q}	—	1.528	—	1.797	ns
Asynchronous reset removal time	T_{RSTREM}	0.506	—	0.595	—	ns
Asynchronous reset recovery time	T_{RSTREC}	0.004	—	0.005	—	ns
Asynchronous reset minimum pulse width	T_{RSTMPW}	0.301	—	0.354	—	ns
Pipelined register asynchronous reset removal time	$T_{PLRSTREM}$	–0.279	—	–0.328	—	ns
Pipelined register asynchronous reset recovery time	$T_{PLRSTREC}$	0.327	—	0.385	—	ns
Pipelined register asynchronous reset minimum pulse width	$T_{PLRSTMPW}$	0.282	—	0.332	—	ns
Synchronous reset setup time	T_{SRSTSU}	0.226	—	0.265	—	ns
Synchronous reset hold time	T_{SRSTHD}	0.036	—	0.043	—	ns
Write enable setup time	T_{WESU}	0.488	—	0.574	—	ns
Write enable hold time	T_{WEHD}	0.048	—	0.057	—	ns
Maximum frequency	F_{MAX}	—	400	—	340	MHz

The following table lists the RAM1K18—dual-port mode for depth × width configuration 16K × 1 in worst commercial-case conditions when T_J = 85 °C, V_{DD} = 1.14 V.

TABLE 3-233: RAM1K18—DUAL-PORT MODE FOR DEPTH × WIDTH CONFIGURATION 16K × 1

Parameter	Symbol	–1		–Std		Unit
		Min.	Max.	Min.	Max.	
Clock period	T_{CY}	2.5	—	2.941	—	ns
Clock minimum pulse width high	$T_{CLKMPWH}$	1.125	—	1.323	—	ns
Clock minimum pulse width low	$T_{CLKMPWL}$	1.125	—	1.323	—	ns
Pipelined clock period	T_{PLCY}	2.5	—	2.941	—	ns
Pipelined clock minimum pulse width high	$T_{PLCLK-MPWH}$	1.125	—	1.323	—	ns
Pipelined clock minimum pulse width low	$T_{PLCLK-MPWL}$	1.125	—	1.323	—	ns
Read access time with pipeline register	T_{CLK2Q}	—	0.32	—	0.377	ns
Read access time without pipeline register		—	2.269	—	2.669	ns
Access time with feed-through write timing		—	2.269	—	2.669	ns
Address setup time	T_{ADDRSU}	0.626	—	0.737	—	ns
Address hold time	T_{ADDRHD}	0.274	—	0.322	—	ns
Data setup time	T_{DSU}	0.322	—	0.378	—	ns
Data hold time	T_{DHD}	0.082	—	0.096	—	ns
Block select setup time	T_{BLKSU}	0.207	—	0.244	—	ns
Block select hold time	T_{BLKHD}	0.216	—	0.254	—	ns
Block select to out disable time (when pipelined register is disabled)	T_{BLK2Q}		1.51		1.777	ns
Block select minimum pulse width	T_{BLKMPW}	0.186	—	0.219	—	ns
Read enable setup time	T_{RDESU}	0.53	—	0.624	—	ns
Read enable hold time	T_{RDEHD}	0.071	—	0.083	—	ns
Pipelined read enable setup time (A_DOUT_EN, B_DOUT_EN)	$T_{RDPLESU}$	0.248	—	0.291	—	ns
Pipelined read enable hold time (A_DOUT_EN, B_DOUT_EN)	$T_{RDPLEHD}$	0.102	—	0.12	—	ns
Asynchronous reset to output propagation delay	T_{R2Q}		1.547		1.82	ns
Asynchronous reset removal time	T_{RSTREM}	0.506	—	0.595		ns
Asynchronous reset recovery time	T_{RSTREC}	0.004	—	0.005		ns
Asynchronous reset minimum pulse width	T_{RSTMPW}	0.301	—	0.354		ns
Pipelined register asynchronous reset removal time	$T_{PLRSTREM}$	–0.279	—	–0.328		ns
Pipelined register asynchronous reset recovery time	$T_{PLRSTREC}$	0.327	—	0.385		ns
Pipelined register asynchronous reset minimum pulse width	$T_{PLRSTMPW}$	0.282	—	0.332	—	ns
Synchronous reset setup time	T_{SRSTSU}	0.226	—	0.265	—	ns
Synchronous reset hold time	T_{SRSTHD}	0.036	—	0.043	—	ns
Write enable setup time	T_{WESU}	0.454	—	0.534	—	ns
Write enable hold time	T_{WEHD}	0.048	—	0.057	—	ns
Maximum frequency	F_{MAX}	—	400	—	340	MHz

© 2026 Microchip Technology Inc. and its subsidiaries

The following table lists the RAM1K18—two-port mode for depth × width configuration 512 × 36 in worst commercial-case conditions when T_J = 85 °C, V_{DD} = 1.14V.

TABLE 3-234: RAM1K18—TWO-PORT MODE FOR DEPTH × WIDTH CONFIGURATION 512 × 36

Parameter	Symbol	–1		–Std		Unit
		Min.	Max.	Min.	Max.	
Clock period	T_{CY}	2.5	—	2.941	—	ns
Clock minimum pulse width high	$T_{CLKMPWH}$	1.125	—	1.323	—	ns
Clock minimum pulse width low	$T_{CLKMPWL}$	1.125	—	1.323	—	ns
Pipelined clock period	T_{PLCY}	2.5	—	2.941	—	ns
Pipelined clock minimum pulse width high	$T_{PLCLK-MPWH}$	1.125	—	1.323	—	ns
Pipelined clock minimum pulse width low	$T_{PLCLK-MPWL}$	1.125	—	1.323	—	ns
Read access time with pipeline register	T_{CLK2Q}	—	0.334		0.393	ns
Read access time without pipeline register		—	2.25		2.647	ns
Address setup time	T_{ADDRSU}	0.313	—	0.368	—	ns
Address hold time	T_{ADDRHD}	0.274	—	0.322	—	ns
Data setup time	T_{DSU}	0.337	—	0.396	—	ns
Data hold time	T_{DHD}	0.111	—	0.13	—	ns
Block select setup time	T_{BLKSU}	0.207	—	0.244	—	ns
Block select hold time	T_{BLKHD}	0.201	—	0.237	—	ns
Block select to out disable time (when pipelined register is disabled)	T_{BLK2Q}	—	2.25	—	2.647	ns
Block select minimum pulse width	T_{BLKMPW}	0.186	—	0.219	—	ns
Read enable setup time	T_{RDESU}	0.449	—	0.528	—	ns
Read enable hold time	T_{RDEHD}	0.167	—	0.197	—	ns
Pipelined read enable setup time (A_DOUT_EN, B_DOUT_EN)	$T_{RDPLESU}$	0.248	—	0.291	—	ns
Pipelined read enable hold time (A_DOUT_EN, B_DOUT_EN)	$T_{RDPLEHD}$	0.102	—	0.12	—	ns
Asynchronous reset to output propagation delay	T_{R2Q}	—	1.506	—	1.772	ns
Asynchronous reset removal time	T_{RSTREM}	0.506	—	0.595	—	ns
Asynchronous reset recovery time	T_{RSTREC}	0.004	—	0.005	—	ns
Asynchronous reset minimum pulse width	T_{RSTMPW}	0.301	—	0.354	—	ns
Pipelined register asynchronous reset removal time	$T_{PLRSTREM}$	–0.279	—	–0.328		ns
Pipelined register asynchronous reset recovery time	$T_{PLRSTREC}$	0.327	—	0.385	—	ns
Pipelined register asynchronous reset minimum pulse width	$T_{PLRSTMPW}$	0.282	—	0.332	—	ns
Synchronous reset setup time	T_{SRSTSU}	0.226	—	0.265	—	ns
Synchronous reset hold time	T_{SRSTHD}	0.036	—	0.043	—	ns
Write enable setup time	T_{WESU}	0.39	—	0.458	—	ns
Write enable hold time	T_{WEHD}	0.242	—	0.285	—	ns
Maximum frequency	F_{MAX}	—	400	—	340	MHz

3.12.2 FPGA FABRIC MICRO SRAM (MSRAM)

The following table lists the µSRAM in 64 × 18 mode in worst commercial-case conditions when T_J = 85 °C, V_{DD} = 1.14V.

TABLE 3-235: MSRAM (RAM64X18) IN 64 × 18 MODE

Parameter	Symbol	–1		–Std		Unit
		Min.	Max.	Min.	Max.	
Read clock period	T_{CY}	4	—	4	—	ns
Read clock minimum pulse width high	$T_{CLKMPWH}$	1.8	—	1.8	—	ns
Read clock minimum pulse width low	$T_{CLKMPWL}$	1.8	—	1.8	—	ns
Read pipeline clock period	T_{PLCY}	4	—	4	—	ns
Read pipeline clock minimum pulse width high	$T_{PLCLKMPWH}$	1.8	—	1.8	—	ns
Read pipeline clock minimum pulse width low	$T_{PLCLKMPWL}$	1.8	—	1.8	—	ns
Read access time with pipeline register	T_{CLK2Q}		0.266		0.313	ns
Read access time without pipeline register			1.677		1.973	ns
Read address setup time in synchronous mode	T_{ADDRSU}	0.301	—	0.354	—	ns
Read address setup time in asynchronous mode		1.856	—	2.184	—	ns
Read address hold time in synchronous mode	T_{ADDRHD}	0.091	—	0.107	—	ns
Read address hold time in asynchronous mode		–0.778	—	–0.915	—	ns
Read enable setup time	T_{RDENSU}	0.278	—	0.327	—	ns
Read enable hold time	T_{RDENHD}	0.057	—	0.067	—	ns
Read block select setup time	T_{BLKSU}	1.839	—	2.163	—	ns
Read block select hold time	T_{BLKHD}	–0.65	—	–0.765	—	ns
Read block select to out disable time (when pipelined register is disabled)	T_{BLK2Q}	—	2.036	—	2.396	ns
Read asynchronous reset removal time (pipelined clock)	T_{RSTREM}	–0.023	—	–0.027	—	ns
Read asynchronous reset removal time (non-pipelined clock)		0.046	—	0.054	—	ns
Read asynchronous reset recovery time (pipelined clock)	T_{RSTREC}	0.507	—	0.597	—	ns
Read asynchronous reset recovery time (non-pipelined clock)		0.236	—	0.278	—	ns
Read asynchronous reset to output propagation delay (with pipelined register enabled)	T_{R2Q}	—	0.839	—	0.987	ns
Read synchronous reset setup time	T_{SRSTSU}	0.271	—	0.319	—	ns
Read synchronous reset hold time	T_{SRSTHD}	0.061	—	0.071	—	ns
Write clock period	T_{CCY}	4	—	4	—	ns
Write clock minimum pulse width high	$T_{CCLKMPWH}$	1.8	—	1.8	—	ns
Write clock minimum pulse width low	$T_{CCLKMPWL}$	1.8	—	1.8	—	ns
Write block setup time	T_{BLKCSU}	0.404	—	0.476	—	ns
Write block hold time	T_{BLKCHD}	0.007	—	0.008	—	ns
Write input data setup time	T_{DINCSU}	0.115	—	0.135	—	ns
Write input data hold time	T_{DINCHD}	0.15	—	0.177	—	ns
Write address setup time	$T_{ADDRCSU}$	0.088	—	0.104	—	ns
Write address hold time	$T_{ADDRCHD}$	0.128	—	0.15	—	ns
Write enable setup time	T_{WECSU}	0.397	—	0.467	—	ns
Write enable hold time	T_{WECHD}	–0.026	—	–0.03	—	ns
Maximum frequency	F_{MAX}	—	250	—	250	MHz

© 2026 Microchip Technology Inc. and its subsidiaries

The following table lists the µSRAM in 64 × 16 mode in worst commercial-case conditions when T_J = 85 °C, V_{DD} = 1.14V.

TABLE 3-236: MSRAM (RAM64X16) IN 64 × 16 MODE

Parameter	Symbol	–1		–Std		Unit
		Min.	Max.	Min.	Max.	
Read clock period	T_{CY}	4	—	4	—	ns
Read clock minimum pulse width high	$T_{CLKMPWH}$	1.8	—	1.8	—	ns
Read clock minimum pulse width low	$T_{CLKMPWL}$	1.8	—	1.8	—	ns
Read pipeline clock period	T_{PLCY}	4	—	4	—	ns
Read pipeline clock minimum pulse width high	$T_{PLCLKMPWH}$	1.8	—	1.8	—	ns
Read pipeline clock minimum pulse width low	$T_{PLCLKMPWL}$	1.8	—	1.8	—	ns
Read access time with pipeline register	T_{CLK2Q}	—	0.266	—	0.313	ns
Read access time without pipeline register		—	1.677	—	1.973	ns
Read address setup time in synchronous mode	T_{ADDRSU}	0.301	—	0.354	—	ns
Read address setup time in asynchronous mode		1.856	—	2.184	—	ns
Read address hold time in synchronous mode	T_{ADDRHD}	0.091	—	0.107	—	ns
Read address hold time in asynchronous mode		–0.778	—	–0.915	—	ns
Read enable setup time	T_{RDENSU}	0.278	—	0.327	—	ns
Read enable hold time	T_{RDENHD}	0.057	—	0.067	—	ns
Read block select setup time	T_{BLKSU}	1.839	—	2.163	—	ns
Read block select hold time	T_{BLKHD}	–0.65	—	–0.765	—	ns
Read block select to out disable time (when pipelined register is disabled)	T_{BLK2Q}		2.036		2.396	ns
Read asynchronous reset removal time (pipelined clock)	T_{RSTREM}	–0.023	—	–0.027	—	ns
Read asynchronous reset removal time (non-pipelined clock)		0.046	—	0.054	—	ns
Read asynchronous reset recovery time (pipelined clock)	T_{RSTREC}	0.507	—	0.597	—	ns
Read asynchronous reset recovery time (non-pipelined clock)		0.236	—	0.278	—	ns
Read asynchronous reset to output propagation delay (with pipelined register enabled)	T_{R2Q}	—	0.835		0.983	ns
Read synchronous reset setup time	T_{SRSTSU}	0.271	—	0.319	—	ns
Read synchronous reset hold time	T_{SRSTHD}	0.061	—	0.071	—	ns
Write clock period	T_{CCY}	4	—	4	—	ns
Write clock minimum pulse width high	$T_{CCLKMPWH}$	1.8	—	1.8	—	ns
Write clock minimum pulse width low	$T_{CCLKMPWL}$	1.8	—	1.8	—	ns
Write block setup time	T_{BLKCSU}	0.404	—	0.476	—	ns
Write block hold time	T_{BLKCHD}	0.007	—	0.008	—	ns
Write input data setup time	T_{DINCSU}	0.115	—	0.135	—	ns
Write input data hold time	T_{DINCHD}	0.15	—	0.177	—	ns
Write address setup time	$T_{ADDRCSU}$	0.088	—	0.104	—	ns
Write address hold time	$T_{ADDRCHD}$	0.128	—	0.15	—	ns
Write enable setup time	T_{WECSU}	0.397	—	0.467	—	ns
Write enable hold time	T_{WECHD}	–0.026	—	–0.03	—	ns
Maximum frequency	F_{MAX}		250	—	250	MHz

The following table lists the µSRAM in 128 × 9 mode in worst commercial-case conditions when T_J = 85 °C, V_{DD} = 1.14V.

TABLE 3-237: MSRAM (RAM128X9) IN 128 × 9 MODE

Parameter	Symbol	–1		–Std		Unit
		Min.	Max.	Min.	Max.	
Read clock period	T_{CY}	4	—	4	—	ns
Read clock minimum pulse width high	$T_{CLKMPWH}$	1.8	—	1.8	—	ns
Read clock minimum pulse width low	$T_{CLKMPWL}$	1.8	—	1.8	—	ns
Read pipeline clock period	T_{PLCY}	4	—	4	—	ns
Read pipeline clock minimum pulse width high	$T_{PLCLKMPWH}$	1.8	—	1.8	—	ns
Read pipeline clock minimum pulse width low	$T_{PLCLKMPWL}$	1.8	—	1.8	—	ns
Read access time with pipeline register	T_{CLK2Q}		0.266		0.313	ns
Read access time without pipeline register			1.677		1.973	ns
Read address setup time in synchronous mode	T_{ADDRSU}	0.301	—	0.354	—	ns
Read address setup time in asynchronous mode		1.856	—	2.184	—	ns
Read address hold time in synchronous mode	T_{ADDRHD}	0.091	—	0.107	—	ns
Read address hold time in asynchronous mode		–0.778	—	–0.915	—	ns
Read enable setup time	T_{RDENSU}	0.278	—	0.327	—	ns
Read enable hold time	T_{RDENHD}	0.057	—	0.067	—	ns
Read block select setup time	T_{BLKSU}	1.839	—	2.163	—	ns
Read block select hold time	T_{BLKHD}	–0.65	—	–0.765	—	ns
Read block select to out disable time (when pipelined register is disabled)	T_{BLK2Q}	—	2.036	—	2.396	ns
Read asynchronous reset removal time (pipelined clock)	T_{RSTREM}	–0.023	—	–0.027	—	ns
Read asynchronous reset removal time (non-pipelined clock)		0.046	—	0.054	—	ns
Read asynchronous reset recovery time (pipelined clock)	T_{RSTREC}	0.507	—	0.597	—	ns
Read asynchronous reset recovery time (non-pipelined clock)		0.236	—	0.278		ns
Read asynchronous reset to output propagation delay (with pipelined register enabled)	T_{R2Q}	—	0.835	—	0.982	ns
Read synchronous reset setup time	T_{SRSTSU}	0.271	—	0.319	—	ns
Read synchronous reset hold time	T_{SRSTHD}	0.061	—	0.071	—	ns
Write clock period	T_{CCY}	4	—	4	—	ns
Write clock minimum pulse width high	$T_{CCLKMPWH}$	1.8	—	1.8	—	ns
Write clock minimum pulse width low	$T_{CCLKMPWL}$	1.8	—	1.8	—	ns
Write block setup time	T_{BLKCSU}	0.404	—	0.476	—	ns
Write block hold time	T_{BLKCHD}	0.007	—	0.008	—	ns
Write input data setup time	T_{DINCSU}	0.115	—	0.135	—	ns
Write input data hold time	T_{DINCHD}	0.15	—	0.177	—	ns
Write address setup time	$T_{ADDRCSU}$	0.088	—	0.104	—	ns
Write address hold time	$T_{ADDRCHD}$	0.128	—	0.15	—	ns
Write enable setup time	T_{WECSU}	0.397	—	0.467	—	ns
Write enable hold time	T_{WECHD}	–0.026	—	–0.03	—	ns
Maximum frequency	F_{MAX}	—	250	—	250	MHz

© 2026 Microchip Technology Inc. and its subsidiaries

The following table lists the µSRAM in 128 × 8 mode in worst commercial-case conditions when T_J = 85 °C, V_{DD} = 1.14V.

TABLE 3-238: MSRAM (RAM128X8) IN 128 × 8 MODE

Parameter	Symbol	–1		–Std		Unit
		Min.	Max.	Min.	Max.	
Read clock period	T_{CY}	4	—	4	—	ns
Read clock minimum pulse width high	$T_{CLKMPWH}$	1.8	—	1.8	—	ns
Read clock minimum pulse width low	$T_{CLKMPWL}$	1.8	—	1.8	—	ns
Read pipeline clock period	T_{PLCY}	4	—	4	—	ns
Read pipeline clock minimum pulse width high	$T_{PLCLKMPWH}$	1.8	—	1.8	—	ns
Read pipeline clock minimum pulse width low	$T_{PLCLKMPWL}$	1.8	—	1.8	—	ns
Read access time with pipeline register	T_{CLK2Q}	—	0.266		0.313	ns
Read access time without pipeline register		—	1.677		1.973	ns
Read address setup time in synchronous mode	T_{ADDRSU}	0.301	—	0.354	—	ns
Read address setup time in asynchronous mode		1.856	—	2.184	—	ns
Read address hold time in synchronous mode	T_{ADDRHD}	0.091	—	0.107	—	ns
Read address hold time in asynchronous mode		–0.778	—	–0.915	—	ns
Read enable setup time	T_{RDENSU}	0.278	—	0.327	—	ns
Read enable hold time	T_{RDENHD}	0.057	—	0.067	—	ns
Read block select setup time	T_{BLKSU}	1.839	—	2.163	—	ns
Read block select hold time	T_{BLKHD}	–0.65	—	–0.765	—	ns
Read block select to out disable time (when pipelined register is disabled)	T_{BLK2Q}	—	2.036	—	2.396	ns
Read asynchronous reset removal time (pipelined clock)	T_{RSTREM}	–0.023	—	–0.027	—	ns
Read asynchronous reset removal time (non-pipelined clock)		0.046	—	0.054	—	ns
Read asynchronous reset recovery time (pipelined clock)	T_{RSTREC}	0.507	—	0.597	—	ns
Read asynchronous reset recovery time (non-pipelined clock)		0.236	—	0.278	—	ns
Read asynchronous reset to output propagation delay (with pipelined register enabled)	T_{R2Q}	—	0.835	—	0.982	ns
Read synchronous reset setup time	T_{SRSTSU}	0.271	—	0.319	—	ns
Read synchronous reset hold time	T_{SRSTHD}	0.061	—	0.071	—	ns
Write clock period	T_{CCY}	4	—	4	—	ns
Write clock minimum pulse width high	$T_{CCLKMPWH}$	1.8	—	1.8	—	ns
Write clock minimum pulse width low	$T_{CCLKMPWL}$	1.8	—	1.8	—	ns
Write block setup time	T_{BLKCSU}	0.404	—	0.476	—	ns
Write block hold time	T_{BLKCHD}	0.007	—	0.008	—	ns
Write input data setup time	T_{DINCSU}	0.115	—	0.135	—	ns
Write input data hold time	T_{DINCHD}	0.15	—	0.177	—	ns
Write address setup time	$T_{ADDRCSU}$	0.088	—	0.104	—	ns
Write address hold time	$T_{ADDRCHD}$	0.128	—	0.15	—	ns
Write enable setup time	T_{WECSU}	0.397	—	0.467	—	ns
Write enable hold time	T_{WECHD}	–0.026	—	–0.03	—	ns
Maximum frequency	F_{MAX}	—	250	—	250	MHz

The following table lists the µSRAM in 256 × 4 mode in worst commercial-case conditions when T_J = 85 °C, V_{DD} = 1.14V.

TABLE 3-239: MSRAM (RAM256X4) IN 256 × 4 MODE

Parameter	Symbol	–1		–Std		Unit
		Min.	Max.	Min.	Max.	
Read clock period	T_{CY}	4	—	4	—	ns
Read clock minimum pulse width high	$T_{CLKMPWH}$	1.8	—	1.8	—	ns
Read clock minimum pulse width low	$T_{CLKMPWL}$	1.8	—	1.8	—	ns
Read pipeline clock period	T_{PLCY}	4	—	4	—	ns
Read pipeline clock minimum pulse width high	$T_{PLCLKMPWH}$	1.8	—	1.8	—	ns
Read pipeline clock minimum pulse width low	$T_{PLCLKMPWL}$	1.8	—	1.8	—	ns
Read access time with pipeline register	T_{CLK2Q}	—	0.27	—	0.31	ns
Read access time without pipeline register		—	1.75	—	2.06	ns
Read address setup time in synchronous mode	T_{ADDRSU}	0.301	—	0.354	—	ns
Read address setup time in asynchronous mode		1.931	—	2.272	—	ns
Read address hold time in synchronous mode	T_{ADDRHD}	0.121	—	0.142	—	ns
Read address hold time in asynchronous mode		–0.65	—	–0.76	—	ns
Read enable setup time	T_{RDENSU}	0.278	—	0.327	—	ns
Read enable hold time	T_{RDENHD}	0.057	—	0.067	—	ns
Read block select setup time	T_{BLKSU}	1.839	—	2.163	—	ns
Read block select hold time	T_{BLKHD}	–0.65	—	–0.77	—	ns
Read block select to out disable time (when pipelined register is disabled)	T_{BLK2Q}	—	2.09	—	2.46	ns
Read asynchronous reset removal time (pipelined clock)	T_{RSTREM}	–0.02	—	–0.03	—	ns
Read asynchronous reset removal time (non-pipelined clock)		0.046	—	0.054	—	ns
Read asynchronous reset recovery time (pipelined clock)	T_{RSTREC}	0.507	—	0.597	—	ns
Read asynchronous reset recovery time (non-pipelined clock)		0.236	—	0.278	—	ns
Read asynchronous reset to output propagation delay (with pipelined register enabled)	T_{R2Q}	—	0.83		0.98	ns
Read synchronous reset setup time	T_{SRSTSU}	0.271	—	0.319	—	ns
Read synchronous reset hold time	T_{SRSTHD}	0.061	—	0.071	—	ns
Write clock period	T_{CCY}	4	—	4	—	ns
Write clock minimum pulse width high	$T_{CCLKMPWH}$	1.8	—	1.8	—	ns
Write clock minimum pulse width low	$T_{CCLKMPWL}$	1.8	—	1.8	—	ns
Write block setup time	T_{BLKCSU}	0.404	—	0.476	—	ns
Write block hold time	T_{BLKCHD}	0.007	—	0.008	—	ns
Write input data setup time	T_{DINCSU}	0.101	—	0.118	—	ns
Write input data hold time	T_{DINCHD}	0.137	—	0.161	—	ns
Write address setup time	$T_{ADDRCSU}$	0.088	—	0.104	—	ns
Write address hold time	$T_{ADDRCHD}$	0.245	—	0.288	—	ns
Write enable setup time	T_{WECSU}	0.397	—	0.467	—	ns
Write enable hold time	T_{WECHD}	–0.03	—	–0.03	—	ns
Maximum frequency	F_{MAX}	—	250	—	250	MHz

© 2026 Microchip Technology Inc. and its subsidiaries

The following table lists the µSRAM in 512 × 2 mode in worst commercial-case conditions when T_J = 85 °C, V_{DD} = 1.14V.

TABLE 3-240: MSRAM (RAM512X2) IN 512 × 2 MODE

Parameter	Symbol	–1		–Std		Unit
		Min.	Max.	Min.	Max.	
Read clock period	T_{CY}	4	—	4	—	ns
Read clock minimum pulse width high	$T_{CLKMPWH}$	1.8	—	1.8	—	ns
Read clock minimum pulse width low	$T_{CLKMPWL}$	1.8	—	1.8	—	ns
Read pipeline clock period	T_{PLCY}	4	—	4	—	ns
Read pipeline clock minimum pulse width high	$T_{PLCLKMPWH}$	1.8	—	1.8	—	ns
Read pipeline clock minimum pulse width low	$T_{PLCLKMPWL}$	1.8	—	1.8	—	ns
Read access time with pipeline register	T_{CLK2Q}	—	0.27	—	0.31	ns
Read access time without pipeline register		—	1.76	—	2.08	ns
Read address setup time in synchronous mode	T_{ADDRSU}	0.301	—	0.354	—	ns
Read address setup time in asynchronous mode		1.96	—	2.306	—	ns
Read address hold time in synchronous mode	T_{ADDRHD}	0.137	—	0.161	—	ns
Read address hold time in asynchronous mode		–0.58	—	–0.68	—	ns
Read enable setup time	T_{RDENSU}	0.278	—	0.327	—	ns
Read enable hold time	T_{RDENHD}	0.057	—	0.067	—	ns
Read block select setup time	T_{BLKSU}	1.839	—	2.163	—	ns
Read block select hold time	T_{BLKHD}	–0.65	—	–0.77	—	ns
Read block select to out disable time (when pipelined register is disabled)	T_{BLK2Q}	—	2.14	—	2.52	ns
Read asynchronous reset removal time (pipelined clock)	T_{RSTREM}	–0.02	—	–0.03	—	ns
Read asynchronous reset removal time (non-pipelined clock)		0.046	—	0.054	—	ns
Read asynchronous reset recovery time (pipelined clock)	T_{RSTREC}	0.507	—	0.597	—	ns
Read asynchronous reset recovery time (non-pipelined clock)		0.236		0.278		ns
Read asynchronous reset to output propagation delay (with pipelined register enabled)	T_{R2Q}	—	0.83	—	0.98	ns
Read synchronous reset setup time	T_{SRSTSU}	0.271	—	0.319	—	ns
Read synchronous reset hold time	T_{SRSTHD}	0.061	—	0.071	—	ns
Write clock period	T_{CCY}	4	—	4	—	ns
Write clock minimum pulse width high	$T_{CCLKMPWH}$	1.8	—	1.8	—	ns
Write clock minimum pulse width low	$T_{CCLKMPWL}$	1.8	—	1.8	—	ns
Write block setup time	T_{BLKCSU}	0.404	—	0.476	—	ns
Write block hold time	T_{BLKCHD}	0.007	—	0.008	—	ns
Write input data setup time	T_{DINCSU}	0.101	—	0.118	—	ns
Write input data hold time	T_{DINCHD}	0.137	—	0.161	—	ns
Write address setup time	$T_{ADDRCSU}$	0.088	—	0.104	—	ns
Write address hold time	$T_{ADDRCHD}$	0.247	—	0.29	—	ns
Write enable setup time	T_{WECSU}	0.397	—	0.467	—	ns
Write enable hold time	T_{WECHD}	–0.03	—	–0.03	—	ns
Maximum frequency	F_{MAX}	—	250	—	250	MHz

The following table lists the µSRAM in 1024 × 1 mode in worst commercial-case conditions when T_J = 85 °C, V_{DD} = 1.14V.

TABLE 3-241: MSRAM (RAM1024X1) IN 1024 × 1 MODE

Parameter	Symbol	–1		–Std		Unit
		Min.	Max.	Min.	Max.	
Read clock period	T_{CY}	4	—	4	—	ns
Read clock minimum pulse width high	$T_{CLKMPWH}$	1.8	—	1.8	—	ns
Read clock minimum pulse width low	$T_{CLKMPWL}$	1.8	—	1.8	—	ns
Read pipeline clock period	T_{PLCY}	4	—	4	—	ns
Read pipeline clock minimum pulse width high	$T_{PLCLKMPWH}$	1.8	—	1.8	—	ns
Read pipeline clock minimum pulse width low	$T_{PLCLKMPWL}$	1.8	—	1.8	—	ns
Read access time with pipeline register	T_{CLK2Q}	—	0.27	—	0.31	ns
Read access time without pipeline register		—	1.78	—	2.1	ns
Read address setup time in synchronous mode	T_{ADDRSU}	0.301	—	0.354	—	ns
Read address setup time in asynchronous mode		1.978	—	2.327	—	ns
Read address hold time in synchronous mode	T_{ADDRHD}	0.137	—	0.161	—	ns
Read address hold time in asynchronous mode		–0.6	—	–0.71	—	ns
Read enable setup time	T_{RDENSU}	0.278	—	0.327	—	ns
Read enable hold time	T_{RDENHD}	0.057	—	0.067	—	ns
Read block select setup time	T_{BLKSU}	1.839	—	2.163	—	ns
Read block select hold time	T_{BLKHD}	–0.65		–0.77	—	ns
Read block select to out disable time (when pipelined register is disabled)	T_{BLK2Q}	—	2.16	—	2.54	ns
Read asynchronous reset removal time (pipelined clock)	T_{RSTREM}	–0.02	—	–0.03	—	ns
Read asynchronous reset removal time (non-pipelined clock)		0.046	—	0.054	—	ns
Read asynchronous reset recovery time (pipelined clock)	T_{RSTREC}	0.507	—	0.597	—	ns
Read asynchronous reset recovery time (non-pipelined clock)		0.236	—	0.278	—	ns
Read asynchronous reset to output propagation delay (with pipelined register enabled)	T_{R2Q}	—	0.83	—	0.98	ns
Read synchronous reset setup time	T_{SRSTSU}	0.271	—	0.319	—	ns
Read synchronous reset hold time	T_{SRSTHD}	0.061	—	0.071	—	ns
Write clock period	T_{CCY}	4	—	4	—	ns
Write clock minimum pulse width high	$T_{CCLKMPWH}$	1.8	—	1.8	—	ns
Write clock minimum pulse width low	$T_{CCLKMPWL}$	1.8	—	1.8	—	ns
Write block setup time	T_{BLKCSU}	0.404	—	0.476	—	ns
Write block hold time	T_{BLKCHD}	0.007	—	0.008	—	ns
Write input data setup time	T_{DINCSU}	0.003	—	0.004	—	ns
Write input data hold time	T_{DINCHD}	0.137	—	0.161	—	ns
Write address setup time	$T_{ADDRCSU}$	0.088	—	0.104	—	ns
Write address hold time	$T_{ADDRCHD}$	0.247	—	0.29	—	ns
Write enable setup time	T_{WECSU}	0.397	—	0.467	—	ns
Write enable hold time	T_{WECHD}	–0.03	—	–0.03	—	ns
Maximum frequency	F_{MAX}	—	250	—	250	MHz

© 2026 Microchip Technology Inc. and its subsidiaries

3.13 Programming Times

The following table lists the programming times in typical conditions when TJ = 25 °C, V_{DD} = 1.2V. External SPI flash part# AT25DF641-s3H is used during this measurement.

TABLE 3-242: PROGRAMMING TIMES (TYPICAL CONDITIONS)

											Auto Programming	Auto Update	Programming Recovery	
			JTAG Programming		2 Step IAP Programming			MSS/Cortex-M3 ISP Programming (SmartFusion 2 Only)			SPI CLK = 100 KHz	SPI CLK = 12.5 MHz	SPI CLK = 12.5 MHz	
	Device	Image Size Bytes	Program	Verify	Authenticate	Program	Verify	Authenticate	Program	Verify	Program	Program	Program	Units
Fabric Only	005	302,672	22	10	4	17	6	6	19	8	47	28	28	Sec
	010	568,784	28	18	7	23	12	10	26	14	77	35	35	Sec
	025	1,223,504	51	26	14	33	23	21	39	29	150	41	41	Sec
	050	2,424,832	66	54	29	52	40	39	60	50	33[1]	Not Supported		Sec
	060	2,418,896	77	54	39	61	50	44	65	54	291	82	82	Sec
	090	3,645,968	113	126	60	84	73	66	90	79	427	108	108	Sec
	150	6,139,184	155	193	100	132	120	108	140	128	708	160	160	Sec
eNVM Only	005	137,536	39	4	2	37	5	3	42	4	41	49	49	Sec
	010	274,816	78	9	4	76	11	4	82	7	86	87	87	Sec
	025	274,816	78	9	4	78	10	4	82	8	87	86	86	Sec
	050	278,528	84	8	3	85	9	4	80	8	85	Not Supported		Sec
	060	268,480	76	8	5	76	22	6	80	8	78	86	86	Sec
	090	544,496	154	15	10	152	43	10	157	15	154	162	162	Sec
	150	544,496	155	15	10	153	44	10	158	15	161	161	161	Sec
Fabric and eNVM	005	439,296	59	11	6	56	11	9	61	11	87	66	66	Sec
	010	842,688	107	20	11	100	21	15	107	21	161	113	113	Sec
	025	1,497,408	120	35	19	113	32	26	121	35	229	121	121	Sec
	050	2,695,168	162	59	32	136	48	43	141	55	112	Not Supported		Sec
	060	2,686,464	158	70	43	137	70	48	143	60	368	158	158	Sec
	090	4,190,208	266	147	68	236	115	75	244	91	582	260	260	Sec
	150	6,682,768	316	231	109	286	162	117	296	141	867	310	310	Sec

1 Auto Programming in 050 device is done through SC_SPI, and SPI CLK is set to 6.25 MHz.

2: These programming methods only support programming action.

The following table lists the programming times in worst-case conditions when T_J = 100 °C, V_{DD} = 1.14V. External SPIflash part# AT25DF641-s3H is used during this measurement.

3.14 Math Block Timing Characteristics

The fundamental building block in any digital signal processing algorithm is the multiply-accumulate function. Each IGLOO 2 and SmartFusion 2 SoC math block supports 18×18 signed multiplication, dot product, and built-in addition, subtraction, and accumulation units to combine multiplication results efficiently. The following table lists the math blocks with all registers used in worst commercial-case conditions when T_J = 85 °C and V_{DD} = 1.14V.

TABLE 3-243: MATH BLOCKS WITH ALL REGISTERS USED

Parameter	Symbol	–1		–Std		Unit
		Min.	Max.	Min.	Max.	
Input, control register setup time	T_{MISU}	0.149	—	0.176	—	ns
Input, control register hold time	T_{MIHD}	1.68	—	1.976	—	ns
CDIN input setup time	$T_{MOCDINSU}$	0.185	—	0.218	—	ns
CDIN input hold time	$T_{MOCDINHD}$	0.08	—	0.094	—	ns
Synchronous reset/enable setup time	$T_{MSRSTENSU}$	–0.419	—	–0.493	—	ns
Synchronous reset/enable hold time	$T_{MSRSTENHD}$	0.011	—	0.013	—	ns
Asynchronous reset removal time	$T_{MARSTREM}$	0	—	0	—	ns
Asynchronous reset recovery time	$T_{MARSTREC}$	0.088		0.104	—	ns
Output register clock to out delay	T_{MOCQ}	—	0.232		0.273	ns
CLK minimum period	T_{MCLKMP}	2.245	—	2.641	—	ns

The following table lists the math blocks with input bypassed and output registers used in worst commercial-case conditions when T_J = 85 °C and V_{DD} = 1.14 V.

TABLE 3-244: MATH BLOCK WITH INPUT BYPASSED AND OUTPUT REGISTERS USED

Parameter	Symbol	–1		–Std		Unit
		Min.	Max.	Min.	Max.	
Output register setup time	T_{MOSU}	2.294	—	2.699	—	ns
Output register hold time	T_{MOHD}	1.68	—	1.976	—	ns
CDIN input setup time	$T_{MOCDINSU}$	0.115	—	0.136	—	ns
CDIN input hold time	$T_{MOCDINHD}$	–0.444	—	–0.522	—	ns
Synchronous reset/enable setup time	$T_{MSRSTENSU}$	–0.419	—	–0.493	—	ns
Synchronous reset/enable hold time	$T_{MSRSTENHD}$	0.011	—	0.013	—	ns
Asynchronous reset removal time	$T_{MARSTREM}$	0	—	0	—	ns
Asynchronous reset recovery time	$T_{MARSTREC}$	0.014	—	0.017	—	ns
Output register clock to out delay	T_{MOCQ}	—	0.232		0.273	ns
CLK minimum period	T_{MCLKMP}	2.179	—	2.563	—	ns

The following table lists the math blocks with input register used and output in bypass mode in worst commercial-case conditions when T_J = 85 °C and V_{DD} = 1.14V.

TABLE 3-245: MATH BLOCK WITH INPUT REGISTER USED AND OUTPUT IN BYPASS MODE

Parameter	Symbol	–1		–Std		Unit
		Min.	Max.	Min.	Max.	

© 2026 Microchip Technology Inc. and its subsidiaries

TABLE 3-245: MATH BLOCK WITH INPUT REGISTER USED AND OUTPUT IN BYPASS MODE

Input register setup time	T_{MISU}	0.149	—	0.176	—	ns
Input register hold time	T_{MIHD}	0.185	—	0.218	—	ns
Synchronous reset/enable setup time	$T_{MSRSTENSU}$	0.08	—	0.094	—	ns
Synchronous reset/enable hold time	$T_{MSRSTENHD}$	–0.012	—	–0.014	—	ns
Asynchronous reset removal time	$T_{MARSTREM}$	–0.005	—	–0.005	—	ns
Asynchronous reset recovery time	$T_{MARSTREC}$	0.088	—	0.104	—	ns
Input register clock to output delay	T_{MICQ}	—	2.52	—	2.964	ns
CDIN to output delay	$T_{MCDIN2Q}$	—	1.951	—	2.295	ns

The following table lists the math blocks with input and output in bypass mode in worst commercial-case conditions when T_J = 85 °C and V_{DD} = 1.14 V.

TABLE 3-246: MATH BLOCK WITH INPUT AND OUTPUT IN BYPASS MODE

Parameter	Symbol	–1	–Std	Unit
		Max.	Max.	
Input to output delay	T_{MIQ}	2.568	3.022	ns
CDIN to output delay	$T_{MCDIN2Q}$	1.951	2.295	ns

3.15 Embedded NVM (eNVM) Characteristics

The following table lists the eNVM read performance in worst-case conditions, when V_{DD} = 1.14 V and V_{PPNVM} = V_{PP} = 2.375V.

TABLE 3-247: ENVM READ PERFORMANCE

Symbol	Description	Operating Temperature Range						Unit
		–1	–Std	–1	–Std	–1	–Std	
T_J	Junction temperature range	–55 °C to 125 °C		–40 °C to 100 °C		0 °C to 85 °C		°C
$F_{MAXREAD}$	eNVM maximum read frequency	25	25	25	25	25	25	MHz

The following table lists the eNVM page programming in worst-case conditions when V_{DD} = 1.14 V and V_{PPNVM} = V_{PP} = 2.375V.

TABLE 3-248: ENVM PAGE PROGRAMMING

Symbol	Description	Operating Temperature Range						Unit
		–1	–Std	–1	–Std	–1	–Std	
T_J	Junction temperature range	–55 °C to 125 °C		–40 °C to 100 °C		0 °C to 85 °C		°C
$T_{PAGEPGM}$	eNVM page programming time	40	40	40	40	40	40	ms

3.16 SRAM PUF

For more details on static random-access memory (SRAM) physical unclonable functions (PUF) services, see https://www.microchip.com/en-us/products/fpgas-and-plds/fpgas/igloo-2-fpgas#Documentation.

The following table lists the SRAM PUF in worst-case industrial conditions when T_J = 100 °C and V_{DD} = 1.14V.

TABLE 3-249: SRAM PUF

Service	PUF Off		PUF On		Unit
	Typ.	Max.	Typ.	Max.	
Create activation code	709.1	746.4	754.4	762.5	ms
Delete activation code	1329.3	1399.3	1414.1	1429.3	ms

TABLE 3-249: SRAM PUF (CONTINUED)

Service	PUF Off		PUF On		Unit
	Typ.	Max.	Typ.	Max.	
Create intrinsic keycode	656.6	691.1	698.5	706.0	ms
Create extrinsic keycode	656.6	691.1	698.5	706.0	ms
Get number of keys	1.3	1.4	1.4	1.4	ms
Export (Kc0, Kc1)	998.0	1050.5	1061.7	1073.1	ms
Export 2 keycodes	2020.2	2126.5	2149.2	2172.3	ms
Export 4 keycodes	3065.7	3227.0	3261.3	3296.4	ms
Export 8 keycodes	5101.0	5369.5	5426.6	5485.0	ms
Export 16 keycodes	9212.1	9697.0	9800.1	9905.5	ms
Import (Kc0, Kc1)	39.7	41.8	42.2	42.7	ms
Import 2 keycodes	50.1	52.7	53.3	53.9	ms
Import 4 keycodes	60.6	63.8	64.5	65.2	ms
Import 8 keycodes	80.9	85.1	86.1	87.0	ms
Import 16 keycodes	123.8	130.4	131.7	133.2	ms
Delete keycode	552.5	581.6	587.8	594.1	ms
Fetch key	31.4	33.0	33.4	33.7	ms
Fetch ecc key	20.0	21.1	21.3	21.5	ms
Get seed	2.0	2.1	2.2	2.2	ms

Note: PUF On times are worst case because the PUF must be turned off for a minimum time before it is turned On to generate the appropriate entropy.

3.17 Non-Deterministic Random Bit Generator (NRBG) Characteristics

For more information about NRBG, see *AC407: Using NRBG Services in SmartFusion2 and IGLOO2 Devices Application Note.* The following table lists the NRBG in worst-case industrial conditions when T_J = 100 °C and V_{DD} = 1.14V.

TABLE 3-250: NON-DETERMINISTIC RANDOM BIT GENERATOR (NRBG)

Service	Timing	Unit	Conditions	
			Prediction Resistance	Additional Input
Instantiate	85	ms	OFF	X
Generate (after Instantiate)[1]	4.5 ms + (6.25 us/byte x No. of Bytes)	—	OFF	0
	6.0 ms + (6.25 us/byte x No. of Bytes)	—	OFF	64
	7.0 ms + (6.25 us/byte x No. of Bytes)	—	OFF	128
Generate (after Instantiate)	47	ms	ON	X
Generate (subsequent)[1]	0.5 ms + (6.25 us/byte x No. of Bytes)	—	OFF	0
	2.0 ms + (6.25 us/byte x No. of Bytes)	—	OFF	64
	3.0 ms + (6.25 us/byte x No. of Bytes)	—	OFF	128
Generate (subsequent)	43	ms	ON	X
Reseed	40	ms	—	
Uninstantiate	0.16	ms	—	
Reset	0.10	ms	—	

© 2026 Microchip Technology Inc. and its subsidiaries

TABLE 3-250: NON-DETERMINISTIC RANDOM BIT GENERATOR (NRBG) (CONTINUED)

Self-test	20	ms	First time after power-up
	6	ms	Subsequent

1 If PUF_OFF, generate will incur additional PUF delay time for consecutive service calls.

3.18 Cryptographic Block Characteristics

For more information about cryptographic block and associated services, see *AC410: Using AES System Services in SmartFusion2 and IGLOO2 Devices Application Note* and *AC432: Using SHA-256 System Services in SmartFusion2 and IGLOO2 Devices Application Note*.

The following table lists the cryptographic block characteristics in worst-case industrial conditions when T_J = 100 °C and V_{DD} = 1.14V.

TABLE 3-251: CRYPTOGRAPHIC BLOCK CHARACTERISTICS

Service	Conditions	Timing	Unit
Any service	First certificate check penalty at boot	11.5	ms
AES128/256 (encoding/decoding)[1]	100 blocks up to 64k blocks	700	Kbps
SHA256	512 bits	540	Kbps
	1024 bits	780	Kbps
	2048 bits	950	Kbps
	24 kbits	1140	Kbps
HMAC	512 bytes	820	Kbps
	1024 bytes	890	Kbps
	2048 bytes	930	Kbps
	24 kbytes	980	Kbps
KeyTree		1.8	ms
Challenge-response	PUF = OFF	25	ms
	PUF = ON	7	ms
ECC point multiplication	—	590	ms
ECC point addition	—	8	ms

1 Using Cypher Block Chaining (CBC) mode.

3.19 Crystal Oscillator

The following table lists electrical characteristics of the crystal oscillator in the IGLOO 2 FPGA and SmartFusion 2 SoC FPGAs.

TABLE 3-252: ELECTRICAL CHARACTERISTICS OF THE CRYSTAL OSCILLATOR—HIGH GAIN MODE (20 MHZ)

Parameter	Symbol	Min.	Typ.	Max.	Unit	Condition
Operating frequency	FXTAL	—	20	—	MHz	—
Accuracy	ACCXTAL	—	—	0.0047	%	005, 010, 025, 050, 060, and 090 devices
		—	—	0.0058	%	150 devices

TABLE 3-252: ELECTRICAL CHARACTERISTICS OF THE CRYSTAL OSCILLATOR—HIGH GAIN MODE (20 MHZ) (CONTINUED)

Parameter	Symbol	Min.	Typ.	Max.	Unit	Condition
Output duty cycle	CYCXTAL	—	49–51	47–53	%	—
Output period jitter (peak to peak)	JITPERXTAL	—	200	300	ps	—
Output cycle to cycle jitter (peak to peak)	JITCYCXTAL	—	200	300	ps	010, 025, 050, and 060 devices
		—	250	410	ps	150 devices
		—	250	550	ps	005 and 090 devices
Operating current	IDYNXTAL	—	1.5	—	mA	010, 050, and 060 devices
		—	1.65	—	mA	005, 025, 090, and 150 devices
Input logic level high	VIHXTAL	0.9 V_{PP}	—	—	V	—
Input logic level low	VILXTAL	—	—	0.1 V_{PP}	V	—
Startup time (regarding stable oscillator output)	SUXTAL	—	—	0.8	ms	005, 010, 025, and 050 devices
		—	—	1.0	ms	090 and 150 devices

TABLE 3-253: ELECTRICAL CHARACTERISTICS OF THE CRYSTAL OSCILLATOR—MEDIUM GAIN MODE (2 MHZ)

Parameter	Symbol	Min.	Typ.	Max.	Unit	Condition
Operating frequency	FXTAL	—	2	—	MHz	—
Accuracy	ACCXTAL	—	—	0.00105	%	050 devices
		—	—	0.003	%	005, 010, 025, 090, and 150 devices
		—		0.004	%	060 devices
Output duty cycle	CYCXTAL	—	49–51	47–53	%	—
Output period jitter (peak to peak)	JITPERXTAL	—	1	5	ns	—
Output cycle to cycle jitter (peak to peak)	JITCYCXTAL	—	1	5	ns	—
Operating current	IDYNXTAL	—	0.3	—	mA	—
Input logic level high	VIHXTAL	0.9 V_{PP}	—	—	V	—
Input logic level low	VILXTAL	—	—	0.1 V_{PP}	V	—
Startup time (regarding stable oscillator output)	SUXTAL	—	—	4.5	ms	010 and 050 devices
		—	—	5	ms	005 and 025 devices
		—	—	7	ms	090 and 150 devices

TABLE 3-254: ELECTRICAL CHARACTERISTICS OF THE CRYSTAL OSCILLATOR—LOW GAIN MODE (32 KHZ)

Parameter	Symbol	Min.	Typ.	Max.	Unit	Condition
Operating frequency	FXTAL	—	32	—	kHz	—
Accuracy	ACCXTAL	—	—	0.004	%	005, 010, 025, 050, 060, and 090 devices
		—	—	0.005	%	150 devices
Output duty cycle	CYCXTAL	—	49–51	47–53	%	—

© 2026 Microchip Technology Inc. and its subsidiaries

TABLE 3-254: ELECTRICAL CHARACTERISTICS OF THE CRYSTAL OSCILLATOR—LOW GAIN MODE (32 KHZ)

Output period jitter (peak to peak)	JITPERXTAL	—	150	300	ns	—
Output cycle to cycle jitter (peak to peak)	JITCYCXTAL	—	150	300	ns	—
Operating current	IDYNXTAL	—	0.044	—	mA	010 and 050 devices
		—	0.060	—	mA	005, 025, 060, 090, and 150 devices
Input logic level high	VIHXTAL	0.9 V_{PP}	—	—	V	—
Input logic level low	VILXTAL	—	—	0.1 V_{PP}	V	—
Startup time (regarding stable oscillator output)	SUXTAL	—	—	115	ms	005, 025, 050, 090, and 150 devices
		—	—	126	ms	010 devices

3.20 On-Chip Oscillator

The following tables list electrical characteristics of the available on-chip oscillators in the IGLOO 2 FPGAs and SmartFusion 2 SoC FPGAs.

TABLE 3-255: ELECTRICAL CHARACTERISTICS OF THE 50 MHZ RC OSCILLATOR

Parameter	Symbol	Typ.	Max.	Unit	Condition
Operating frequency	F50RC	50	—	MHz	—
Accuracy	ACC50RC	1	4	%	050 devices
		1	5	%	005, 025, and 060 devices
		1	6.3	%	090 devices
		1	7.1	%	010 and 150 devices
Output duty cycle	CYC50RC	49–51	46.5–53.5	%	—
Output jitter (peak to peak)	JIT50RC	—	—	—	Period Jitter
		200	300	ps	005, 010, 050, and 060 devices
		200	400	ps	150 devices
		300	500	ps	025 and 090 devices
		—	—	—	Cycle-to-Cycle Jitter
		200	300	ps	005 and 050 devices
		320	420	ps	010, 060, and 150 devices
		320	850	ps	025 and 090 devices
Operating current	IDYN50RC	6.5	—	mA	—

TABLE 3-256: ELECTRICAL CHARACTERISTICS OF THE 1 MHZ RC OSCILLATOR

Parameter	Symbol	Typ.	Max.	Unit	Condition
Operating frequency	F1RC	1	—	MHz	—
Accuracy	ACC1RC	1	3	%	005, 010, 025, and 050 devices
		1	4.5	%	060, and 150 devices
		1	5.6	%	090 devices
Output duty cycle	CYC1RC	49–51	46.5–53.5	%	005, 010, 025, 050, 090 and 150 devices
		49-51	46.0-54.0	%	060 devices

TABLE 3-256: ELECTRICAL CHARACTERISTICS OF THE 1 MHZ RC OSCILLATOR (CONTINUED)

Parameter	Symbol	Typ.	Max.	Unit	Condition
Output jitter (peak to peak)	JIT1RC	—	—	—	Period Jitter
		10	20	ns	005, 010, 025, and 050 devices
		10	28	ns	060, 090 and 150 devices
		—	—	—	Cycle-to-Cycle Jitter
		10	20	ns	005, 010, and 050 devices
		10	35	ns	025, 060, and 150 devices
		10	45	ns	090 devices
Operating current	IDYN1RC	0.1	—	mA	—
Startup time	SU1RC	—	17	µs	050, 090, and 150 devices
		—	18	µs	005, 010, and 025 devices

Note: Use of 1 MHz internal RC Oscillator as the reference clock for Fabric CCC is not recommended. The 50 MHz internal RC Oscillator must be used.

3.21 Clock Conditioning Circuits (CCC)

The following table lists the CCC/PLL specifications in worst-case industrial conditions when T_J = 100 °C and V_{DD} = 1.14V.

TABLE 3-257: IGLOO 2 AND SMARTFUSION 2 SOC FPGAS CCC/PLL SPECIFICATION

Parameter	Min	Typ.	Max.	Unit	Conditions
Clock conditioning circuitry input frequency F_{IN_CCC}	1	—	200	MHz	All CCC
	0.032	—	200	MHz	32 kHz capable CCC
Clock conditioning circuitry output frequency F_{OUT_CCC}[1]	0.078	—	400	MHz	—
PLL VCO frequency[2]	500	—	1000	MHz	—
Delay increments in programmable delay blocks	—	75	100	ps	—
Number of programmable values in each programmable delay block	—	—	64		—
Acquisition time	—	70	100	µs	$F_{IN} \geq 1$ MHz
	—	1	16	ms	F_{IN} = 32 kHz
Input duty cycle (reference clock)	—	—	—	—	Internal Feedback
	10	—	90	%	1 MHz ≤ F_{IN_CCC} ≤ 25 MHz
	25	—	75	%	25 MHz ≤ F_{IN_CCC} ≤ 100 MHz
	35	—	65	%	100 MHz ≤ F_{IN_CCC} ≤ 150 MHz
	45	—	55	%	150 MHz ≤ F_{IN_CCC} ≤ 200 MHz
	—	—	—	—	External Feedback (CCC, FPGA, Off-Chip)
	25	—	75	%	1 MHz ≤ F_{IN_CCC} ≤ 25 MHz
	35	—	65	%	25 MHz ≤ F_{IN_CCC} ≤ 35 MHz
	45	—	55	%	35 MHz ≤ F_{IN_CCC} ≤ 50 MHz

© 2026 Microchip Technology Inc. and its subsidiaries

TABLE 3-257: IGLOO 2 AND SMARTFUSION 2 SOC FPGAS CCC/PLL SPECIFICATION

Parameter	Min	Typ.	Max.	Unit	Conditions
Output duty cycle	48	—	52	%	050 devices $F_{OUT} \leq 400$ MHz
	48	—	52	%	005, 010, and 025 devices $F_{OUT} < 350$ MHz
	46	—	54	%	005, 010, and 025 devices 350 MHz ≤ $F_{out} \leq 400$ MHz
	48	—	52	%	060 and 090 devices $F_{OUT} \leq 100$ MHz
	44	—	52	%	060 and 090 devices 100 MHz ≤ $F_{OUT} \leq 400$ MHz
	48	—	52	%	150 devices $F_{OUT} \leq 120$ MHz
	45	—	52	%	150 devices 120 MHz ≤ $F_{OUT} \leq 400$ MHz
PLL_ARST_N pulse width	1	—	—	—	µs
Spread Spectrum Characteristics					
Modulation frequency range	25	35	50	k	—
Modulation depth range	0		1.5	%	—
Modulation depth control	—	0.5	—	%	—

1 The minimum output clock frequency is limited by the PLL. For more information, see *UG0449: SmartFusion2 and IGLOO2 Clocking Resources User Guide*.

2 The PLL is used in conjunction with the Clock Conditioning Circuitry. Performance is limited by the CCC output frequency.

The following table lists the CCC/PLL jitter specifications in worst-case industrial conditions when T_J = 100 °C and V_{DD} = 1.14V.

TABLE 3-258: IGLOO 2 AND SMARTFUSION 2 SOC FPGAS CCC/PLL JITTER SPECIFICATIONS

CCC Output Maximum Peak-to-Peak Period Jitter F_{OUT_CCC}						
Parameter	**Conditions/Package Combinations**					**Unit**
10 FG484, 050 FG896/ FG484/FCS325 Packages[1]	SSO = 0	0 < SSO ≤ 2	SSO ≤ 4	SSO ≤ 8	SSO ≤ 16	
20 MHz to 100 MHz	Max. (110, ±1% x (1/F_{OUT_CCC}))	Max. (150, ±1% x (1/F_{OUT_CCC}))				ps
100 MHz to 400 MHz	Max. (120, ±1% x (1/F_{OUT_CCC}))	Max. (150, ±1% x (1/F_{OUT_CCC}))			Max. (170, ±1% x (1/F_{OUT_CCC}))	ps
025 FG484/FCS325 Package[1]	0 < SSO ≤ 16					
20 MHz to 74 MHz	±1% x (1/F_{OUT_CCC}))					ps
74 MHz to 400 MHz	210					ps
005 FG484 Package[1]	0 < SSO ≤ 16					
20 MHz to 53 MHz	±1% x (1/F_{OUT_CCC}))					ps
53 MHz to 400 MHz	270					ps
090 FG676 and FC325 Package[1]	0 < SSO ≤ 16					
20 MHz to 100 MHz	±1% x (1/F_{OUT_CCC}))					ps

TABLE 3-258: IGLOO 2 AND SMARTFUSION 2 SOC FPGAS CCC/PLL JITTER SPECIFICATIONS

CCC Output Maximum Peak-to-Peak Period Jitter F_{OUT_CCC}		
Parameter	**Conditions/Package Combinations**	**Unit**
100 MHz to 400 MHz	150	ps
060 FG676 Package[1]	0 < SSO ≤ 16	
20 MHz to 100 MHz	±1% x (1/F_{OUT_CCC})	ps
100 MHz to 400 MHz	150	
150 FC1152 Package[1]	0 < SSO ≤ 16	
20 MHz to 100 MHz	±1% x (1/F_{OUT_CCC}))	ps
100 MHz to 400 MHz	120	ps

1 SSO data is based on LVCMOS 2.5V MSIO and/or MSIOD bank I/Os.

© 2026 Microchip Technology Inc. and its subsidiaries

3.22 JTAG

TABLE 3-259: JTAG 1532 FOR 005, 010, 025, AND 050 DEVICES

Parameter	Symbol	005		010		025		050		Unit
		–1	–Std	–1	–Std	–1	–Std	–1	–Std	
Clock to Q (data out)	T_{TCK2Q}	7.47	8.79	7.73	9.09	7.75	9.12	7.89	9.28	ns
Reset to Q (data out)	T_{RSTB2Q}	7.65	9	6.43	7.56	6.13	7.21	7.40	8.70	ns
Test data input setup time	T_{DISU}	–1.05	–0.89	–0.69	–0.59	–0.67	–0.57	–0.30	–0.25	ns
Test data input hold time	T_{DIHD}	2.38	2.8	2.38	2.8	2.42	2.85	2.09	2.45	ns
Test mode select setup time	T_{TMSSU}	–0.73	–0.62	–1.03	–1.21	–1.1	–0.94	0.28	0.33	ns
Test mode select hold time	T_{TMDHD}	1.36	1.6	1.43	1.68	1.93	2.27	0.16	0.19	ns
ResetB removal time	$T_{TRSTREM}$	–0.77	–0.65	–1.08	–0.92	–1.33	–1.13	–0.45	–0.38	ns
ResetB recovery time	$T_{TRSTREC}$	–0.76	–0.65	–1.07	–0.91	–1.34	–1.14	–0.45	–0.38	ns
TCK maximum frequency	F_{TCKMAX}	25	21.25	25	21.25	25	21.25	25.00	21.25	MHz

TABLE 3-260: JTAG 1532 FOR 060, 090, AND 150 DEVICES

Parameter	Symbol	060		090		150		Unit
		–1	–Std	–1	–Std	–1	–Std	
Clock to Q (data out)	T_{TCK2Q}	8.38	9.86	8.96	10.54	8.66	10.19	ns
Reset to Q (data out)	T_{RSTB2Q}	8.54	10.04	7.75	9.12	8.79	10.34	ns
Test data input setup time	T_{DISU}	–1.18	–1	–1.31	–1.11	–0.96	–0.82	ns
Test data input hold time	T_{DIHD}	2.52	2.97	2.68	3.15	2.57	3.02	ns
Test mode select setup time	T_{TMSSU}	–0.97	–0.83	–1.02	–0.87	–0.53	–0.45	ns
Test mode select hold time	T_{TMDHD}	1.7	2	1.67	1.96	1.02	1.2	ns
ResetB removal time	$T_{TRSTREM}$	–1.21	–1.03	–0.76	–0.65	–1.03	–0.88	ns
ResetB recovery time	$T_{TRSTREC}$	–1.21	–1.03	–0.77	–0.65	–1.03	–0.88	ns
TCK maximum frequency	F_{TCKMAX}	25	21.25	25	21.25	25	21.25	MHz

Note: The JTAG IOs are LVCMOS/LVTTL IOs (TMS, TRSTB, TDI, TCK, and TDO). The JTAG IOs are powered by V_{DDI} of the Bank they are located in.

3.23 System Controller SPI Characteristics

The following table lists the system controller characteristics in worst-case industrial conditions when T_J = 100 °C and V_{DD} = 1.14V. For timing parameter, see Figure 3-22.

TABLE 3-261: SYSTEM CONTROLLER SPI CHARACTERISTICS FOR ALL DEVICES

Symbol	Description	Conditions	Min.	Typ.	Max.	Unit
sp1	SC_SPI_SCK minimum period	—	20	—	—	ns
sp2	SC_SPI_SCK minimum pulse width high	—	10	—	—	ns
sp3	SC_SPI_SCK minimum pulse width low	—	10	—	—	ns
sp4[1]	SC_SPI_SCK, SC_SPI_SDO, SC_SPI_SS rise time (10%–90%) 1	I/O configuration: LVTTL 3.3V–20 mA AC loading: 35 pF Test conditions: Typical voltage, 25 °C	—	1.239	—	ns
sp5[1]	SC_SPI_SCK, SC_SPI_SDO, SC_SPI_SS fall time (10%–90%) 1	I/O configuration: LVTTL 3.3V–20 mA AC loading: 35 pF Test conditions: Typical voltage, 25 °C	—	1.245	—	ns
sp6	SC_SPI_SDO setup time	—	(SC_SPI_LK _period/2)-14	—	—	ns
sp7	SC_SPI_SDO hold time	—	(SC_SPI_LK _period/2)-1	—	—	ns
sp8	SC_SPI_SDI setup time	—	4	—	—	ns
sp9	SC_SPI_SDI hold time	—	6	—	—	ns
Delay on SC_SPI_SDO after SC_SPI_SS is de-asserted when using SPI slave programming.[2]					265	ns

1 For specific Rise/Fall Times, board design considerations and detailed output buffer resistances, use the corresponding IBIS models located on the Microchip FPGA Products Group website:

For IGLOO 2: https://www.microchip.com/en-us/products/fpgas-and-plds/fpgas/igloo-2-fpgas#Documentation.

For SmartFusion 2: https://www.microchip.com/en-us/products/fpgas-and-plds/system-on-chip-fpgas/smartfusion-2-fpgas#Documentation

Use the supported I/O Configurations for the System Controller SPI in the following table.

2. SC_SPI_SDO becomes tri-stated after SC_SPI_SS is de-asserted.

TABLE 3-262: SUPPORTED I/O CONFIGURATIONS FOR SYSTEM CONTROLLER SPI (FOR MSIO BANK ONLY)

Voltage Supply	I/O Drive Configuration	Unit
3.3V	20	mA
2.5V	16	mA
1.8V	12	mA
1.5V	8	mA
1.2V	4	mA

© 2026 Microchip Technology Inc. and its subsidiaries

3.24 Power-up to Functional Times

The following table lists power-up to functional times in worst-case industrial conditions when T_J = 100 °C, V_{DD} = 1.14V.

TABLE 3-263: POWER-UP TO FUNCTIONAL TIMES WHEN MSS/HPMS IS USED

Symbol	From	To	Description	Maximum Power-up to Functional Time (µS)						
				005	010	025	050	060	090	150
$T_{POR2OUT}$	POWER_ON_RESET_N	Output available at I/O	Fabric to output	647	500	531	483	474	524	647
$T_{POR2MSSRST}$	POWER_ON_RESET_N	MSS_RESET_N_M2F	Fabric to MSS	644	497	528	480	468	518	641
$T_{MSSRST2OUT}$	MSS_RESET_N_M2F	Output available at I/O	MSS to output	3.6	3.6	3.6	3.4	4.9	4.8	4.8
$T_{VDD2OUT}$	V_{DD}	Output available at I/O	V_{DD} at its minimum threshold level to output	3096	2975	3012	2959	2869	2992	3225
$T_{VDD2POR}$	V_{DD}	POWER_ON_RESET_N	V_{DD} at its minimum threshold level to fabric	2476	2487	2496	2486	2406	2563	2602
$T_{VDD2MSSRST}$	V_{DD}	MSS_RESET_N_M2F	V_{DD} at its minimum threshold level to MSS	3093	2972	3008	2956	2864	2987	3220
$T_{VDD2WPU}$	DEVRST_N	DDRIO Inbuf weak pull	DEVRST_N to Inbuf weak pull	2500	2487	2509	2475	2507	2519	2617
	DEVRST_N	MSIO Inbuf weak pull	DEVRST_N to Inbuf weak pull	2504	2491	2510	2478	2517	2525	2620
	DEVRST_N	MSIOD Inbuf weak pull	DEVRST_N to Inbuf weak pull	2479	2468	2493	2458	2486	2499	2595

Note: For more information about power-up times, see *UG0331: SmartFusion2 Microcontroller Subsystem User Guide* and *UG0448: IGLOO2 FPGA High Performance Memory Subsystem User Guide*.

FIGURE 3-17: POWER-UP TO FUNCTIONAL TIMING DIAGRAM FOR SMARTFUSION 2

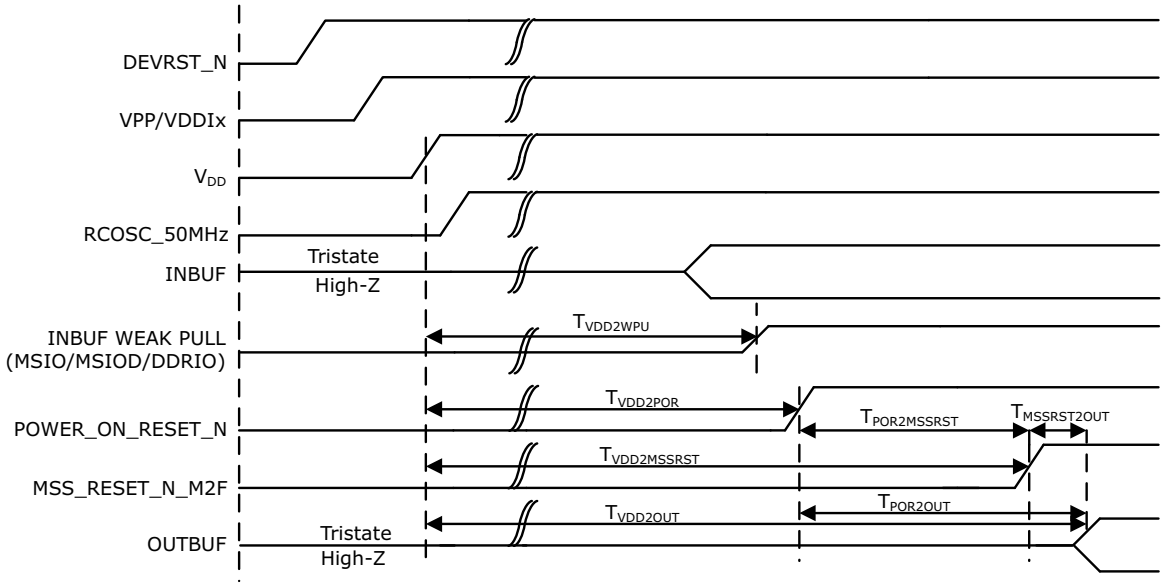

The following table lists power-up to functional times in worst-case industrial conditions when T_J = 100 °C and V_{DD} = 1.14V.

TABLE 3-264: POWER-UP TO FUNCTIONAL TIMES WHEN MSS/HPMS IS NOT USED

Symbol	From	To	Description	Maximum Power-up to Functional Time (µS)						
				005	010	025	050	060	090	150
$T_{POR2OUT}$	POWER_ON_RESET_N	Output available at I/O	Fabric to output	114	114	114	113	114	114	114
$T_{VDD2OUT}$	V_{DD}	Output available at I/O	V_{DD} at its minimum threshold level to output	2587	2600	2607	2558	2591	2600	2699
$T_{VDD2POR}$	V_{DD}	POWER_ON_RESET_N	V_{DD} at its minimum threshold level to fabric	2474	2486	2493	2445	2477	2486	2585
$T_{VDD2WPU}$	DEVRST_N	DDRIO Inbuf weak pull	DEVRST_N to Inbuf weak pull	2500	2487	2509	2475	2507	2519	2617
	DEVRST_N	MSIO Inbuf weak pull	DEVRST_N to Inbuf weak pull	2504	2491	2510	2478	2517	2525	2620
	DEVRST_N	MSIOD Inbuf weak pull	DEVRST_N to Inbuf weak pull	2479	2468	2493	2458	2486	2499	2595

Note: For more information about power-up times, see *UG0448: IGLOO2 FPGA High Performance Memory Subsystem User Guide* and *UG0331: SmartFusion2 Microcontroller Subsystem User Guide*.

© 2026 Microchip Technology Inc. and its subsidiaries

FIGURE 3-18: POWER-UP TO FUNCTIONAL TIMING DIAGRAM FOR IGLOO 2

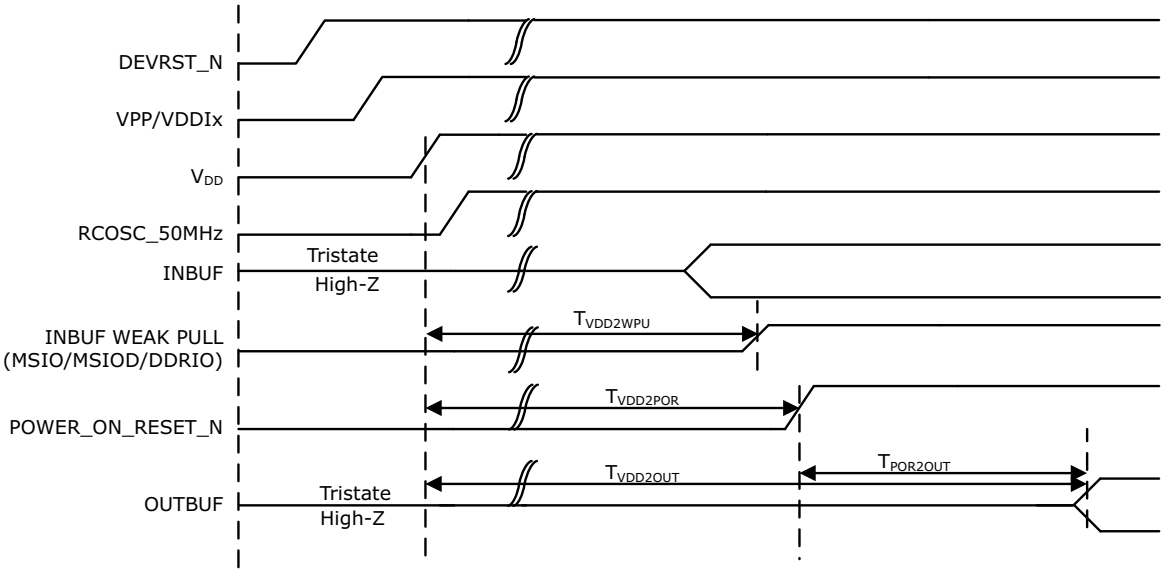

3.25 DEVRST_N Characteristics

TABLE 3-265: DEVRST_N CHARACTERISTICS FOR ALL DEVICES

Parameter	Symbol	Min.	Typ.	Max.	Unit
TRAMPDEVRSTN	DEVRST_N ramp time (10% to 90%)	—	—	1	µs
FMAXPDEVRSTN	DEVRST_N cycling rate	—	—	100	kHz
MPWDEVRSTN	DEVRST_N pulse width	1	—	—	µs

TABLE 3-266: DEVICE RESET PIN TYPES AND DESCRIPTIONS

Pin	Type	Description	Unused Conditions
Device Reset I/Os			
DEVRST_N	Input	Device reset; active low and powered by V_{PP}. It is an asynchronous signal and Schmitt trigger input with the maximum slew rate must not exceed 1 µs. When DEVRST_N is asserted, all user IOs are fully tri-stated. In unused condition, pull up to V_{PP} through 10 k resistor. Use the 3.3V I/O standards specification. Any of the 3.3V I/O standards, for example, LVTTL/LVCMOS is applicable for DEVRST.	Pull-up to V_{PP} through a 10 k resistor.

3.26 DEVRST_N to Functional Times

The following table lists the DEVRST_N to functional times in worst-case industrial conditions when T_J = 100 °C and V_{DD} = 1.14V.

TABLE 3-267: DEVRST_N TO FUNCTIONAL TIMES WHEN MSS/HPMS IS USED

Symbol	From	To	Description	Maximum Power-Up to Functional Time (uS)						
				005	010	025	050	060	090	150
$T_{POR2OUT}$	POWER_ON_RESET_N	Output available at I/O	Fabric to output	518	501	527	521	422	419	694
$T_{POR2MSSRST}$	POWER_ON_RESET_N	MSS_RESET_N_M2F	Fabric to MSS	515	497	524	518	417	414	689
$T_{MSSRST2OUT}$	MSS_RESET_N_M2F	Output available at I/O	MSS to output	3.5	3.5	3.5	3.3	4.8	4.8	4.8
$T_{DEVRST2OUT}$	DEVRST_N	Output available at I/O	V_{DD} at its minimum threshold level to output	706	768	715	691	641	635	871
$T_{DEVRST2POR}$	DEVRST_N	POWER_ON_RESET_N	V_{DD} at its minimum threshold level to fabric	233	289	216	213	237	234	219
$T_{DEVRST2MSSRST}$	DEVRST_N	MSS_RESET_N_M2F	V_{DD} at its minimum threshold level to MSS	702	765	712	688	636	630	866
$T_{DEVRST2WPU}$	DEVRST_N	DDRIO Inbuf weak pull	DEVRST_N to Inbuf weak pull	208	202	197	193	216	215	215
	DEVRST_N	MSIO Inbuf weak pull	DEVRST_N to Inbuf weak pull	208	202	197	193	216	215	215
	DEVRST_N	MSIOD Inbuf weak pull	DEVRST_N to Inbuf weak pull	208	202	197	193	216	215	215

© 2026 Microchip Technology Inc. and its subsidiaries

FIGURE 3-19: DEVRST_N TO FUNCTIONAL TIMING DIAGRAM FOR SMARTFUSION 2

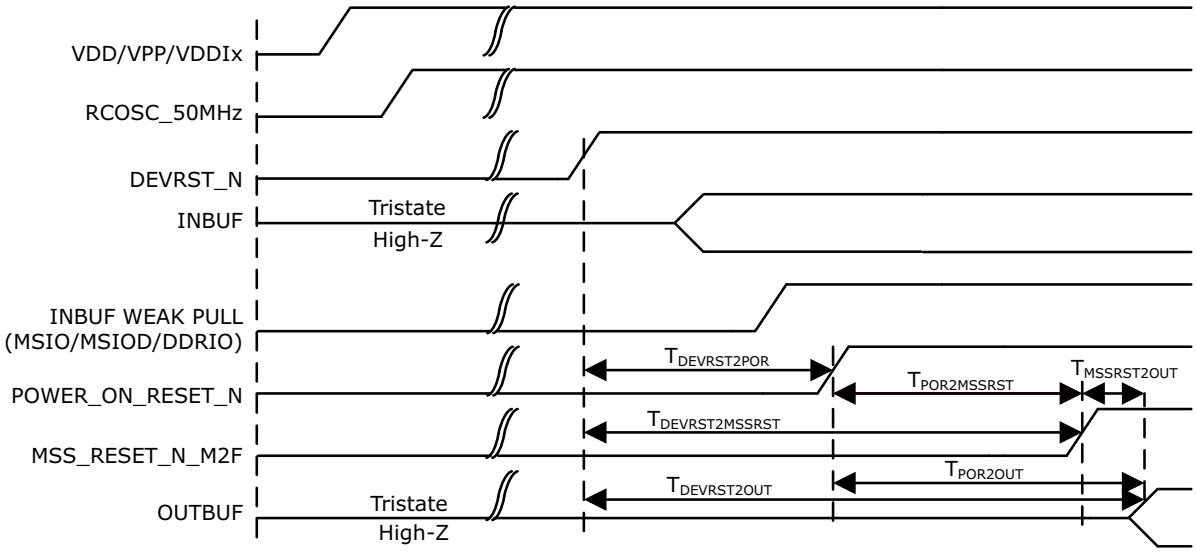

FIGURE 3-20: DEVRST_N TO FUNCTIONAL TIMING DIAGRAM FOR IGLOO 2

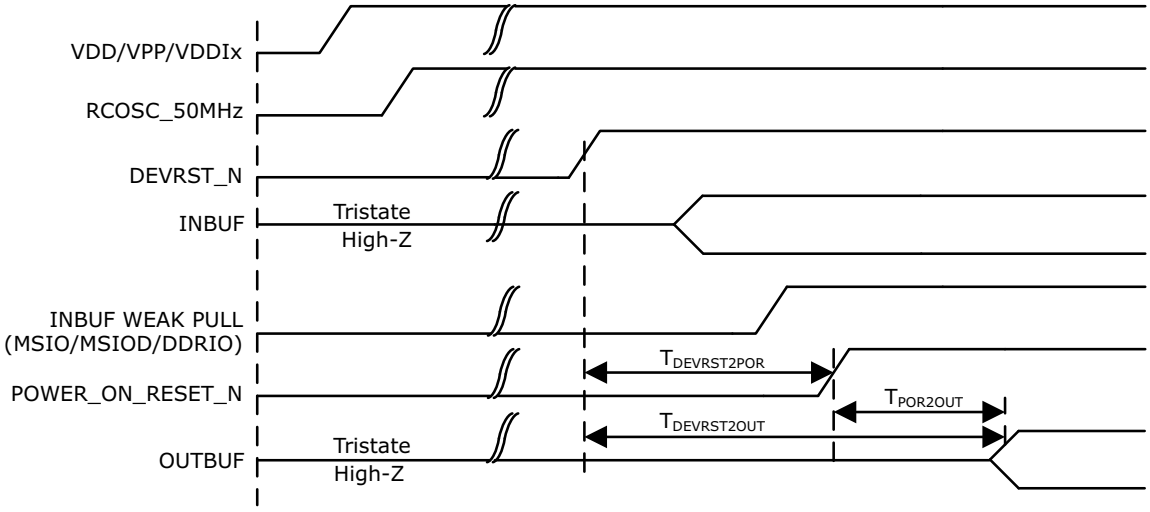

The following table lists the DEVRST_N to functional times in worst-case industrial conditions when T_J = 100 °C and V_{DD} = 1.14V.

TABLE 3-268: DEVRST_N TO FUNCTIONAL TIMES WHEN MSS/HPMS IS NOT USED

Symbol	From	To	Description	Maximum Power-up to Functional Time (uS)						
				005	010	025	050	060	090	150
$T_{POR2OUT}$	POWER_ON_RSET_N	Output available at I/O	Fabric to output	114	116	113	113	115	115	114

TABLE 3-268: DEVRST_N TO FUNCTIONAL TIMES WHEN MSS/HPMS IS NOT USED

$T_{DEVRST2OUT}$	DEVRST_N	Output available at I/O	V_{DD} at its minimum threshold level to output	314	353	314	307	343	341	341
$T_{DEVRST2POR}$	DEVRST_N	POWER_ON_RESET_N	V_{DD} at its minimum threshold level to fabric	200	238	201	195	230	229	227
$T_{DEVRST2WPU}$	DEVRST_N	DDRIO Inbuf weak pull	DEVRST_N to Inbuf weak pull	208	202	197	193	216	215	215
	DEVRST_N	MSIO Inbuf weak pull	DEVRST_N to Inbuf weak pull	208	202	197	193	216	215	215
	DEVRST_N	MSIOD Inbuf weak pull	DEVRST_N to Inbuf weak pull	208	202	197	193	216	215	215

3.27 Flash*Freeze Timing Characteristics

The following table lists the Flash*Freeze entry and exit times in worst-case industrial conditions when T_J = 100 °C and V_{DD} = 1.14V.

TABLE 3-269: FLASH*FREEZE ENTRY AND EXIT TIMES

Parameter	Symbol	Entry/Exit Timing FCLK = 100 MHz		Entry/Exit Timing FCLK = 3 MHz	Unit	Conditions
		005, 010, 025, 060, 090, and 150	050	All Devices		
Entry time	TFF_ENTRY	160	150	320	µs	eNVM and MSS/HPMS PLL = ON
		215	200	430	µs	eNVM and MSS/HPMS PLL= OFF
Exit time with respect to the MSS PLL Lock	TFF_EXIT	100	100	140	µs	eNVM and MSS/HPMS PLL = ON during F*F
		136	120	190	µs	eNVM = ON and MSS/HPMS PLL = OFF during F*F and MSS/HPMS PLL turned back on at exit
		200	200	285	µs	eNVM and MSS/HPMS PLL = OFF during F*F and both are turned back on at exit
		200	200	285	µs	eNVM = OFF and MSS/HPMS PLL = ON during F*F and eNVM turned back on at exit
Exit time with respect to the fabric PLL lock[1]	TFF_EXIT	1.5	1.5	1.5	ms	eNVM and MSS/HPMS PLL = ON during F*F
		1.5	1.5	1.5	ms	eNVM and MSS/HPMS PLL = OFF during F*F and both are turned back on at exit

© 2026 Microchip Technology Inc. and its subsidiaries

TABLE 3-269: FLASH*FREEZE ENTRY AND EXIT TIMES (CONTINUED)

Parameter	Symbol	Entry/Exit Timing FCLK = 100 MHz		Entry/Exit Timing FCLK = 3 MHz	Unit	Conditions
		005, 010, 025, 060, 090, and 150	050	All Devices		
Exit time with respect to the fabric buffer output	TFF_EXIT	21	15	21	µs	eNVM and MSS/HPMS PLL = ON during F*F
		65	55	65	µs	eNVM and MSS/HPMS PLL = OFF during F*F and both are turned back on at exit

1 PLL Lock Delay set to 1024 cycles (default).

3.28 DDR Memory Interface Characteristics

The following table lists the DDR memory interface characteristics in worst-case industrial conditions when T_J = 100 °C and V_{DD} = 1.14V.

TABLE 3-270: DDR MEMORY INTERFACE CHARACTERISTICS

Standard	Supported Data Rate		Unit
	Min.	Max.	
DDR3	667	667	Mbps
DDR2	667	667	Mbps
LPDDR	50	400	Mbps

3.29 SFP Transceiver Characteristics

IGLOO 2 and SmartFusion 2 SerDes complies with Small Form-factor Pluggable (SFP) requirements as specified in SFP INF-80741. The following table lists the electrical characteristics.

The following table lists the SFP transceiver electrical characteristics in worst-case industrial conditions when T_J = 100 °C and V_{DD} = 1.14V.

TABLE 3-271: SFP TRANSCEIVER ELECTRICAL CHARACTERISTICS

Pin	Direction	Differential Peak-Peak Voltage		Unit
		Min.	Max.	
RD±[1]	Output	1600	2400	mV
TD±[2]	Input	350	2400	mV

1 Based on default SerDes transmitter settings for PCIe Gen1. Lower amplitudes are available through programming changes to TX_AMP setting.

2 Based on Input Voltage Common-Mode (VICM) = 0 V. Requires AC Coupling.

3.30 SerDes Electrical and Timing AC and DC Characteristics

PCIe is a high-speed, packet-based, point-to-point, low-pin-count, serial interconnect bus. The IGLOO 2 and SmartFusion 2 SoC FPGAs has up to four hard high-speed serial interface blocks. Each SerDes block contains a PCIe system block. The PCIe system is connected to the SerDes block.

The following table lists the transmitter parameters in worst-case industrial conditions when T_J = 100 °C and V_{DD} = 1.14V.

TABLE 3-272: TRANSMITTER PARAMETERS

Symbol	Description	Min.	Max.	Unit
VTX-DIFF-PP	Differential swing (2.5 Gbps, 5.0 Gbps)	0.8	1.2	V
VTX-CM-AC-P	Output common mode voltage (2.5 Gbps)	—	20	mV
VTX-CM-AC-PP	Output common mode voltage (5.0 Gbps)	—	100	mV
VTX-RISE-FALL	Rise and fall time (20% to 80%, 2.5 Gbps)	0.125	—	UI
	Rise and fall time (20% to 80%, 5.0 Gbps)	0.15	—	UI
ZTX-DIFF-DC	Output impedance–differential	80	120	Ω
LTX-SKEW	Lane-to-lane TX skew within a SerDes block (2.5 Gbps)	—	500 ps + 2 UI	ps
	Lane-to-lane TX skew within a SerDes block (5.0 Gbps)	—	500 ps + 4 UI	ps
RLTX-DIFF	Return loss differential mode (2.5 Gbps)	–10	—	dB
	Return loss differential mode (5.0 Gbps) 0.05 GHz to 1.25 GHz	–10	—	dB
	1.25 GHz to 2.5 GHz	–8	—	dB
RLTX-CM	Return loss common mode (2.5 Gbps, 5.0 Gbps)	–6	—	dB
TX-LOCK-RST	Transmit PLL lock time from reset	—	10	µs
VTX-AMP	100 mV setting	90	150	mV
	400 mV setting	320	480	mV
	800 mV setting	660	940	mV
	1200 mV setting	950	1400	mV

The following table lists the receiver pa in worst-case industrial conditions when T_J = 100 °C and V_{DD} = 1.14V.

TABLE 3-273: RECEIVER PARAMETERS

Symbol	Description	Min.	Typ.	Max.	Unit
VRX-IN-PP-CC	Differential input peak-to-peak sensitivity (2.5 Gbps)	0.238	—	1.2	V
	Differential input peak-to-peak sensitivity (2.5 Gbps, de-emphasized)	0.219	—	1.2	V
	Differential input peak-to-peak sensitivity (5.0 Gbps)	0.300	—	1.2	V
	Differential input peak-to-peak sensitivity (5.0 Gbps, de-emphasized)	0.300	—	1.2	V
VRX-CM-AC-P	Input common mode range (AC coupled)	—	—	150	mV
ZRX-DIFF-DC	Differential input termination	80	100	120	Ω
REXT	External calibration resistor	1,188	1,200	1,212	Ω
CDR-LOCK-RST	CDR relock time from reset	—	—	15	µs
RLRX-DIFF	Return loss differential mode (2.5 Gbps)	–10	—	—	dB
	Return loss differential mode (5.0 Gbps) 0.05 GHz to 1.25 GHz	–10	—	—	dB
	1.25 GHz to 2.5 GHz	–8	—	—	dB
RLRX-CM	Return loss common mode (2.5 Gbps, 5.0 Gbps)	–6	—	—	dB

© 2026 Microchip Technology Inc. and its subsidiaries

TABLE 3-273: RECEIVER PARAMETERS (CONTINUED)

Symbol	Description	Min.	Typ.	Max.	Unit
RX-CID[1]	CID limit (set by 8B/10B coding, not the receiver PLL)	—	—	200	UI
VRX-IDLE-DET-DIFF-PP	Signal detect limit	65	—	175	mV

1 AC-coupled, BER = e^{-12}.

TABLE 3-274: SERDES PROTOCOL COMPLIANCE

Protocol	Maximum Data Rate (Gbps)	–1	–Std
PCIe Gen 1	2.5	Yes	Yes
PCIe Gen 2	5.0	Yes	—
XAUI	3.125	Yes	—
Generic EPCS	3.2	Yes	—
Generic EPCS	2.5	Yes	Yes

The following table lists the SerDes reference clock AC specifications in worst-case industrial conditions when T_J = 100 °C and V_{DD} = 1.14V.

TABLE 3-275: SERDES REFERENCE CLOCK AC SPECIFICATIONS

Parameter	Symbol	Min.	Max.	Unit
Reference clock frequency	F_{REFCLK}	100	160	MHz
Reference clock rise time	T_{RISE}	0.6	4	V/ns
Reference clock fall time	T_{FALL}	0.6	4	V/ns
Reference clock duty cycle	T_{CYC}	40	60	%
Reference clock mismatch	$M_{MREFCLK}$	–300	300	ppm
Reference spread spectrum clock	SSCref	0	5000	ppm

TABLE 3-276: HCSL MINIMUM AND MAXIMUM DC INPUT LEVELS (APPLICABLE TO SERDES REFCLK ONLY)

Parameter	Symbol	Min.	Typ.	Max.	Unit
Recommended DC Operating Conditions					
Supply voltage	V_{DDI}	2.375	2.5	2.625	V
HCSL DC Input Voltage Specification					
DC Input voltage	V_I	0	—	2.625	V
HCSL Differential Voltage Specification					
Input common mode voltage	V_{ICM}	0.05	—	2.4	V
Input differential voltage	V_{IDIFF}	100	—	1100	mV

TABLE 3-277: HCSL MINIMUM AND MAXIMUM AC SWITCHING SPEEDS (APPLICABLE TO SERDES REFCLK ONLY)

Parameter	Symbol	Min.	Typ.	Max.	Unit
HCSL AC Specifications					
Maximum data rate (for MSIO I/O bank)	F_{MAX}	—	—	350	Mbps
HCSL Impedance Specifications					
Termination resistance	Rt	—	100	—	Ω

3.31 SmartFusion 2 Specifications

3.31.1 MSS CLOCK FREQUENCY

The following table lists the maximum frequency for MSS main clock in worst-case industrial conditions when T_J = 100 °C and V_{DD} = 1.14V.

TABLE 3-278: MAXIMUM FREQUENCY FOR MSS MAIN CLOCK

Symbol	Description	–1	–Std	Unit
M3_CLK	Maximum frequency for the MSS main clock	166	142	MHz

3.31.2 SMARTFUSION 2 INTER-INTEGRATED CIRCUIT (I^2C) CHARACTERISTICS

This section describes the DC and switching of the I^2C interface. Unless otherwise noted, all output characteristics given are for a 100 pF load on the pins. For timing parameter definitions, see Figure 3-21.

The following table lists the I^2C characteristics in worst-case industrial conditions when T_J = 100 °C and V_{DD} = 1.14V.

TABLE 3-279: I^2C CHARACTERISTICS

Parameter	Symbol	Min.	Typ.	Max.	Unit	Conditions
Input low voltage	V_{IL}	–0.3	—	0.8	V	See Section 3.5.6, "Single-Ended I/O Standards" for more information. I/O standard used for illustration: MSIO bank–LVTTL 8 mA low drive.
Input high voltage	V_{IH}	2	—	3.45	V	See Section 3.5.6, "Single-Ended I/O Standards" for more information. I/O standard used for illustration: MSIO bank–LVTTL 8 mA low drive.
Hysteresis of schmitt triggered inputs for V_{DDI} > 2V	V_{HYS}	0.05 × V_{DDI}	—		V	See Table 3-26 for more information.
Input current high	I_{IL}	—	—	10	µA	See Section 3.5.6, "Single-Ended I/O Standards" for more information.
Input current low	I_{IH}	—	—	10	µA	See Section 3.5.6, "Single-Ended I/O Standards" for more information.
Input rise time	T_{ir}	—	—	1000	ns	Standard mode
		—	—	300	ns	Fast mode
Input fall time	T_{if}	—	—	300	ns	Standard mode
		—	—	300	ns	Fast mode
Maximum output voltage low (open drain) at 3 mA sink current for V_{DDI} > 2V	V_{OL}	—	—	0.4	V	See Section 3.5.6, "Single-Ended I/O Standards" for more information. I/O standard used for illustration: MSIO bank–LVTTL 8 mA low drive.
Pin capacitance	Cin	—	—	10	pF	V_{IN} = 0, f = 1.0 MHz
Output fall time from VIHMin to VILMax[1]	t_{OF}[1]	—	21.04	—	ns	V_{IHmin} to V_{ILMax}, CLOAD = 400 pF
		—	5.556	—	ns	V_{IHmin} to V_{ILMax}, CLOAD = 100 pF
Output rise time from VILMax to VIHMin[1]	t_{OR}[1]	—	19.887	—	ns	V_{ILMax} to V_{IHmin}, CLOAD = 400 pF
		—	5.218	—	ns	V_{ILMax} to V_{IHmin}, CLOAD = 100 pF
Output buffer maximum pull-down resistance[2, 3]	$R_{pull\text{-}up}$[2, 3]	—	—	50	Ω	—
Output buffer maximum pull-up resistance[2, 4]	$R_{pull\text{-}down}$[2, 4]		—	131.25	Ω	—
Maximum data rate	D_{MAX}	—	—	400	Kbps	Fast mode
		—	—	100	Kbps	Standard mode

© 2026 Microchip Technology Inc. and its subsidiaries

TABLE 3-279: I²C CHARACTERISTICS (CONTINUED)

Parameter	Symbol	Min.	Typ.	Max.	Unit	Conditions
Pulse width of spikes which must be suppressed by the input filter	T_{FILT}	—	50	—	ns	Fast mode

1 These values are provided for MSIO Bank–LVTTL 8 mA Low Drive at 25 °C, typical conditions. For board design considerations and detailed output buffer resistances, use the corresponding IBIS models located on the SoC Products Group website:

For IGLOO 2: https://www.microchip.com/en-us/products/fpgas-and-plds/fpgas/igloo-2-fpgas#Documentation.

For SmartFusion 2: https://www.microchip.com/en-us/products/fpgas-and-plds/system-on-chip-fpgas/smartfusion-2-fpgas#Documentation.

2 These maximum values are provided for information only. Minimum output buffer resistance values depend on V_{DDIx}, drive strength selection, temperature, and process. For board design considerations and detailed output buffer resistances, use the corresponding IBIS models located on the SoC Products Group website:

For IGLOO 2: https://www.microchip.com/en-us/products/fpgas-and-plds/fpgas/igloo-2-fpgas#Documentation.

For SmartFusion 2: https://www.microchip.com/en-us/products/fpgas-and-plds/system-on-chip-fpgas/smartfusion-2-fpgas#Documentation.

3 R(PULL-DOWN-MAX) = (VOLspec)/IOLspec.

4 R(PULL-UP-MAX) = (VDDImax–VOHspec)/IOHspec.

The following table lists the I²C switching characteristics in worst-case industrial conditions when T_J = 100 °C and V_{DD} = 1.14V.

TABLE 3-280: I²C SWITCHING CHARACTERISTICS

Parameter	Symbol	–1	Std	Unit
		Min.	Min.	
Low period of I2C_x_SCL	T_{LOW}	1	1	PCLK cycles
High period of I2C_x_SCL	T_{HIGH}	1	1	PCLK cycles
START hold time	$T_{HD;STA}$	1	1	PCLK cycles
START setup time	$T_{SU;STA}$	1	1	PCLK cycles
DATA hold time	$T_{HD;DAT}$	1	1	PCLK cycles
DATA setup time	$T_{SU;DAT}$	1	1	PCLK cycles
STOP setup time	$T_{SU;STO}$	1	1	PCLK cycles

FIGURE 3-21: I²C TIMING PARAMETER DEFINITION

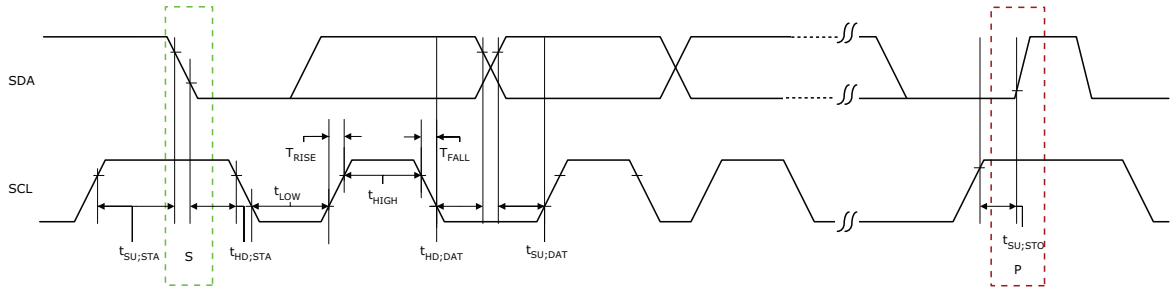

3.31.3 SERIAL PERIPHERAL INTERFACE (SPI) CHARACTERISTICS

This section describes the DC and switching of the SPI interface. Unless otherwise noted, all output characteristics given are for a 35 pF load on the pins and all sequential timing characteristics are related to SPI_x_CLK. For timing parameter definitions, see Figure 3-22.

The following table lists the SPI characteristics in worst-case industrial conditions when T_J = 100 °C and V_{DD} = 1.14V

TABLE 3-281: SPI CHARACTERISTICS FOR ALL DEVICES

Symbol	Description	Min.	Typ.	Max.	Unit	Conditions
SPIFMAX	Maximum operating frequency of SPI interface	—	—	20	MHz	—
sp1	SPI_[0|1]_CLK minimum period					
	SPI_[0|1]_CLK = PCLK/2	12	—	—	ns	—
	SPI_[0|1]_CLK = PCLK/4	24.1	—	—	ns	—
	SPI_[0|1]_CLK = PCLK/8	48.2	—	—	ns	—
	SPI_[0|1]_CLK = PCLK/16	0.1	—	—	µs	—
	SPI_[0|1]_CLK = PCLK/32	0.19	—	—	µs	—
	SPI_[0|1]_CLK = PCLK/64	0.39	—	—	µs	—
	SPI_[0|1]_CLK = PCLK/128	0.77	—	—	µs	—
sp2	SPI_[0|1]_CLK minimum pulse width high					
	SPI_[0|1]_CLK = PCLK/2	6	—	—	ns	—
	SPI_[0|1]_CLK = PCLK/4	12.05	—	—	ns	—
	SPI_[0|1]_CLK = PCLK/8	24.1	—	—	ns	—
	SPI_[0|1]_CLK = PCLK/16	0.05	—	—	µs	—
	SPI_[0|1]_CLK = PCLK/32	0.095	—	—	µs	—
	SPI_[0|1]_CLK = PCLK/64	0.195	—	—	µs	—
	SPI_[0|1]_CLK = PCLK/128	0.385	—	—	µs	—
sp3	SPI_[0|1]_CLK minimum pulse width low					
	SPI_[0|1]_CLK = PCLK/2	6	—	—	ns	—
	SPI_[0|1]_CLK = PCLK/4	12.05	—	—	ns	—
	SPI_[0|1]_CLK = PCLK/8	24.1	—	—	ns	—
	SPI_[0|1]_CLK = PCLK/16	0.05	—	—	µs	—
	SPI_[0|1]_CLK = PCLK/32	0.095	—	—	µs	—
	SPI_[0|1]_CLK = PCLK/64	0.195	—	—	µs	—
	SPI_[0|1]_CLK = PCLK/128	0.385	—	—	µs	—
sp4	SPI_[0|1]_CLK, SPI_[0|1]_DO, SPI_[0|1]_SS rise time (10%–90%)[1]	—	2.77	—	ns	I/O Configuration: LVCMOS 2.5V–8 mA. AC loading: 35 pF Test conditions: Typical voltage, 25 °C.
sp5	SPI_[0|1]_CLK, SPI_[0|1]_DO, SPI_[0|1]_SS fall time (10%–90%)[1]	—	2.906	—	ns	IO Configuration: LVCMOS 2.5 V–8 mA. AC Loading: 35 pF Test Conditions: Typical Voltage, 25 °C.
SPI master configuration (applicable for 005, 010, 025, and 050 devices)						
sp6m	SPI_[0|1]_DO setup time[2]	(SPI_x_CLK_period/2) – 8.0	—	—	ns	—
sp7m	SPI_[0|1]_DO hold time[2]	(SPI_x_CLK_period/2) – 2.5	—	—	ns	—
sp8m	SPI_[0|1]_DI setup time[2]	12	—	—	ns	—
sp9m	SPI_[0|1]_DI hold time[2]	2.5	—	—	ns	—

© 2026 Microchip Technology Inc. and its subsidiaries

TABLE 3-281: SPI CHARACTERISTICS FOR ALL DEVICES (CONTINUED)

Symbol	Description	Min.	Typ.	Max.	Unit	Conditions
SPI slave configuration (applicable for 005, 010, 025, and 050 devices)						
sp6s	SPI_[0|1]_DO setup time[2]	(SPI_x_CLK_period/2) – 17.0	—	—	ns	—
sp7s	SPI_[0|1]_DO hold time[2]	(SPI_x_CLK_period/2) + 3.0	—	—	ns	—
sp8s	SPI_[0|1]_DI setup time[2]	2	—	—	ns	—
sp9s	SPI_[0|1]_DI hold time[2]	7	—	—	ns	—
SPI master configuration (applicable for 060, 090, and 150 devices)						
sp6m	SPI_[0|1]_DO setup time[2]	(SPI_x_CLK_period/2) – 7.0	—	—	ns	—
sp7m	SPI_[0|1]_DO hold time[2]	(SPI_x_CLK_period/2) – 9.5	—	—	ns	—
sp8m	SPI_[0|1]_DI setup time[2]	15	—	—	ns	—
sp9m	SPI_[0|1]_DI hold time[2]	–2.5	—	—	ns	—
SPI slave configuration (applicable for 060, 090, and 150 devices)						
sp6s	SPI_[0|1]_DO setup time[2]	(SPI_x_CLK_period/2) – 16.0	—		ns	—
sp7s	SPI_[0|1]_DO hold time[2]	(SPI_x_CLK_period/2) - 3.5	—		ns	—
sp8s	SPI_[0|1]_DI setup time[2]	3	—		ns	—
sp9s	SPI_[0|1]_DI hold time[2]	2.5	—		ns	—

1 For specific Rise/Fall Times board design considerations and detailed output buffer resistances, use the corresponding IBIS models located on the Microchip FPGA Products Group website:

For IGLOO 2: https://www.microchip.com/en-us/products/fpgas-and-plds/fpgas/igloo-2-fpgas#Documentation.

For SmartFusion 2: https://www.microchip.com/en-us/products/fpgas-and-plds/system-on-chip-fpgas/smartfusion-2-fpgas#Documentation.

2 For allowable pclk configurations, see Serial Peripheral Interface Controller section in the *UG0331: SmartFusion2 Microcontroller Subsystem User Guide*.

FIGURE 3-22: SPI TIMING FOR A SINGLE FRAME TRANSFER IN MOTOROLA MODE (SPH = 1)

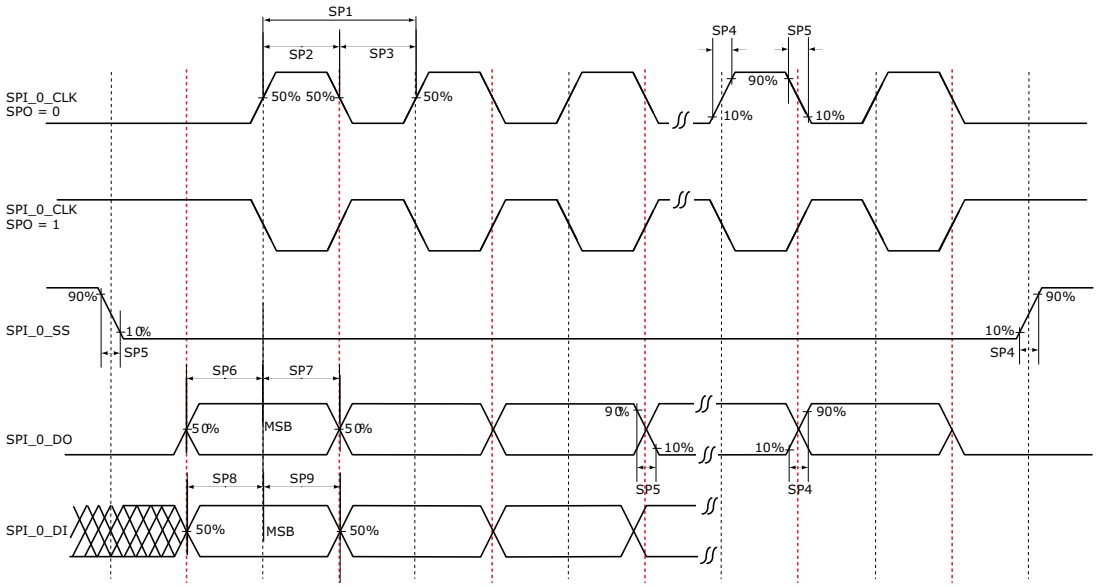

3.32 CAN Controller Characteristics

The following table lists the CAN controller characteristics in worst-case industrial conditions, when T_J = 100 °C and V_{DD} = 1.14V.

TABLE 3-282: CAN CONTROLLER CHARACTERISTICS

Parameter	Description	–1	–Std	Unit
FCANREFCLK[1]	Internally sourced CAN reference clock frequency	160	136	MHz
BAUDCANMAX	Maximum CAN performance baud rate	1	1	Mbps
BAUDCANMIN	Minimum CAN performance baud rate	0.05	0.05	Mbps

1 PCLK to CAN controller must be a multiple of 8 MHz.

3.33 USB Characteristics

The following table lists the USB characteristics in worst-case industrial conditions, when T_J = 100 °C and V_{DD} = 1.14V.

TABLE 3-283: USB CHARACTERISTICS

Parameter	Description	–1	–Std	Unit
FUSBREFCLK	Internally sourced USB reference clock frequency	166	142	MHz
TUSBCLK	USB clock period	16.66	16.66	ns
TUSBPD	Clock to USB data propagation delay	9.0	9.0	ns
TUSBSU	Setup time for USB data	6.0	6.0	ns
TUSBHD	Hold time for USB data	0	0	ns

3.34 MMUART Characteristics

The following table lists the MMUART characteristics in worst-case industrial conditions, when T_J = 100 °C and V_{DD} = 1.14V.

TABLE 3-284: MMUART CHARACTERISTICS

Parameter	Description	–1	–Std	Unit
FMMUART_REF_CLK	Internally sourced MMUART reference clock frequency.	166	142	MHz
BAUDMMUARTTx	Maximum transmit baud rate	10.375	8.875	Mbps
BAUDMMUARTRx	Maximum receive baud rate	10.375	8.875	Mbps

3.35 IGLOO 2 Specifications

3.35.1 HPMS CLOCK FREQUENCY

The following table lists the maximum frequency for HPMS main clock in worst-case industrial conditions, when T_J = 100 °C and V_{DD} = 1.14V.

TABLE 3-285: MAXIMUM FREQUENCY FOR HPMS MAIN CLOCK

Symbol	Description	–1	–Std	Unit
HPMS_CLK	Maximum frequency for the HPMS main clock	166	142	MHz

3.35.2 IGLOO 2 SERIAL PERIPHERAL INTERFACE (SPI) CHARACTERISTICS

This section describes the DC and switching of the SPI interface. Unless otherwise noted, all output characteristics given are for a 35 pF load on the pins and all sequential timing characteristics are related to SPI_0_CLK. For timing parameter definitions, see Figure 3-23.

© 2026 Microchip Technology Inc. and its subsidiaries

The following table lists the SPI characteristics in worst-case industrial conditions, when T_J = 100 °C and V_{DD} = 1.14V.

TABLE 3-286: SPI CHARACTERISTICS FOR ALL DEVICES

Symbol	Description	Min.	Typ.	Max.	Unit	Conditions
SPIFMAX	Maximum operating frequency of SPI interface	—	—	20	MHz	—
sp1	SPI_[0|1]_CLK minimum period					
	SPI_[0|1]_CLK = PCLK/2	12	—	—	ns	—
	SPI_[0|1]_CLK = PCLK/4	24.1	—	—	ns	—
	SPI_[0|1]_CLK = PCLK/8	48.2	—	—	ns	—
	SPI_[0|1]_CLK = PCLK/16	0.1	—	—	µs	—
	SPI_[0|1]_CLK = PCLK/32	0.19	—	—	µs	—
	SPI_[0|1]_CLK = PCLK/64	0.39	—	—	µs	—
	SPI_[0|1]_CLK = PCLK/128	0.77	—	—	µs	—
sp2	SPI_[0|1]_CLK minimum pulse width high					
	SPI_[0|1]_CLK = PCLK/2	6	—	—	ns	—
	SPI_[0|1]_CLK = PCLK/4	12.05	—	—	ns	—
	SPI_[0|1]_CLK = PCLK/8	24.1	—	—	ns	—
	SPI_[0|1]_CLK = PCLK/16	0.05	—	—	µs	—
	SPI_[0|1]_CLK = PCLK/32	0.095	—	—	µs	—
	SPI_[0|1]_CLK = PCLK/64	0.195	—	—	µs	—
	SPI_[0|1]_CLK = PCLK/128	0.385	—	—	µs	—
sp3	SPI_[0|1]_CLK minimum pulse width low					
	SPI_[0|1]_CLK = PCLK/2	6	—	—	ns	—
	SPI_[0|1]_CLK = PCLK/4	12.05	—	—	ns	—
	SPI_[0|1]_CLK = PCLK/8	24.1	—	—	ns	—
	SPI_[0|1]_CLK = PCLK/16	0.05	—	—	µs	—
	SPI_[0|1]_CLK = PCLK/32	0.095	—	—	µs	—
	SPI_[0|1]_CLK = PCLK/64	0.195	—	—	µs	—
	SPI_[0|1]_CLK = PCLK/128	0.385	—	—	µs	—
sp4	SPI_[0|1]_CLK, SPI_[0|1]_DO, SPI_[0|1]_SS rise time (10%–90%)[1]	—	2.77		ns	I/O Configuration: LVCMOS 2.5V - 8 mA. AC loading: 35 pF. test conditions: Typical voltage, 25 °C.
sp5	SPI_[0|1]_CLK, SPI_[0|1]_DO, SPI_[0|1]_SS fall time (10%–90%)[1]	—	2.906		ns	I/O Configuration: LVCMOS 2.5V - 8 mA. AC loading: 35 pF. test conditions: Typical voltage, 25 °C.
SPI master configuration (applicable for 005, 010, 025, and 050 devices)						
sp6m	SPI_[0|1]_DO setup time[2]	(SPI_x_CLK_period/2) – 8.0	—	—	ns	—
sp7m	SPI_[0|1]_DO hold time[2]	(SPI_x_CLK_period/2) – 2.5	—	—	ns	—

TABLE 3-286: SPI CHARACTERISTICS FOR ALL DEVICES (CONTINUED)

Symbol	Description	Min.	Typ.	Max.	Unit	Conditions
sp8m	SPI_[0|1]_DI setup time[2]	12	—	—	ns	—
sp9m	SPI_[0|1]_DI hold time[2]	2.5	—	—	ns	—
SPI slave configuration (applicable for 005, 010, 025, and 050 devices)						
sp6s	SPI_[0|1]_DO setup time[2]	(SPI_x_CLK_period/2) – 17.0	—	—	ns	—
sp7s	SPI_[0|1]_DO hold time[2]	(SPI_x_CLK_period/2) + 3.0	—	—	ns	—
sp8s	SPI_[0|1]_DI setup time[2]	2	—	—	ns	—
sp9s	SPI_[0|1]_DI hold time[2]	7	—	—	ns	—
SPI master configuration (applicable for 060, 090, and 150 devices)						
sp6m	SPI_[0|1]_DO setup time[2]	(SPI_x_CLK_period/2) – 7.0	—	—	ns	—
sp7m	SPI_[0|1]_DO hold time[2]	(SPI_x_CLK_period/2) – 9.5	—	—	ns	—
sp8m	SPI_[0|1]_DI setup time[2]	15	—	—	ns	—
sp9m	SPI_[0|1]_DI hold time[2]	–2.5	—	—	ns	—
SPI slave configuration (applicable for 060, 090, and 150 devices)						
sp6s	SPI_[0|1]_DO setup time[2]	(SPI_x_CLK_period/2) – 16.0	—	—	ns	—
sp7s	SPI_[0|1]_DO hold time[2]	(SPI_x_CLK_period/2) – 3.5	—	—	ns	—
sp8s	SPI_[0|1]_DI setup time[2]	3	—	—	ns	—
sp9s	SPI_[0|1]_DI hold time[2]	2.5	—	—	ns	—

1 For specific Rise/Fall Times board design considerations and detailed output buffer resistances, use the corresponding IBIS models located on the Microchip SoC Products Group website:

For IGLOO 2: https://www.microchip.com/en-us/products/fpgas-and-plds/fpgas/igloo-2-fpgas#Documentation.

For SmartFusion 2: https://www.microchip.com/en-us/products/fpgas-and-plds/system-on-chip-fpgas/smartfusion-2-fpgas#Documentation.

2 For allowable pclk configurations, see the Serial Peripheral Interface Controller section in the *SmartFusion2 MicroController Subsystem User Guide*.

FIGURE 3-23: SPI TIMING FOR A SINGLE FRAME TRANSFER IN MOTOROLA MODE (SPH = 1)

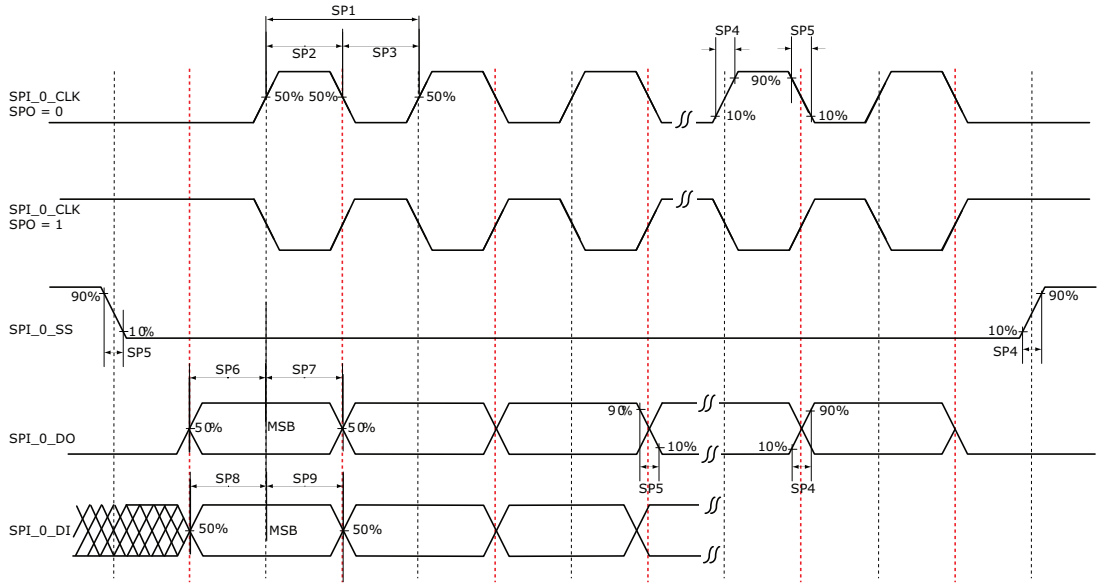

© 2026 Microchip Technology Inc. and its subsidiaries

APPENDIX A: REVISION HISTORY

The revision history describes the changes that were implemented in the document. The changes are listed by revision, starting with the current publication.

A.1 Revision F—05/2026

In the revision F of this document, the Table 3-3 was updated by inserting a note to point out that SmartFusion 2 and IGLOO 2 FPGA Retention Calculator can be obtained through Secure Document Extranet (SDE).

A.2 Revision E—12/2024

In the revision E of this document, the Table 3-2 was updated inserting a note to assert that the product is designed and validated for operation within the junction temperature (TJ) range.

A.3 Revision D—12/2023

In the revision D of this document, the "INTRODUCTION" section was updated by adding part numbers with prefixes for IGLOO 2 and SmartFusion 2.

A.4 Revision C—11/2023

The following is a summary of the changes in revision C of this document.

- Updated the minimum timing values of SP6-SP9 in Table 3-261.
- Added “DEVRST_N pulse width” details to DEVRST_N Characteristics in Table 3-265.
- Removed bank numbers for FDDR and MDDR Reference voltage supply in Table 3-2.

A.5 Revision B

The following is a summary of the changes in revision B of this document.

- Updated Table 3-7 by adding FCS158 related information.
- Updated the information against Access time with feed-through write timing in Table 3-229 to Table 3-233. For more information about this change, see https://ww1.microchip.com/downloads/aemDocuments/documents/FPGA/can/CN_SF2_IGLOO2_FPGA_LSRAM_Write-Feedthrough_Timing.pdf

A.6 Revision A

The following is a summary of the changes in revision A of this document.

- Updated the Data Sheet as per the latest Microchip publishing standards.
- Changed DS number from DS0128 to DS00004750A.
- Updated notes 2 and 3 of Table 3-3.
- Updated Flash*Freeze modes and configurations statuses in Table 3-8
- Corrected note 2 (FD-102) and added note 3 to Table 3-22.
- Updated Microchip links for information regarding IGLOO 2 and SmartFusion 2 products in Section 2.0, "References", Section 3.16, "SRAM PUF", Table 3-33, Table 3-42, Table 3-64,Table 3-77, Table 3-261, Table 3-279, Table 3-281, and Table 3-286.
- Added Microchip Tech Support web link in Section 3.1.3, "ESD Performance".
- Updated note of Table 3-242.
- Added note to Table 3-249.
- Added PLL_ARST_N value in Table 3-257.
- Modified 50 MHz and 1 MHz enable/disable details in Table 3-8.
- Merged and modified tables in Section 3.13, "Programming Times" (Table 3-242 addresses SAR 105131 and SAR 103074).
- Corrected Table 3-255.
- Added note 2 to Table 3-256.
- Added note to Table 3-260.

- Added Table 3-266.
- Provided value for delay on SC_SPI_SDO after SC_SPI_SS is de-asserted and added note 2 to Table 3-261 .
- Added reference to Figure 3-22 in Section 3.23, "System Controller SPI Characteristics".

A.7 Revision 12.0

The following is a summary of the changes in revision 12.0 of this document.

- A note about SERDES_[01]_VDD supply was added to recommended operating conditions table. See Table 3-2.
- A note about V_{ID} was added to LVDS DC differential voltage specification. See Table 3-161.
- Updated Table 3-261, Table 3-263, Table 3-264, Table 3-265, Table 3-267, and Table 3-268.
- Updated Table 3-273 with RX-CID details.

A.8 Revision 11.0

The following is a summary of the changes in revision 11.0 of this document.

- Updated Table 3-22 with minimum and maximum values for input current low and high (SAR 73114 and 80314).
- Added Section , "The following table lists the SRAM PUF in worst-case industrial conditions when TJ = 100 °C and VDD = 1.14V." (SAR 73114 and 79517).
- Added 060 device in Table 3-257 (SAR 79860).
- Added Section , "" (SAR 73114).
- Added Section 3.18, "Cryptographic Block Characteristics" (SAR 73114 and 79516).
- Updated Table 3-272 with VTX-AMP details (SAR 81756).
- Updated note in Table 3-273 SAR 74570 and 80677).
- Updated Table 3-274 with generic EPCS details (SAR 75307).
- Added Table 3-284 (SAR 50424).

A.9 Revision 10.0

The following is a summary of the changes in revision 10.0 of this document.

- The Surge Current on VDD during DEVRST_B Assertion and Surge Current on VDD during Digest Check using System Services tables were deleted and added reference to *AC393: Board Design Guidelines for SmartFusion2 SoC and IGLOO2 FPGAs Application Note*. (SAR 76865 and 76623).
- Added 060 device in Table 3-2 (SAR 76383).
- Updated Table 3-22 for ramp time input (SAR 72103).
- Added 060 device details in Table 3-259 (SAR 74927).
- Updated Table 3-265 for name change (SAR 74925).
- Updated Table 3-258 for 060 FG676 Package details (SAR 78849).
- Updated Table 3-281 for SmartFusion2 and Table 3-286 for IGLOO2 for SPI timing and Fmax (SAR 56645, 75331).
- Updated Table 3-269 for Flash*Freeze entry and exit times (SAR 75329, 75330).
- Updated Table 3-273 or RX-CID information (SAR 78271).
- Added Table 3-6 and Figure 3-1 (SAR 78932).
- Updated Table 3-221 or timing characteristics and Table 3-222 (SAR 75998).
- Added Section 3.16, "SRAM PUF" (SAR 64406).
- Added a footnote on digest cycle in Table 3-3 (SAR 79812).

A.10 Revision 9.0

The following is a summary of the changes in revision 9.0 of this document.

- Added a note in Table 3-3 (SAR 71506).
- Added a note in Table 3-4 (SAR 74616).
- Added a note in Figure 3-3 (SAR 71506).
- Updated Quiescent Supply Current for 060 in Table 3-9 and Table 3-10 (SAR 74483).

© 2026 Microchip Technology Inc. and its subsidiaries

- Updated programming currents for 060 in Table 3-11, Table 3-12, and Table 3-13.
- Added DEVRST_B assertion tables (SAR 74708).
- Updated I/O speeds for LVDS 3.3 V in Table 3-16 and Table 3-19 (SAR 69829).
- Updated Table 3-22 (SAR 69418).
- Updated Table 3-23, Table 3-24, and Table 3-25 (SAR 74570).
- Updated all AC/DC table to link to the Table 3-22 for reference (SAR 69418).
- Added Tables 3-244 and 3-245 (SAR 73971).
- Updated Section 3.30, "SerDes Electrical and Timing AC and DC Characteristics" (SAR 71171).
- Added Section 3.25, "DEVRST_N Characteristics" (SAR 64100, 72103).
- Added Table 3-274 (SAR 71897).
- Added 060 devices in Table 3-252, Table 3-253, and Table 3-254 (SAR 57898).
- Updated duty cycle parameter of crystal in Table 3-255 and Table 3-256 (SAR 57898).
- Added 32 KHz mode PLL acquisition time in Table 3-257 (SAR 68281).
- Updated Table 3-269 for 060 devices (SAR 57828).
- Updated Table 3-273 for CID value (SAR 70878).

A.11 Revision 8.0

The following is a summary of the changes in revision 8.0 of this document.

- Updated Table 3-9 (SAR 69218).
- Updated Table 3-10 (SAR 69218).
- Updated Table 3-258 (SAR 69000).

A.12 Revision 7.0

The following is a summary of the changes in revision 7.0 of this document.

- Updated Table 1-1 (SAR 68620).

A.13 Revision 6.0

The following is a summary of the changes in revision 6.0 of this document.

- Updated Table 3-3 (SAR 65949).
- Updated Table 3-7 (SAR 62995).
- Updated Table 3-121 and Table 3-131 (SAR 67210).
- Added Section 3.15, "Embedded NVM (eNVM) Characteristics" (SAR 52509).
- Updated Table 3-252 (SAR 64855).
- Updated Table 3-257 (SAR 65958 and SAR 56666).
- Added Section 3.28, "DDR Memory Interface Characteristics" (SAR 66223).
- Added Section 3.29, "SFP Transceiver Characteristics" (SAR 63105).
- Updated Table 3-278 and Table 3-285 (SAR 66314).

A.14 Revision 5.0

The following is a summary of the changes in revision 5.0 of this document.

- Updated Table 1-1.
- Updated Table 3-2 for T_J symbol information.
- Updated Table 3-3 (SAR 63109).
- Updated Table 3-7.
- Updated Table 3-257 SAR 62012).
- Added Table 3-267 (SAR 64100).
- Added Table 3-282 and Table 3-283 (SAR 50424).

A.15 Revision 4.0

The following is a summary of the changes in revision 4.0 of this document.

- Updated Table 1-1. Changed the Status of 090 devices to "Production" (SAR 62750).
- Updated Figure 3-10. Removed inverter bubble from DDR_IN latch (SAR 61418).
- Updated Section 3.30, "SerDes Electrical and Timing AC and DC Characteristics" (SAR 62836).

A.16 Revision 3.0

In revision 3.0 of this document, the Theta B/C columns and FCS325 package was updated. For more information, see Table 3-7 (SAR 62002).

A.17 Revision 2.0

The following is a summary of the changes in revision 2.0 of this document.

- Table 1-1 was updated (SAR 59056).
- Table 3-5 temperature and data retention information was updated SAR (61363).
- Storage Operating Table was updated and split into three tables—Table 3-3 and Table 3-5 (SAR 58725).
- Updated Theta B/C columns and FCS325 package in Table 3-7 (SAR 62002).
- Added 090-FCS325 thermal resistance to Table 3-7 (SAR 59384).
- TQ144 package was added to Table 3-7 (SAR 57708).
- Added PLL jitter data for the VF400 package (SAR 53162).
- Added Additional Worst Case IDD to Table 3-9 and Table 3-10 (SAR 59077).
- Table 3-11, Table 3-12, and Table 3-13 were added to verify Inrush currents (SAR 56348).
- Table 3-16 and Table 3-19—I/O speeds were replaced.
- Max speed was changed in Table 3-39 (SAR 57221) and in Table 3-50 (SAR 57113).
- Table 3-47–Table 3-55 were added.
- Added Cload to Table 3-87 (SAR 56238).
- Removed "Rs" information in DDR Timing Measurement Table 3-121, Table 3-131, and Table 3-142.
- Updated drive programming for M/B-LVDS outputs (SAR 58154).
- Added an inverter bubble to DDR_IN latch in Figure 3-10 (SAR 61418).
- QF waveform in Figure 3-11 was updated (SAR 59816).
- uSRAM Write Clock minimum values were updated in Table 3-235–Table 3-241 (SAR 55236).
- Fixed typo in the 32 kHz Crystal (XTAL) oscillator accuracy data section (SAR 59669).
- The Section 3.20, "On-Chip Oscillator" was split, and Section 3.15, "Embedded NVM (eNVM) Characteristics" was added.
- Table 3-252–Table 3-256 were revised.(SARs 57898 and 59669).
- PLL VCP Frequency and conditions were added to Table 3-257 (SAR 57416).
- Fixed typo for PLL jitter data in the 100 MHz-400 MHz range (SAR 60727).
- Updated FCCC information in Table 3-257 and Table 3-258 (SAR 60799).
- Device 025 specifications were added to Table 3-258 (SAR 51625).
- JTAG Table 3-259 was replaced (SAR 51188).
- Flash*Freeze Table 3-269 was replaced (SAR 57828).
- Added support for HCSL I/O Standard for SERDES reference clocks in Table 3-276 and Table 3-277 (SAR 50748).
- Tir and Tif parameters were added to Table 3-279 (SAR 52203).
- Speed grade consistency was fixed in tables throughout the datasheet (SAR 50722).
- Added jitter attenuation information (SAR 59405).

A.18 Revision 1.0

The following is a summary of the changes in revision 1.0 of this document.

- The IGLOO2 v2 and the SmartFusion2 v5 datasheets are combined into this single product family datasheet.

© 2026 Microchip Technology Inc. and its subsidiaries

Microchip Information

Trademarks

The “Microchip” name and logo, the “M” logo, and other names, logos, and brands are registered and unregistered trademarks of Microchip Technology Incorporated or its affiliates and/or subsidiaries in the United States and/or other countries (“Microchip Trademarks”). Information regarding Microchip Trademarks can be found at https://www.microchip.com/en-us/about/legalinformation/microchip-trademarks.

ISBN:979-8-3371-3222-8

Legal Notice

This publication and the information herein may be used only with Microchip products, including to design, test, and integrate Microchip products with your application. Use of this information in any other manner violates these terms. Information regarding device applications is provided only for your convenience and may be superseded by updates. It is your responsibility to ensure that your application meets with your specifications. Contact your local Microchip sales office for additional support or, obtain additional support at www.microchip.com/en-us/support/design-help/client-support-services.

THIS INFORMATION IS PROVIDED BY MICROCHIP "AS IS". MICROCHIP MAKES NO REPRESENTATIONS OR WARRANTIES OF ANY KIND WHETHER EXPRESS OR IMPLIED, WRITTEN OR ORAL, STATUTORY OR OTHERWISE, RELATED TO THE INFORMATION INCLUDING BUT NOT LIMITED TO ANY IMPLIED WARRANTIES OF NON-INFRINGEMENT, MERCHANTABILITY, AND FITNESS FOR A PARTICULAR PURPOSE, OR WARRANTIES RELATED TO ITS CONDITION, QUALITY, OR PERFORMANCE.

IN NO EVENT WILL MICROCHIP BE LIABLE FOR ANY INDIRECT, SPECIAL, PUNITIVE, INCIDENTAL, OR CONSEQUENTIAL LOSS, DAMAGE, COST, OR EXPENSE OF ANY KIND WHATSOEVER RELATED TO THE INFORMATION OR ITS USE, HOWEVER CAUSED, EVEN IF MICROCHIP HAS BEEN ADVISED OF THE POSSIBILITY OR THE DAMAGES ARE FORESEEABLE. TO THE FULLEST EXTENT ALLOWED BY LAW, MICROCHIP'S TOTAL LIABILITY ON ALL CLAIMS IN ANY WAY RELATED TO THE INFORMATION OR ITS USE WILL NOT EXCEED THE AMOUNT OF FEES, IF ANY, THAT YOU HAVE PAID DIRECTLY TO MICROCHIP FOR THE INFORMATION.

Use of Microchip devices in life support and/or safety applications is entirely at the buyer's risk, and the buyer agrees to defend, indemnify and hold harmless Microchip from any and all damages, claims, suits, or expenses resulting from such use. No licenses are conveyed, implicitly or otherwise, under any Microchip intellectual property rights unless otherwise stated.

Microchip Devices Code Protection Feature

Note the following details of the code protection feature on Microchip products:

- Microchip products meet the specifications contained in their particular Microchip Data Sheet.
- Microchip believes that its family of products is secure when used in the intended manner, within operating specifications, and under normal conditions.
- Microchip values and aggressively protects its intellectual property rights. Attempts to breach the code protection features of Microchip product is strictly prohibited and may violate the Digital Millennium Copyright Act.
- Neither Microchip nor any other semiconductor manufacturer can guarantee the security of its code. Code protection does not mean that we are guaranteeing the product is “unbreakable”. Code protection is constantly evolving. Microchip is committed to continuously improving the code protection features of our products.

Looking for pricing, stock, or lifecycle information?

Click below to explore more details on WIN SOURCE:

- View M2GL050-1FGG896I on WIN SOURCE
- Microchip Technology Information

Optimize Your Supply Chain with WIN SOURCE Solutions

- Global Sourcing Solution
- Obsolete Management
- Cost Control Management
- Shortage Management
- Alternative Solution
- Excess Inventory Management