THE DATASHEET OF

10AS048H2F34I1SG

www.win-source.net 0086-755-83957316

Explore more resources
Altera® Design Hub

Arria® 10 Device Datasheet

Online Version
Send Feedback

A10-DATASHEET

683771
2022.02.14

Contents

Intel® Arria® 10 Device Datasheet ... 3
Electrical Characteristics ... 3
Operating Conditions ... 3
Switching Characteristics ... 25
Transceiver Performance Specifications ... 25
Core Performance Specifications ... 36
Periphery Performance Specifications ... 46
HPS Specifications ... 54
Configuration Specifications ... 81
POR Specifications ... 81
JTAG Configuration Timing ... 82
FPP Configuration Timing ... 83
AS Configuration Timing ... 87
DCLK Frequency Specification in the AS Configuration Scheme ... 88
PS Configuration Timing ... 88
Initialization ... 90
Configuration Files ... 90
Minimum Configuration Time Estimation ... 92
Remote System Upgrades ... 94
User Watchdog Internal Circuitry Timing Specifications ... 94
I/O Timing ... 95
Programmable IOE Delay ... 95
Glossary ... 96
Document Revision History for the Intel Arria 10 Device Datasheet ... 100

Intel® Arria® 10 Device Datasheet

This datasheet describes the electrical characteristics, switching characteristics, configuration specifications, and I/O timing for Intel® Arria® 10 devices.

Intel Arria 10 devices are offered in extended and industrial grades. Extended devices are offered in –E1 (fastest), –E2, and –E3 speed grades. Industrial grade devices are offered in the –I1, –I2, and –I3 speed grades.

The suffix after the speed grade denotes the power options offered in Intel Arria 10 devices.

- L—enables the device to operate at low static power while maintaining excellent performance.
- S—standard power specification.
- V—enables the device to run at lower than default V_{CC}, reducing static and dynamic power while retaining equivalent performance.
- H—small device with high performance at the fastest speed grade (–1).

Related Information

Intel Arria 10 Device Overview
Provides more information about the densities and packages of devices in the Intel Arria 10 family.

Electrical Characteristics

The following sections describe the operating conditions and power consumption of Intel Arria 10 devices.

Operating Conditions

Intel Arria 10 devices are rated according to a set of defined parameters. To maintain the highest possible performance and reliability of the Intel Arria 10 devices, you must consider the operating requirements described in this section.

© Altera Corporation. Altera, the Altera logo, the 'a' logo, and other Altera marks are trademarks of Altera Corporation. Altera reserves the right to make changes to any products and services at any time without notice. Altera assumes no responsibility or liability arising out of the application or use of any information, product, or service described herein except as expressly agreed to in writing by Altera. Altera customers are advised to obtain the latest version of device specifications before relying on any published information and before placing orders for products or services.
*Other names and brands may be claimed as the property of others.

Absolute Maximum Ratings

This section defines the maximum operating conditions for Intel Arria 10 devices. The values are based on experiments conducted with the devices and theoretical modeling of breakdown and damage mechanisms. The functional operation of the device is not implied for these conditions.

Caution: Conditions outside the range listed in the following table may cause permanent damage to the device. Additionally, device operation at the absolute maximum ratings for extended periods of time may have adverse effects on the device.

Table 1. Absolute Maximum Ratings for Intel Arria 10 Devices

Symbol	Description	Condition	Minimum	Maximum	Unit
V_{CC}	Core voltage power supply	—	–0.50	1.21	V
V_{CCP}	Periphery circuitry and transceiver fabric interface power supply	—	–0.50	1.21	V
V_{CCERAM}	Embedded memory power supply	—	–0.50	1.36	V
V_{CCPT}	Power supply for programmable power technology and I/O pre-driver	—	–0.50	2.46	V
V_{CCBAT}	Battery back-up power supply for design security volatile key register	—	–0.50	2.46	V
V_{CCPGM}	Configuration pins power supply	(1)	–0.50	2.46	V
V_{CCIO}	I/O buffers power supply	3 V I/O	–0.50	4.10	V
		LVDS I/O	–0.50	2.46	V
V_{CCA_PLL}	Phase-locked loop (PLL) analog power supply	—	–0.50	2.46	V
V_{CCT_GXB}	Transmitter power supply	—	–0.50	1.34	V
V_{CCR_GXB}	Receiver power supply	—	–0.50	1.34	V
V_{CCH_GXB}	Transceiver output buffer power supply	—	–0.50	2.46	V
V_{CCL_HPS}	HPS core voltage and periphery circuitry power supply	—	–0.50	1.27	V
V_{CCIO_HPS}	HPS I/O buffers power supply	3 V I/O	–0.50	4.10	V
		LVDS I/O	–0.50	2.46	V

continued...

(1) The LVDS I/O values are applicable to all dedicated and dual-function configuration I/Os.

Symbol	Description	Condition	Minimum	Maximum	Unit
$V_{CCIOREF_HPS}$	HPS I/O pre-driver power supply	—	–0.50	2.46	V
V_{CCPLL_HPS}	HPS PLL power supply	—	–0.50	2.46	V
I_{OUT}	DC output current per pin	—	–25 (2)(3)(4)(5)(6)	25	mA
T_J	Operating junction temperature	—	–55	125	°C
T_{STG}	Storage temperature (no bias)	—	–65	150	°C

Related Information

- AN 692: Power Sequencing Considerations for Intel Cyclone 10 GX, Intel Arria 10, and Intel Stratix 10 Devices
  Provides the power sequencing requirements for Intel Arria 10 devices.
- Power-Up and Power-Down Sequences, Power Management in Intel Arria 10 Devices chapter
  Provides the power sequencing requirements for Intel Arria 10 devices.

Maximum Allowed Overshoot and Undershoot Voltage

During transitions, input signals may overshoot to the voltage listed in the following table and undershoot to –2.0 V for input currents less than 100 mA and periods shorter than 20 ns.

The maximum allowed overshoot duration is specified as a percentage of high time over the lifetime of the device. A DC signal is equivalent to 100% duty cycle.

---

(2) The maximum current allowed through any LVDS I/O bank pin when the device is not turned on or during power-up/power-down conditions is 10 mA.

(3) Total current per LVDS I/O bank must not exceed 100 mA.

(4) Voltage level must not exceed 1.89 V.

(5) Applies to all I/O standards and settings supported by LVDS I/O banks, including single-ended and differential I/Os.

(6) Applies only to LVDS I/O banks. 3 V I/O banks are not covered under this specification and must be implemented as per the power sequencing requirement. For more details, refer to *AN 692: Power Sequencing Considerations for Intel Cyclone® 10 GX, Intel Arria 10, and Intel Stratix® 10 Devices* and *Power Management in Intel Arria 10 Devices chapter*.

For example, a signal that overshoots to 2.70 V for LVDS I/O can only be at 2.70 V for ~4% over the lifetime of the device.

Table 2. Maximum Allowed Overshoot During Transitions for Intel Arria 10 Devices

This table lists the maximum allowed input overshoot voltage and the duration of the overshoot voltage as a percentage of device lifetime. The LVDS I/O values are applicable to the `VREFP_ADC` and `VREFN_ADC` I/O pins.

Symbol	Description	Condition (V)		Overshoot Duration as % at T_J = 100°C	Unit
		LVDS I/O [7]	3 V I/O		
Vi (AC)	AC input voltage	2.50	3.80	100	%
		2.55	3.85	42	%
		2.60	3.90	18	%
		2.65	3.95	9	%
		2.70	4.00	4	%
		> 2.70	> 4.00	No overshoot allowed	%

For an overshoot of 2.5 V, the percentage of high time for the overshoot can be as high as 100% over a 10-year period. Percentage of high time is calculated as ([delta T]/T) × 100. This 10-year period assumes that the device is always turned on with 100% I/O toggle rate and 50% duty cycle signal.

(7) The LVDS I/O values are applicable to all dedicated and dual-function configuration I/Os.

Figure 1. Intel Arria 10 Devices Overshoot Duration

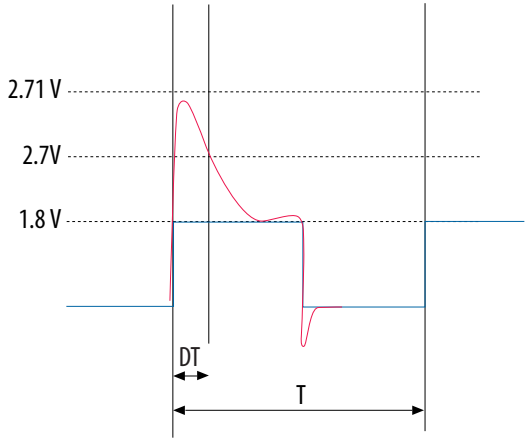

Recommended Operating Conditions

This section lists the functional operation limits for the AC and DC parameters for Intel Arria 10 devices.

Recommended Operating Conditions

Table 3. Recommended Operating Conditions for Intel Arria 10 Devices

This table lists the steady-state voltage values expected from Intel Arria 10 devices. Power supply ramps must all be strictly monotonic, without plateaus.

Symbol	Description	Condition	Minimum [8]	Typical	Maximum [8]	Unit
V_{CC}	Core voltage power supply	Standard and low power [9]	0.87	0.9	0.93	V
			0.92	0.95	0.98	V
		SmartVID [10]	0.82	—	0.93	V
V_{CCP}	Periphery circuitry and transceiver fabric interface power supply	Standard and low power [9]	0.87	0.9	0.93	V
			0.92	0.95	0.98	V
		SmartVID [10]	0.82	—	0.93	V
V_{CCPGM}	Configuration pins power supply	1.8 V	1.71	1.8	1.89	V
		1.5 V	1.425	1.5	1.575	V
		1.2 V	1.14	1.2	1.26	V
V_{CCERAM}	Embedded memory power supply	0.9 V [9]	0.87	0.9	0.93	V
		0.95 V [9]	0.92	0.95	0.98	V
V_{CCBAT} [11]	Battery back-up power supply (For design security volatile key register)	—	1.14	—	1.89	V

continued...

(8) This value describes the budget for the DC (static) power supply tolerance and does not include the dynamic tolerance requirements. Refer to the PDN tool for the additional budget for the dynamic tolerance requirements.

(9) You can operate –1 and –2 speed grade devices at 0.9 V or 0.95 V typical value. You can operate –3 speed grade device only at 0.9 V typical value. Operating at 0.95 V results in higher core performance and higher power consumption. Refer to core performance in this datasheet for different typical values. For more information about the power consumption of different typical values, refer to the Intel Quartus® Prime software, Power Analyzer report, and Early Power Estimator (EPE).

(10) SmartVID is supported in devices with –3V speed grades only.

(11) If you do not use the design security feature in Intel Arria 10 devices, connect V_{CCBAT} to a 1.5-V to 1.8-V power supply. Intel Arria 10 power-on reset (POR) circuitry monitors V_{CCBAT}. Intel Arria 10 devices do not exit POR if V_{CCBAT} is not powered up.

Symbol	Description	Condition	Minimum [8]	Typical	Maximum [8]	Unit
V_{CCPT}	Power supply for programmable power technology and I/O pre-driver	1.8 V	1.71	1.8	1.89	V
V_{CCIO}	I/O buffers power supply	3.0 V (for 3 V I/O only)	2.85	3.0	3.15	V
		2.5 V (for 3 V I/O only)	2.375	2.5	2.625	V
		1.8 V	1.71	1.8	1.89	V
		1.5 V	1.425	1.5	1.575	V
		1.35 V	[12]	1.35	[12]	V
		1.25 V	1.19	1.25	1.31	V
		1.2 V	[12]	1.2	[12]	V
V_{CCA_PLL}	PLL analog voltage regulator power supply	—	1.71	1.8	1.89	V
V_{REFP_ADC}	Precision voltage reference for voltage sensor	—	1.2475	1.25	1.2525	V
V_I [13][14]	DC input voltage	3 V I/O	–0.3	—	3.3	V
		LVDS I/O	–0.3	—	2.19	V
V_O	Output voltage	—	0	—	V_{CCIO}	V
T_J	Operating junction temperature	Extended	0	—	100	°C
		Industrial	–40	—	100	°C

continued...

(8) This value describes the budget for the DC (static) power supply tolerance and does not include the dynamic tolerance requirements. Refer to the PDN tool for the additional budget for the dynamic tolerance requirements.

(12) For minimum and maximum voltage values, refer to the I/O Standard Specifications section.

(13) The LVDS I/O values are applicable to all dedicated and dual-function configuration I/Os.

(14) This value applies to both input and tri-stated output configuration. Pin voltage should not be externally pulled higher than the maximum value.

Symbol	Description	Condition	Minimum (8)	Typical	Maximum (8)	Unit
		Military	(15)	—	(15)	°C
t_{RAMP} (16)	Power supply ramp time	Standard POR	200 µs	—	100 ms	—
		Fast POR	200 µs	—	4 ms	—

Related Information

- I/O Standard Specifications on page 19
- Intel Arria 10 Military Temperature Range Support Technical Brief
  Provides more details on the military requirement.

Transceiver Power Supply Operating Conditions

Table 4. Transceiver Power Supply Operating Conditions for Intel Arria 10 GX/SX Devices

Symbol	Description	Condition (17)	Minimum (18)	Typical	Maximum (18)	Unit
V_{CCT_GXB} [L1,R4] [C, D, E, F, G, H, I, J] (19)	Transmitter power supply	Chip-to-Chip ≤ 17.4 Gbps Or Backplane (20) ≤ 12.5 Gbps	1.0	1.03	1.06	V
		Chip-to-Chip ≤ 11.3 Gbps	0.92	0.95	0.98	V

continued...

(8) This value describes the budget for the DC (static) power supply tolerance and does not include the dynamic tolerance requirements. Refer to the PDN tool for the additional budget for the dynamic tolerance requirements.

(15) For more details on the military requirement, refer to the *Intel Arria 10 Military Temperature Range Support Technical Brief*.

(16) t_{ramp} is the ramp time of each individual power supply, not the ramp time of all combined power supplies.

(17) These data rate ranges vary depending on the transceiver speed grade. Refer to Transceiver Performance for Intel Arria 10 GX/SX Devices for exact data rate ranges.

(18) This value describes the budget for the DC (static) power supply tolerance and does not include the dynamic tolerance requirements. Refer to the PDN tool for the additional budget for the dynamic tolerance requirements.

(19) To support PCIe* Gen3, this pin must be 1.03 V (± 30 mV) or higher.

Symbol	Description	Condition [17]	Minimum [18]	Typical	Maximum [18]	Unit
$V_{CCR_GXB[L1,R4]}$ [C, D, E, F, G, H, I, J] [19]	Receiver power supply	Chip-to-Chip ≤ 17.4 Gbps Or Backplane [20] ≤ 12.5 Gbps	1.0	1.03	1.06	V
		Chip-to-Chip ≤ 11.3 Gbps	0.92	0.95	0.98	V
$V_{CCH_GXB[L,R]}$	Transceiver output buffer power supply	—	1.710	1.8	1.890	V

Note: Most VCCR_GXB and VCCT_GXB pins associated with unused transceiver channels can be grounded on a per-side basis to minimize power consumption. Refer to the *Intel Arria 10 GX, GT, and SX Device Family Pin Connection Guidelines* and the Intel Quartus Prime pin report for information about pinning out the package to minimize power consumption for your specific design.

Table 5. Transceiver Power Supply Operating Conditions for Intel Arria 10 GT Devices

Symbol	Description	Condition [21]	Minimum [18]	Typical	Maximum [18]	Unit
$V_{CCT_GXB[L,R]}$	Transmitter power supply	Chip-to-Chip ≤ 25.8 Gbps [22] Or Backplane [20] ≤ 12.5 Gbps	1.10	1.12	1.14	V
		Chip-to-Chip ≤ 15 Gbps	1.0	1.03	1.06	V

continued...

(17) These data rate ranges vary depending on the transceiver speed grade. Refer to Transceiver Performance for Intel Arria 10 GX/SX Devices for exact data rate ranges.

(18) This value describes the budget for the DC (static) power supply tolerance and does not include the dynamic tolerance requirements. Refer to the PDN tool for the additional budget for the dynamic tolerance requirements.

(20) Backplane applications assume advanced equalization circuitry, such as decision feedback equalization (DFE), is enabled to compensate for signal impairments. Chip-to-chip links are assumed to be applications with short reach channels that do not require DFE.

(21) These data rate ranges vary depending on the transceiver speed grade. Refer to Transceiver Performance for Intel Arria 10 GT Devices table for exact data rate ranges.

(22) 25.8 Gbps is the maximum data rate for GT channels. 17.4 Gbps is the maximum data rate for GX channels.

Symbol	Description	Condition [21]	Minimum [18]	Typical	Maximum [18]	Unit
		Or Backplane [20] ≤ 12.5 Gbps				
		Chip-to-Chip ≤ 11.3 Gbps	0.92	0.95	0.98	V
$V_{CCR_GXB[L,R]}$	Receiver power supply	Chip-to-Chip ≤ 25.8 Gbps Or Backplane [20] ≤ 12.5 Gbps	1.10	1.12	1.14	V
		Chip-to-Chip ≤ 15 Gbps Or Backplane [20] ≤ 12.5 Gbps	1.0	1.03	1.06	V
		Chip-to-Chip ≤ 11.3 Gbps	0.92	0.95	0.98	V
$V_{CCH_GXB[L,R]}$	Transceiver output buffer power supply	—	1.710	1.8	1.890	V

Related Information

- Transceiver Performance for Intel Arria 10 GT Devices on page 27
  Provides the data rate ranges for different transceiver speed grades.
- Transceiver Performance for Intel Arria 10 GX/SX Devices on page 25
  Provides the data rate ranges for different transceiver speed grades.
- Intel Arria 10 GX, GT, and SX Device Family Pin Connection Guidelines

(21) These data rate ranges vary depending on the transceiver speed grade. Refer to Transceiver Performance for Intel Arria 10 GT Devices table for exact data rate ranges.

HPS Power Supply Operating Conditions

Table 6. HPS Power Supply Operating Conditions for Intel Arria 10 SX Devices

This table lists the steady-state voltage and current values expected from Intel Arria 10 system-on-a-chip (SoC) devices with ARM*-based hard processor system (HPS). Power supply ramps must all be strictly monotonic, without plateaus. Refer to Recommended Operating Conditions for Intel Arria 10 Devices table for the steady-state voltage values expected from the FPGA portion of the Intel Arria 10 SoC devices.

Symbol	Description	Condition	Minimum [23]	Typical	Maximum [23]	Unit
V_{CCL_HPS}	HPS core voltage and periphery circuitry power supply	0.9 V [24]	0.87	0.9	0.93	V
		0.95 V [24]	0.92	0.95	0.98	V
V_{CCIO_HPS}	HPS I/O buffers power supply	3.0 V	2.85	3.0	3.15	V
		2.5 V	2.375	2.5	2.625	V
		1.8 V	1.71	1.8	1.89	V
$V_{CCIOREF_HPS}$	HPS I/O pre-driver power supply	—	1.71	1.8	1.89	V
V_{CCPLL_HPS}	HPS PLL analog voltage regulator power supply	—	1.71	1.8	1.89	V

Related Information

- Recommended Operating Conditions on page 8
  Provides the steady-state voltage values for the FPGA portion of the device.
- HPS Clock Performance on page 56
  Provides the maximum HPS clock frequencies.

DC Characteristics

Supply Current and Power Consumption

Intel offers two ways to estimate power for your design—the Excel-based Early Power Estimator (EPE) and the Intel Quartus Prime Power Analyzer feature.

---

(23) This value describes the budget for the DC (static) power supply tolerance and does not include the dynamic tolerance requirements. Refer to the PDN tool for the additional budget for the dynamic tolerance requirements.

(24) V_{CCL_HPS} options are valid under the operating conditions specified in the Maximum HPS Clock Frequencies table.

Use the Excel-based EPE before you start your design to estimate the supply current for your design. The EPE provides a magnitude estimate of the device power because these currents vary greatly with the usage of the resources.

The Intel Quartus Prime Power Analyzer provides better quality estimates based on the specifics of the design after you complete place-and-route. The Power Analyzer can apply a combination of user-entered, simulation-derived, and estimated signal activities that, when combined with detailed circuit models, yield very accurate power estimates.

Related Information

- Early Power Estimator for Intel Arria 10 User Guide
  Provides more information about power estimation tools.
- Power Analysis and Optimization User Guide: Intel Quartus Prime Pro Edition
  Provides more information about power estimation tools.

I/O Pin Leakage Current

Table 7. I/O Pin Leakage Current for Intel Arria 10 Devices

Symbol	Description	Condition	Min	Max	Unit
I_I	Input pin	V_I = 0 V to $V_{CCIOMAX}$	–80	80	µA
I_{OZ}	Tri-stated I/O pin	V_O = 0 V to $V_{CCIOMAX}$	–80	80	µA

Bus Hold Specifications

The bus-hold trip points are based on calculated input voltages from the JEDEC* standard.

Table 8. Bus Hold Parameters for Intel Arria 10 Devices

Parameter	Symbol	Condition	V_{CCIO} (V)										Unit
			1.2		1.5		1.8		2.5		3.0		
			Min	Max	Min	Max	Min	Max	Min	Max	Min	Max	
Bus-hold, low, sustaining current	I_{SUSL}	$V_{IN} > V_{IL}$ (max)	8 [25], 26 [26]	—	12 [25], 32 [26]	—	30 [25], 55 [26]	—	60	—	70	—	µA
Bus-hold, high, sustaining current	I_{SUSH}	$V_{IN} < V_{IH}$ (min)	–8 [25], –26 [26]	—	–12 [25], –32 [26]	—	–30 [25], –55 [26]	—	–60	—	–70	—	µA
Bus-hold, low, overdrive current	I_{ODL}	$0\ V < V_{IN} < V_{CCIO}$	—	125	—	175	—	200	—	300	—	500	µA
Bus-hold, high, overdrive current	I_{ODH}	$0\ V < V_{IN} < V_{CCIO}$	—	–125	—	–175	—	–200	—	–300	—	–500	µA
Bus-hold trip point	V_{TRIP}	—	0.3	0.9	0.38	1.13	0.68	1.07	0.70	1.7	0.8	2	V

OCT Calibration Accuracy Specifications

If you enable on-chip termination (OCT) calibration, calibration is automatically performed at power up for I/Os connected to the calibration block.

(25) This value is only applicable for LVDS I/O bank.

(26) This value is only applicable for 3 V I/O bank.

Table 9. OCT Calibration Accuracy Specifications for Intel Arria 10 Devices

Calibration accuracy for the calibrated on-chip series termination (R_S OCT) and on-chip parallel termination (R_T OCT) are applicable at the moment of calibration. When process, voltage, and temperature (PVT) conditions change after calibration, the tolerance may change.

Symbol	Description	Condition (V)	Resistance Tolerance			Unit
			–E1, –I1	–E2, –I2	–E3, –I3	
25-Ω and 50-Ω R_S	Internal series termination with calibration (25-Ω and 50-Ω setting)	V_{CCIO} = 1.8, 1.5, 1.2	± 15	± 15	± 15	%
34-Ω and 40-Ω R_S	Internal series termination with calibration (34-Ω and 40-Ω setting)	V_{CCIO} = 1.5, 1.25, 1.2	± 15	± 15	± 15	%
		V_{CCIO} = 1.35	± 20	± 20	± 20	%
48-Ω, 60-Ω, 80-Ω, and 120-Ω R_S	Internal series termination with calibration (48-Ω, 60-Ω, 80-Ω, and 120-Ω setting)	V_{CCIO} = 1.2	± 15	± 15	± 15	%
240-Ω R_S	Internal series termination with calibration (240-Ω setting)	V_{CCIO} = 1.2	± 20	± 20	± 20	%
30-Ω R_T	Internal parallel termination with calibration (30-Ω setting)	V_{CCIO} = 1.5, 1.35, 1.25	–10 to +40	–10 to +40	–10 to +40	%
34-Ω, 48-Ω, 80-Ω, and 240-Ω R_T	Internal parallel termination with calibration (34-Ω, 48-Ω, 80-Ω, and 240-Ω setting)	V_{CCIO} = 1.2	± 15	± 15	± 15	%
40-Ω, 60-Ω, and 120-Ω R_T	Internal parallel termination with calibration (40-Ω, 60-Ω, and 120-Ω setting)	V_{CCIO} = 1.5, 1.35, 1.25, 1.2	–10 to +40	–10 to +40	–10 to +40	%
		V_{CCIO} = 1.2 [27]	± 15	± 15	± 15	%
80-Ω R_T	Internal parallel termination with calibration (80-Ω setting)	V_{CCIO} = 1.2	± 15	± 15	± 15	%

[27] Only applicable to POD12 I/O standard.

OCT Without Calibration Resistance Tolerance Specifications

Table 10. OCT Without Calibration Resistance Tolerance Specifications for Intel Arria 10 Devices

This table lists the Intel Arria 10 OCT without calibration resistance tolerance to PVT changes.

Symbol	Description	Condition (V)	Resistance Tolerance			Unit
			–E1, –I1	–E2, –I2	–E3, –I3	
25-Ω and 50-Ω R_S	Internal series termination without calibration (25-Ω and 50-Ω setting)	V_{CCIO} = 3.0, 2.5	–40 to +30	± 40	± 40	%
		V_{CCIO} = 1.8, 1.5, 1.2	–50 to +30	± 50	± 50	%
34-Ω and 40-Ω R_S	Internal series termination without calibration (34-Ω and 40-Ω setting)	V_{CCIO} = 1.5, 1.35, 1.25, 1.2	–50 to +30	± 50	± 50	%
48-Ω and 60-Ω R_S	Internal series termination without calibration (48-Ω and 60-Ω setting)	V_{CCIO} = 1.2	–50 to +30	± 50	± 50	%
120-Ω R_s	Internal series termination without calibration (120-Ω setting)	V_{CCIO} = 1.2	–50 to +30	± 50	± 50	%
100-Ω R_D	Internal differential termination (100-Ω setting)	V_{CCIO} = 1.8	± 25	± 35	± 40	%

Pin Capacitance

Table 11. Pin Capacitance for Intel Arria 10 Devices

Symbol	Description	Maximum	Unit
C_{IO_COLUMN}	Input capacitance on column I/O pins	2.5	pF
C_{OUTFB}	Input capacitance on dual-purpose clock output/feedback pins	2.5	pF

Internal Weak Pull-Up and Weak Pull-Down Resistor

All I/O pins, except configuration, test, and JTAG pins, have an option to enable weak pull-up. The weak pull-down feature is only available for the pins as described in the Internal Weak Pull-Down Resistor Values for Intel Arria 10 Devices table.

Table 12. Internal Weak Pull-Up Resistor Values for Intel Arria 10 Devices

Symbol	Description	Condition (V) [28]	Value [29]	Unit
R_{PU}	Value of the I/O pin pull-up resistor before and during configuration, as well as user mode if you have enabled the programmable pull-up resistor option.	V_{CCIO} = 3.0 ±5%	25	kΩ
		V_{CCIO} = 2.5 ±5%	25	kΩ
		V_{CCIO} = 1.8 ±5%	25	kΩ
		V_{CCIO} = 1.5 ±5%	25	kΩ
		V_{CCIO} = 1.35 ±5%	25	kΩ
		V_{CCIO} = 1.25 ±5%	25	kΩ
		V_{CCIO} = 1.2 ±5%	25	kΩ

Table 13. Internal Weak Pull-Down Resistor Values for Intel Arria 10 Devices

Pin Name	Description	Condition (V)	Value [29]	Unit
`nIO_PULLUP`	Dedicated input pin that determines the internal pull-ups on user I/O pins and dual-purpose I/O pins.	V_{CC} = 0.9 ±3.33%	25	kΩ
`TCK`	Dedicated JTAG test clock input pin.	V_{CCPGM} = 1.8 ±5 %	25	kΩ
		V_{CCPGM} = 1.5 ±5%	25	kΩ
		V_{CCPGM} = 1.2 ±5%	25	kΩ
`MSEL[0:2]`	Configuration input pins that set the configuration scheme for the FPGA device.	V_{CCPGM} = 1.8 ±5%	25	kΩ
		V_{CCPGM} = 1.5 ±5%	25	kΩ
		V_{CCPGM} = 1.2 ±5%	25	kΩ

Related Information

Intel Arria 10 GX, GT, and SX Device Family Pin Connection Guidelines
Provides more information about the pins that support internal weak pull-up and internal weak pull-down features.

---

(28) Pin pull-up resistance values may be lower if an external source drives the pin higher than V_{CCIO}.

(29) Valid with ±25% tolerances to cover changes over PVT.

I/O Standard Specifications

Tables in this section list the input voltage (V_{IH} and V_{IL}), output voltage (V_{OH} and V_{OL}), and current drive characteristics (I_{OH} and I_{OL}) for various I/O standards supported by Intel Arria 10 devices.

For minimum voltage values, use the minimum V_{CCIO} values. For maximum voltage values, use the maximum V_{CCIO} values.

You must perform timing closure analysis to determine the maximum achievable frequency for general purpose I/O standards.

Related Information

- Recommended Operating Conditions on page 8
- Intel Arria 10 Military Temperature Range Support Technical Brief
  Provides more details on the military requirement.

Single-Ended I/O Standards Specifications

Table 14. Single-Ended I/O Standards Specifications for Intel Arria 10 Devices

I/O Standard	V_{CCIO} (V)			V_{IL} (V)		V_{IH} (V)		V_{OL} (V)	V_{OH} (V)	I_{OL} [30] (mA)	I_{OH} [30] (mA)
	Min	Typ	Max	Min	Max	Min	Max	Max	Min		
3.0-V LVTTL	2.85	3	3.15	–0.3	0.8	1.7	3.3	0.4	2.4	2	–2
3.0-V LVCMOS	2.85	3	3.15	–0.3	0.8	1.7	3.3	0.2	V_{CCIO} – 0.2	0.1	–0.1
2.5 V	2.375	2.5	2.625	–0.3	0.7	1.7	3.3	0.4	2	1	–1
1.8 V	1.71	1.8	1.89	–0.3	0.35 × V_{CCIO}	0.65 × V_{CCIO}	V_{CCIO} + 0.3	0.45	V_{CCIO} – 0.45	2	–2
1.5 V	1.425	1.5	1.575	–0.3	0.35 × V_{CCIO}	0.65 × V_{CCIO}	V_{CCIO} + 0.3	0.25 × V_{CCIO}	0.75 × V_{CCIO}	2	–2
1.2 V	1.14	1.2	1.26	–0.3	0.35 × V_{CCIO}	0.65 × V_{CCIO}	V_{CCIO} + 0.3	0.25 × V_{CCIO}	0.75 × V_{CCIO}	2	–2

(30) To meet the I_{OL} and I_{OH} specifications, you must set the current strength settings accordingly. For example, to meet the 3.0-V LVTTL specification (2 mA), you should set the current strength settings to 2 mA. Setting at lower current strength may not meet the I_{OL} and I_{OH} specifications in the datasheet.

Single-Ended SSTL, HSTL, and HSUL I/O Reference Voltage Specifications

Table 15. Single-Ended SSTL, HSTL, and HSUL I/O Reference Voltage Specifications for Intel Arria 10 Devices

I/O Standard	V_{CCIO} (V)			V_{REF} (V)			V_{TT} (V)		
	Min	Typ	Max	Min	Typ	Max	Min	Typ	Max
SSTL-18 Class I, II	1.71	1.8	1.89	0.833	0.9	0.969	V_{REF} – 0.04	V_{REF}	V_{REF} + 0.04
SSTL-15 Class I, II	1.425	1.5	1.575	0.49 × V_{CCIO}	0.5 × V_{CCIO}	0.51 × V_{CCIO}	0.49 × V_{CCIO}	0.5 × V_{CCIO}	0.51 × V_{CCIO}
SSTL-135/ SSTL-135 Class I, II	1.283	1.35	1.418	0.49 × V_{CCIO}	0.5 × V_{CCIO}	0.51 × V_{CCIO}	0.49 × V_{CCIO}	0.5 × V_{CCIO}	0.51 × V_{CCIO}
SSTL-125/ SSTL-125 Class I, II	1.19	1.25	1.31	0.49 × V_{CCIO}	0.5 × V_{CCIO}	0.51 × V_{CCIO}	0.49 × V_{CCIO}	0.5 × V_{CCIO}	0.51 × V_{CCIO}
SSTL-12/ SSTL-12 Class I, II	1.14	1.2	1.26	0.49 × V_{CCIO}	0.5 × V_{CCIO}	0.51 × V_{CCIO}	0.49 × V_{CCIO}	0.5 × V_{CCIO}	0.51 × V_{CCIO}
HSTL-18 Class I, II	1.71	1.8	1.89	0.85	0.9	0.95	—	V_{CCIO}/2	—
HSTL-15 Class I, II	1.425	1.5	1.575	0.68	0.75	0.9	—	V_{CCIO}/2	—
HSTL-12 Class I, II	1.14	1.2	1.26	0.47 × V_{CCIO}	0.5 × V_{CCIO}	0.53 × V_{CCIO}	—	V_{CCIO}/2	—
HSUL-12	1.14	1.2	1.3	0.49 × V_{CCIO}	0.5 × V_{CCIO}	0.51 × V_{CCIO}	—	—	—
POD12	1.16	1.2	1.24	0.69 × V_{CCIO}	0.7 × V_{CCIO}	0.71 × V_{CCIO}	—	V_{CCIO}	—

Single-Ended SSTL, HSTL, and HSUL I/O Standards Signal Specifications

Table 16. Single-Ended SSTL, HSTL, and HSUL I/O Standards Signal Specifications for Intel Arria 10 Devices

I/O Standard	$V_{IL(DC)}$ (V)		$V_{IH(DC)}$ (V)		$V_{IL(AC)}$ (V)	$V_{IH(AC)}$ (V)	V_{OL} (V)	V_{OH} (V)	I_{OL} [31] (mA)	I_{OH} [31] (mA)
	Min	Max	Min	Max	Max	Min	Max	Min		
SSTL-18 Class I	–0.3	V_{REF} –0.125	V_{REF} + 0.125	V_{CCIO} + 0.3	V_{REF} – 0.25	V_{REF} + 0.25	V_{TT} – 0.603	V_{TT} + 0.603	6.7	–6.7
SSTL-18 Class II	–0.3	V_{REF} –0.125	V_{REF} + 0.125	V_{CCIO} + 0.3	V_{REF} – 0.25	V_{REF} + 0.25	0.28	V_{CCIO} –0.28	13.4	–13.4
SSTL-15 Class I	—	V_{REF} – 0.1	V_{REF} + 0.1	—	V_{REF} – 0.175	V_{REF} + 0.175	0.2 × V_{CCIO}	0.8 × V_{CCIO}	8	–8
SSTL-15 Class II	—	V_{REF} – 0.1	V_{REF} + 0.1	—	V_{REF} – 0.175	V_{REF} + 0.175	0.2 × V_{CCIO}	0.8 × V_{CCIO}	16	–16
SSTL-135/ SSTL-135 Class I, II	—	V_{REF} – 0.09	V_{REF} + 0.09	—	V_{REF} – 0.16	V_{REF} + 0.16	0.2 × V_{CCIO}	0.8 × V_{CCIO}	—	—
SSTL-125/ SSTL-125 Class I, II	—	V_{REF} – 0.09	V_{REF} + 0.09	—	V_{REF} – 0.15	V_{REF} + 0.15	0.2 × V_{CCIO}	0.8 × V_{CCIO}	—	—
SSTL-12/ SSTL-12 Class I, II	—	V_{REF} – 0.10	V_{REF} + 0.10	—	V_{REF} – 0.15	V_{REF} + 0.15	0.2 × V_{CCIO}	0.8 × V_{CCIO}	—	—
HSTL-18 Class I	—	V_{REF} –0.1	V_{REF} + 0.1	—	V_{REF} – 0.2	V_{REF} + 0.2	0.4	V_{CCIO} – 0.4	8	–8
HSTL-18 Class II	—	V_{REF} – 0.1	V_{REF} + 0.1	—	V_{REF} – 0.2	V_{REF} + 0.2	0.4	V_{CCIO} – 0.4	16	–16
HSTL-15 Class I	—	V_{REF} – 0.1	V_{REF} + 0.1	—	V_{REF} – 0.2	V_{REF} + 0.2	0.4	V_{CCIO} – 0.4	8	–8
HSTL-15 Class II	—	V_{REF} – 0.1	V_{REF} + 0.1	—	V_{REF} – 0.2	V_{REF} + 0.2	0.4	V_{CCIO} –0.4	16	–16
HSTL-12 Class I	–0.15	V_{REF} – 0.08	V_{REF} + 0.08	V_{CCIO} + 0.15	V_{REF} – 0.15	V_{REF} + 0.15	0.25 × V_{CCIO}	0.75 × V_{CCIO}	8	–8

continued...

(31) To meet the I_{OL} and I_{OH} specifications, you must set the current strength settings accordingly. For example, to meet the SSTL15CI specification (8 mA), you should set the current strength settings to 8 mA. Setting at lower current strength may not meet the I_{OL} and I_{OH} specifications in the datasheet.

I/O Standard	$V_{IL(DC)}$ (V)		$V_{IH(DC)}$ (V)		$V_{IL(AC)}$ (V)	$V_{IH(AC)}$ (V)	V_{OL} (V)	V_{OH} (V)	I_{OL} (31) (mA)	I_{OH} (31) (mA)
	Min	Max	Min	Max	Max	Min	Max	Min		
HSTL-12 Class II	–0.15	V_{REF} – 0.08	V_{REF} + 0.08	V_{CCIO} + 0.15	V_{REF} – 0.15	V_{REF} + 0.15	0.25 × V_{CCIO}	0.75 × V_{CCIO}	16	–16
HSUL-12	—	V_{REF} – 0.13	V_{REF} + 0.13	—	V_{REF} – 0.22	V_{REF} + 0.22	0.1 × V_{CCIO}	0.9 × V_{CCIO}	—	—
POD12	–0.15	V_{REF} – 0.08	V_{REF} + 0.08	V_{CCIO} + 0.15	V_{REF} – 0.15	V_{REF} + 0.15	(0.7 – 0.15) × V_{CCIO}	(0.7 + 0.15) × V_{CCIO}	—	—

Differential SSTL I/O Standards Specifications

Table 17. Differential SSTL I/O Standards Specifications for Intel Arria 10 Devices

I/O Standard	V_{CCIO} (V)			$V_{SWING(DC)}$ (V)		$V_{SWING(AC)}$ (V)		$V_{IX(AC)}$ (V)		
	Min	Typ	Max	Min	Max	Min	Max	Min	Typ	Max
SSTL-18 Class I, II	1.71	1.8	1.89	0.25	V_{CCIO} + 0.6	0.5	V_{CCIO} + 0.6	$V_{CCIO}/2$ – 0.175	—	$V_{CCIO}/2$ + 0.175
SSTL-15 Class I, II	1.425	1.5	1.575	0.2	(32)	2($V_{IH(AC)}$ – V_{REF})	2(V_{REF} – $V_{IL(AC)}$)	$V_{CCIO}/2$ – 0.15	—	$V_{CCIO}/2$ + 0.15
SSTL-135/ SSTL-135 Class I, II	1.283	1.35	1.45	0.18	(32)	2($V_{IH(AC)}$ – V_{REF})	2($V_{IL(AC)}$ – V_{REF})	$V_{CCIO}/2$ – 0.15	$V_{CCIO}/2$	$V_{CCIO}/2$ + 0.15

continued...

(31) To meet the I_{OL} and I_{OH} specifications, you must set the current strength settings accordingly. For example, to meet the SSTL15CI specification (8 mA), you should set the current strength settings to 8 mA. Setting at lower current strength may not meet the I_{OL} and I_{OH} specifications in the datasheet.

(32) The maximum value for $V_{SWING(DC)}$ is not defined. However, each single-ended signal needs to be within the respective single-ended limits ($V_{IH(DC)}$ and $V_{IL(DC)}$).

I/O Standard	V_{CCIO} (V)			$V_{SWING(DC)}$ (V)		$V_{SWING(AC)}$ (V)		$V_{IX(AC)}$ (V)		
	Min	Typ	Max	Min	Max	Min	Max	Min	Typ	Max
SSTL-125/ SSTL-125 Class I, II	1.19	1.25	1.31	0.18	(32)	$2(V_{IH(AC)} - V_{REF})$	$2(V_{IL(AC)} - V_{REF})$	$V_{CCIO}/2 - 0.15$	$V_{CCIO}/2$	$V_{CCIO}/2 + 0.15$
SSTL-12/ SSTL-12 Class I, II	1.14	1.2	1.26	0.16	(32)	$2(V_{IH(AC)} - V_{REF})$	$2(V_{IL(AC)} - V_{REF})$	$V_{REF} - 0.15$	$V_{CCIO}/2$	$V_{REF} + 0.15$
POD12	1.16	1.2	1.24	0.16	—	0.3	—	$V_{REF} - 0.08$	—	$V_{REF} + 0.08$

Differential HSTL and HSUL I/O Standards Specifications

Table 18. Differential HSTL and HSUL I/O Standards Specifications for Intel Arria 10 Devices

I/O Standard	V_{CCIO} (V)			$V_{DIF(DC)}$ (V)		$V_{DIF(AC)}$ (V)		$V_{IX(AC)}$ (V)			$V_{CM(DC)}$ (V)		
	Min	Typ	Max	Min	Max	Min	Max	Min	Typ	Max	Min	Typ	Max
HSTL-18 Class I, II	1.71	1.8	1.89	0.2	—	0.4	—	0.78	—	1.12	0.78	—	1.12
HSTL-15 Class I, II	1.425	1.5	1.575	0.2	—	0.4	—	0.68	—	0.9	0.68	—	0.9
HSTL-12 Class I, II	1.14	1.2	1.26	0.16	$V_{CCIO} + 0.3$	0.3	$V_{CCIO} + 0.48$	—	$0.5 \times V_{CCIO}$	—	$0.4 \times V_{CCIO}$	$0.5 \times V_{CCIO}$	$0.6 \times V_{CCIO}$
HSUL-12	1.14	1.2	1.3	$2(V_{IH(DC)} - V_{REF})$	$2(V_{REF} - V_{IH(DC)})$	$2(V_{IH(AC)} - V_{REF})$	$2(V_{REF} - V_{IH(AC)})$	$0.5 \times V_{CCIO} - 0.12$	$0.5 \times V_{CCIO}$	$0.5 \times V_{CCIO} + 0.12$	$0.4 \times V_{CCIO}$	$0.5 \times V_{CCIO}$	$0.6 \times V_{CCIO}$

Differential I/O Standards Specifications

Table 19. Differential I/O Standards Specifications for Intel Arria 10 Devices

Differential inputs are powered by V_{CCPT} which requires 1.8 V.

I/O Standard	V_{CCIO} (V)			V_{ID} (mV) (33)			$V_{ICM(DC)}$ (V)			V_{OD} (V) (34)			V_{OCM} (V) (34)		
	Min	Typ	Max	Min	Condition	Max	Min	Condition	Max	Min	Typ	Max	Min	Typ	Max
LVDS (35)	1.71	1.8	1.89	100	V_{CM} = 1.25 V	—	0	D_{MAX} ≤700 Mbps	1.85	0.247	—	0.6	1.125	1.25	1.375
							1	D_{MAX} >700 Mbps	1.6						
RSDS (36)	1.71	1.8	1.89	100	V_{CM} = 1.25 V	—	0.3	—	1.4	0.1	0.2	0.6	0.5	1.2	1.4
Mini-LVDS (37)	1.71	1.8	1.89	200	—	600	0.4	—	1.325	0.25	—	0.6	1	1.2	1.4
LVPECL (38)	1.71	1.8	1.89	300	—	—	0.6	D_{MAX} ≤700 Mbps	1.7	—	—	—	—	—	—
							1	D_{MAX} >700 Mbps	1.6						

Related Information

Transceiver Specifications for Intel Arria 10 GX, SX, and GT Devices on page 29
Provides the specifications for transmitter, receiver, and reference clock I/O pin.

(33) The minimum V_{ID} value is applicable over the entire common mode range, V_{CM}.

(34) R_L range: $90 \leq R_L \leq 110\ \Omega$.

(35) For optimized LVDS receiver performance, the receiver voltage input range must be within 1.0 V to 1.6 V for data rates above 700 Mbps and 0 V to 1.85 V for data rates below 700 Mbps.

(36) For optimized RSDS receiver performance, the receiver voltage input range must be between 0.25 V to 1.45 V.

(37) For optimized Mini-LVDS receiver performance, the receiver voltage input range must be between 0.1 V to 1.625 V.

(38) For optimized LVPECL receiver performance, the receiver voltage input range must be within 0.85 V to 1.75 V for data rates above 700 Mbps and 0.45 V to 1.95 V for data rates below 700 Mbps.

Switching Characteristics

This section provides the performance characteristics of Intel Arria 10 core and periphery blocks for extended grade devices.

Transceiver Performance Specifications

Transceiver Performance for Intel Arria 10 GX/SX Devices

Table 20. Transmitter and Receiver Data Rate Performance

Symbol/Description	Condition	Transceiver Speed Grade 1	Transceiver Speed Grade 2	Transceiver Speed Grade 3	Transceiver Speed Grade 4	Unit
Chip-to-Chip [39]	Maximum data rate $V_{CCR_GXB} = V_{CCT_GXB} = 1.03$ V	17.4	15	14.2	12.5	Gbps
	Maximum data rate $V_{CCR_GXB} = V_{CCT_GXB} = 0.95$ V	11.3	11.3	11.3	11.3	Gbps
	Minimum Data Rate	1.0 [40]				Gbps
Backplane [39]	Maximum data rate $V_{CCR_GXB} = V_{CCT_GXB} = 1.03$ V	12.5	12.5	12.5	10.3125	Gbps
	Minimum Data Rate	1.0 [40]				Gbps

Table 21. ATX PLL Performance

Symbol/Description	Condition	Transceiver Speed Grade 1	Transceiver Speed Grade 2	Transceiver Speed Grade 3	Transceiver Speed Grade 4	Unit
Supported Output Frequency	Maximum Frequency	8.7	7.5	7.1	6.25	GHz
	Minimum Frequency	500				MHz

(39) Backplane applications assume advanced equalization circuitry, such as decision feedback equalization (DFE), is enabled to compensate for signal impairments. Chip-to-chip links are assumed to be applications with short reach channels that do not require DFE.

(40) Intel Arria 10 transceivers can support data rates down to 125 Mbps with over sampling.

Table 22. Fractional PLL Performance

Symbol/Description	Condition	Transceiver Speed Grade 1	Transceiver Speed Grade 2	Transceiver Speed Grade 3	Transceiver Speed Grade 4	Unit
Supported Output Frequency	Maximum Frequency	6.25	6.25	6.25	6.25	GHz
	Minimum Frequency	500				MHz

Table 23. CMU PLL Performance

Symbol/Description	Condition	Transceiver Speed Grade 1	Transceiver Speed Grade 2	Transceiver Speed Grade 3	Transceiver Speed Grade 4	Unit
Supported Output Frequency	Maximum Frequency	5.15625	5.15625	5.15625	5.15625	GHz
	Minimum Frequency	2450				MHz

Related Information

Transceiver Power Supply Operating Conditions on page 10

High-Speed Serial Transceiver-Fabric Interface Performance for Intel Arria 10 GX/SX Devices

Table 24. High-Speed Serial Transceiver-Fabric Interface Performance for Intel Arria 10 GX/SX Devices

The frequencies listed are the maximum frequencies.

Symbol/Description	Condition (V)	Core Speed Grade with Power Options			Unit
		-E1H	-E2 / -I2	-E3 / -I3	
20-bit interface - FIFO	V_{CC} = 0.9/0.95	516	400	400	MHz
20-bit interface - Registered	V_{CC} = 0.9/0.95	491	400	400	MHz
32-bit interface - FIFO	V_{CC} = 0.9/0.95	441	404	335	MHz
32-bit interface - Registered	V_{CC} = 0.9/0.95	441	404	335	MHz
64-bit interface - FIFO	V_{CC} = 0.9/0.95	272	234	222	MHz
64-bit interface - Registered	V_{CC} = 0.9/0.95	272	234	222	MHz
PCIe Gen3 HIP-Fabric interface	V_{CC} = 0.9/0.95	300	250	125	MHz

Transceiver Performance for Intel Arria 10 GT Devices

Table 25. Transmitter and Receiver Data Rate Performance

Symbol/Description	Condition		Transceiver Speed Grade 1	Transceiver Speed Grade 2	Unit
Chip-to-chip [41]	Maximum data rate V_{CCR_GXB} = V_{CCT_GXB} = 1.12 V	GT Channel [42]	25.8	25.8	Gbps
		GX Channel	17.4	15	Gbps
	Maximum data rate V_{CCR_GXB} = V_{CCT_GXB} = 1.03 V	GX Channel	16	14.2	Gbps
	Maximum data rate V_{CCR_GXB} = V_{CCT_GXB} = 0.95 V	GX Channel	11.3	11.3	Gbps
	Minimum data rate	GT Channel	1.0 [43]		Gbps
		GX Channel			
Backplane [41]	Maximum data rate V_{CCR_GXB} = V_{CCT_GXB} = 1.12 V	GX Channel	12.5	12.5	Gbps
	Maximum data rate V_{CCR_GXB} = V_{CCT_GXB} = 1.03 V	GX Channel	12.5	12.5	Gbps
	Minimum data rate	GX Channel	1.0 [43]		Gbps

Table 26. ATX PLL Performance

Symbol/Description	Condition	Transceiver Speed Grade 1	Transceiver Speed Grade 2	Unit
Supported Output Frequency	Maximum frequency	12.9		GHz
	Minimum frequency	500		MHz

(41) Backplane applications assume advanced equalization circuitry, such as decision feedback equalization (DFE), is enabled to compensate for signal impairments. Chip-to-chip links are assumed to be applications with short reach channels that do not require DFE.

(42) GT channels can only achieve 25.8 Gbps when V_{CCT_GXB} = 1.12 V and V_{CCR_GXB} = 1.12 V.

(43) Intel Arria 10 transceivers can support data rates down to 125 Mbps with over sampling.

Table 27. Fractional PLL Performance

Symbol/Description	Condition	Transceiver Speed Grade 1	Transceiver Speed Grade 2	Unit
Supported Output Frequency	Maximum frequency	6.25		GHz
	Minimum frequency	500		MHz

Table 28. CMU PLL Performance

Symbol/Description	Condition	Transceiver Speed Grade 1	Transceiver Speed Grade 2	Unit
Supported Output Frequency	Maximum frequency	5.15625		GHz
	Minimum frequency	2450		MHz

Related Information

Transceiver Power Supply Operating Conditions on page 10

High-Speed Serial Transceiver-Fabric Interface Performance for Intel Arria 10 GT Devices

Table 29. High-Speed Serial Transceiver-Fabric Interface Performance for Intel Arria 10 GT Devices

The frequencies listed are the maximum frequencies.

Symbol/Description	Condition (V)	Core Speed Grade with Power Options		Unit
		-1	-2	
20-bit interface - FIFO	V_{CC} = 0.9/0.95	400		MHz
20-bit interface - Registered	V_{CC} = 0.9/0.95	400		MHz
32-bit interface - FIFO	V_{CC} = 0.9/0.95	404		MHz
32-bit interface - Registered	V_{CC} = 0.9/0.95	404		MHz
64-bit interface - FIFO	V_{CC} = 0.9/0.95	407		MHz
64-bit interface - Registered	V_{CC} = 0.9/0.95	407		MHz
PCIe Gen3 HIP-Fabric interface	V_{CC} = 0.9/0.95	250		MHz

Transceiver Specifications for Intel Arria 10 GX, SX, and GT Devices

Table 30. Reference Clock Specifications

Symbol/Description	Condition	All Transceiver Speed Grades			Unit
		Min	Typ	Max	
Supported I/O Standards	Dedicated reference clock pin	CML, Differential LVPECL, LVDS, and HCSL			
	RX reference clock pin	CML, Differential LVPECL, and LVDS			
Input Reference Clock Frequency (CMU PLL)		61	—	800	MHz
Input Reference Clock Frequency (ATX PLL)		100	—	800	MHz
Input Reference Clock Frequency (fPLL PLL)		25 (44) / 50 (45)	—	800	MHz
Rise time	20% to 80%	—	—	400	ps
Fall time	80% to 20%	—	—	400	ps
Duty cycle	—	45	—	55	%
Spread-spectrum modulating clock frequency	PCIe	30	—	33	kHz
Spread-spectrum downspread	PCIe	—	0 to –0.5	—	%
On-chip termination resistors	—	—	100	—	Ω
Absolute V_{MAX}	Dedicated reference clock pin	—	—	1.6	V
	RX reference clock pin	—	—	1.2	V
Absolute V_{MIN}	—	–0.4	—	—	V
Peak-to-peak differential input voltage	—	200	—	1600	mV
V_{ICM} (AC coupled)	V_{CCR_GXB} = 0.95 V	—	0.95	—	V

continued...

(44) This specification is for HDMI mode only.

(45) This specification is for other non-HDMI modes.

Symbol/Description	Condition	All Transceiver Speed Grades			Unit
		Min	Typ	Max	
	V_{CCR_GXB} = 1.03 V	—	1.03	—	V
	V_{CCR_GXB} = 1.12 V	—	1.12	—	V
V_{ICM} (DC coupled)	HCSL I/O standard for PCIe reference clock	250	—	550	mV
Transmitter REFCLK Phase Noise (622 MHz) (46)	100 Hz	—	—	–70	dBc/Hz
	1 kHz	—	—	–90	dBc/Hz
	10 kHz	—	—	–100	dBc/Hz
	100 kHz	—	—	–110	dBc/Hz
	≥ 1 MHz	—	—	–120	dBc/Hz
Transmitter REFCLK Phase Jitter (100 MHz)	1.5 MHz to 100 MHz (PCIe)	—	—	4.2	ps (rms)
R_{REF}	—	—	2.0 k ±1%	—	Ω
$T_{SSC\text{-}MAX\text{-}PERIOD\text{-}SLEW}$	Max SSC df/dt			0.75	

Table 31. Transceiver Clocks Specifications

Symbol/Description	Condition	All Transceiver Speed Grades			Unit
		Min	Typ	Max	
CLKUSR pin for transceiver calibration	Transceiver Calibration	100	—	125	MHz
reconfig_clk	Reconfiguration interface	100	—	125	MHz

(46) To calculate the REFCLK phase noise requirement at frequencies other than 622 MHz, use the following formula: REFCLK phase noise at f (MHz) = REFCLK phase noise at 622 MHz + 20*log(f/622).

Table 32. Transceiver Clock Network Maximum Data Rate Specifications

Clock Network	Maximum Performance [47]			Channel Span	Unit
	ATX	fPLL	CMU		
x1	17.4	12.5	10.3125	6 channels in a single bank	Gbps
x6	17.4	12.5	N/A	6 channels in a single bank	Gbps
PLL feedback compensation mode	17.4	12.5	N/A	Side-wide	Gbps
xN at 0.95 V V_{CCR_GXB}/ V_{CCT_GXB}	10.5	10.5	N/A	Up two banks and down two banks [47] [48]	Gbps
xN at 1.03 V V_{CCR_GXB}/ V_{CCT_GXB}	15.0	12.5	N/A	Up two banks and down two banks[47] [48]	Gbps
xN at 1.12 V V_{CCR_GXB}/ V_{CCT_GXB}	16.0	12.5	N/A	Up two banks and down two banks[47] [48]	Gbps

Table 33. Receiver Specifications

Symbol/Description	Condition	All Transceiver Speed Grades			Unit
		Min	Typ	Max	
Supported I/O Standards	—	High Speed Differential I/O, CML , Differential LVPECL , and LVDS[49]			
Absolute V_{MAX} for a receiver pin [50]	—	—	—	1.2	V
Absolute V_{MIN} for a receiver pin [50]	—	-0.4	—	—	V

continued...

(47) The maximum data rate depends on speed grade.

(48) For more information, refer to the PLLs and Clock Networks chapter of the *Intel Arria 10 Transceiver PHY User Guide*.

(49) CML, Differential LVPECL, and LVDS are only used on AC coupled links.

(50) The device cannot tolerate prolonged operation at this absolute maximum.

Symbol/Description	Condition	All Transceiver Speed Grades			Unit
		Min	Typ	Max	
Maximum peak-to-peak differential input voltage V_{ID} (diff p-p) before device configuration	—	—	—	1.6	V
Maximum peak-to-peak differential input voltage V_{ID} (diff p-p) after device configuration	V_{CCR_GXB} = 1.12 V	—	—	2.0	V
	V_{CCR_GXB} = 1.03 V	—	—	2.0	V
	V_{CCR_GXB} = 0.95 V	—	—	2.4	V
Minimum differential eye opening at receiver serial input pins (51)	—	50	—	—	mV
Differential on-chip termination resistors	85-Ω setting	—	85 ± 30%	—	Ω
	100-Ω setting	—	100 ± 30%	—	Ω
V_{ICM} (AC and DC coupled) (52)	V_{CCR_GXB} = 0.95 V	—	600	—	mV
	V_{CCR_GXB} = 1.03 V	—	700	—	mV
	V_{CCR_GXB} = 1.12 V	—	700	—	mV
t_{LTR} (53)	—	—	—	10	µs
t_{LTD} (54)	—	4	—	—	µs
t_{LTD_manual} (55)	—	4	—	—	µs

continued...

(51) The differential eye opening specification at the receiver input pins assumes that Receiver Equalization is disabled. If you enable Receiver Equalization, the receiver circuitry can tolerate a lower minimum eye opening, depending on the equalization level.

(52) Intel Arria 10 devices only support DC coupling when using the Hybrid Memory Cube (HMC) or the Intel QuickPath Interconnect (QPI) specifications.

(53) t_{LTR} is the time required for the receive CDR to lock to the input reference clock frequency after coming out of reset.

(54) t_{LTD} is time required for the receiver CDR to start recovering valid data after the `rx_is_lockedtodata` signal goes high.

Symbol/Description	Condition	All Transceiver Speed Grades			Unit
		Min	Typ	Max	
$t_{LTR_LTD_manual}$[56]	—	15	—	—	µs
Run Length	—	—	—	200	UI
CDR PPM tolerance	PCIe-only	-300	—	300	PPM
	All other protocols	-1000	—	1000	PPM
Programmable DC Gain	Setting = 0-4	0	—	10	dB
Programmable AC Gain at High Gain mode and Data Rate ≤ 6 Gbps with 0.95 V V_{CCR}	Setting = 0-28	0	—	19	dB
Programmable AC Gain at High Gain mode and Data Rate ≤ 6 Gpbs with 1.03 V V_{CCR}	Setting = 0-28	0	—	21	dB
Programmable AC Gain at High Gain mode and Data Rate ≤ 17.4 Gpbs with 1.03 V V_{CCR}	Setting = 0-28	0	—	17	dB
Programmable AC Gain at High Data Rate mode	Setting = 0-15	0	—	8	dB

(55) t_{LTD_manual} is the time required for the receiver CDR to start recovering valid data after the `rx_is_lockedtodata` signal goes high when the CDR is functioning in the manual mode.

(56) $t_{LTR_LTD_manual}$ is the time the receiver CDR must be kept in lock to reference (LTR) mode after the `rx_is_lockedtoref` signal goes high when the CDR is functioning in the manual mode.

Table 34. Transmitter Specifications

Symbol/Description	Condition	All Transceiver Speed Grades			Unit
		Min	Typ	Max	
Supported I/O Standards	—	High Speed Differential I/O [57]			—
Differential on-chip termination resistors	85-Ω setting	—	85 ± 20%	—	Ω
	100-Ω setting	—	100 ± 20%	—	Ω
V_{OCM} (AC coupled)	V_{CCT} = 0.95 V	—	450	—	mV
	V_{CCT} = 1.03 V	—	500	—	mV
	V_{CCT} = 1.12 V	—	550	—	mV
V_{OCM} (DC coupled)	V_{CCT} = 0.95 V	—	450	—	mV
	V_{CCT} = 1.03 V	—	500	—	mV
	V_{CCT} = 1.12 V	—	550	—	mV
Rise time [58]	20% to 80%	20	—	130	ps
Fall time [58]	80% to 20%	20	—	130	ps
Intra-differential pair skew [59]	TX V_{CM} = 0.5 V and slew rate setting of SLEW_R5 [60]	—	—	15	ps

(57) High Speed Differential I/O is the dedicated I/O standard for the transmitter in Intel Arria 10 transceivers.

(58) The Intel Quartus Prime software automatically selects the appropriate slew rate depending on the design configurations.

(59) In QPI mode, if V_{CM} < 0.17 V, the input Vid must be greater than 100 mV. If V_{CM} > 0.17 V, the input Vid must be greater than 70 mV.

(60) SLEW_R1 is the slowest and SLEW_R5 is the fastest. SLEW_R6 and SLEW_R7 are not used.

Table 35. Typical Transmitter V_{OD} Settings

Symbol	V_{OD} Setting	V_{OD}-to-V_{CCT} Ratio
V_{OD} differential value = V_{OD}-to-V_{CCT} ratio x V_{CCT}	31	1.00
	30	0.97
	29	0.93
	28	0.90
	27	0.87
	26	0.83
	25	0.80
	24	0.77
	23	0.73
	22	0.70
	21	0.67
	20	0.63
	19	0.60
	18	0.57
	17	0.53
	16	0.50
	15	0.47
	14	0.43
	13	0.40
	12	0.37

Table 36. Transmitter Channel-to-channel Skew Specifications

Mode	Channel Span	Maximum Skew	Unit
x6 Clock	Up to 6 channels in one bank	61	ps
xN Clock	Within 2 banks	230	ps
	Up 2 banks and down 2 banks	500	
PLL Feedback Compensation (61), (62), (63)	Side-wide	1600	ps

Related Information

PLLs and Clock Networks

Core Performance Specifications

Clock Tree Specifications

Table 37. Clock Tree Performance for Intel Arria 10 Devices

Parameter	Performance (All Speed Grades)	Unit
Global clock, regional clock, and small periphery clock	644	MHz
Large periphery clock	525	MHz

(61) `refclk` is set to 125 MHz during the test.

(62) You can reduce the lane-to-lane skew by increasing the reference clock frequency.

(63) The middle `refclk` location provides the lowest lane-to-lane skew.

PLL Specifications

Fractional PLL Specifications

Table 38. Fractional PLL Specifications for Intel Arria 10 Devices

Symbol	Parameter	Condition	Min	Typ	Max	Unit
f_{IN}	Input clock frequency	—	30	—	800 (64)	MHz
f_{INPFD}	Input clock frequency to the phase frequency detector (PFD)	—	30	—	700	MHz
f_{CASC_INPFD}	Input clock frequency to the PFD of destination cascade PLL	—	30	—	60	MHz
f_{VCO}	PLL voltage-controlled oscillator (VCO) operating range	—	6	—	14.025	GHz
$t_{EINDUTY}$	Input clock duty cycle	—	45	—	55	%
f_{OUT}	Output frequency for internal global or regional clock	—	—	—	644	MHz
$f_{DYCONFIGCLK}$	Dynamic configuration clock for `reconfig_clk`	—	—	—	100	MHz
t_{LOCK}	Time required to lock from end-of-device configuration or deassertion of `pll_powerdown`	—	—	—	1	ms
t_{DLOCK}	Time required to lock dynamically (after switchover or reconfiguring any non-post-scale counters/delays)	—	—	—	1	ms
f_{CLBW}	PLL closed-loop bandwidth	—	0.3	—	4	MHz
t_{PLL_PSERR}	Accuracy of PLL phase shift	Non-SmartVID	—	—	50	ps
		SmartVID	—	—	75	ps

continued...

(64) This specification is limited by the I/O maximum frequency. The maximum achievable I/O frequency is different for each I/O standard and is depends on design and system specific factors. Ensure proper timing closure in your design and perform HSPICE/IBIS simulations based on your specific design and system setup to determine the maximum achievable frequency in your system.

Symbol	Parameter	Condition	Min	Typ	Max	Unit
t_{ARESET}	Minimum pulse width on the `pll_powerdown` signal	—	10	—	—	ns
t_{INCCJ} (65)(66)	Input clock cycle-to-cycle jitter	$F_{REF} \geq 100$ MHz	—	—	0.13	UI (p-p)
		$F_{REF} < 100$ MHz	—	—	650	ps (p-p)
t_{OUTPJ} (67)	Period jitter for clock output	$F_{OUT} \geq 100$ MHz	—	—	600	ps (p-p)
		$F_{OUT} < 100$ MHz	—	—	60	mUI (p-p)
t_{OUTCCJ} (67)	Cycle-to-cycle jitter for clock output	$F_{OUT} \geq 100$ MHz	—	—	600	ps (p-p)
		$F_{OUT} < 100$ MHz	—	—	60	mUI (p-p)
dK_{BIT}	Bit number of Delta Sigma Modulator (DSM)	—	—	32	—	bit

Related Information

- Memory Output Clock Jitter Specifications on page 53
  Provides more information about the external memory interface clock output jitter specifications.
- KDB link: How do I compensate for the jitter of PLL cascading or non-dedicated clock path for Intel Arria 10 PLL reference clock?
  For the Intel Quartus Prime software version prior to 17.1, the fPLL output may experience additional jitter. The additional jitter occurs if you source the reference clock from a cascaded PLL output, global clock, or core clock. To compensate for the jitter, the designs require additional constraints. This issue has been fixed in the Intel Quartus Prime software version 17.1.

(65) A high input jitter directly affects the PLL output jitter. To have low PLL output clock jitter, you must provide a clean clock source with jitter < 120 ps.

(66) F_{REF} is f_{IN}/N, specification applies when $N = 1$.

(67) External memory interface clock output jitter specifications use a different measurement method, which are available in Memory Output Clock Jitter Specification for Intel Arria 10 Devices table.

I/O PLL Specifications

Table 39. I/O PLL Specifications for Intel Arria 10 Devices

Symbol	Parameter	Condition	Min	Typ	Max	Unit
f_{IN}	Input clock frequency	–1 speed grade	10	—	800 (68)	MHz
		–2 speed grade	10	—	700 (68)	MHz
		–3 speed grade	10	—	650 (68)	MHz
f_{INPFD}	Input clock frequency to the PFD	—	10	—	325	MHz
f_{CASC_INPFD}	Input clock frequency to the PFD of destination cascade PLL	—	10	—	60	MHz
f_{VCO}	PLL VCO operating range	–1 speed grade	600	—	1600	MHz
		–2 speed grade	600	—	1434	MHz
		–3 speed grade	600	—	1250	MHz
f_{CLBW}	PLL closed-loop bandwidth	—	0.1	—	8	MHz
$t_{EINDUTY}$	Input clock or external feedback clock input duty cycle	—	40	—	60	%
f_{OUT}	Output frequency for internal global or regional clock (C counter)	–1, –2, –3 speed grade	—	—	644	MHz
f_{OUT_EXT}	Output frequency for external clock output	–1 speed grade	—	—	800	MHz
		–2 speed grade	—	—	720	MHz
		–3 speed grade	—	—	650	MHz
$t_{OUTDUTY}$	Duty cycle for dedicated external clock output (when set to 50%)	Non-SmartVID	45	50	55	%
		SmartVID	42	50	58	%
t_{FCOMP}	External feedback clock compensation time	—	—	—	10	ns

continued...

(68) This specification is limited by the I/O maximum frequency. The maximum achievable I/O frequency is different for each I/O standard and is depends on design and system specific factors. Ensure proper timing closure in your design and perform HSPICE/IBIS simulations based on your specific design and system setup to determine the maximum achievable frequency in your system.

Symbol	Parameter	Condition	Min	Typ	Max	Unit
$f_{DYCONFIGCLK}$	Dynamic configuration clock for `mgmt_clk` and `scanclk`	—	—	—	100	MHz
t_{LOCK}	Time required to lock from end-of-device configuration or deassertion of `areset`	—	—	—	1	ms
t_{DLOCK}	Time required to lock dynamically (after switchover or reconfiguring any non-post-scale counters/delays)	—	—	—	1	ms
t_{PLL_PSERR}	Accuracy of PLL phase shift	—	—	—	±50	ps
t_{ARESET}	Minimum pulse width on the `areset` signal	—	10	—	—	ns
t_{INCCJ} (69)(70)	Input clock cycle-to-cycle jitter	$F_{REF} \geq 100$ MHz	—	—	0.15	UI (p-p)
		$F_{REF} < 100$ MHz	—	—	750	ps (p-p)
t_{OUTPJ_DC}	Period jitter for dedicated clock output	$F_{OUT} \geq 100$ MHz	—	—	175	ps (p-p)
		$F_{OUT} < 100$ MHz	—	—	17.5	mUI (p-p)
t_{OUTCCJ_DC}	Cycle-to-cycle jitter for dedicated clock output	$F_{OUT} \geq 100$ MHz	—	—	175	ps (p-p)
		$F_{OUT} < 100$ MHz	—	—	17.5	mUI (p-p)
t_{OUTPJ_IO} (71)	Period jitter for clock output on the regular I/O	$F_{OUT} \geq 100$ MHz	—	—	600	ps (p-p)
		$F_{OUT} < 100$ MHz	—	—	60	mUI (p-p)
t_{OUTCCJ_IO} (71)	Cycle-to-cycle jitter for clock output on the regular I/O	$F_{OUT} \geq 100$ MHz	—	—	600	ps (p-p)
		$F_{OUT} < 100$ MHz	—	—	60	mUI (p-p)
$t_{CASC_OUTPJ_DC}$	Period jitter for dedicated clock output in cascaded PLLs	$F_{OUT} \geq 100$ MHz	—	—	175	ps (p-p)
		$F_{OUT} < 100$ MHz	—	—	17.5	mUI (p-p)

(69) A high input jitter directly affects the PLL output jitter. To have low PLL output clock jitter, you must provide a clean clock source with jitter < 120 ps.

(70) F_{REF} is f_{IN}/N, specification applies when $N = 1$.

(71) External memory interface clock output jitter specifications use a different measurement method, which are available in Memory Output Clock Jitter Specification for Intel Arria 10 Devices table.

Related Information

- Memory Output Clock Jitter Specifications on page 53
  Provides more information about the external memory interface clock output jitter specifications.
- KDB link: How do I compensate for the jitter of PLL cascading or non-dedicated clock path for Intel Arria 10 PLL reference clock?
  For the Intel Quartus Prime software version prior to 17.1, the I/O PLL output may experience additional jitter. The additional jitter occurs if you source the reference clock from a cascaded PLL output, global clock, or core clock. To compensate for the jitter, the designs require additional constraints. This issue has been fixed in the Intel Quartus Prime software version 17.1.

DSP Block Specifications

Table 40. DSP Block Performance Specifications for Intel Arria 10 Devices (V_{CC} and V_{CCP} at 0.9 V Typical Value)

Mode	Performance						Unit
	–E1S, –E1H	–I1S, –I1H	–E2L, –E2S	–I2L, –I2S	–E3S, –E3V	–I3S, –I3V	
Fixed-point 18 × 19 multiplication mode	548	528	456	438	364	346	MHz
Fixed-point 27 × 27 multiplication mode	541	522	450	434	358	344	MHz
Fixed-point 18 × 18 multiplier adder mode	548	529	459	440	370	351	MHz
Fixed-point 18 × 18 multiplier adder summed with 36-bit input mode	539	517	444	422	349	326	MHz
Fixed-point 18 × 19 systolic mode	548	529	459	440	370	351	MHz
Complex 18 × 19 multiplication mode	548	528	456	438	364	346	MHz
Floating point multiplication mode	548	527	447	427	347	326	MHz
Floating point adder or subtract mode	488	471	388	369	288	266	MHz
Floating point multiplier adder or subtract mode	483	465	386	368	290	270	MHz
Floating point multiplier accumulate mode	510	490	418	393	326	294	MHz
Floating point vector one mode	502	482	404	382	306	282	MHz
Floating point vector two mode	474	455	383	367	293	278	MHz

Table 41. DSP Block Performance Specifications for Intel Arria 10 Devices (V_{CC} and V_{CCP} at 0.95 V Typical Value)

Mode	Performance		Unit
	–I1S, –I1H	–I2L, –I2S	
Fixed-point 18 × 19 multiplication mode	635	517	MHz
Fixed-point 27 × 27 multiplication mode	633	517	MHz
Fixed-point 18 × 18 multiplier adder mode	635	516	MHz
Fixed-point 18 × 18 multiplier adder summed with 36-bit input mode	631	509	MHz
Fixed-point 18 × 19 systolic mode	635	516	MHz
Complex 18 × 19 multiplication mode	635	517	MHz
Floating point multiplication mode	635	501	MHz
Floating point adder or subtract mode	564	468	MHz
Floating point multiplier adder or subtract mode	564	475	MHz
Floating point multiplier accumulate mode	581	482	MHz
Floating point vector one mode	574	471	MHz
Floating point vector two mode	550	450	MHz

Memory Block Specifications

To achieve the maximum memory block performance, use a memory block clock that comes through global clock routing from an on-chip PLL and set to **50%** output duty cycle. Use the Intel Quartus Prime software to report timing for the memory block clocking schemes.

When you use the error detection cyclical redundancy check (CRC) feature, there is no degradation in f_{MAX}.

Table 42. Memory Block Performance Specifications for Intel Arria 10 Devices (V_{CC} and V_{CCP} at 0.9 V Typical Value)

Memory	Mode	Performance					
		–E1S, –E1H	–I1S, –I1H	–E2L, –E2S, –I2L, –I2S	–E3S, –E3V	–I3S, –I3V	Unit
MLAB	Single port, all supported widths (×16/×32)	700	660	570	490	490	MHz
	Simple dual-port, all supported widths (×16/×32)	700	660	570	490	490	MHz
	Simple dual-port with the read-during-write option set to **Old Data**, all supported widths	460	450	400	330	330	MHz
	ROM, all supported width (×16/×32)	700	660	570	490	490	MHz
M20K Block	Single-port, all supported widths	730	690	625	530	510	MHz
	Simple dual-port, all supported widths	730	690	625	530	510	MHz
	Simple dual-port with the read-during-write option set to **Old Data**, all supported widths	550	520	470	410	410	MHz
	Simple dual-port with ECC enabled, 512 × 32	470	450	410	360	360	MHz
	Simple dual-port with ECC and optional pipeline registers enabled, 512 × 32	620	590	520	470	470	MHz
	True dual port, all supported widths	730	690	600	480	480	MHz
	ROM, all supported widths	730	690	625	530	510	MHz

Table 43. Memory Block Performance Specifications for Intel Arria 10 Devices (V_{CC} and V_{CCP} at 0.95 V Typical Value)

Memory	Mode	Performance		
		–I1S, –I1H	–I2L, –I2S	Unit
MLAB	Single port, all supported widths (×16/×32)	706	610	MHz
	Simple dual-port, all supported widths (×16/×32)	706	610	MHz
	Simple dual-port with read and write at the same address	482	428	MHz
	ROM, all supported width (×16/×32)	706	610	MHz
M20K Block	Single-port, all supported widths	735	670	MHz

continued...

Memory	Mode	Performance		
		–I1S, –I1H	–I2L, –I2S	Unit
	Simple dual-port, all supported widths	735	670	MHz
	Simple dual-port with the read-during-write option set to **Old Data**, all supported widths	555	500	MHz
	Simple dual-port with ECC enabled, 512 × 32	480	440	MHz
	Simple dual-port with ECC and optional pipeline registers enabled, 512 × 32	630	555	MHz
	True dual port, all supported widths	735	640	MHz
	ROM, all supported widths	735	670	MHz

Temperature Sensing Diode Specifications

Internal Temperature Sensing Diode Specifications

Table 44. Internal Temperature Sensing Diode Specifications for Intel Arria 10 Devices

Temperature Range	Accuracy	Offset Calibrated Option	Sampling Rate	Conversion Time	Resolution
–40 to 125°C	±5°C	No	1 MHz	< 5 ms	10 bits

Related Information

Transfer Function for Internal TSD
Provides the transfer function for the internal TSD.

External Temperature Sensing Diode Specifications

Table 45. External Temperature Sensing Diode Specifications for Intel Arria 10 Devices

- The typical value is at 25°C.
- Diode accuracy improves with lower injection current.
- Absolute accuracy is dependent on third party external diode ADC and integration specifics.

Description	Min	Typ	Max	Unit
I_{bias}, diode source current	10	—	100	µA
V_{bias}, voltage across diode	0.3	—	0.9	V
Series resistance	—	—	< 1	Ω
Diode ideality factor	—	1.03	—	—

Internal Voltage Sensor Specifications

Table 46. Internal Voltage Sensor Specifications for Intel Arria 10 Devices

Parameter		Minimum	Typical	Maximum	Unit
Resolution		—	—	6	Bit
Sampling rate		—	—	500	Ksps
Differential non-linearity (DNL)		—	—	±1	LSB
Integral non-linearity (INL)		—	—	±1	LSB
Gain error		—	—	±1	%
Offset error		—	—	±1	LSB
Input capacitance		—	20	—	pF
Clock frequency		0.1	—	11	MHz
Unipolar Input Mode	Input signal range for Vsigp	0	—	1.5	V
	Common mode voltage on Vsign	0	—	0.25	V
	Input signal range for Vsigp – Vsign	0	—	1.25	V

Periphery Performance Specifications

This section describes the periphery performance, high-speed I/O, and external memory interface.

Actual achievable frequency depends on design and system specific factors. Ensure proper timing closure in your design and perform HSPICE/IBIS simulations based on your specific design and system setup to determine the maximum achievable frequency in your system.

High-Speed I/O Specifications

Table 47. High-Speed I/O Specifications for Intel Arria 10 Devices

When serializer/deserializer (SERDES) factor J = 3 to 10, use the SERDES block.

For LVDS applications, you must use the PLLs in integer PLL mode.

You must calculate the leftover timing margin in the receiver by performing link timing closure analysis. You must consider the board skew margin, transmitter channel-to-channel skew, and receiver sampling margin to determine the leftover timing margin.

The Intel Arria 10 devices support the following output standards using true LVDS output buffer types on all I/O banks:

- True RSDS output standard with data rates of up to 360 Mbps
- True mini-LVDS output standard with data rates of up to 400 Mbps

Symbol	Condition	–E1S(72), –E1H, –I1S(72), –I1H			–E2L, –E2S(72), –I2L, –I2S(72)			–E3L, –E3S(72), –E3V, –I3L, –I3S(72), –I3V			Unit
		Min	Typ	Max	Min	Typ	Max	Min	Typ	Max	
f_{HSCLK_in} (input clock frequency) True Differential I/O Standards	Clock boost factor W = 1 to 40 (73)	10	—	800	10	—	700	10	—	625	MHz
f_{HSCLK_in} (input clock frequency) Single Ended I/O Standards	Clock boost factor W = 1 to 40 (73)	10	—	625	10	—	625	10	—	525	MHz
f_{HSCLK_OUT} (output clock frequency)	—	—	—	800 (74)	—	—	700 (74)	—	—	625 (74)	MHz

continued...

(72) –E1S and –E2S speed grades are applicable to both V_{CC} = 0.9 V and 0.95 V. –E3S speed grade is only applicable to V_{CC} = 0.9 V.

(73) Clock Boost Factor (W) is the ratio between the input data rate and the input clock rate.

(74) This is achieved by using the PHY clock network.

Symbol		Condition	–E1S[72], –E1H, –I1S[72], –I1H			–E2L, –E2S[72], –I2L, –I2S[72]			–E3L, –E3S[72], –E3V, –I3L, –I3S[72], –I3V			Unit
			Min	Typ	Max	Min	Typ	Max	Min	Typ	Max	
Transmitter	True Differential I/O Standards - f_{HSDR} (data rate) [75]	SERDES factor J = 4 to 10 [76][77][78]	[78]	—	1600	[78]	—	1434	[78]	—	1250	Mbps
		SERDES factor J = 3 [76][77][78]	[78]	—	1200	[78]	—	1076	[78]	—	938	Mbps
		SERDES factor J = 2, uses DDR registers	[78]	—	333 [79]	[78]	—	275 [79]	[78]	—	250 [79]	Mbps
		SERDES factor J = 1, uses DDR registers	[78]	—	333 [79]	[78]	—	275 [79]	[78]	—	250 [79]	Mbps
	$t_{x\ Jitter}$ - True Differential I/O Standards	Total jitter for data rate, 600 Mbps – 1.6 Gbps	—	—	160	—	—	200	—	—	250	ps
		Total jitter for data rate, < 600 Mbps	—	—	0.1	—	—	0.12	—	—	0.15	UI

continued...

(72) –E1S and –E2S speed grades are applicable to both V_{CC} = 0.9 V and 0.95 V. –E3S speed grade is only applicable to V_{CC} = 0.9 V.

(75) Requires package skew compensation with PCB trace length.

(76) The F_{max} specification is based on the fast clock used for serial data. The interface F_{max} is also dependent on the parallel clock domain which is design dependent and requires timing analysis.

(77) The V_{CC} and V_{CCP} must be on a combined power layer and a maximum load of 5 pF for chip-to-chip interface.

(78) The minimum specification depends on the clock source (for example, the PLL and clock pin) and the clock routing resource (global, regional, or local) that you use. The I/O differential buffer and serializer do not have a minimum toggle rate.

(79) The maximum ideal data rate is the SERDES factor (J) x the PLL maximum output frequency (f_{OUT}) provided you can close the design timing and the signal integrity meets the interface requirements.

Symbol		Condition	–E1S(72), –E1H, –I1S(72), –I1H			–E2L, –E2S(72), –I2L, –I2S(72)			–E3L, –E3S(72), –E3V, –I3L, –I3S(72), –I3V			Unit
			Min	Typ	Max	Min	Typ	Max	Min	Typ	Max	
	t_{DUTY} (80)	TX output clock duty cycle for Differential I/O Standards	45	50	55	45	50	55	45	50	55	%
	$t_{RISE\ \&}$ & t_{FALL} (77)(81)	True Differential I/O Standards	—	—	160	—	—	180	—	—	200	ps
	TCCS (80)(75)	True Differential I/O Standards	—	—	150	—	—	150	—	—	150	ps
Receiver	True Differential I/O Standards - $f_{HSDRDPA}$ (data rate)	SERDES factor J = 4 to 10 (76)(77)(78)	150	—	1600	150	—	1434	150	—	1250	Mbps
		SERDES factor J = 3 (76)(77)(78)	150	—	1200	150	—	1076	150	—	938	Mbps
	f_{HSDR} (data rate) (without DPA) (75)	SERDES factor J = 3 to 10	(78)	—	(82)	(78)	—	(82)	(78)	—	(82)	Mbps
		SERDES factor J = 2, uses DDR registers	(78)	—	(79)	(78)	—	(79)	(78)	—	(79)	Mbps
		SERDES factor J = 1, uses DDR registers	(78)	—	(79)	(78)	—	(79)	(78)	—	(79)	Mbps
DPA (FIFO mode)	DPA run length	—	—	—	10000	—	—	10000	—	—	10000	UI
DPA (soft CDR mode)	DPA run length	SGMII/GbE protocol	—	—	5	—	—	5	—	—	5	UI

continued...

(72) –E1S and –E2S speed grades are applicable to both V_{CC} = 0.9 V and 0.95 V. –E3S speed grade is only applicable to V_{CC} = 0.9 V.

(80) Not applicable for `DIVCLK` = 1.

(81) This applies to default pre-emphasis and V_{OD} settings only.

(82) You can estimate the achievable maximum data rate for non-DPA mode by performing link timing closure analysis. You must consider the board skew margin, transmitter delay margin, and receiver sampling margin to determine the maximum data rate supported.

Symbol		Condition	–E1S(72), –E1H, –I1S(72), –I1H			–E2L, –E2S(72), –I2L, –I2S(72)			–E3L, –E3S(72), –E3V, –I3L, –I3S(72), –I3V			Unit
			Min	Typ	Max	Min	Typ	Max	Min	Typ	Max	
		All other protocols	—	—	50 data transition per 208 UI	—	—	50 data transition per 208 UI	—	—	50 data transition per 208 UI	—
Soft CDR mode	Soft-CDR ppm tolerance	—	—	—	300	—	—	300	—	—	300	± ppm
Non DPA mode	Sampling Window	—	—	—	300	—	—	300	—	—	300	ps

DPA Lock Time Specifications

Table 48. DPA Lock Time Specifications for Intel Arria 10 Devices

The specifications are applicable to both extended and industrial grades. The DPA lock time is for one channel. One data transition is defined as a 0-to-1 or 1-to-0 transition.

Standard	Training Pattern	Number of Data Transitions in One Repetition of the Training Pattern	Number of Repetitions per 256 Data Transitions (83)	Maximum Data Transition (84)
SPI-4	00000000001111111111	2	128	640
Parallel Rapid I/O	00001111	2	128	640
	10010000	4	64	640
Miscellaneous	10101010	8	32	640
	01010101	8	32	640

(72) –E1S and –E2S speed grades are applicable to both V_{CC} = 0.9 V and 0.95 V. –E3S speed grade is only applicable to V_{CC} = 0.9 V.

(83) This is the number of repetitions for the stated training pattern to achieve the 256 data transitions.

(84) This is the maximum data transition consumed by DPA to lock.

LVDS Soft-CDR/DPA Sinusoidal Jitter Tolerance Specifications

Figure 2. LVDS Soft-CDR/DPA Sinusoidal Jitter Tolerance Specifications for a Data Rate Equal to 1.6 Gbps

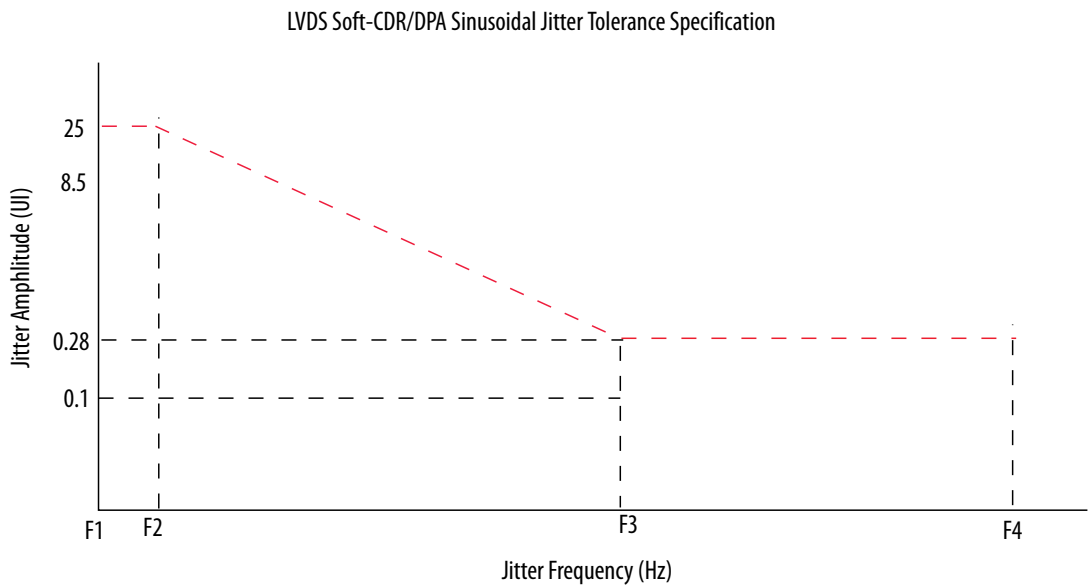

Table 49. LVDS Soft-CDR/DPA Sinusoidal Jitter Mask Values for a Data Rate Equal to 1.6 Gbps

Jitter Frequency (Hz)		Sinusoidal Jitter (UI)
F1	10,000	25.00
F2	17,565	25.00
F3	1,493,000	0.28
F4	50,000,000	0.28

Figure 3. LVDS Soft-CDR/DPA Sinusoidal Jitter Tolerance Specifications for a Data Rate Less than 1.6 Gbps

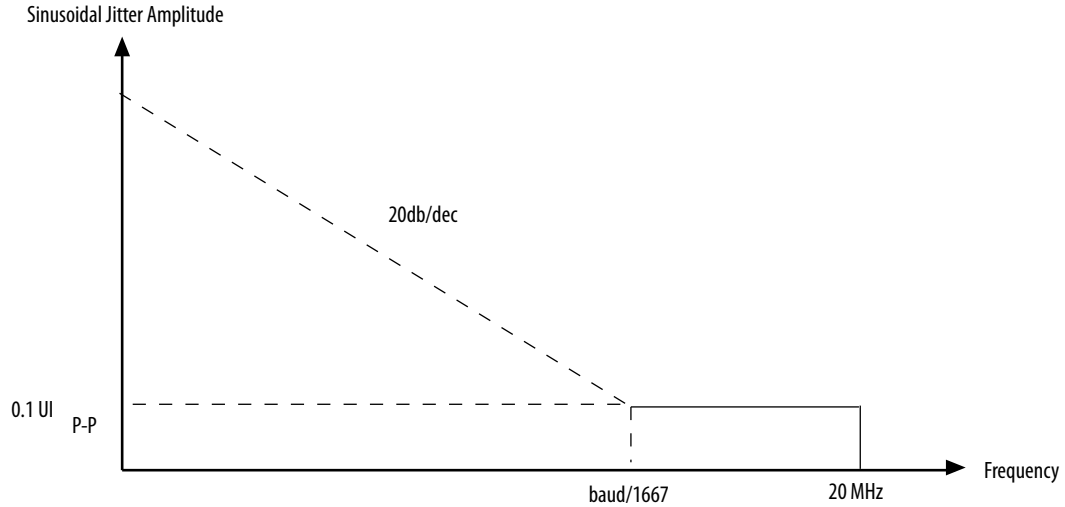

Memory Standards Supported by the Hard Memory Controller

Table 50. Memory Standards Supported by the Hard Memory Controller for Intel Arria 10 Devices

This table lists the overall capability of the hard memory controller. For specific details, refer to the External Memory Interface Spec Estimator.

Memory Standard	Rate Support	Ping Pong PHY Support	Maximum Frequency (MHz)
DDR4 SDRAM	Quarter rate	Yes	1,200
DDR3 SDRAM	Quarter rate	Yes	1,066
DDR3L SDRAM	Quarter rate	Yes	933
LPDDR3 SDRAM	Quarter rate	—	800

Related Information

External Memory Interface Spec Estimator
Provides the specific details of the memory standards supported.

Memory Standards Supported by the Soft Memory Controller

Table 51. Memory Standards Supported by the Soft Memory Controller for Intel Arria 10 Devices

This table lists the overall capability of the soft memory controller. For specific details, refer to the External Memory Interface Spec Estimator.

Memory Standard	Rate Support	Maximum Frequency (MHz)
RLDRAM 3[85]	Quarter rate	1,200
QDR IV SRAM[85]	Quarter rate	1,066
QDR II SRAM	Half rate	633
QDR II+ SRAM	Half rate	633
QDR II+ Xtreme SRAM	Half rate	633

Related Information

External Memory Interface Spec Estimator
Provides the specific details of the memory standards supported.

Memory Standards Supported by the HPS Hard Memory Controller

Table 52. Memory Standards Supported by the HPS Hard Memory Controller for Intel Arria 10 Devices

This table lists the overall capability of the hard memory controller. For specific details, refer to the External Memory Interface Spec Estimator.

Memory Standard	Rate Support	Maximum Frequency (MHz)
DDR4 SDRAM	Half rate	1,200
DDR3 SDRAM	Half rate	1,066
DDR3L SDRAM	Half rate	933

Related Information

External Memory Interface Spec Estimator
Provides the specific details of the memory standards supported.

(85) Intel Arria 10 devices support this external memory interface using hard PHY with soft memory controller.

DLL Range Specifications

Table 53. DLL Frequency Range Specifications for Intel Arria 10 Devices

Intel Arria 10 devices support memory interface frequencies lower than 600 MHz, although the reference clock that feeds the DLL must be at least 600 MHz. To support interfaces below 600 MHz, multiply the reference clock feeding the DLL to ensure the frequency is within the supported range.

Parameter	Performance (for All Speed Grades)	Unit
DLL operating frequency range	600 – 1333	MHz

DQS Logic Block Specifications

Table 54. DQS Phase Shift Error Specifications for DLL-Delayed Clock (t_{DQS_PSERR}) for Intel Arria 10 Devices

This error specification is the absolute maximum and minimum error.

Symbol	Performance (for All Speed Grades)	Unit
t_{DQS_PSERR}	5	ps

Memory Output Clock Jitter Specifications

Table 55. Memory Output Clock Jitter Specifications for Intel Arria 10 Devices

The clock jitter specification applies to the memory output clock pins clocked by an I/O PLL, or generated using differential signal-splitter and double data I/O circuits clocked by a PLL output routed on a PHY clock network as specified. Intel recommends using PHY clock networks for better jitter performance.

The memory output clock jitter is applicable when an input jitter of 10 ps peak-to-peak is applied with bit error rate (BER) 10^{-12}, equivalent to 14 sigma.

Protocol	Parameter	Symbol	Non-SmartVID			SmartVID (–3V Speed Grade)			Unit
			Data Rate (Mbps)	Min	Max	Data Rate (Mbps)	Min	Max	
DDR3	Clock period jitter	$t_{JIT(per)}$	2,133	–40	40	1,600	–70	70	ps
	Cycle-to-cycle period jitter	$t_{JIT(cc)}$	2,133	–40	40	1,600	–70	70	ps
	Duty cycle jitter	$t_{JIT(duty)}$	2,133	–40	40	1,600	–100	100	ps
DDR4	Clock period jitter	$t_{JIT(per)}$	2,400	–40	40	1,600	–63	63	ps
	Cycle-to-cycle period jitter	$t_{JIT(cc)}$	2,400	–40	40	1,600	–63	63	ps
	Duty cycle jitter	$t_{JIT(duty)}$	2,400	–40	40	1,600	–100	100	ps

OCT Calibration Block Specifications

Table 56. OCT Calibration Block Specifications for Intel Arria 10 Devices

Symbol	Description	Min	Typ	Max	Unit
OCTUSRCLK	Clock required by OCT calibration blocks	—	—	20	MHz
T_{OCTCAL}	Number of OCTUSRCLK clock cycles required for R_S OCT /R_T OCT calibration	> 2000	—	—	Cycles
$T_{OCTSHIFT}$	Number of OCTUSRCLK clock cycles required for OCT code to shift out	—	32	—	Cycles
T_{RS_RT}	Time required between the `dyn_term_ctrl` and `oe` signal transitions in a bidirectional I/O buffer to dynamically switch between R_S OCT and R_T OCT	—	2.5	—	ns

Figure 4. Timing Diagram for on oe and dyn_term_ctrl Signals

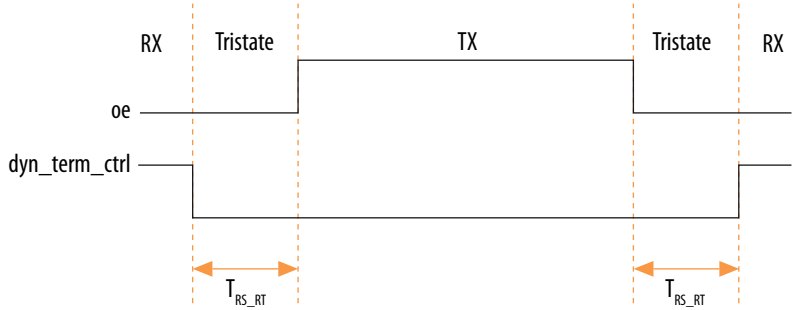

HPS Specifications

This section provides HPS specifications and timing for Intel Arria 10 devices.

If you are using the early I/O release configuration flow, you cannot initially use SmartVID to power your device. Instead, you can use a fixed power supply until after the FPGA is configured. When the FPGA is configured, you can then enable SmartVID.

HPS Reset Input Requirements

Table 57. HPS Reset Input Requirements for Intel Arria 10 Devices

Description	Min	Max	Unit
HPS cold reset pulse width	600	—	ns
HPS warm reset pulse width	600	—	ns
Cold reset deassertion to BSEL sampling, using `osc1_clk` [86]	—	1000	`osc1_clk` cycles
Cold reset deassertion to BSEL sampling, using secure clock, without RAM clearing	—	100	µs
Cold reset deassertion to BSEL sampling, using secure clock, with RAM clearing	—	50	ms

[86] `osc1_clk` is supplied from the `HPS_CLK1` pin.

HPS Clock Performance

Table 58. Maximum HPS Clock Frequencies Across Device Speed Grades for Intel Arria 10 Devices

HPS Clock	Temperature Grade	V_{CCL_HPS} = 0.9 V (typical)			V_{CCL_HPS} = 0.95 V (typical) [87]			Unit
		–1 Speed Grade	–2 Speed Grade	–3 Speed Grade	–1 Speed Grade	–2 Speed Grade	–3 Speed Grade	
mpu_base_clk	All	1,200	1,000	800	1,500	1,200	1,000	MHz
noc_base_clk	All	400	400	300	500	400	300	MHz
hmc_free_clk [88]	All	600	533	467	600	533	467	MHz

Related Information

- Clock Select, Intel Arria 10 Hard Processor System Technical Reference Manual
  Provides information on the Clock Select (CSEL) values that require higher voltage operation.
- SoC Security chapter, Intel Arria 10 Hard Processor System Technical Reference Manual
  Provides information about programming fuses.
- External Memory Interface Spec Estimator
  Provides the specific details of the maximum allowed SDRAM operating frequency, which is twice the frequency of `hmc_free_clk`.

HPS PLL Specifications

HPS PLL Input Requirements

The HPS main PLL receives the clock signal from the `HPS_CLK1` pin. For details on this pin, refer to the *Intel Arria 10 GX, GT, and SX Device Family Pin Connection Guidelines*.

---

(87) You must use 0.95 V V_{CCL_HPS} for CSEL values of 0x7 – 0xE.

(88) The hmc_free_clk is 1/2 of the SDRAM interface clock. For the external memory interface clock specifications, refer to the External Memory Interface Spec Estimator.

Table 59. HPS PLL Input Requirements for Intel Arria 10 Devices

Description	Min	Typ	Max	Unit
Clock input range	10	—	50	MHz
Clock input jitter tolerance	—	—	2	%
Clock input duty cycle	45	50	55	%

Related Information

Intel Arria 10 GX, GT, and SX Device Family Pin Connection Guidelines
Provides more information about the `HPS_CLK1` pin.

HPS PLL Performance

Table 60. HPS PLL Performance for Intel Arria 10 Devices

Description	V_{CCL_HPS}	–1 Speed Grade		–2 Speed Grade		–3 Speed Grade		Unit
		Min	Max	Min	Max	Min	Max	
HPS PLL VCO output	0.95 V	320	3,000	320	2,400	320	2,000	MHz
	0.90 V	320	2,400	320	2,000	320	1,600	MHz
h2f_user0_clk	—	—	400	—	400	—	400	MHz
h2f_user1_clk	—	—	400	—	400	—	400	MHz

HPS PLL Output Specifications

Table 61. HPS PLL Output Specifications for Intel Arria 10 Devices

Description	Min	Max	Max	Unit
Clock jitter tolerance	–2.5	—	2.5	%
Clock duty cycle	45	50	55	%
Clock rise time	350	—	1075	ps
Clock fall time	200	—	450	ps
HPS PLL lock time	—	—	3.6	ms

Quad SPI Flash Timing Characteristics

Table 62. Quad Serial Peripheral Interface (SPI) Flash Timing Requirements for Intel Arria 10 Devices

Note that the Intel Arria 10 HPS boot loader calibrates the input timing automatically.

Symbol	Description	Min	Typ	Max	Unit
$T_{qspi_ref_clk}$	QSPI_REF_CLK clock period	2.5	—	—	ns
T_{clk}	QSPI_CLK clock period	9.25	—	—	ns
$T_{dutycycle}$	QSPI_CLK duty cycle	45	50	55	%
$T_{dssfrst}$ (89)	QSPI_SS asserted to first QSPI_CLK edge	3.6	—	5.25	ns
T_{dsslst} (89)	Last QSPI_CLK edge to QSPI_SS deasserted	–1	—	1	ns
T_{do}	QSPI_DATA output delay	0	—	2.6	ns
T_{su}	Input setup with respect to QSPI_CLK capture edge	$6.5 - (R_{delay} \times T_{qspi_ref_clk})$ (90)	—	—	ns
T_h	Input hold with respect to QSPI_CLK capture edge	$(R_{delay} + 1) \times T_{qspi_ref_clk}$ (90)	—	—	ns
T_{dssb2b} (89)	Minimum delay of slave select deassertion between two back-to-back transfer	1	—	—	QSPI_CLK

Figure 5. Quad SPI Flash Serial Output Timing Diagram

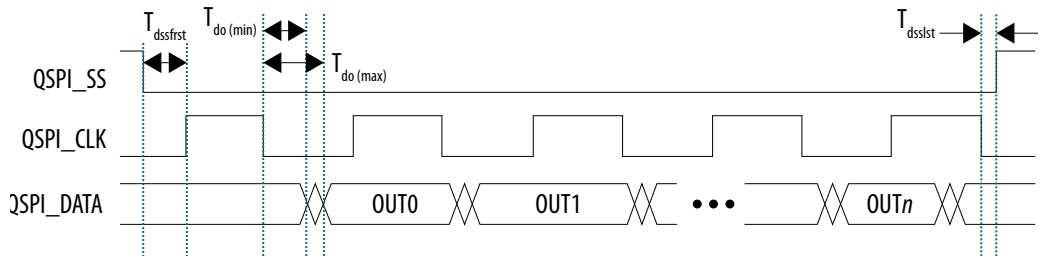

(89) This delay is programmable in whole QSPI_REF_CLK increments using the `delay` register in the Quad SPI module.

(90) R_{delay} is programmable in whole QSPI_REF_CLK increments using the delay field in the `rddatacap` register in the Quad SPI module.

Figure 6. Quad SPI Flash Serial Input Timing Diagram

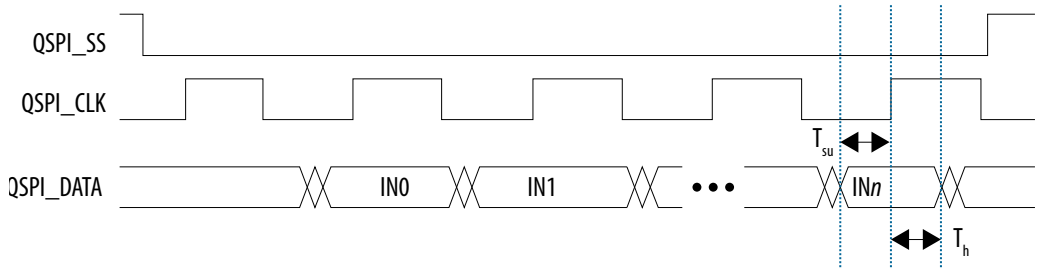

SPI Timing Characteristics

Table 63. SPI Master Timing Requirements for Intel Arria 10 Devices

You can adjust the input delay timing by programming the `rx_sample_dly` register.

Symbol	Description	Min	Typ	Max	Unit
T_{clk}	SPI_CLK clock period	16.67	—	—	ns
$T_{dutycycle}$	SPI_CLK duty cycle	45	50	55	%
$T_{dssfrst}$ (91)	SPI_SS asserted to first SPI_CLK edge	$1.5 \times T_{SPI_CLK} - 2$	—	—	ns
T_{dsslst} (91)	Last SPI_CLK edge to SPI_SS deasserted	$T_{SPI_CLK} - 2$	—	—	ns
T_{dio}	Master-out slave-in (MOSI) output delay	–1	—	1	ns

continued...

(91) SPI_SS behavior differs depending on Motorola SPI, TI SSP or Microwire operational mode.

Symbol	Description	Min	Typ	Max	Unit
T_{su} (92)	Input setup in respect to SPI_CLK capture edge	16 – (rx_sample_dly × $T_{spi_ref_clk}$) (93) (94)	—	—	ns
T_h (92)	Input hold in respect to SPI_CLK capture edge	0	—	—	ns
T_{dssb2b}	Minimum delay of slave select deassertion between two back-to-back transfers (frames)	1	—	—	SPI_CLK

(92) The capture edge differs depending on the operational mode. For Motorola SPI, the capture edge can be the rising or falling edge depending on the `scpol` register bit; for TI SSP, the capture edge is the falling edge; for Microwire, the capture edge is the rising edge.

(93) A `rx_sample_dly` value of 0 is an invalid setting.

(94) `SPI_REF_CLK` is the internal reference clock of the SPI Slave, which is `l4_main_clk`.

Figure 7. SPI Master Output Timing Diagram

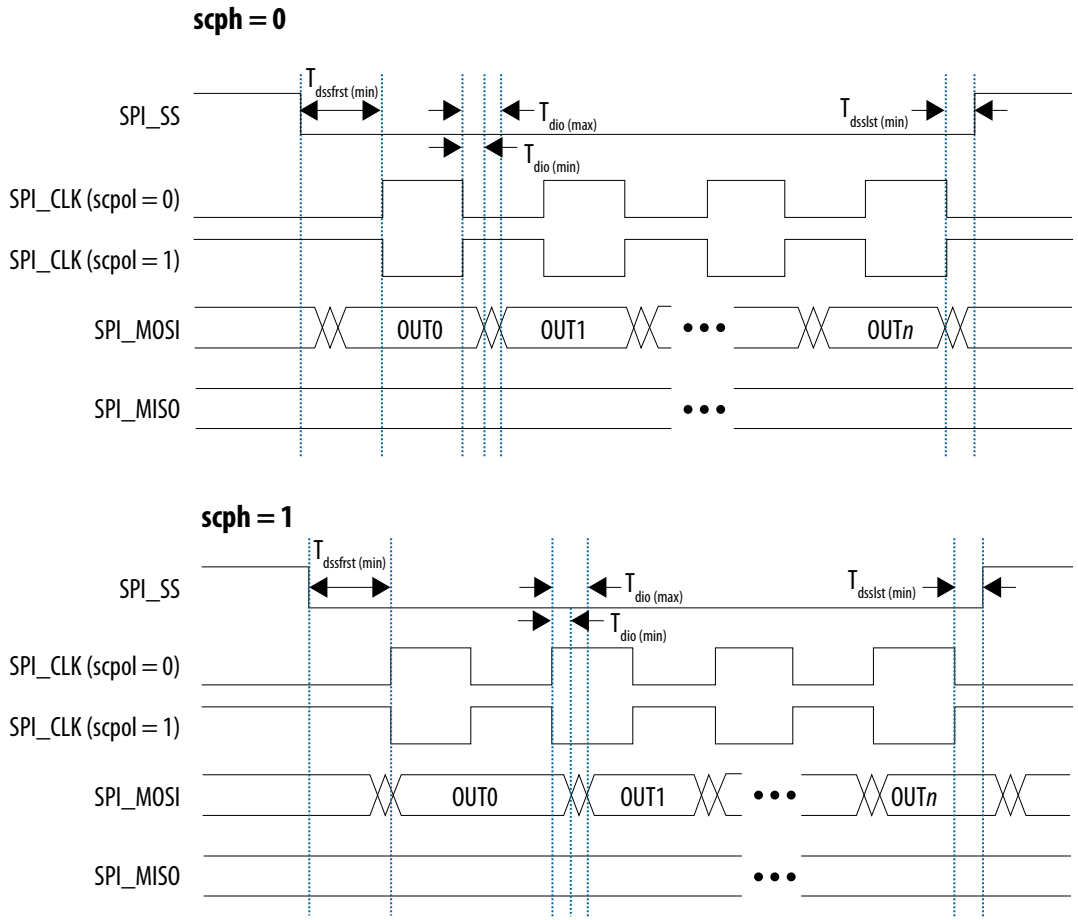

Figure 8. SPI Master Input Timing Diagram

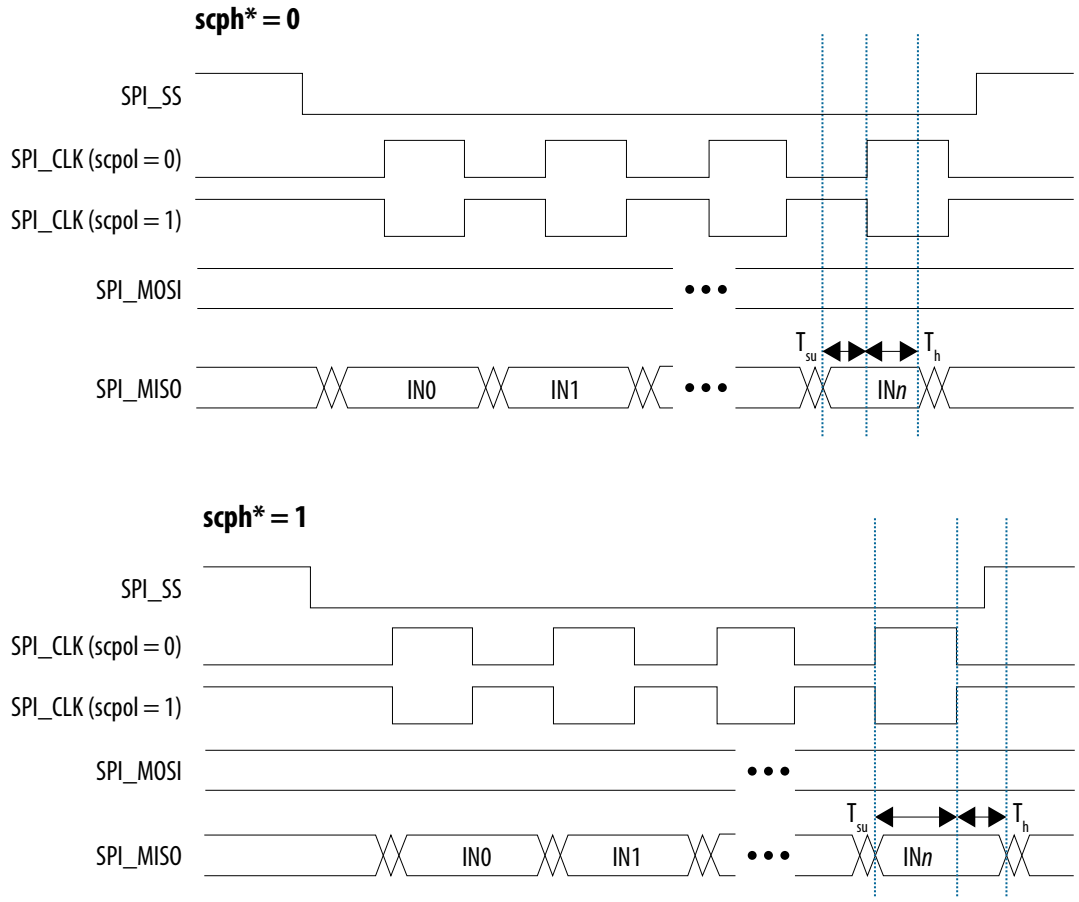

*Serial clock phase configuration bit, in the SPI controller's CTRLR0 register

Table 64. SPI Slave Timing Requirements for Intel Arria 10 Devices

Symbol	Description	Min	Typ	Max	Unit
T_{clk}	SPI_CLK clock period	20	—	—	ns
$T_{dutycycle}$	SPI_CLK duty cycle	45	50	55	%
T_s	SPI slave input setup time	5	—	—	ns
T_h	SPI slave input hold time	8	—	—	ns
T_{suss}	SPI_SS asserted to first SCLK_IN edge	5	—	—	ns
T_{hss}	Last SCLK_IN edge to SPI_SS deasserted	5	—	—	ns
T_d	Master-in slave-out (MISO) output delay	$2 \times T_{spi_ref_clk} + 5.3$ (95)	—	$3 \times T_{spi_ref_clk} + 11.8$ (95)	ns

(95) `SPI_REF_CLK` is the internal reference clock of the SPI Slave, which is `l4_main_clk`.

Figure 9. SPI Slave Output Timing Diagram

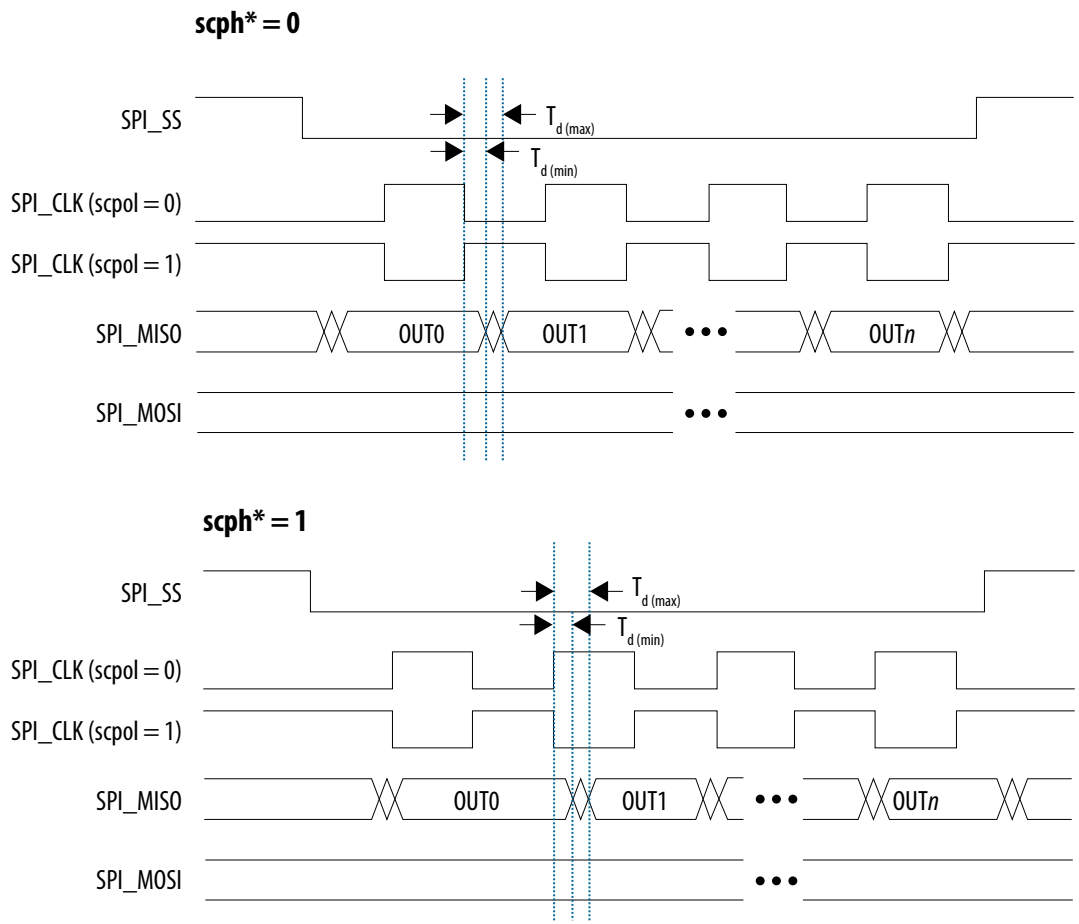

*Serial clock phase configuration bit, in the SPI controller's CTRLR0 register

Figure 10. SPI Slave Input Timing Diagram

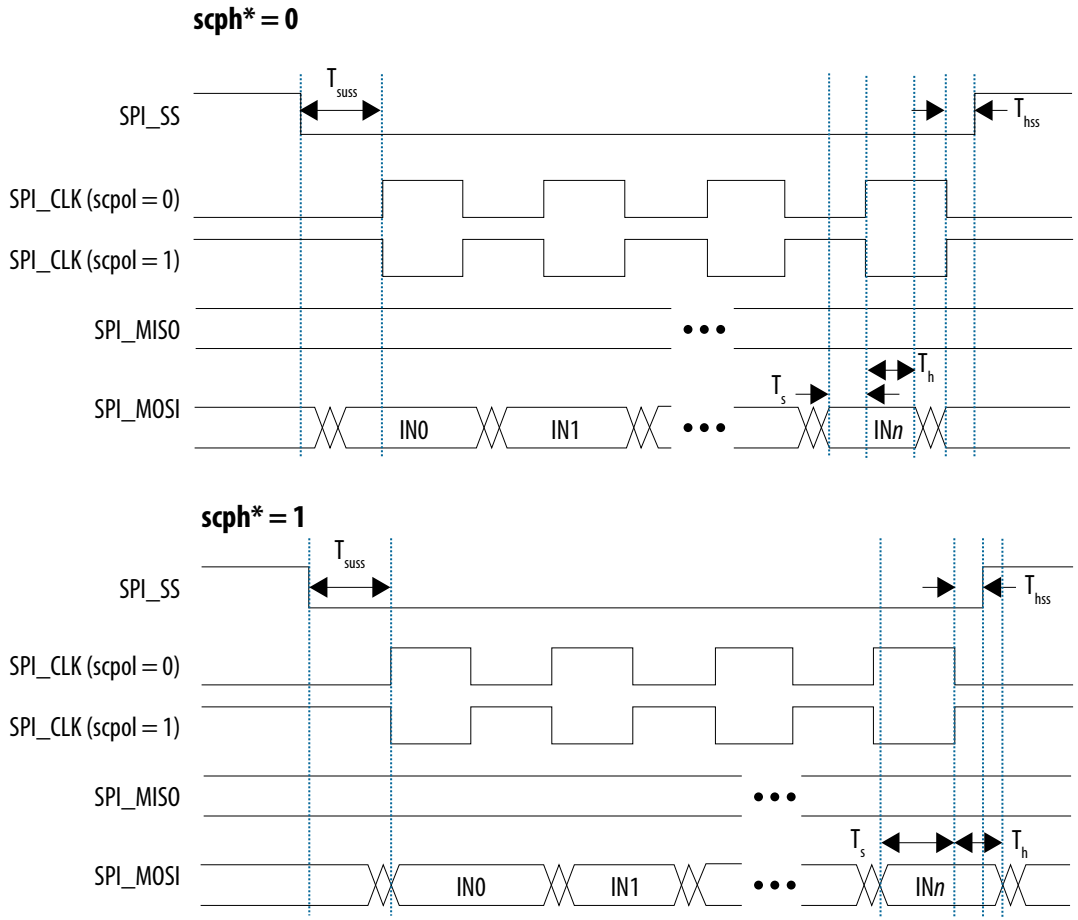

*Serial clock phase configuration bit, in the SPI controller's CTRLR0 register

SD/MMC Timing Characteristics

Table 65. Secure Digital (SD)/MultiMediaCard (MMC) Timing Requirements for Intel Arria 10 Devices

These timings apply to SD, MMC, and embedded MMC cards operating at 1.8 V and 3.0 V.

Symbol	Description	Min	Typ	Max	Unit
T_{sdmmc_cclk}	SDMMC_CCLK clock period (Identification mode)	—	2500	—	ns
	SDMMC_CCLK clock period (Standard SD mode)	—	40	—	ns
	SDMMC_CCLK clock period (High speed SD mode)	—	20	—	ns
$T_{dutycycle}$	SDMMC_CCLK duty cycle	45	50	55	%
T_{su}	SDMMC_CMD/SDMMC_D[7:0] input setup (96)	7 – (`l4_mp_clk` × `smplsel`/2)	—	—	ns
T_h	SDMMC_CMD/SDMMC_D[7:0] input hold (96)	–2.5 + (`l4_mp_clk` × `smplsel`/2)	—	—	ns
T_d	SDMMC_CMD/SDMMC_D[7:0] output delay (97)	–1 + (`l4_mp_clk` × `drvsel`/2) (98)	—	4 + (`l4_mp_clk` × `drvsel`/2) (98)	ns

(96) When `smplsel` is set to 2 (in the system manager) and the reference clock (`l4_mp_clk`) is 200 MHz for example, the setup time is 2 ns and the hold time is 2.5 ns. The Boot ROM uses a `smplsel` setting of 0 and U-Boot can adjust this setting later in the boot process.

(97) When `drvsel` is set to 3 (in the system manager) and the reference clock (`l4_mp_clk`) is 200 MHz for example, the output delay time is 6.5 to 11.5 ns. The Boot ROM uses a `drvsel` setting of 3 and the Intel Quartus Prime software can adjust this setting later in the boot process. `drvsel` set to 0 is not a valid setting.

(98) `l4_mp_clk` is the SD/MMC controller reference clock.

Figure 11. SD/MMC Timing Diagram

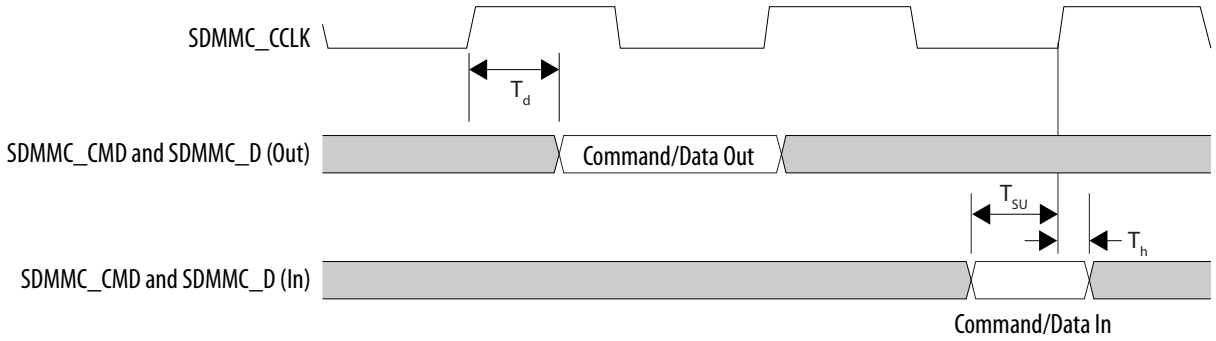

USB ULPI Timing Characteristics

Table 66. USB 2.0 Transceiver Macrocell Interface Plus (UTMI+) Low Pin Interface (ULPI) Timing Requirements for Intel Arria 10 Devices

Symbol	Description	Min	Typ	Max	Unit
T_{clk}	USB_CLK clock period	—	16.667	—	ns
T_d[99]	Clock to USB_STP/USB_DATA[7:0] output delay	1.5	—	8	ns
T_{su}	Setup time for USB_DIR/USB_NXT/USB_DATA[7:0]	2	—	—	ns
T_h	Hold time for USB_DIR/USB_NXT/USB_DATA[7:0]	1	—	—	ns

(99) For the maximum trace length, refer to the Intel Arria 10 SoC Device Design Guidelines.

Figure 12. USB ULPI Timing Diagram

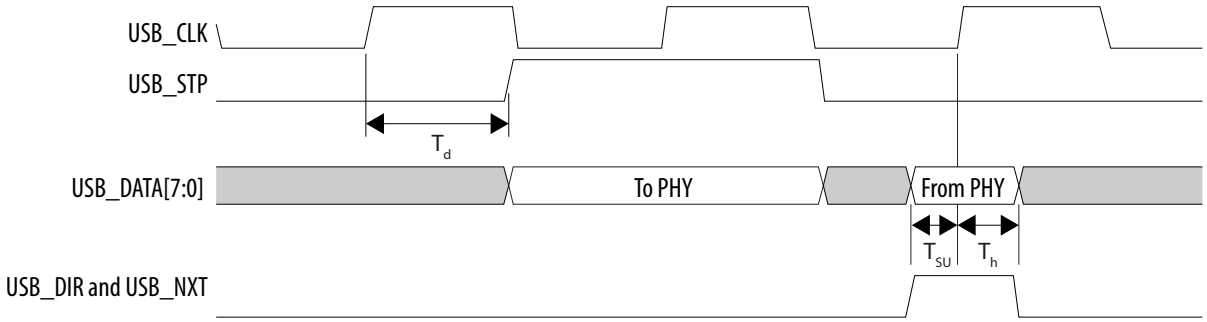

Related Information

USB Interface Design Guidelines, Intel Arria 10 SoC Device Design Guidelines

Ethernet Media Access Controller (EMAC) Timing Characteristics

Table 67. Reduced Gigabit Media Independent Interface (RGMII) TX Timing Requirements for Intel Arria 10 Devices

Symbol	Description	Min	Typ	Max	Unit
T_{clk} (1000Base-T)	TX_CLK clock period	—	8	—	ns
T_{clk} (100Base-T)	TX_CLK clock period	—	40	—	ns
T_{clk} (10Base-T)	TX_CLK clock period	—	400	—	ns
$T_{dutycycle}$	TX_CLK duty cycle	45	50	55	%
T_d (100)	TX_CLK to TXD/TX_CTL output data delay	–0.5	—	0.5	ns

(100) Rise and fall times depend on the I/O standard, drive strength, and loading. Intel recommends simulating your configuration.

Figure 13. RGMII TX Timing Diagram

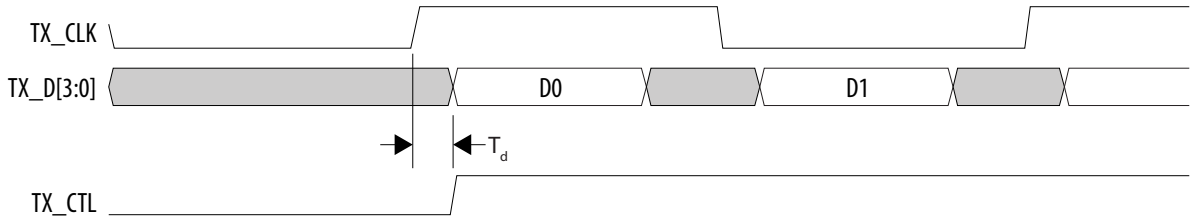

Table 68. RGMII RX Timing Requirements for Intel Arria 10 Devices

Symbol	Description	Min	Typ	Max	Unit
T_{clk} (1000Base-T)	RX_CLK clock period	—	8	—	ns
T_{clk} (100Base-T)	RX_CLK clock period	—	40	—	ns
T_{clk} (10Base-T)	RX_CLK clock period	—	400	—	ns
T_{su}	RX_D/RX_CTL setup time	1	—	—	ns
T_h (101)	RX_D/RX_CTL hold time	1	—	—	ns

Figure 14. RGMII RX Timing Diagram

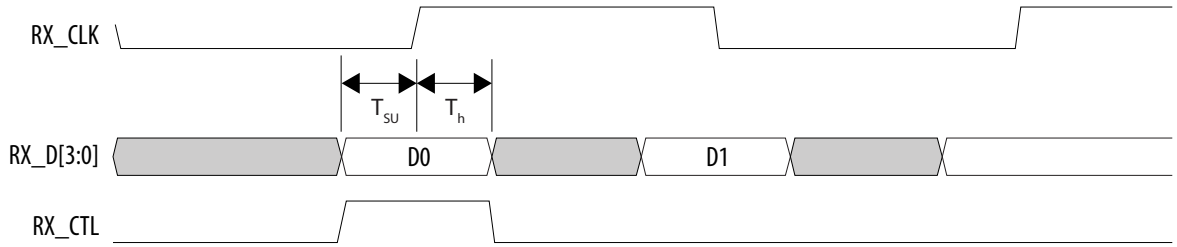

(101) For more information, refer to the Intel Arria 10 SoC Device Design Guidelines.

Table 69. Reduced Media Independent Interface (RMII) Clock Timing Requirements for Intel Arria 10 Devices

Symbol	Description	Min	Typ	Max	Unit
T_{clk} (100Base-T)	TX_CLK clock period	—	20	—	ns
T_{clk} (10Base-T)	TX_CLK clock period	—	20	—	ns
$T_{dutycycle}$	Clock duty cycle, internal clock source	35	50	65	%
$T_{dutycycle}$	Clock duty cycle, external clock source	35	50	65	%

Table 70. RMII TX Timing Requirements for Intel Arria 10 Devices

Symbol	Description	Min	Typ	Max	Unit
T_d	TX_CLK to TXD/TX_CTL output data delay	7	—	10	ns

Table 71. RMII RX Timing Requirements for Intel Arria 10 Devices

Symbol	Description	Min	Typ	Max	Unit
T_{su}	RX_D/RX_CTL setup time	1	—	—	ns
T_h	RX_D/RX_CTL hold time	0.4	—	—	ns

Table 72. Management Data Input/Output (MDIO) Timing Requirements for Intel Arria 10 Devices

Symbol	Description	Min	Typ	Max	Unit
T_{clk}	MDC clock period	—	400	—	ns
T_d	MDC to MDIO output data delay	10.2	—	20	ns
T_{su}	Setup time for MDIO data	10	—	—	ns
T_h	Hold time for MDIO data	0	—	—	ns

Figure 15. MDIO Timing Diagram

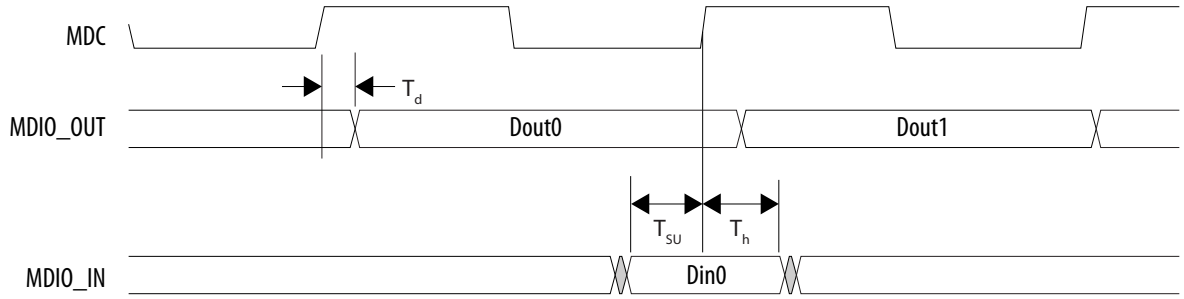

Related Information

I/O Pin Timing, Intel Arria 10 SoC Device Design Guidelines

I²C Timing Characteristics

Table 73. I²C Timing Requirements for Intel Arria 10 Devices

Symbol	Description	Standard Mode		Fast Mode		Unit
		Min	Max	Min	Max	
T_{clk}	Serial clock (SCL) clock period	10	—	2.5	—	µs
t_{HIGH} (102)	SCL high period	4 (103)	—	0.6 (104)	—	µs
t_{LOW} (105)	SCL low period	4.7 (106)	—	1.3 (107)	—	µs

continued...

(102) You can adjust $T_{clkhigh}$ using the `ic_ss_scl_hcnt` or `ic_fs_scl_hcnt` register.

(103) The recommended minimum setting for `ic_ss_scl_hcnt` is 440.

(104) The recommended minimum setting for `ic_fs_scl_hcnt` is 71.

(105) You can adjust T_{clklow} using the `ic_ss_scl_lcnt` or `ic_fs_scl_lcnt` register.

(106) The recommended minimum setting for `ic_ss_scl_lcnt` is 500.

Symbol	Description	Standard Mode		Fast Mode		Unit
		Min	Max	Min	Max	
$t_{SU;DAT}$	Setup time for serial data line (SDA) data to SCL	0.25	—	0.1	—	µs
$t_{HD;DAT}$ (108)	Hold time for SCL to SDA data	0	3.15	0	0.6	µs
$t_{VD;DAT}$ and $t_{VD;ACK}$ (109)	SCL to SDA output data delay	—	3.45 (110)	—	0.9 (111)	µs
$t_{SU;STA}$	Setup time for a repeated start condition	4.7	—	0.6	—	µs
$t_{HD;STA}$	Hold time for a repeated start condition	4	—	0.6	—	µs
$t_{SU;STO}$	Setup time for a stop condition	4	—	0.6	—	µs
t_{BUF}	SDA high pulse duration between STOP and START	4.7	—	1.3	—	µs
t_r (112)	SCL rise time	—	1000	20	300	ns
t_f (112)	SCL fall time	—	300	20 × (V_{dd} / 5.5) (113)	300	ns
t_r (112)	SDA rise time	—	1000	20	300	ns
t_f (112)	SDA fall time	—	300	20 × (V_{dd} / 5.5) (113)	300	ns

(107) The recommended minimum setting for `ic_fs_scl_lcnt` is 141.

(108) $T_{HD;DAT}$ is affected by the rise and fall time.

(109) $t_{VD;DAT}$ and $t_{VD;ACK}$ is affected by the rise and fall time, in addition to the SDA hold time that is set by adjusting the `ic_sda_hold` register.

(110) Use maximum `SDA_HOLD` = 240 to be within the specification.

(111) Use maximum `SDA_HOLD` = 60 to be within the specification.

(112) Rise and fall time parameters vary depending on the external factors such as: characteristics of IO driver, pull-out resistor value, and total capacitance on the transmission line.

(113) V_{dd} is the I^2C bus voltage.

Figure 16. I²C Timing Diagram

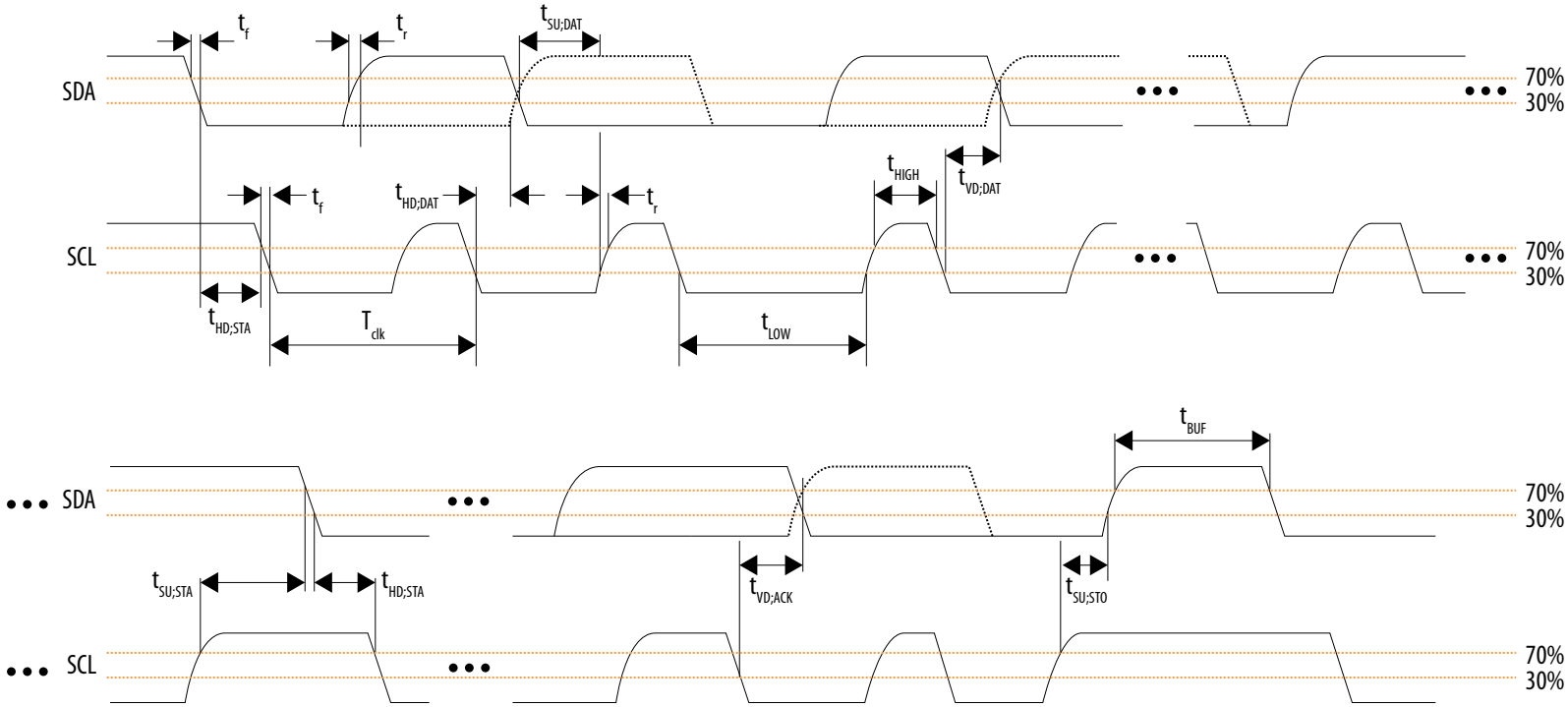

NAND Timing Characteristics

Table 74. NAND ONFI 1.0 Timing Requirements for Intel Arria 10 Devices

Symbol	Description	Min	Max	Unit
t_{WP}[114]	Write enable pulse width	10	—	ns
t_{WH}[114]	Write enable hold time	7	—	ns
t_{RP}[114]	Read enable pulse width	10	—	ns
t_{REH}[114]	Read enable hold time	7	—	ns
t_{CLS}[114]	Command latch enable to write enable setup time	10	—	ns
t_{CLH}[114]	Command latch enable to write enable hold time	5	—	ns
t_{CS}[114]	Chip enable to write enable setup time	15	—	ns
t_{CH}[114]	Chip enable to write enable hold time	5	—	ns
t_{ALS}[114]	Address latch enable to write enable setup time	10	—	ns
t_{ALH}[114]	Address latch enable to write enable hold time	5	—	ns
t_{DS}[114]	Data to write enable setup time	7	—	ns
t_{DH}[114]	Data to write enable hold time	5	—	ns
t_{CEA}	Chip enable to data access time	—	100	ns
t_{REA}	Read enable to data access time	—	40	ns
t_{RHZ}	Read enable to data high impedance	—	200	ns
t_{RR}	Ready to read enable low	20	—	ns
t_{WB}[114]	Write enable high to R/B low	—	200	ns

(114) This timing is software programmable.

Figure 17. NAND Command Latch Timing Diagram

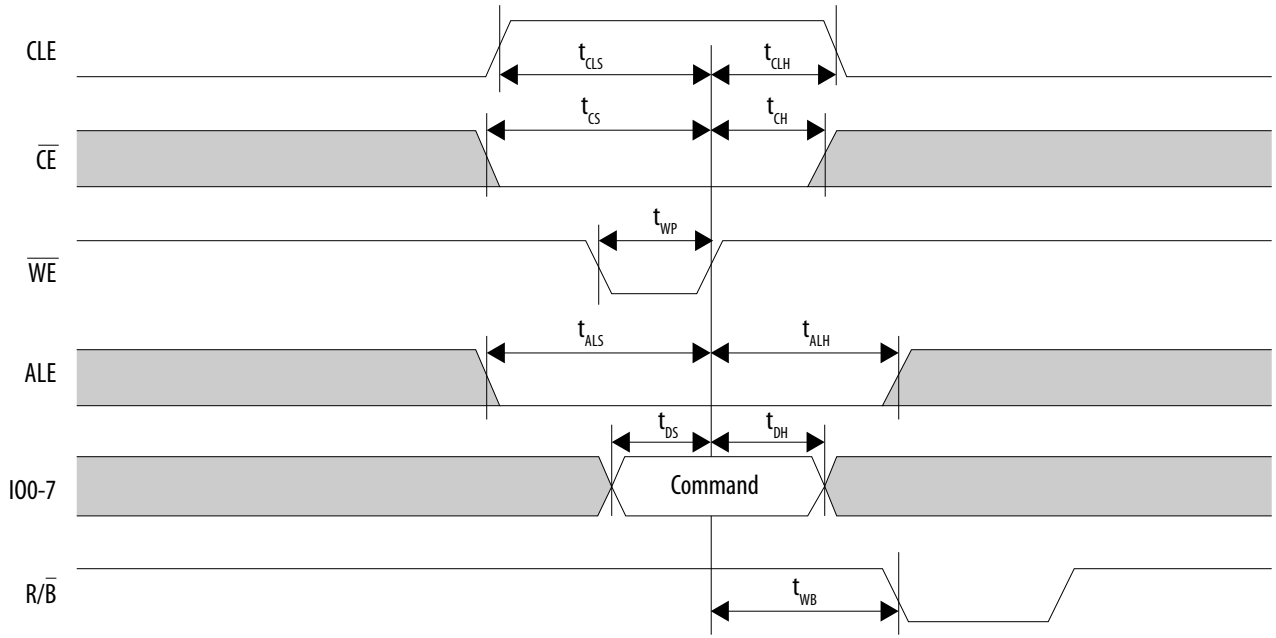

Figure 18. NAND Address Latch Timing Diagram

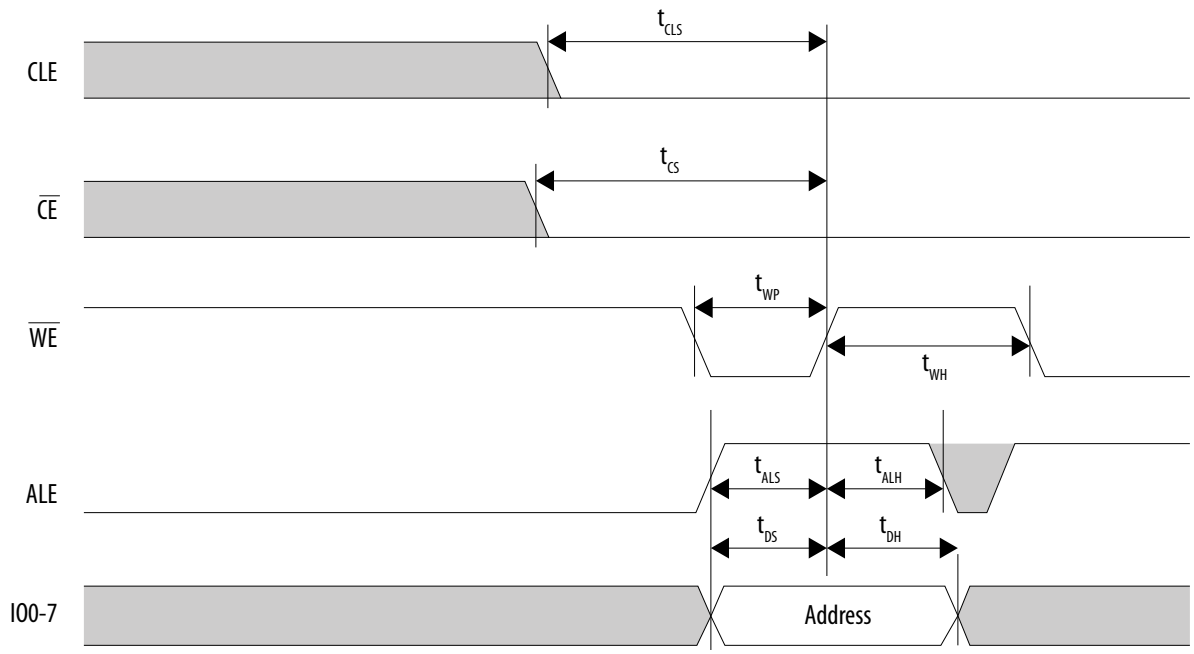

Figure 19. NAND Data Output Cycle Timing Diagram

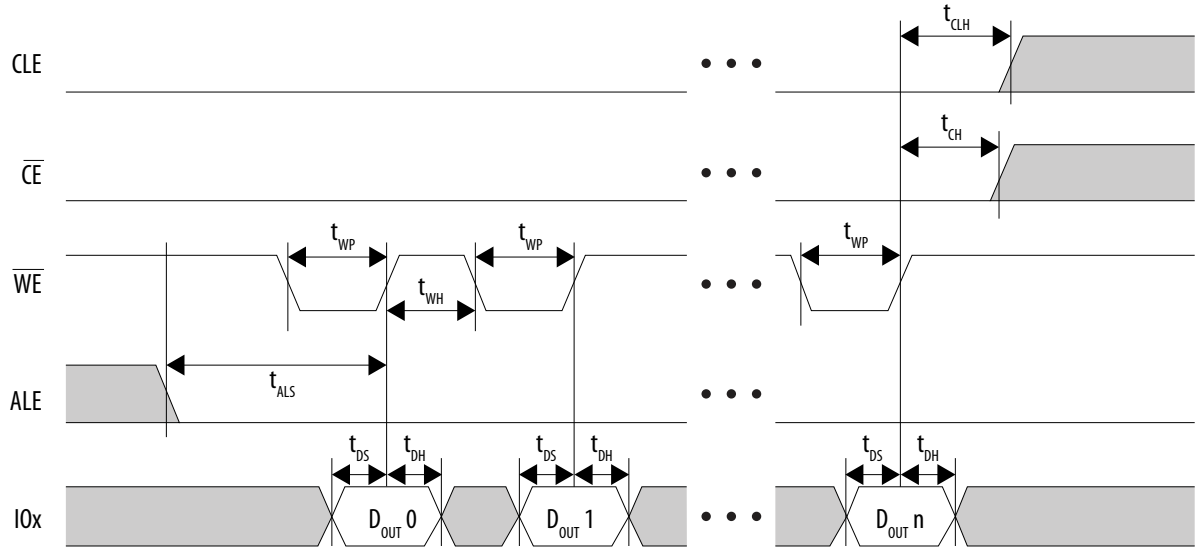

Figure 20. NAND Data Input Cycle Timing Diagram

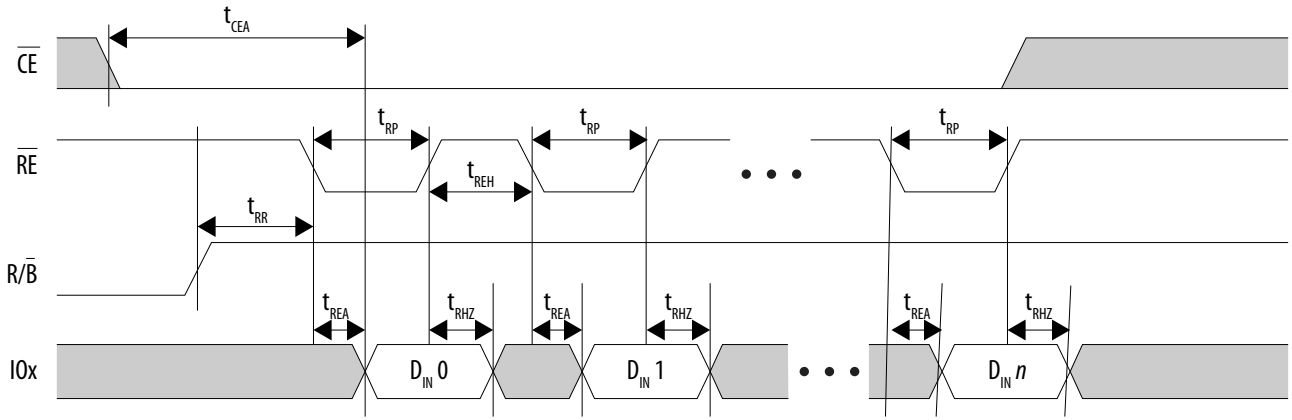

Figure 21. NAND Data Input Timing Diagram for Extended Data Output (EDO) Cycle

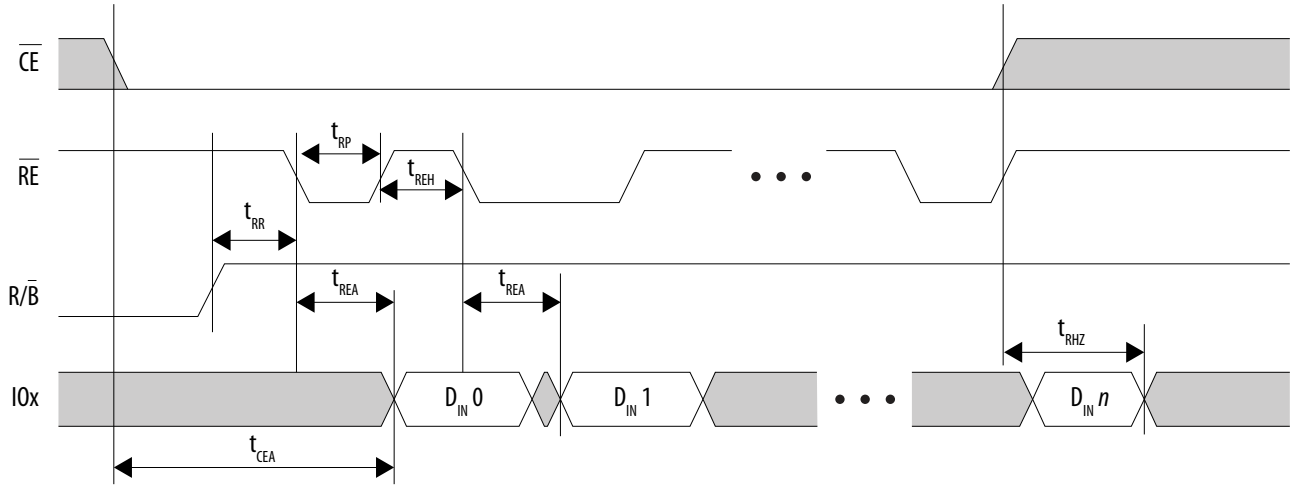

Figure 22. NAND Read Status Timing Diagram

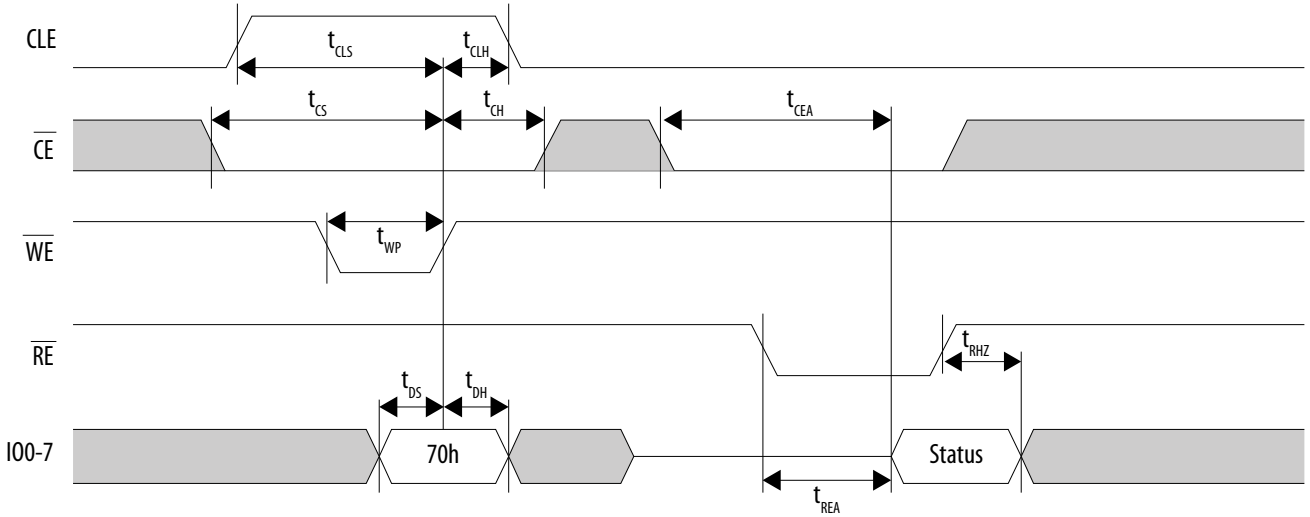

Figure 23. NAND Read Status Enhanced Timing Diagram

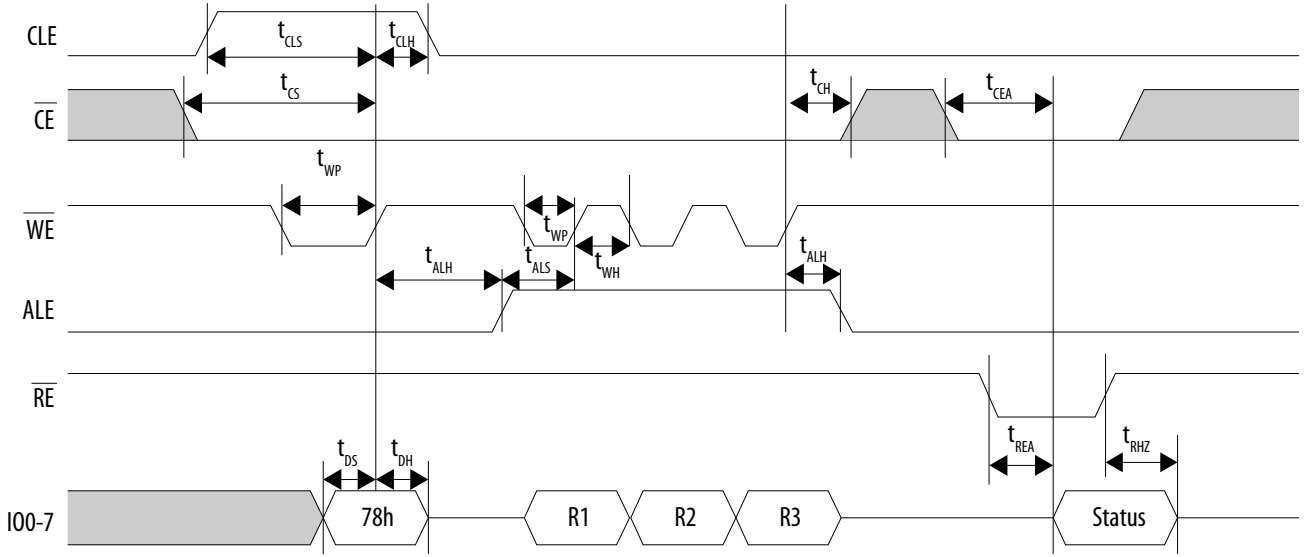

Trace Timing Characteristics

Table 75. Trace Timing Requirements for Intel Arria 10 Devices

To increase the trace bandwidth, Intel recommends routing the trace interface to the FPGA in the HPS Platform Designer (Standard) component. The FPGA trace interface offers a 32-bit single data rate path that can be converted to double data rate to minimize FPGA I/O usage.

Depending on the trace module that you connect to the HPS trace interface, you may need to include board termination to achieve the maximum sampling speed possible. Refer to your trace module datasheet for termination recommendations.

Symbol	Description	Min	Typ	Max	Unit
T_{clk}	CLK clock period	10	—	—	ns
$T_{dutycycle}$	CLK maximum duty cycle	45	50	55	%
T_d	CLK to D0–D3 output data delay	–0.5	—	1	ns

Figure 24. Trace Timing Diagram

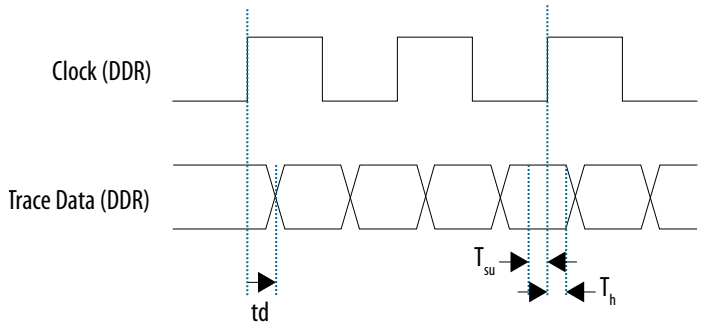

GPIO Interface

The general-purpose I/O (GPIO) interface has debounce circuitry included to remove signal glitches. The debounce clock frequency ranges from 125 Hz to 32 kHz. The minimum pulse width is one debounce clock cycle and the minimum detectable GPIO pulse width is 62.5 µs (at 32 kHz). Any pulses shorter than two debounce clock cycles are filtered by the GPIO peripheral.

If the external signal is less than one clock cycle, the external signal is filtered. If the external signal is between one and two clock cycles, the external signal may or may not be filtered depending on the phase of the signal. If the external signal is more than two clock cycles, the external signal will not be filtered.

To ensure that the external signal is correctly debounced, set the debounce clock low enough so that by the time two debounce clock periods have passed, the signal has settled.

Configuration Specifications

This section provides configuration specifications and timing for Intel Arria 10 devices.

POR Specifications

Power-on reset (POR) delay is defined as the delay between the time when all the power supplies monitored by the POR circuitry reach the minimum recommended operating voltage to the time when the `nSTATUS` is released high and your device is ready to begin configuration.

Table 76. Fast and Standard POR Delay Specification for Intel Arria 10 Devices

POR Delay	Minimum	Maximum	Unit
Fast	4	12 (115)	ms
Standard	100	300	ms

Related Information

MSEL Pin Settings
Provides more information about POR delay based on MSEL pin settings for each configuration scheme.

JTAG Configuration Timing

Table 77. JTAG Timing Parameters and Values for Intel Arria 10 Devices

Symbol	Description	Min	Max	Unit
t_{JCP}	TCK clock period	30, 167 (116)	—	ns
t_{JCH}	TCK clock high time	14	—	ns
t_{JCL}	TCK clock low time	14	—	ns
$t_{JPSU\ (TDI)}$	TDI JTAG port setup time	2	—	ns
$t_{JPSU\ (TMS)}$	TMS JTAG port setup time	3	—	ns
t_{JPH}	JTAG port hold time	5	—	ns
t_{JPCO}	JTAG port clock to output	—	11	ns
t_{JPZX}	JTAG port high impedance to valid output	—	14	ns
t_{JPXZ}	JTAG port valid output to high impedance	—	14	ns

(115) The maximum pulse width of the fast POR delay is 12 ms, providing enough time for the PCIe hard IP to initialize after the POR trip.

(116) The minimum TCK clock period is 167 ns if V_{CCBAT} is within the range 1.2 V – 1.5 V when you perform the volatile key programming.

Related Information

Glossary on page 96
Provides the JTAG configuration timing waveforms in the JTAG Timing Specifications term.

FPP Configuration Timing

DCLK-to-DATA[] Ratio (r) for FPP Configuration

Fast passive parallel (FPP) configuration requires a different `DCLK`-to-`DATA[]` ratio when you turn on encryption or the compression feature.

Depending on the `DCLK`-to-`DATA[]` ratio, the host must send a `DCLK` frequency that is *r* times the `DATA[]` rate in byte per second (Bps) or word per second (Wps). For example, in FPP ×16 where the *r* is 2, the `DCLK` frequency must be 2 times the `DATA[]` rate in Wps.

Table 78. DCLK-to-DATA[] Ratio for Intel Arria 10 Devices

You cannot turn on encryption and compression at the same time for Intel Arria 10 devices.

Configuration Scheme	Encryption	Compression	DCLK-to-DATA[] Ratio (r)
FPP (8-bit wide)	Off	Off	1
	On	Off	1
	Off	On	2
FPP (16-bit wide)	Off	Off	1
	On	Off	2
	Off	On	4
FPP (32-bit wide)	Off	Off	1
	On	Off	4
	Off	On	8

FPP Configuration Timing when DCLK-to-DATA[] = 1

Note: When you enable decompression or the design security feature, the DCLK-to-DATA[] ratio varies for FPP ×8, FPP ×16, and FPP ×32. For the respective DCLK-to-DATA[] ratio, refer to the DCLK-to-DATA[] Ratio for Intel Arria 10 Devices table.

Table 79. FPP Timing Parameters When the DCLK-to-DATA[] Ratio is 1 for Intel Arria 10 Devices

Use these timing parameters when the decompression and design security features are disabled.

Symbol	Parameter	Minimum	Maximum	Unit
t_{CF2CD}	nCONFIG low to CONF_DONE low	—	1,440	ns
t_{CF2ST0}	nCONFIG low to nSTATUS low	—	960	ns
t_{CFG}	nCONFIG low pulse width	2	—	µs
t_{STATUS}	nSTATUS low pulse width	268	3,000 (117)	µs
t_{CF2ST1}	nCONFIG high to nSTATUS high	—	3,000 (118)	µs
t_{CF2CK} (119)	nCONFIG high to first rising edge on DCLK	3,010	—	µs
t_{ST2CK} (119)	nSTATUS high to first rising edge of DCLK	10	—	µs
t_{DSU}	DATA[] setup time before rising edge on DCLK	5.5	—	ns
t_{DH}	DATA[] hold time after rising edge on DCLK	0	—	ns
t_{CH}	DCLK high time	$0.45 \times 1/f_{MAX}$	—	s
t_{CL}	DCLK low time	$0.45 \times 1/f_{MAX}$	—	s
t_{CLK}	DCLK period	$1/f_{MAX}$	—	s
f_{MAX}	DCLK frequency (FPP ×8/×16/×32)	—	100	MHz

continued...

(117) This value is applicable if you do not delay configuration by extending the nCONFIG or nSTATUS low pulse width.

(118) This value is applicable if you do not delay configuration by externally holding the nSTATUS low.

(119) If nSTATUS is monitored, follow the t_{ST2CK} specification. If nSTATUS is not monitored, follow the t_{CF2CK} specification.

Symbol	Parameter	Minimum	Maximum	Unit
t_{CD2UM}	CONF_DONE high to user mode (120)	175	830	µs
t_{CD2CU}	CONF_DONE high to CLKUSR enabled	4 × maximum DCLK period	—	—
t_{CD2UMC}	CONF_DONE high to user mode with CLKUSR option on	t_{CD2CU} + (600 × CLKUSR period)	—	—

Related Information

FPP Configuration Timing
Provides the FPP configuration timing waveforms.

FPP Configuration Timing when DCLK-to-DATA[] >1

Table 80. FPP Timing Parameters When the DCLK-to-DATA[] Ratio is >1 for Intel Arria 10 Devices

Use these timing parameters when you use the decompression and design security features.

Symbol	Parameter	Minimum	Maximum	Unit
t_{CF2CD}	nCONFIG low to CONF_DONE low	—	1,440	ns
t_{CF2ST0}	nCONFIG low to nSTATUS low	—	960	ns
t_{CFG}	nCONFIG low pulse width	2	—	µs
t_{STATUS}	nSTATUS low pulse width	268	3,000 (121)	µs
t_{CF2ST1}	nCONFIG high to nSTATUS high	—	3,000 (121)	µs
t_{CF2CK} (122)	nCONFIG high to first rising edge on DCLK	3,010	—	µs
t_{ST2CK} (122)	nSTATUS high to first rising edge of DCLK	10	—	µs

continued...

(120) The minimum and maximum numbers apply only if you chose the internal oscillator as the clock source for initializing the device.

(121) You can obtain this value if you do not delay configuration by extending the nCONFIG or nSTATUS low pulse width.

(122) If nSTATUS is monitored, follow the t_{ST2CK} specification. If nSTATUS is not monitored, follow the t_{CF2CK} specification.

Symbol	Parameter	Minimum	Maximum	Unit
t_{DSU}	DATA[] setup time before rising edge on DCLK	5.5	—	ns
t_{DH}	DATA[] hold time after rising edge on DCLK	$N–1/f_{DCLK}$ (123)	—	s
t_{CH}	DCLK high time	$0.45 \times 1/f_{MAX}$	—	s
t_{CL}	DCLK low time	$0.45 \times 1/f_{MAX}$	—	s
t_{CLK}	DCLK period	$1/f_{MAX}$	—	s
f_{MAX}	DCLK frequency (FPP ×8/×16/×32)	—	100	MHz
t_{CD2UM}	CONF_DONE high to user mode (124)	175	830	µs
t_{CD2CU}	CONF_DONE high to CLKUSR enabled	4 × maximum DCLK period	—	—
t_{CD2UMC}	CONF_DONE high to user mode with CLKUSR option on	t_{CD2CU} + (600 × CLKUSR period)	—	—

Related Information

FPP Configuration Timing
Provides the FPP configuration timing waveforms.

(123) *N* is the DCLK-to-DATA ratio and f_{DCLK} is the DCLK frequency the system is operating.

(124) The minimum and maximum numbers apply only if you use the internal oscillator as the clock source for initializing the device.

AS Configuration Timing

Table 81. AS Timing Parameters for AS ×1 and AS ×4 Configurations in Intel Arria 10 Devices

The minimum and maximum numbers apply only if you choose the internal oscillator as the clock source for initializing the device.

The t_{CF2CD}, t_{CF2ST0}, t_{CFG}, t_{STATUS}, and t_{CF2ST1} timing parameters are identical to the timing parameters for passive serial (PS) mode listed in PS Timing Parameters for Intel Arria 10 Devices table.

Symbol	Parameter	Minimum	Maximum	Unit
t_{CO}	DCLK falling edge to AS_DATA0/ASDO output	—	2	ns
t_{SU}	Data setup time before falling edge on DCLK	1	—	ns
t_{DH}	Data hold time after falling edge on DCLK	1.5	—	ns
t_{CD2UM}	CONF_DONE high to user mode	175	830	µs
t_{CD2CU}	CONF_DONE high to CLKUSR enabled	4 × maximum DCLK period	—	—
t_{CD2UMC}	CONF_DONE high to user mode with CLKUSR option on	t_{CD2CU} + (600 × CLKUSR period)	—	—

Related Information

- PS Configuration Timing on page 88
- AS Configuration Timing
  Provides the AS configuration timing waveform.

DCLK Frequency Specification in the AS Configuration Scheme

Table 82. DCLK Frequency Specification in the AS Configuration Scheme

This table lists the internal clock frequency specification for the AS configuration scheme.

The DCLK frequency specification applies when you use the internal oscillator as the configuration clock source.

The AS multi-device configuration scheme does not support DCLK frequency of 100 MHz.

You can only set 12.5, 25, 50, and 100 MHz in the Intel Quartus Prime software.

Parameter	Minimum	Typical	Maximum	Intel Quartus Prime Software Settings	Unit
DCLK frequency in AS configuration scheme	5.3	7.5	9.7	12.5	MHz
	10.5	15.0	19.3	25.0	MHz
	21.0	30.0	38.5	50.0	MHz
	42.0	60.0	77.0	100.0	MHz

PS Configuration Timing

Table 83. PS Timing Parameters for Intel Arria 10 Devices

Symbol	Parameter	Minimum	Maximum	Unit
t_{CF2CD}	nCONFIG low to CONF_DONE low	—	1,440	ns
t_{CF2ST0}	nCONFIG low to nSTATUS low	—	960	ns
t_{CFG}	nCONFIG low pulse width	2	—	µs
t_{STATUS}	nSTATUS low pulse width	268	3,000 (125)	µs
t_{CF2ST1}	nCONFIG high to nSTATUS high	—	3,000 (126)	µs

continued...

(125) This value is applicable if you do not delay configuration by extending the nCONFIG or nSTATUS low pulse width.

(126) This value is applicable if you do not delay configuration by externally holding the nSTATUS low.

Symbol	Parameter	Minimum	Maximum	Unit
t_{CF2CK} (127)	nCONFIG high to first rising edge on DCLK	3,010	—	µs
t_{ST2CK} (127)	nSTATUS high to first rising edge of DCLK	10	—	µs
t_{DSU}	DATA[] setup time before rising edge on DCLK	5.5	—	ns
t_{DH}	DATA[] hold time after rising edge on DCLK	0	—	ns
t_{CH}	DCLK high time	$0.45 \times 1/f_{MAX}$	—	s
t_{CL}	DCLK low time	$0.45 \times 1/f_{MAX}$	—	s
t_{CLK}	DCLK period	$1/f_{MAX}$	—	s
f_{MAX}	DCLK frequency	—	125	MHz
t_{CD2UM}	CONF_DONE high to user mode (128)	175	830	µs
t_{CD2CU}	CONF_DONE high to CLKUSR enabled	4 × maximum DCLK period	—	—
t_{CD2UMC}	CONF_DONE high to user mode with CLKUSR option on	t_{CD2CU} + (600 × CLKUSR period)	—	—

Related Information

PS Configuration Timing
Provides the PS configuration timing waveform.

(127) If nSTATUS is monitored, follow the t_{ST2CK} specification. If nSTATUS is not monitored, follow the t_{CF2CK} specification.

(128) The minimum and maximum numbers apply only if you choose the internal oscillator as the clock source for initializing the device.

Initialization

Table 84. Initialization Clock Source Option and the Maximum Frequency for Intel Arria 10 Devices

Initialization Clock Source	Configuration Scheme	Maximum Frequency (MHz)	Number of Clock Cycles for Initialization
Internal Oscillator	AS, PS, and FPP	12.5	600
CLKUSR (129)(130)	AS, PS, and FPP	100	

Configuration Files

There are two types of configuration bit stream formats for different configuration schemes:

- PS and FPP—Raw Binary File (`.rbf`)
- AS—Raw Programming Data File (`.rpd`)

The `.rpd` file size follows the Intel configuration devices capacity. However, the actual configuration bit stream size for `.rpd` file is the same as `.rbf` file.

(129) To enable CLKUSR as the initialization clock source, in the Intel Quartus Prime software, select **Device and Pin Options ➤ General ➤ Device initialization clock source ➤ CLKUSR pin**.

(130) If you use the CLKUSR pin for AS and transceiver calibration simultaneously, the only allowed frequency is 100 MHz.

Table 85. Configuration Bit Stream Sizes for Intel Arria 10 Devices

Use this table to estimate the file size before design compilation. Different configuration file formats, such as a hexadecimal file (`.hex`) or tabular text file (`.ttf`) format, have different file sizes.

For the different types of configuration file and file sizes, refer to the Intel Quartus Prime software. However, for a specific version of the Intel Quartus Prime software, any design targeted for the same device has the same uncompressed configuration file size.

I/O configuration shift register (IOCSR) is a long shift register that facilitates the device I/O peripheral settings. The IOCSR bit stream is part of the uncompressed configuration bit stream, and it is specifically for the Configuration via Protocol (CvP) feature.

Uncompressed configuration bit stream sizes are subject to change for improvements and optimizations in the configuration algorithm. This table shows the estimated configuration bit stream sizes. Refer to the `.rbf` file generated in the Intel Quartus Prime software for the actual bit stream size.

Variant	Product Line	Uncompressed Configuration Bit Stream Size (bits)	IOCSR Bit Stream Size (bits)	Recommended EPCQ-L Serial Configuration Device
Intel Arria 10 GX	GX 160	91,729,632	2,523,136	EPCQ-L256 or higher density
	GX 220	91,729,632	2,523,136	EPCQ-L256 or higher density
	GX 270	130,638,432	2,523,136	EPCQ-L256 or higher density
	GX 320	130,638,432	2,523,136	EPCQ-L256 or higher density
	GX 480	189,710,176	2,719,744	EPCQ-L256 or higher density
	GX 570	252,959,072	2,916,352	EPCQ-L256 or higher density
	GX 660	252,959,072	2,916,352	EPCQ-L256 or higher density
	GX 900	351,292,512	2,785,280	EPCQ-L512 or higher density
	GX 1150	351,292,512	2,785,280	EPCQ-L512 or higher density
Intel Arria 10 GT	GT 900	351,292,512	2,785,280	EPCQ-L512 or higher density
	GT 1150	351,292,512	2,785,280	EPCQ-L512 or higher density
Intel Arria 10 SX	SX 160	91,729,632	2,523,136	EPCQ-L256 or higher density
	SX 220	91,729,632	2,523,136	EPCQ-L256 or higher density
	SX 270	130,638,432	2,523,136	EPCQ-L256 or higher density
	SX 320	130,638,432	2,523,136	EPCQ-L256 or higher density

continued...

Variant	Product Line	Uncompressed Configuration Bit Stream Size (bits)	IOCSR Bit Stream Size (bits)	Recommended EPCQ-L Serial Configuration Device
	SX 480	189,710,176	2,719,744	EPCQ-L256 or higher density
	SX 570	252,959,072	2,916,352	EPCQ-L256 or higher density
	SX 660	252,959,072	2,916,352	EPCQ-L256 or higher density

Minimum Configuration Time Estimation

Table 86. Minimum Configuration Time Estimation for Intel Arria 10 Devices

The estimated values are based on the uncompressed configuration bit stream sizes in the Configuration Bit Stream Sizes for Intel Arria 10 Devices table

Variant	Product Line	Active Serial (131)			Fast Passive Parallel (132)		
		Width	DCLK (MHz)	Minimum Configuration Time (ms)	Width	DCLK (MHz)	Minimum Configuration Time (ms)
Intel Arria 10 GX	GX 160	4	100	229.32	32	100	28.67
	GX 220	4	100	229.32	32	100	28.67
	GX 270	4	100	326.6	32	100	40.82
	GX 320	4	100	326.6	32	100	40.82
	GX 480	4	100	474.28	32	100	59.28
	GX 570	4	100	632.4	32	100	79.05
	GX 660	4	100	632.4	32	100	79.05
	GX 900	4	100	878.23	32	100	109.78
	GX 1150	4	100	878.23	32	100	109.78

continued...

(131) The minimum configuration time is calculated based on DCLK frequency of 100 MHz. Only external `CLKUSR` may guarantee the frequency accuracy of 100 MHz. If you use internal oscillator of 100 MHz, you may not get the actual frequency of 100 MHz. For the DCLK frequency using internal oscillator, refer to the DCLK Frequency Specification in the AS Configuration Scheme table.

(132) Maximum FPGA FPP bandwidth may exceed bandwidth available from some external storage or control logic.

Variant	Product Line	Active Serial [131]			Fast Passive Parallel [132]		
		Width	DCLK (MHz)	Minimum Configuration Time (ms)	Width	DCLK (MHz)	Minimum Configuration Time (ms)
Intel Arria 10 GT	GT 900	4	100	878.23	32	100	109.78
	GT 1150	4	100	878.23	32	100	109.78
Intel Arria 10 SX	SX 160	4	100	229.32	32	100	28.67
	SX 220	4	100	229.32	32	100	28.67
	SX 270	4	100	326.6	32	100	40.82
	SX 320	4	100	326.6	32	100	40.82
	SX 480	4	100	474.28	32	100	59.28
	SX 570	4	100	632.4	32	100	79.05
	SX 660	4	100	632.4	32	100	79.05

Related Information

- Configuration Files on page 90
- DCLK Frequency Specification in the AS Configuration Scheme on page 88
  Provides the DCLK frequency using internal oscillator.

(131) The minimum configuration time is calculated based on DCLK frequency of 100 MHz. Only external `CLKUSR` may guarantee the frequency accuracy of 100 MHz. If you use internal oscillator of 100 MHz, you may not get the actual frequency of 100 MHz. For the DCLK frequency using internal oscillator, refer to the DCLK Frequency Specification in the AS Configuration Scheme table.

(132) Maximum FPGA FPP bandwidth may exceed bandwidth available from some external storage or control logic.

Remote System Upgrades

Table 87. Remote System Upgrade Circuitry Timing Specifications for Intel Arria 10 Devices

Parameter	Minimum	Maximum	Unit
$f_{MAX_RU_CLK}$ (133)	—	40	MHz
$t_{RU_nCONFIG}$ (134)	250	—	ns
$t_{RU_nRSTIMER}$ (135)	250	—	ns

Related Information

- Remote System Upgrade State Machine
  Provides more information about configuration reset (`RU_CONFIG`) signal.
- User Watchdog Timer
  Provides more information about `reset_timer` (`RU_nRSTIMER`) signal.

User Watchdog Internal Circuitry Timing Specifications

Table 88. User Watchdog Internal Oscillator Frequency Specifications for Intel Arria 10 Devices

Parameter	Minimum	Typical	Maximum	Unit
User watchdog internal oscillator frequency	5.3	7.9	12.5	MHz

(133) This clock is user-supplied to the remote system upgrade circuitry. If you are using the Remote Update Intel FPGA IP core, the clock user-supplied to the Remote Update Intel FPGA IP core must meet this specification.

(134) This is equivalent to strobing the reconfiguration input of the Remote Update Intel FPGA IP core high for the minimum timing specification.

(135) This is equivalent to strobing the reset_timer input of the Remote Update Intel FPGA IP core high for the minimum timing specification.

I/O Timing

I/O timing data is typically used prior to designing the FPGA to get an estimate of the timing budget as part of the timing analysis. You may generate the I/O timing report manually using the Timing Analyzer or using the automated script.

The Intel Quartus Prime Timing Analyzer provides a more accurate and precise I/O timing data based on the specifics of the design after you complete place-and-route.

Related Information

AN 775: I/O Timing Information Generation Guidelines
Provides the techniques to generate I/O timing information using the Intel Quartus Prime software.

Programmable IOE Delay

Table 89. IOE Programmable Delay for Intel Arria 10 Devices

For the exact values for each setting, use the latest version of the Intel Quartus Prime software. The values in the table show the delay of programmable IOE delay chain with maximum offset settings after excluding the intrinsic delay (delay at minimum offset settings).

Programmable IOE delay settings are only applicable for I/O buffers and do not apply for any other delay elements in the PHYLite for Parallel Interfaces Intel Arria 10 FPGA IP core.

Parameter [136]	Maximum Offset	Minimum Offset [137]	Fast Model		Slow Model			Unit
			Extended	Industrial	–E1S, –E1H, –I1S, –I1H	–E2L, –E2S, –I2L, –I2S	–E3L, –E3S, –I3L, –I3S	
Input Delay Chain Setting (`IO_IN_DLY_CHN`)	63	0	2.012	2.003	4.541	5.241	6.035	ns
Output Delay Chain Setting (`IO_OUT_DLY_CHN`)	15	0	0.478	0.475	1.088	1.263	1.462	ns

(136) You can set this value in the Intel Quartus Prime software by selecting **Input Delay Chain Setting** or **Output Delay Chain Setting** in the **Assignment Name** column.

(137) Minimum offset does not include the intrinsic delay.

Glossary

Table 90. Glossary

Term	Definition
Differential I/O Standards	Receiver Input Waveforms **Single-Ended Waveform** 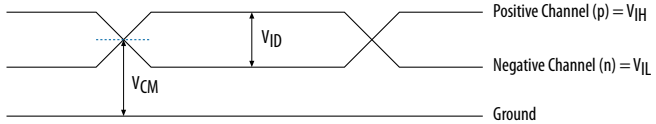 **Differential Waveform** Transmitter Output Waveforms **Single-Ended Waveform** 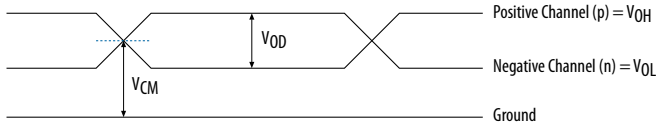 **Differential Waveform**
f_{HSCLK}	I/O PLL input clock frequency.
f_{HSDR}	High-speed I/O block—Maximum/minimum LVDS data transfer rate (f_{HSDR} = 1/TUI), non-DPA.

continued...

Term	Definition
$f_{HSDRDPA}$	High-speed I/O block—Maximum/minimum LVDS data transfer rate ($f_{HSDRDPA}$ = 1/TUI), DPA.
J	High-speed I/O block—Deserialization factor (width of parallel data bus).
JTAG Timing Specifications	JTAG Timing Specifications: 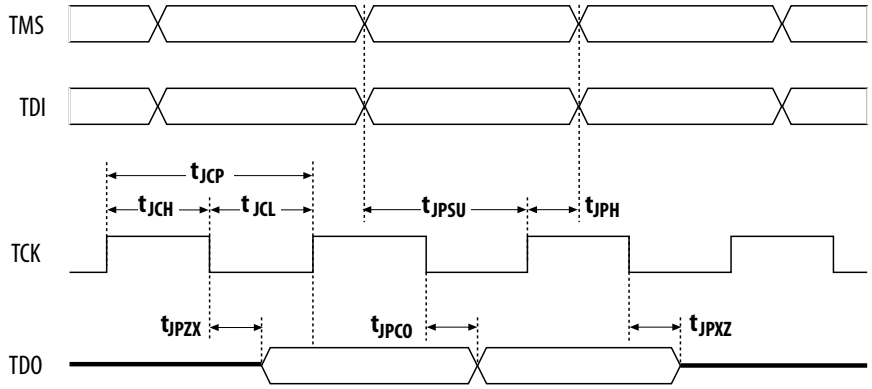
R_L	Receiver differential input discrete resistor (external to the Intel Arria 10 device).
Sampling window (SW)	Timing Diagram—the period of time during which the data must be valid in order to capture it correctly. The setup and hold times determine the ideal strobe position in the sampling window, as shown: 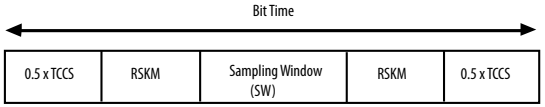
Single-ended voltage referenced I/O standard	The JEDEC standard for the SSTL and HSTL I/O defines both the AC and DC input signal values. The AC values indicate the voltage levels at which the receiver must meet its timing specifications. The DC values indicate the voltage levels at which the final logic state of the receiver is unambiguously defined. After the receiver input has crossed the AC value, the receiver changes to the new logic state. The new logic state is then maintained as long as the input stays beyond the DC threshold. This approach is intended to provide predictable receiver timing in the presence of input waveform ringing. Single-Ended Voltage Referenced I/O Standard

continued...

Term	Definition
	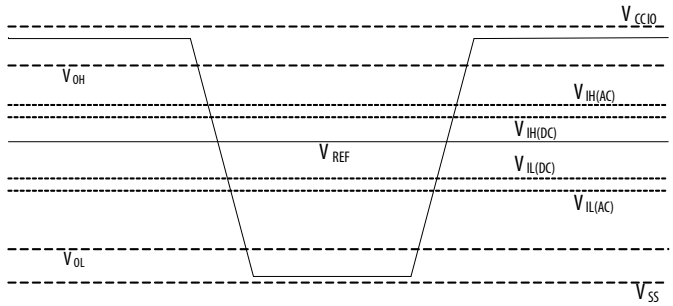
t_C	High-speed receiver/transmitter input and output clock period.
TCCS (channel-to-channel-skew)	The timing difference between the fastest and slowest output edges, including the t_{CO} variation and clock skew, across channels driven by the same PLL. The clock is included in the TCCS measurement (refer to the Timing Diagram figure under SW in this table).
t_{DUTY}	High-speed I/O block—Duty cycle on high-speed transmitter output clock.
t_{FALL}	Signal high-to-low transition time (80–20%)
t_{INCCJ}	Cycle-to-cycle jitter tolerance on the PLL clock input
t_{OUTPJ_IO}	Period jitter on the GPIO driven by a PLL
t_{OUTPJ_DC}	Period jitter on the dedicated clock output driven by a PLL
t_{RISE}	Signal low-to-high transition time (20–80%)
Timing Unit Interval (TUI)	The timing budget allowed for skew, propagation delays, and the data sampling window. (TUI = 1/(Receiver Input Clock Frequency Multiplication Factor) = t_C/w).
$V_{CM(DC)}$	DC Common mode input voltage.
V_{ICM}	Input Common mode voltage—The common mode of the differential signal at the receiver.
V_{ID}	Input differential voltage swing—The difference in voltage between the positive and complementary conductors of a differential transmission at the receiver.
$V_{DIF(AC)}$	AC differential input voltage—Minimum AC input differential voltage required for switching.
$V_{DIF(DC)}$	DC differential input voltage— Minimum DC input differential voltage required for switching.

continued...

Term	Definition
V_{IH}	Voltage input high—The minimum positive voltage applied to the input which is accepted by the device as a logic high.
$V_{IH(AC)}$	High-level AC input voltage
$V_{IH(DC)}$	High-level DC input voltage
V_{IL}	Voltage input low—The maximum positive voltage applied to the input which is accepted by the device as a logic low.
$V_{IL(AC)}$	Low-level AC input voltage
$V_{IL(DC)}$	Low-level DC input voltage
V_{OCM}	Output Common mode voltage—The common mode of the differential signal at the transmitter.
V_{OD}	Output differential voltage swing—The difference in voltage between the positive and complementary conductors of a differential transmission line at the transmitter.
V_{SWING}	Differential input voltage
V_{IX}	Crossing point of differential signal 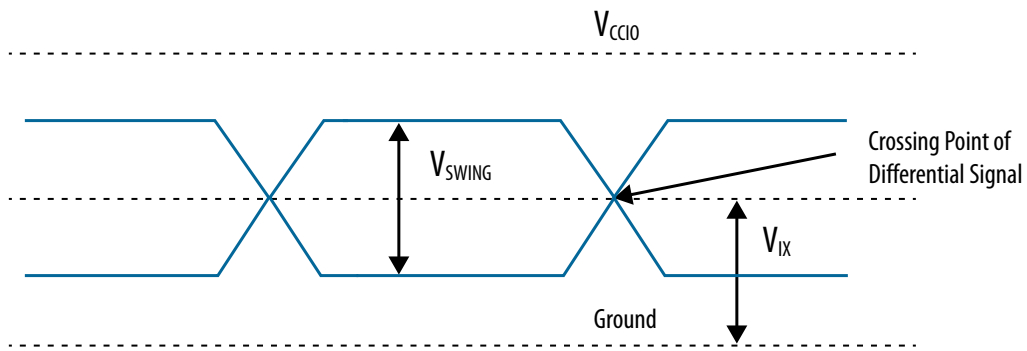
V_{OX}	Output differential cross point voltage
W	High-speed I/O block—Clock Boost Factor

Document Revision History for the Intel Arria 10 Device Datasheet

Document Version	Changes
2022.02.14	• Added T_J specifications for Military devices in the *Recommended Operating Conditions for Intel Arria 10 Devices* table. • Removed table description from the *I/O Pin Leakage Current for Intel Arria 10 Devices* table. • Changed I/O standards from RSDS (HIO) to RSDS and Mini-LVDS (HIO) to Mini-LVDS in the *Differential I/O Standards Specifications for Intel Arria 10 Devices* table. • Updated the conditions for V_{ICM} (AC and DC coupled) in the *Transceiver Specifications for Intel Arria 10 GX, SX, and GT Devices — Receiver Specifications* table. • Removed diagram: *DPA Lock Time Specifications with DPA PLL Calibration Enabled*. • Added footnote to Maximum Data Transition in the *DPA Lock Time Specifications for Intel Arria 10 Devices* table. • Updated the *Configuration Bit Stream Sizes for Intel Arria 10 Devices* table. ☐ Updated table description. ☐ Updated Uncompressed Configuration Bit Stream Size and IOCSR Bit Stream Size. • Updated Minimum Configuration Time in the *Minimum Configuration Time Estimation for Intel Arria 10 Devices* table.
2020.06.26	Removed the note on HPS_PORSEL from t_{RAMP} in the *Recommended Operating Conditions for Intel Arria 10 Devices* table. `HPS_PORSEL` pin is not available for Intel Arria 10 devices.
2020.03.20	Corrected T_h from 10 ns to 0 ns in the *Management Data Input/Output (MDIO) Timing Requirements for Intel Arria 10 Devices* table.
2019.06.24	• Updated the definitions for the power options. • Updated the note to the speed grades in the *High-Speed I/O Specifications for Intel Arria 10 Devices* table. • Updated the definition and added a waveform for V_{IX} in the *Glossary*.
2018.11.29	Removed t_R and t_F specifications in the *FPP Timing Parameters When the DCLK-to-DATA[] Ratio is >1 for Intel Arria 10 Devices* table.
2018.09.24	Removed specifications for automotive-grade devices (–A3 speed grade).
2018.06.15	• Added *Intel Arria 10 Devices Overshoot Duration* figure and description. • Removed *Equation for OCT Variation Without Recalibration*. • Updated the descriptions for $T_{dssfrst}$, T_{dsslst}, T_{su}, and T_h in the *Quad Serial Peripheral Interface (SPI) Flash Timing Requirements for Intel Arria 10 Devices* table. • Updated the column header from "Minimum Number of Clock Cycles" to "Number of Clock Cycles for Initialization" in the *Initialization Clock Source Option and the Maximum Frequency for Intel Arria 10 Devices* table.
2018.04.06	• Added notes to I_{OUT} specification in the *Absolute Maximum Ratings for Intel Arria 10 Devices* table. • Updated the maximum frequency for DDR3L SDRAM in the *Memory Standards Supported by the HPS Hard Memory Controller for Intel Arria 10 Devices* table.

Date	Version	Changes
January 2018	2018.01.09	• Added –E1H and –I1H speed grades. • Removed –E2V and –I2V speed grades. • Added a note to the –A3 speed grade to state that the specifications for automotive-grade devices are preliminary, pending characterization. • Updated the *Recommended Operating Conditions for Intel Arria 10 Devices* table. ☐ Added a note to V_I ☐ Removed the note to T_J for Industrial and Automotive devices. Note removed: –40°C is only applicable to Start of Test, when the device is powered-on. The device does not stay at the minimum junction temperature for a long time. • Updated the note to RSDS (HIO) and Mini-LVDS (HIO) in the *Differential I/O Standards Specifications for Intel Arria 10 Devices* table. • Added KDB link on PLL jitter compensation in the following tables: ☐ *Fractional PLL Specifications for Intel Arria 10 Devices* ☐ *I/O PLL Specifications for Intel Arria 10 Devices* • Corrected the clock name from "osc1 clock" to `osc1_clk` and added a note in the *HPS Reset Input Requirements for Intel Arria 10 Devices* table. • Added description about the `HPS_CLK1` pin in the *HPS PLL Input Requirements* section. • Updated the note for T_{su} and T_h in the *Secure Digital (SD)/MultiMediaCard (MMC) Timing Requirements for Intel Arria 10 Devices* table. • Updated the note to `CLKUSR` in the *Initialization Clock Source Option and the Maximum Frequency for Intel Arria 10 Devices* table. • Updated the *I/O Timing* section on the I/O timing information generation guidelines. • Updated the description and maximum offset values in the *IOE Programmable Delay for Intel Arria 10 Devices* table.
June 2017	2017.06.16	• Added specifications for automotive-grade devices. • Removed –E1L and –I1L speed grades. • Clarified the voltage requirement footnote for PCIe Gen3 support in the "Transceiver Power Supply Operating Conditions for Intel Arria 10 GX/SX Devices" table. • Added notes for T_J for Industrial and Automotive devices in Recommended Operating Conditions for Intel Arria 10 Devices table. • Updated the description for V_{CCH_GXB} in the following tables: ☐ Absolute Maximum Ratings for Intel Arria 10 Devices ☐ Transceiver Power Supply Operating Conditions for Intel Arria 10 GX/SX Devices ☐ Transceiver Power Supply Operating Conditions for Intel Arria 10 GT Devices • Added full pin names in the "Transceiver Power Supply Operating Conditions for Intel Arria 10 GX/SX Devices" table. • Clarified that the channel span for the x1 and x6 clock networks is six channels in a single bank in the "Transceiver Clock Network Maximum Data Rate Specifications" table. • Updated f_{VCO} specifications in Fractional PLL Specifications for Intel Arria 10 Devices table.

continued...

Date	Version	Changes
		• Updated the following tables to keep only the maximum frequencies: ☐ Memory Standards Supported by the Hard Memory Controller for Intel Arria 10 Devices ☐ Memory Standards Supported by the Soft Memory Controller for Intel Arria 10 Devices ☐ Memory Standards Supported by the HPS Hard Memory Controller for Intel Arria 10 Devices • Updated the description for Memory Output Clock Jitter Specifications for Intel Arria 10 Devices table. • Updated the unit for "Cold reset deassertion to BSEL sampling, using osc1 clock" in HPS Reset Input Requirements for Intel Arria 10 Devices table. • Updated the name of the internal reference clock to `SPI_REF_CLK` in the footnote in the following tables: ☐ SPI Master Timing Requirements for Intel Arria 10 Devices ☐ SPI Slave Timing Requirements for Intel Arria 10 Devices • Updated maximum values for t_{CF2CD} from 600 ns to 1,440 ns and t_{CF2ST0} from 600 ns to 960 ns in the following tables: ☐ FPP Timing Parameters When the DCLK-to-DATA[] Ratio is 1 for Intel Arria 10 Devices ☐ FPP Timing Parameters When the DCLK-to-DATA[] Ratio is >1 for Intel Arria 10 Devices ☐ PS Timing Parameters for Intel Arria 10 Devices
May 2017	2017.05.08	• Updated V_{CCBAT} specifications in Recommended Operating Conditions for Intel Arria 10 Devices table. • Changed the maximum skew specification for the xN clock line in the "Transmitter Channel-to-channel Skew Specifications" table. • Changed the PCIe Gen3 HIP-Fabric interface spec for E3S and I3S devices in the "High-Speed Serial Transceiver-Fabric Interface Performance for Intel Arria 10 GX/SX Devices" table. • Changed the conditions for V_{ICM} in the "Receiver Specifications" table. • Removed the DC Coupling specifications footnote from the "Receiver Specifications" table. • Changed the conditions for the differential on-chip termination resistors parameter in the "Transmitter Specifications" table. • Updated the footnote for V_{ICM} (AC and DC coupled) parameter in the "Receiver Specifications" table. • Added footnotes to the minimum specifications for the fPLL input reference clock frequency in the "Reference Clock Specifications" table depending on the selected mode. • Changed the Core Speed Grade options in the "High-Speed Serial Transceiver-Fabric Interface Performance for Intel Arria 10 GX/SX Devices" table. • Added information on power supply using early I/O release configuration flow in HPS Specifications section. • Added description in the Configuration Bit Stream Sizes for Intel Arria 10 Devices table.
March 2017	2017.03.15	• Changed the minimum value for the fPLL input reference clock frequency in the "Reference Clock Specifications" table. • Added a footnote to the Supported I/O Standards parameter in the "Receiver Specifications" table. • Added a footnote to $V_{CCR_GXB[L,\ R]}$ and $V_{CCT_GXB[L,\ R]}$ in the "Transceiver Power Supply Operating Conditions for Arria 10 GX/SX Devices" table.

continued...

Date	Version	Changes
		• Added f_{CASC_INPFD} specification in the following tables: ☐ Fractional PLL Specifications for Intel Arria 10 Devices ☐ I/O PLL Specifications for Intel Arria 10 Devices • Updated links to the External Memory Interface Spec Estimator in the following sections: ☐ Memory Standards Supported by the Hard Memory Controller ☐ Memory Standards Supported by the Soft Memory Controller ☐ Memory Standards Supported by the HPS Hard Memory Controller • Updated Maximum HPS Clock Frequencies Across Device Speed Grades for Intel Arria 10 Devices table. ☐ Removed temperature ranges. ☐ Updated mpu_base_clk specification from 1,000 MHz to 1,200 MHz in –1 speed grade for V_{CCL_HPS} = 0.9 V (typical). • Updated HPS PLL VCO output maximum specification from 2,000 MHz to 2,400 MHz in -1 speed grade for V_{CCL_HPS} = 0.9 V in HPS PLL Performance for Intel Arria 10 Devices table. • Updated links to the Intel Arria 10 SoC Device Design Guidelines in the following sections: ☐ USB ULPI Timing Characteristics ☐ Ethernet Media Access Controller (EMAC) Timing Characteristics • Updated uncompressed configuration bit stream size (bits) in Configuration Bit Stream Sizes for Intel Arria 10 Devices table. • Added descriptions for Programmable IOE Delay. • Removed PowerPlay text from tool name. • Rebranded as Intel.
October 2016	2016.10.31	• Added reference to the Intel Arria 10 SoC Device Design Guidelines for the USB 2.0 Transceiver Macrocell Interface Plus (UTMI+) Low Pin Interface (ULPI) Timing Requirements for Intel Arria 10 Devices table. • Added reference to the Intel Arria 10 SoC Device Design Guidelines for the RGMII RX Timing Requirements for Intel Arria 10 Devices table. • Updated the f_{VCO} values in the Fractional PLL Specifications for Intel Arria 10 Devices table. • Updated the t_{OUTPJ_DC} and t_{OUTCCJ_DC} values in the I/O PLL Specifications for Intel Arria 10 Devices table. • Updated the description to the DPA Lock Time Specifications for Intel Arria 10 Devices table as the specifications are applicable to both extended and industrial grades. • Updated the description to the Maximum HPS Clock Frequencies Across Device Speed Grades for Intel Arria 10 Devices table as the specifications are applicable to both extended and industrial temperatures. • Removed Preliminary tag for the Trace Timing Requirements for Intel Arria 10 Devices table. • Changed the condition for the slew rate setting in the "Transmitter Specifications" table.
June 2016	2016.06.24	• Updated V_{CCL_HPS} specifications in HPS Power Supply Operating Conditions for Intel Arria 10 SX Devices table. • Restructured the following tables: ☐ OCT Calibration Accuracy Specifications for Intel Arria 10 Devices ☐ OCT Without Calibration Resistance Tolerance Specifications for Intel Arria 10 Devices • Removed PCML information in Differential I/O Standards Specifications for Intel Arria 10 Devices table.

continued...

Date	Version	Changes
		• Changed values in the "Transmitter and Receiver Data Rate Performance" table. • Updated specifications for memory standards supported by the hard memory controller, soft memory controller, and HPS hard memory controller. • Updated DLL operating frequency range in DLL Frequency Range Specifications for Intel Arria 10 Devices table. • Updated Memory Output Clock Jitter Specifications for Intel Arria 10 Devices table. • Updated HPS Clock Performance specifications. • Updated HPS PLL Performance for Intel Arria 10 Devices table. ☐ Updated HPS PLL VCO output –3 speed grade maximum specification for 0.95 V V_{CCL_HPS}. ☐ Added HPS PLL VCO output specifications for 0.90 V V_{CCL_HPS}. ☐ Added h2f_user0_clk and h2f_user1_clk specifications. • Added a new table for HPS PLL Output Specifications. • Updated Quad Serial Peripheral Interface (SPI) Flash Timing Requirements for Intel Arria 10 Devices table. ☐ Updated QSPI_CLK clock name. ☐ Updated T_{clk}, $T_{dssfrst}$, T_{dsslst}, and T_{do} specifications. ☐ Added T_{su} and T_h specifications. ☐ Removed T_{din_start} and T_{din_end} specifications. • Updated $T_{dssfrst}$, T_{dsslst}, T_{dio}, and T_{su} specifications in SPI Master Timing Requirements for Intel Arria 10 Devices table. • Updated T_h and T_d specifications in SPI Slave Timing Requirements for Intel Arria 10 Devices table. • Updated T_{su}, T_h, and T_d specifications in Secure Digital (SD)/MultiMediaCard (MMC) Timing Requirements for Intel Arria 10 Devices table. • Added a note to T_d in Reduced Gigabit Media Independent Interface (RGMII) TX Timing Requirements for Intel Arria 10 Devices table. • Updated T_h specifications in RGMII RX Timing Requirements for Intel Arria 10 Devices table. • Updated T_d specifications in RMII TX Timing Requirements for Intel Arria 10 Devices table. • Added notes in I^2C Timing Requirements for Intel Arria 10 Devices table. • Updated Trace Timing Requirements for Intel Arria 10 Devices table. ☐ Added description about increasing trace bandwidth. ☐ Updated T_{clk} minimum specification from 5 ns to 10 ns. • Updated the information on GPIO interface.

continued...

Date	Version	Changes
		• Updated the following timing diagrams: ☐ Quad SPI Flash Serial Output Timing Diagram ☐ Quad SPI Flash Serial Input Timing Diagram ☐ SPI Master Output Timing Diagram ☐ SPI Master Input Timing Diagram ☐ SPI Slave Output Timing Diagram ☐ SPI Slave Input Timing Diagram ☐ I^2C Timing Diagram ☐ NAND Address Latch Timing Diagram ☐ NAND Data Input Timing Diagram for Extended Data Output (EDO) Cycle ☐ NAND Read Status Timing Diagram ☐ Trace Timing Diagram • Updated DCLK Frequency Specification in the AS Configuration Scheme table. • Updated IOCSR bit stream sizes in Configuration Bit Stream Sizes for Intel Arria 10 Devices table. • Corrected product line naming in the following tables: ☐ Configuration Bit Stream Sizes for Intel Arria 10 Devices ☐ Minimum Configuration Time Estimation for Intel Arria 10 Devices • Updated IOE Programmable Delay for Intel Arria 10 Devices table. • Removed Preliminary tags for all tables, except Trace Timing Requirements for Intel Arria 10 Devices table.
May 2016	2016.05.02	• Updated Recommended Operating Conditions for Intel Arria 10 Devices table. ☐ Added specifications for 0.95 V typical value for V_{CC}, V_{CCP}, and V_{CCERAM}. ☐ Updated SmartVID specifications for V_{CC} and V_{CCP}. ☐ Updated notes to V_{CC}, V_{CCP}, V_{CCERAM}, and V_{CCBAT}. • Updated specifications for SSTL-12 240-Ω R_S, SSTL-135 34-Ω R_S, and SSTL-135 40-Ω R_S in OCT Calibration Accuracy Specifications for Intel Arria 10 Devices table. • Removed the condition V_{CCIO} = 1.5 for 100-Ω R_D in OCT Without Calibration Resistance Tolerance Specifications for Intel Arria 10 Devices table. • Changed pin capacitance to maximum values. • Added SSTL-135 Class I, II, SSTL-125 Class I, II, and SSTL-12 Class I, II I/O standards in the following tables: ☐ Single-Ended SSTL, HSTL, and HSUL I/O Reference Voltage Specifications for Intel Arria 10 Devices ☐ Single-Ended SSTL, HSTL, and HSUL I/O Standards Signal Specifications for Intel Arria 10 Devices ☐ Differential SSTL I/O Standards Specifications for Intel Arria 10 Devices • Corrected V_{OD} specifications for Mini-LVDS (HIO) to 0.6 V in Differential I/O Standards Specifications for Intel Arria 10 Devices table. • Changed the backplane data rates in the "Transceiver Power Supply Operating Conditions for Intel Arria 10 GX/SX Devices" table.

continued...

Date	Version	Changes
		• Changed the conditions and backplane data rates in the "Transceiver Power Supply Operating Conditions for Intel Arria 10 GT Devices" table. • Changed the backplane data rates in the "Transceiver Performance for Intel Arria 10 GX/SX Devices" section. • Changed the backplane data rates in the "Transceiver Performance for Intel Arria 10 GT Devices" section. • Changed the minimum frequency in the "CMU PLL Performance" table. • Changed the conditions and added a description to the "High-Speed Serial Transceiver-Fabric Interface Performance for Intel Arria 10 GX/SX Devices" table. • Removed transceiver speed grade 5 from all tables in the "Transceiver Performance for Intel Arria 10 GX/SX Devices" section. • Changed the notes in the "Transmitter and Receiver Data Rate Performance" table. • Added a description to the "High-Speed Serial Transceiver-Fabric Interface Performance for Intel Arria 10 GT Devices" table. • Changed the clock network names in the "Transceiver Clock Network Maximum Data Rate Specifications" table. • Changed the conditions in the "High-Speed Serial Transceiver-Fabric Interface Performance for Intel Arria 10 GT Devices" table. • Changed the channel span specifications in the "Transmitter Channel-to-channel Skew Specifications" table. • Updated f_{VCO}, f_{CLBW}, t_{PLL_PSERR}, and jitter specifications in Fractional PLL Specifications for Intel Arria 10 Devices table. • Updated $t_{OUTDUTY}$ and jitter specifications in I/O PLL Specifications for Intel Arria 10 Devices table. • Updated the note to f_{IN} specifications for fPLL and IOPLL. • Updated High-Speed I/O Specifications for Intel Arria 10 Devices table. ☐ Added true RSDS and true mini-LVDS output standards data rates. ☐ Updated speed grades to reflect SmartVID specifications. ☐ Updated Transmitter f_{HSDR} and Receiver $f_{HSDRDPA}$ specifications. ☐ Added minimum data rate for Receiver $f_{HSDRDPA}$ specifications. • Updated LVDS I/O bank and 3 V I/O bank specifications, and added SmartVID specifications in Memory Standards Supported by the Hard Memory Controller for Intel Arria 10 Devices and Memory Standards Supported by the Soft Memory Controller for Intel Arria 10 Devices tables. • Added new table: Memory Standards Supported by the HPS Hard Memory Controller for Intel Arria 10 Devices. • Updated t_{CO} from 4 ns to 2 ns in AS Timing Parameters for AS ×1 and AS ×4 Configurations in Intel Arria 10 Devices table. • Added IOCSR definition and updated column heading from "IOCSR .rbf Size (bits)" to "IOCSR Bit Stream Size (bits)" in Configuration Bit Stream Sizes for Intel Arria 10 Devices table. • Removed M suffix and V_{CC} PowerManager feature.
February 2016	2016.02.11	• Changed the datarates in the "Transceiver Power Supply Operating Conditions for Intel Arria 10 GT Devices" table. • Changed the available speed grades and datarates in the "Transceiver Performance for Intel Arria 10 GT Devices" table. • Changed the available speed grades and datarates in the "ATX PLL Performance" table.

continued...

Date	Version	Changes
		• Changed the available speed grades and datarates in the "Fractional PLL Performance" table. • Changed the available speed grades in the "CMU PLL Performance" table. • Changed the available speed grades and frequencies in the "High-Speed Serial Transceiver-Fabric Interface Performance for Arria 10 GT Devices" table.
December 2015	2015.12.31	• Updated M20K block specifications for "True dual port, all supported widths" and "ROM, all supported widths" in the Memory Clock Performance Specifications (V_{CC} and V_{CCP} at 0.9 V Typical Value) table. • Updated maximum resolution from 8 bit 6 bit and added minimum clock frequency of 0.1 MHz in Internal Voltage Sensor Specifications for Intel Arria 10 Devices table. • Updated the sinusoidal jitter from 0.35 UI to 0.28 UI in LVDS Soft-CDR/DPA Sinusoidal Jitter Tolerance Specifications.
December 2015	2015.12.18	• Changed the minimum specifications in the "Transceiver Power Supply Operating Conditions for Arria 10 GT Devices" table. • Changed conditions in the "Transmitter and Receiver Data Rate Performance" table.
November 2015	2015.11.02	• Added power option V which is supported with the SmartVID feature (lowest static power). • Added note for SmartVID in Recommended Operating Conditions for Intel Arria 10 Devices table. Note: SmartVID is supported in devices with −2V and −3V speed grades only. • Removed 20-Ω R_T in OCT Calibration Accuracy Specifications for Intel Arria 10 Devices table. • Updated specifications in OCT Without Calibration Resistance Tolerance Specifications for Intel Arria 10 Devices table. • Updated the note for Value column in the Internal Weak Pull-Up Resistor Values for Intel Arria 10 Devices table. Added Internal Weak Pull-Down Resistor Values for Intel Arria 10 Devices table. • Updated fractional PLL specifications: ☐ Updated f_{IN} minimum from 50 MHz to 30 MHz and maximum from 1000 MHz to 800 MHz for all speed grades. ☐ Updated f_{INPFD} minimum from 50 MHz to 30 MHz and maximum from 325 MHz to 700 MHz. ☐ Updated f_{VCO} minimum from 3.125 GHz to 3.5 GHz and maximum from 6.25 GHz to 7.05 GHz. ☐ Updated $t_{EINDUTY}$ minimum from 40% to 45% and maximum from 60% to 55%. ☐ Removed the conditions for f_{OUT} and f_{CLBW}. ☐ Updated the descriptions for $f_{DYCONFIGCLK}$, t_{LOCK}, and t_{ARESET}. • Added −E2V, −I2V, −E3V, and −I3V speed grades in DSP Block Performance Specifications for Intel Arria 10 Devices (V_{CC} and V_{CCP} at 0.9 V Typical Value) table. • Updated Memory Block Performance Specifications for Intel Arria 10 Devices table for V_{CC} and V_{CCP} at 0.9 V typical value. Added memory block performance specifications for V_{CC} and V_{CCP} at 0.95 V typical value. • Removed the "Minimum Resolution with no Missing Codes" column in Internal Temperature Sensing Diode Specifications for Intel Arria 10 Devices table. • Added a link in the Internal Temperature Sensing Diode Specifications section: *Transfer Function for Internal TSD* topic in the *Power Management in Intel Arria 10 Devices* chapter, *Intel Arria 10 Core Fabric and General Purpose I/Os Handbook*. • Added descriptions to External Temperature Sensing Diode Specifications for Intel Arria 10 Devices table.

continued...

Date	Version	Changes
		• Updated Internal Voltage Sensor Specifications for Intel Arria 10 Devices table. ☐ Updated maximum resolution from 12 bits to 8 bits. Removed minimum resolution value. ☐ Updated maximum integral non-linearity (INL) from ±3 LSB to ±1 LSB. ☐ Updated maximum clock frequency from 20 MHz to 11 MHz. ☐ Added gain error and offset error specifications. ☐ Removed signal to noise and distortion ratio (SNR) specifications. ☐ Removed Bipolar input mode specifications. • Updated "slow clock" to "core clock" in DPA Lock Time Specifications with DPA PLL Calibration Enabled diagram. • Updated the maximum values of the following conditions for Transmitter True Differential I/O Standards - f_{HSDR} (data rate) parameter in High-Speed I/O Specifications for Intel Arria 10 Devices table. ☐ SERDES factor J = 2, uses DDR registers ☐ SERDES factor J = 1, uses DDR registers • Added the following tables: ☐ Memory Standards Supported by the Hard Memory Controller for Intel Arria 10 Devices ☐ Memory Standards Supported by the Soft Memory Controller for Intel Arria 10 Devices • Updated minimum T_{OCTCAL} value from 1000 cycles to 2000 cycles in OCT Calibration Block Specifications for Intel Arria 10 Devices table. • Updated the hmc_free_clk specifications for the following speed grades in HPS Clock Performance for Intel Arria 10 Devices table: ☐ –1 speed grade: Updated from 667 MHz to 533 MHz. ☐ –2 speed grade: Updated from 544 MHz to 533 MHz. • Changed from T_{sclk} to T_{clk} and added the following specifications in the Quad Serial Peripheral Interface (SPI) Flash Timing Requirements for Intel Arria 10 Devices table. ☐ T_{qspi_clk} ☐ T_{din_start} ☐ T_{din_end} • Updated SPI Master Timing Requirements for Intel Arria 10 Devices table. ☐ Changed the symbol from T_{spi_clk} to T_{clk}. ☐ Added note to $T_{dssfrst}$, T_{dsslst}, and T_h. ☐ Updated note to T_{su}. ☐ Updated the description for T_{su} and T_h. • Updated the note to T_{ssfsu}, T_{ssfh}, T_{sslsu}, and T_{sslh} in the SPI Slave Timing Requirements for Intel Arria 10 Devices table. • Updated the following timing diagrams: ☐ Quad SPI Flash Serial Output Timing Diagram ☐ SPI Master Output Timing Diagram ☐ SPI Slave Output Timing Diagram

continued...

Date	Version	Changes
		• Added the following timing diagrams: ☐ Quad SPI Flash Serial Input Timing Diagram ☐ SPI Master Input Timing Diagram ☐ SPI Slave Input Timing Diagram • Updated Secure Digital (SD)/MultiMediaCard (MMC) Timing Requirements for Intel Arria 10 Devices table. ☐ Changed T_{clk} to $T_{sdmmc_clk_out}$ and `TMMC_CLK` to `TSDMMC_CLK_OUT`. ☐ Updated T_d min from 5.5 ns to 8.5 ns and max from 12.5 ns to 11.5 ns. ☐ Updated note to T_d. • Changed the title and symbols in the following timing diagrams: ☐ Changed from "NAND Data Input Cycle Timing Diagram" to "NAND Data Output Cycle Timing Diagram". Changed from D_{IN} to D_{OUT}. ☐ Changed from "NAND Data Output Cycle Timing Diagram" to "NAND Data Input Cycle Timing Diagram". Changed from D_{OUT} to D_{IN}. ☐ Changed from "NAND Extended Data Output (EDO) Cycle Timing Diagram" to "NAND Data Input Timing Diagram for Extended Data Output (EDO) Cycle". Changed from D_{OUT} to D_{IN}. • Changed from "ARM Trace Timing Characteristics" to "Trace Timing Characteristics". • Updated the description in the GPIO Interface topic. • Updated FPP Timing Parameters When the DCLK-to-DATA[] Ratio is 1 for Intel Arria 10 Devices table. ☐ Updated the maximum value for t_{STATUS} and t_{CF2ST1} from 1,506 µs to 3,000 µs. ☐ Updated f_{MAX} for FPP ×8/×16 from 125 MHz to 100 MHz. ☐ Updated the minimum value for t_{CF2CK} from 1,506 µs to 3,010 µs. ☐ Updated the minimum value for t_{ST2CK} from 2 µs to 10 µs. ☐ Updated the maximum value for t_{CD2UM} from 437 µs to 830 µs. • Updated FPP Timing Parameters When the DCLK-to-DATA[] Ratio is >1 for Intel Arria 10 Devices table. ☐ Updated the maximum value for t_{STATUS} and t_{CF2ST1} from 1,506 µs to 3,000 µs. ☐ Updated f_{MAX} for FPP ×8/×16 from 125 MHz to 100 MHz. ☐ Updated the minimum value for t_{CF2CK} from 1,506 µs to 3,010 µs. ☐ Updated the minimum value for t_{ST2CK} from 2 µs to 10 µs. ☐ Updated the maximum value for t_{CD2UM} from 437 µs to 830 µs. • Updated maximum value for t_{CD2UM} from 437 µs to 830 µs in AS Timing Parameters for AS ×1 and AS ×4 Configurations in Intel Arria 10 Devices table. • Updated PS Timing Parameters for Intel Arria 10 Devices table. ☐ Updated the maximum value for t_{STATUS} and t_{CF2ST1} from 1,506 µs to 3,000 µs ☐ Updated the minimum value for t_{CF2CK} from 1,506 µs to 3,010 µs. ☐ Updated the minimum value for t_{ST2CK} from 2 µs to 10 µs. ☐ Updated the maximum value for t_{CD2UM} from 437 µs to 830 µs.

continued...

Date	Version	Changes
		• Added description about `.rbf` and `.rpd` files in the Configuration Files section. Changed the table title from "Uncompressed Uncompressed .rbf Sizes Sizes for Intel Arria 10 Devices" to "Configuration Bit Stream Sizes for Intel Arria 10 Devices". • Updated the note to Active Serial in Minimum Configuration Time Estimation for Intel Arria 10 Devices table. Note: The minimum configuration time is calculated based on DCLK frequency of 100 MHz. Only external `CLKUSR` may guarantee the frequency accuracy of 100 MHz. If you use internal oscillator of 100 MHz, you may not get the actual frequency of 100 MHz. For the DCLK frequency using internal oscillator, refer to the DCLK Frequency Specification in the AS Configuration Scheme table. • Changed instances of *Quartus II* to *Quartus Prime*. • Changed voltages and conditions in the "Transceiver Power Supply Operating Conditions for Arria 10 GX/SX Devices" table. • Changed maximum data rate conditions in the "Transmitter and Receiver Data Rate Performance" table. • Changed conditions in the "Transmitter and Receiver Data Rate Performance" table in the *Transceiver Performance for Arria 10 GT Devices* section. • Changed conditions in the "Reference Clock Specifications" table. • Changed the clock networks in the "Transceiver Clock Network Maximum Data Rate Specifications" table. • Changed conditions in the "Receiver Specifications" table. • Changed conditions in the "Transmitter Specifications" table. • Changed the minimum frequency in the "ATX PLL Performance," "Fractional PLL Performance," and "CMU PLL Performance" tables in the *Transceiver Performance for Intel Arria 10 GX/SX Devices* section. • Changed the minimum frequeny in the "ATX PLL Performance," "Fractional PLL Performance," and "CMU PLL Performance" tables in the *Transceiver Performance for Intel Arria 10 GT Devices* section. • Added a parameter to the "Reference Clock Specifications" table. • Added footnote to the "Transmitter Specifications" table.
June 2015	2015.06.12	• Changed the specifications for the backplane maximum data rate condition in the "Transmitter and Receiver Data Rate Performance" table for Intel Arria 10 GX/SX devices. • Changed the specifications for transmitter `REFCLK` phase noise in the "Reference Clock Specifications" table. • Added note in the following tables: ☐ Absolute Maximum Ratings for Intel Arria 10 Devices: V_{CCPGM} ☐ Maximum Allowed Overshoot During Transitions for Intel Arria 10 Devices: LVDS I/O ☐ Recommended Operating Conditions for Intel Arria 10 Devices: V_I • Added HPS Specifications. • Updated recommended EPCQ-L serial configuration devices in the Uncompressed .rbf Sizes table.
May 2015	2015.05.08	Made the following changes: • Changed the specifications for the V_{ICM} (AC coupled) parameter in the "Reference Clock Specifications" table. • Changed the maximum frequency in the "CMU PLL Performance" table in the *Transceiver Performance for GT Devices* section. • Added a footnote to the transceiver speed grade 5 column in the "Transmitter and Receiver Data Rate Performance" table.

continued...

Date	Version	Changes
May 2015	2015.05.04	• Updated the Maximum Allowed Overshoot During Transitions for Intel Arria 10 Devices table. • Added a note to t_{ramp} in the Recommended Operating Conditions for Intel Arria 10 Devices table. Note: t_{ramp} is the ramp time of each individual power supply, not the ramp time of all combined power supplies. • Changed the minimum, typical, and maximum values for the transmitter and receiver power supply in the "Transceiver Power Supply Operating Conditions for Intel Arria 10 GT Devices" table. • Added –1 speed grade in the condition column for V_{CCL_HPS} at 0.95 V in HPS Power Supply Operating Conditions for Intel Arria 10 SX Devices table. • Added –I1S, –I2S, and –E2S speed grades to the following tables: ☐ Clock Tree Performance for Intel Arria 10 Devices ☐ DSP Block Performance Specifications for Intel Arria 10 Devices ☐ Memory Block Performance Specifications for Intel Arria 10 Devices ☐ High-Speed I/O Specifications for Intel Arria 10 Devices ☐ Memory Output Clock Jitter Specifications for Intel Arria 10 Devices • Updated f_{IN} minimum value from 27 MHz to 50 MHz for all speed grades in the Fractional PLL Specifications for Intel Arria 10 Devices table. • Changed the description for f_{INPFD} to "Input clock frequency to the PFD" in the I/O PLL Specifications for Intel Arria 10 Devices table. • Updated DSP Block Performance Specifications for Intel Arria 10 Devices table for V_{CC} and V_{CCP} at 0.9 V typical value. Added DSP specifications for V_{CC} and V_{CCP} at 0.95 V typical value. • Updated I_{bias} minimum value from 8 µA to 10 µA and maximum value from 200 µA to 100 µA in the External Temperature Sensing Diode Specifications for Intel Arria 10 Devices table. • Added DPA (soft CDR mode) specifications in High-Speed I/O Specifications for Intel Arria 10 Devices table. • Added description in POR Specifications section: Power-on reset (POR) delay is defined as the delay between the time when all the power supplies monitored by the POR circuitry reach the minimum recommended operating voltage to the time when the `nSTATUS` is released high and your device is ready to begin configuration. • Moved the following timing diagrams to the Configuration, Design Security, and Remote System Upgrades in Arria 10 Devices chapter. ☐ FPP Configuration Timing Waveform When the DCLK-to-DATA[] Ratio is 1 ☐ FPP Configuration Timing Waveform When the DCLK-to-DATA[] Ratio is >1 ☐ AS Configuration Timing Waveform ☐ PS Configuration Timing Waveform • Removed the DCLK-to-DATA[] ratio when both encryption and compression are turned on. Added description to the table: You cannot turn on encryption and compression at the same time for Intel Arria 10 devices. • Updated the AS Timing Parameters for AS ×1 and AS ×4 Configurations in Intel Arria 10 Devices table as follows: ☐ Changed the symbol for data hold time from t_H to t_{DH}. ☐ Updated the minimum value for t_{SU} from 0 ns to 1 ns. ☐ Updated the minimum value for t_{DH} from 2.5 ns to 1.5 ns. • Added a note to the DCLK Frequency Specification in the AS Configuration Scheme table. Note: You can only set 12.5, 25, 50, and 100 MHz in the Intel Quartus Prime software.

continued...

Date	Version	Changes
		• Added a note to the Initialization Clock Source Option and the Maximum Frequency for Intel Arria 10 Devices. Note: If you use the `CLKUSR` pin for AS and transceiver calibration simultaneously, the only allowed frequency is 100 MHz. • Changed Intel Arria 10 GS to Intel Arria 10 SX in Uncompressed .rbf Sizes and Minimum Configuration Time Estimation tables. • Added IO_IN_DLY_CHN and IO_OUT_DLY_CHN in the IOE Programmable Delay table. • Changed the Min/Typ/Max description for the V_{ICM} (AC coupled) parameter in the "Reference Clock Specifications" table. • Changed the Min/Typ/Max values in the "Transceiver Power Supply Operating Conditions for Arria 10 GX/SX Devices" table. • Changed the Min/Typ/Max values in the "Transceiver Power Supply Operating Conditions for Arria 10 GT Devices" table. • Added a footnote to the maximum data rate for GT channels in the "Transceiver Performance for GT Devices" section. • Made the following changes to the "Transceiver Performance for Arria 10 GX/SX Devices" section. ☐ Changed the maximum data rate condition for chip-to-chip and backplane in the "Transmitter and Receiver Data Rate Performance" table. ☐ Added TX minimum data rate to the "Transmitter and Receiver Data Rate Performance" table. ☐ Changed the minimum frequency in the "ATX PLL Performance" table. ☐ Changed the minimum frequency in the "Fractional PLL Performance" table. ☐ Changed the minimum and maximum frequency in the "CMU PLL Performance" table. • Made the following changes to the "Transceiver Performance for Arria 10 GT Devices" section. ☐ Added TX minimum data rate to the "Transmitter and Receiver Data Rate Performance" table. ☐ Changed the maximum data rate condition for chip-to-chip and backplane in the "Transmitter and Receiver Data Rate Performance" table. ☐ Changed the minimum frequency in the "ATX PLL Performance" table. ☐ Changed the minimum frequency in the "Fractional PLL Performance" table. ☐ Changed the minimum frequency in the "CMU PLL Performance" table. • Added voltage condition to the maximum peak-to-peak diff p-p after configuration and to the V_{ICM} specifications in the "Receiver Specifications" table. • Changed the voltage conditions for V_{OCM} in the "Transmitter Specifications" table. • Changed the V_{OD}/V_{CCT} Ratios in the "Typical Transmitter V_{OD} Settings" table. • Added the "Transceiver Clock Network Maximum Data Rate Specifications" table.
January 2015	2015.01.23	• Added a note in the "Transceiver Power Supply Operating Conditions" section. • Made the following changes to the "Reference Clock Specifications" table: ☐ Added the input reference clock frequency parameters for the CMU PLL, ATX PLL, and fPLL PLL. ☐ Changed the maximum specification for rise time and fall time. ☐ Added the V_{ICM} (AC and DC coupled) parameters. ☐ Changed the maximum value for Transmitter REFCLK Phase Noise (622 MHz) when ≥ 1 MHz. • Changed the Min, Typ, and Max values for the `reconfig_clk` signal in the "Transceiver Clocks Specifications" table.

continued...

Date	Version	Changes
		• Made the following changes to the "Receiver Specifications" table: ☐ Added the maximum peak-to-peak differential input voltage after device configuration specifications. ☐ Changed the minimum specification for the minimum differential eye opening at receiver serial input pins parameter. ☐ Removed the 120-ohm and 150-ohm conditions for the differential on-chip termination resistors parameter. ☐ Added the V_{ICM} (AC and DC coupled) parameter. ☐ Added the Programmable DC Gain parameter. • Made the following changes to the "Transmitter Specifications" table: ☐ Added the V_{OCM} (AC coupled) parameter. ☐ Added the V_{OCM} (DC coupled) parameter. ☐ Changed the rise and fall time minimum and maximum specifications. • Added the "Typical Transmitter V_{OD} Settings" table. • Added a note to V_{CC}, V_{CCP}, and V_{CCERAM} typical values in Recommended Operating Conditions table. Note: You can operate –1 and –2 speed grade devices at 0.9 V or 0.95 V typical value. You can operate -3 speed grade device at only 0.9 V typical value. Core performance shown in this datasheet is applicable for the operation at 0.9 V. Operating at 0.95 V results in higher core performance and higher power consumption. For more information about the performance and power consumption of 0.95 V operation, refer to the Intel Quartus Prime software timing reports and Early Power Estimator (EPE). • Removed military grade operating junction temperature specifications (T_J) in Recommended Operating Conditions table. • Updated the V_{CCIO} range for HSTL-18 I/O standard in Differential HSTL and HSUL I/O Standards for Arria 10 Devices table as follows: ☐ Min: Updated from 1.425 V to 1.71 V ☐ Typ: Updated from 1.5 V to 1.8 V ☐ Max: Updated from 1.575 V to 1.89 V • Added a statement to Differential I/O Standards Specifications for Intel Arria 10 Devices table: Differential inputs are powered by V_{CCPT} which requires 1.8 V. • Added statement in I/O Standard Specifications: You must perform timing closure analysis to determine the maximum achievable frequency for general purpose I/O standards. • Updated fractional PLL specifications. ☐ Updated f_{OUT_C} to f_{OUT} and updated the maximum value to 644 MHz for all speed grades. ☐ Updated f_{VCO} minimum value from 2.4 GHz to 3.125 GHz. ☐ Removed f_{OUT_L}, k_{VALUE}, and f_{RES} parameters. • Updated I/O PLL specifications. ☐ Updated f_{OUT_C} to f_{OUT} and updated the maximum value to 644 MHz for all speed grades. ☐ Updated f_{OUT_EXT} maximum value to 800 MHz (–1 speed grade), 720 MHz (–2 speed grade), and 650 MHz (–3 speed grade). ☐ Removed f_{RES} parameter. • Updated the description in Periphery Performance Specifications to mention that proper timing closure is required in design.

continued...

Date	Version	Changes
		• Updated AS Timing Parameters for AS x1 and AS x4 Configurations in Intel Arria 10 Devices. ☐ Updated t_{SU} minimum value from 1.5 ns to 0 ns. ☐ Updated t_H minimum value from 0 ns to 2.5 ns. • Updated `CLKUSR` initialization clock source maximum frequency from 125 MHz to 100 MHz for passive configuration schemes (PS and FPP). • Added uncompressed `.rbf` sizes and minimum configuration time estimation for Intel Arria 10 GX and GS devices. • Updated uncompressed `.rbf` sizes for Intel Arria 10 GX 900 and 1150 devices, and Intel Arria 10 GT 900 and 1150 devices. ☐ Updated configuration `.rbf` size from 335,106,890 bits to 351,292,512 bits. ☐ Updated IOCSR `.rbf` size from 6,702,138 bits to 1,885,396 bits. • Updated minimum configuration time estimation for Intel Arria 10 GX 900 and 1150 devices, and Intel Arria 10 GT 900 and 1150 devices for the following configuration modes: ☐ Active serial: Updated from 837.77 ms to 883.20 ms. ☐ Fast Passive Parallel: Updated from 104.72 ms to 110.40 ms.
August 2014	2014.08.18	• Changed the 3 V I/O conditions in Table 2. • Table 3: ☐ Added a note to the Minimum and Maximum operating conditions. ☐ Changed V_{CCERAM} values. ☐ Changed the Maximum recommended operating conditions for 3 V I/O V_I. • Added a note to the I/O pin pull-up tolerance in Table 12. • Changed the V_{IH} values for LVTTL, LVCMOS and 2.5 I/O standards in Table 13. • Table 14, Table 15, and Table 16: ☐ Added SSTL-12 I/O standard. ☐ Removed Class I, II for SSTL-135 and SSTL-125 I/O standards. • Table 19: ☐ Changed the minimum data rate specification for transmitter and receiver data rates. ☐ Changed the minimum frequency specification for the fractional PLL. ☐ Changed the minimum frequency specification for the CMU PLL. • Changed the Core Speed Grade with Power Options section in Table 20. • Table 21: ☐ Changed the minimum data rate specification for transmitter and receiver data rates. ☐ Changed the minimum frequency specification for the Fractional PLL. ☐ Changed the minimum frequency specification for the CMU PLL. ☐ Changed the minimum frequency of the ATX PLL.

continued...

Date	Version	Changes
		• Table 23: ☐ Added a note to the High Speed Differential I/O standard. ☐ Changed the specifications for CLKUSR pin. • Added columns in Table 29. • Changed the maximum f_{HSCLK_in} and $t_{xJitter}$ in Table 32. • Changed the minimum formula for t_{CD2UMC} in Table 42, Table 43, Table 44, and Table 46. • Changed the CLKUSR maximum frequency and minimum number of cycles in Table 47. • Table 48: ☐ Changed the IOCSR `.rbf` size. ☐ Added Recommended EPCQ-L Serial Configuration Device. • Changed the DCLK frequency and minimum configuration time for FPP in Table 49. • Added the following tables: ☐ External Temperature Sensing Diode Specifications for Intel Arria 10 Devices ☐ IOE Programmable Delay for Intel Arria 10 Devices • Removed the following figures: ☐ CTLE Response in High Gain Mode for Intel Arria 10 Devices with Data Rates ≥ 8 Gbps ☐ Removed the CTLE Response in High Gain Mode for Intel Arria 10 Devices with Data Rates < 8 Gbps
March 2014	2014.03.14	Updated Table 3, Table 5, Table 21, Table 23, Table 24, Table 32, and Table 41.
December 2013	2013.12.06	Updated Figure 1 and Figure 2.
December 2013	2013.12.02	Initial release.

Looking for pricing, stock, or lifecycle information?

Click below to explore more details on WIN SOURCE:

- View 10AS048H2F34I1SG on WIN SOURCE
- Altera Information

Optimize Your Supply Chain with WIN SOURCE Solutions

- Global Sourcing Solution
- Obsolete Management
- Cost Control Management
- Shortage Management
- Alternative Solution
- Excess Inventory Management