THE DATASHEET OF

GF0501

www.win-source.net 0086-755-83957316

CUI Devices is now Same Sky! Learn More

MODEL: GF0501 | DESCRIPTION: SPEAKER

FEATURES

- 50 mm
- round frame
- 0.25 W
- 8 Ω
- ferrite magnet
- paper cone

SPECIFICATIONS

parameter	conditions/description	min	typ	max	units
input power			0.25	0.5	W
impedance	at 0.8 kHz, 1.0 V	6.8	8	9.2	Ω
resonant frequency (Fo)	at 1.0 V	360	450	540	Hz
frequency response		Fo		5,900	Hz
sound pressure level	at 0.25 W, 50 cm, avg at 1.0, 1.4, 1.7, 2.0 kHz	84	87	90	dB
buzz, rattle, etc.	must be normal at sine wave			1.41	V
dimensions	Ø50 x 17.2				mm
magnet	ferrite				
cone material	paper				
terminal	solder eyelets				
weight			51.0		g
operating temperature		-25		70	°C
hand soldering	for maximum 3 seconds	360	380	400	°C
RoHS	yes				

MECHANICAL DRAWING

units: mm
tolerance: ±0.8 mm

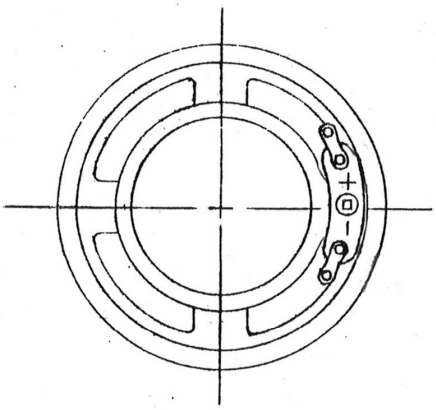

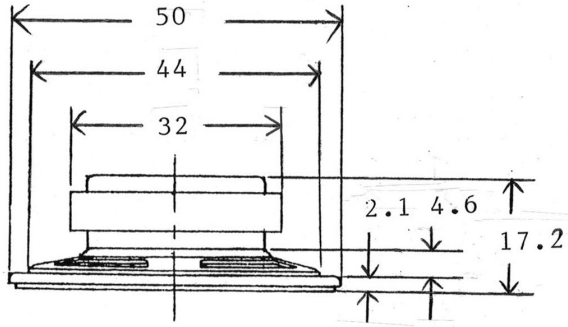

FREQUENCY RESPONSE CURVE

parameter	conditions/description
potentiometer range	50 dB
rectifier	RMS
lower limit frequency	20 Hz
wr. speed	100 mm/sec
zero level	60 dB

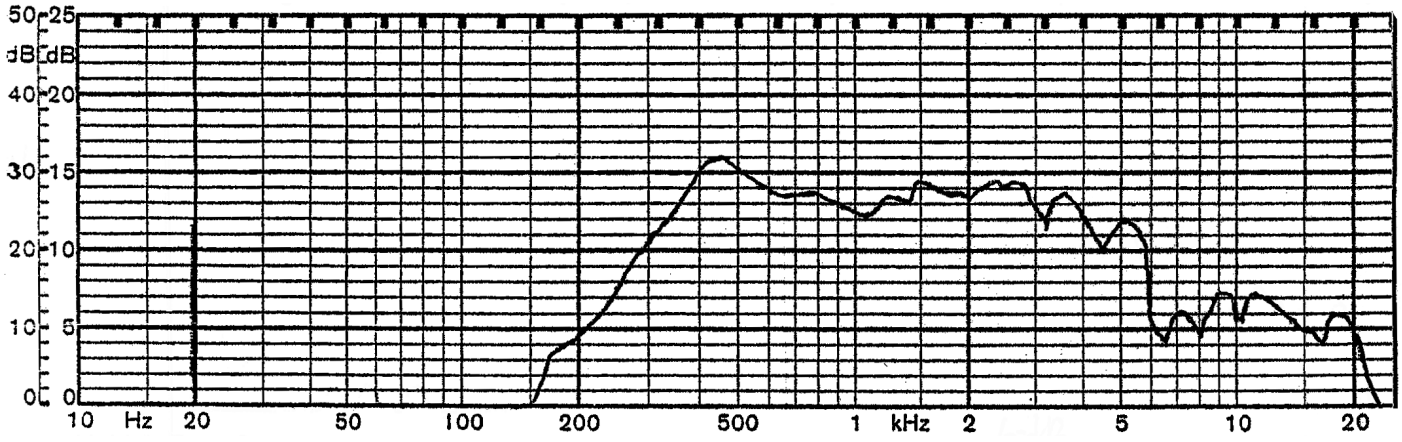

REVISION HISTORY

rev.	description	date
1.0	initial release	09/20/2006
1.01	brand update	10/13/2020
1.02	logo, datasheet style update	08/05/2022
1.03	CUI Devices rebranded to Same Sky	09/11/2024

The revision history provided is for informational purposes only and is believed to be accurate.

Same Sky offers a one (1) year limited warranty. Complete warranty information is listed on our website.

Same Sky reserves the right to make changes to the product at any time without notice. Information provided by Same Sky is believed to be accurate and reliable. However, no responsibility is assumed by Same Sky for its use, nor for any infringements of patents or other rights of third parties which may result from its use.

Same Sky products are not authorized or warranted for use as critical components in equipment that requires an extremely high level of reliability. A critical component is any component of a life support device or system whose failure to perform can be reasonably expected to cause the failure of the life support device or system, or to affect its safety or effectiveness.

Looking for pricing, stock, or lifecycle information?

Click below to explore more details on WIN SOURCE:

- View GF0501 on WIN SOURCE
- Same Sky Information

Optimize Your Supply Chain with WIN SOURCE Solutions

- Global Sourcing Solution
- Obsolete Management
- Cost Control Management
- Shortage Management
- Alternative Solution
- Excess Inventory Management