# THE DATASHEET OF

# K31X-A15S-N

www.win-source.net 0086-755-83957316

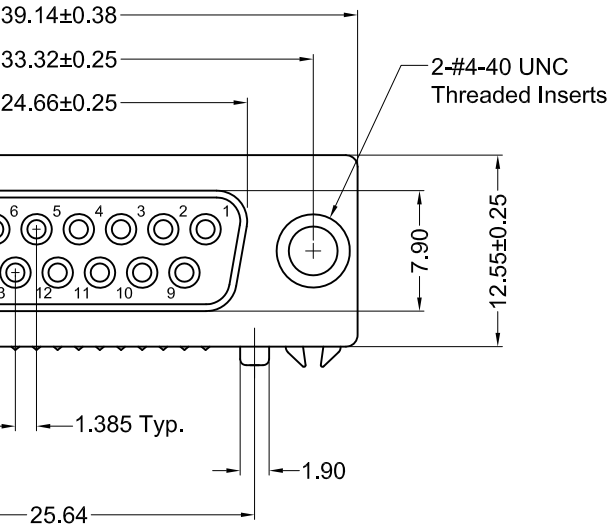


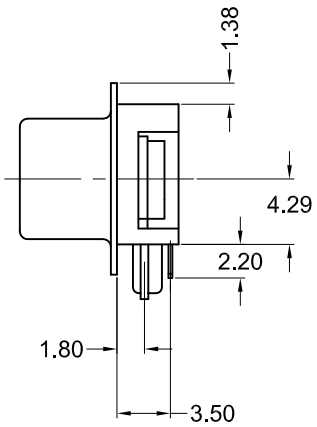


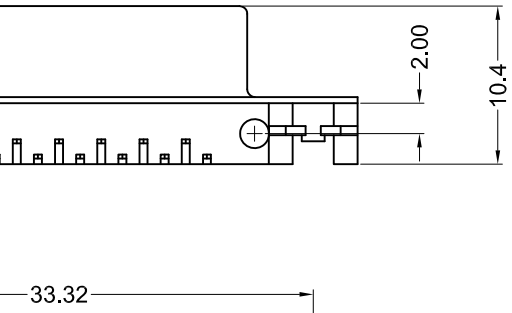


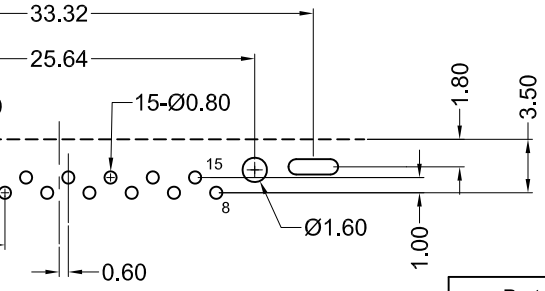


mended PCB Layout
(Top View)

## *Material and Finish*

Insulator: PBT Thermoplastic with Glass-fiber Reinforcement, UL 94V-0 Rated, Color: Black

Shell: Steel, Nickel Plated

Contact Material:
Socket - Phosphor Bronze

Contact Plating Options:

Standard: Gold Flash on Mating End, Tin on Termination End, Nickel Underplate on Entire Contact

15 Option: 15u" Gold on Mating End, Tin on Termination End, Nickel Underplate on Entire Contact

30 Option: 30u" Gold on Mating End, Tin on Termination End, Nickel Underplate on Entire Contact

## *Electrical Specifications*

Rated Current: 2A

Rated Voltage: 30V RMS

Insulation Resistance:
1000 Megohms Min. at 500V DC

Contact Resistance:
13 milliohms Max.

Dielectric Withstanding Voltage:
1000V for 1 Minute

## *Mechanical Specifications*

Operating Temperature:
-55°C to +105°C

| Part Number | Contact Area Plating Finish |
|---|---|
| K31X-A15S-N | Gold Flash (Standard) |
| K31X-A15S-N15 | 15u" Gold (15 Option) |
| K31X-A15S-N30 | 30u" Gold (30 Option) |

RoHS COMPLIANT

C US
LR78160

| Tolerances |
|---|
| X.X ± 0.25<br>X.XX ± 0.15<br>Unless Stated Otherwise |

| V. BY | CHK. BY | DRAWN BY | DATE |
|---|---|---|---|
| Aguirre | H. MA | R. Aguirre | 10/05/05 |
| Vien | H. MA | | |
| Vien | H. MA | | UNITS |
| Vien | P. DalCanto | | |
| . Gih | P. DalCanto | | mm |
| Serrato | C. Furumasu | | |

# K31X-A15S-N

D-Sub, 15 Pin Female, RoHS Compliant

Ultra Compact Footprint

KYCON

## Looking for pricing, stock, or lifecycle information?

Click below to explore more details on WIN SOURCE:

- View K31X-A15S-N on WIN SOURCE
- Kycon, Inc. Information

## Optimize Your Supply Chain with WIN SOURCE Solutions

- Global Sourcing Solution
- Obsolete Management
- Cost Control Management
- Shortage Management
- Alternative Solution
- Excess Inventory Management