THE DATASHEET OF

MJ-2509N

www.win-source.net 0086-755-83957316

CUI Devices is now Same Sky! Learn More

MODEL: MJ-2509N | DESCRIPTION: AUDIO JACK

FEATURES

- through-hole design
- low profile

SPECIFICATIONS

parameter	conditions/description	min	typ	max	units
rated input voltage			12		Vdc
rated input current				1	A
contact resistance[1]	between terminal and mating plug between terminal in a closed circuit			30 50	mΩ mΩ
insulation resistance	at 500 Vdc	100			MΩ
voltage withstand	at 0.5 mA, 50/60Hz for 1 minute			500	Vac
insertion/withdrawal force		0.3		2.0	kg
operating temperature		-20		60	°C
storage temperature		-25		70	°C
life	at a rate of 20 to 30 cycles per minute under no load		5,000		cycles
flammability rating	UL94V-0				
RoHS	yes				

Note:
1. When measured at a current of less than 100 mA/1 kHz
2. All specifications measured at 5~35°C, humidity at 45~85%, under standard atmospheric pressure, unless otherwise noted.

SOLDERABILITY

parameter	conditions/description	min	typ	max	units
hand soldering	for 6 seconds			390	°C
wave soldering	dipped in solder pot for 3 ±0.5 seconds	240	245	250	°C

MECHANICAL DRAWING

units: mm
tolerance:
X. ±0.5 mm
X.X ±0.3 mm
X.XX ±0.15 mm

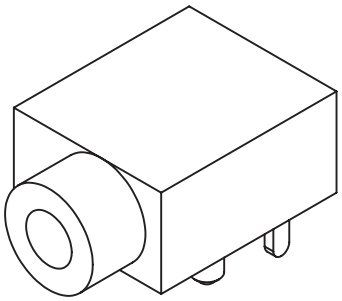

	MATERIAL	PLATING
terminal 1	PBS	tin
terminal 2	brass	tin
terminal 3	PBS	tin
plastic	PBT	

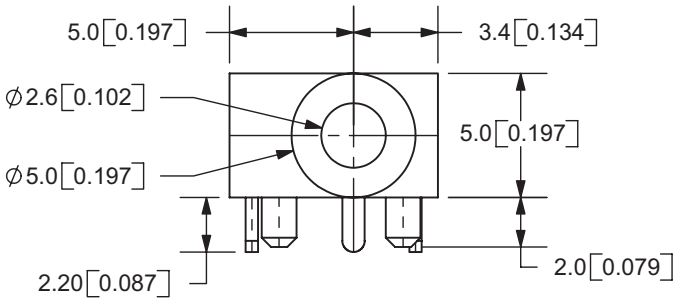

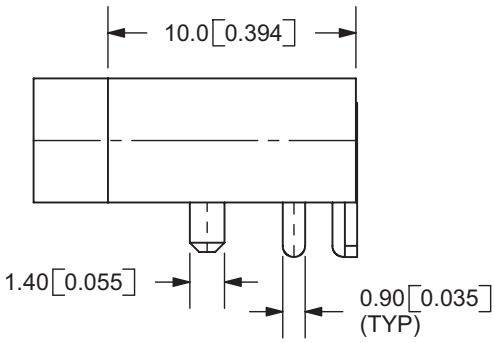

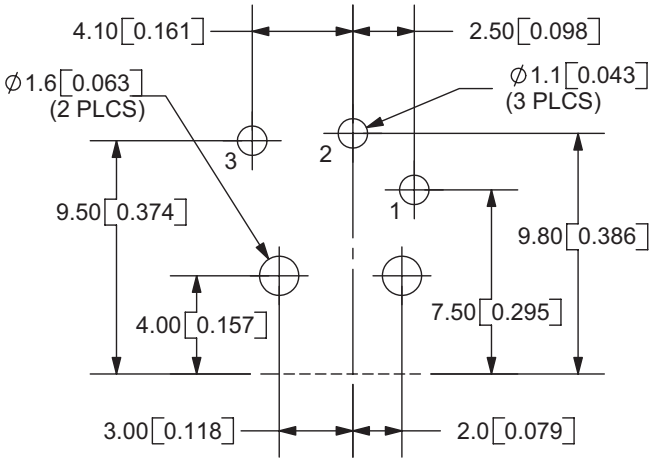

PCB LAYOUT
TOP VIEW

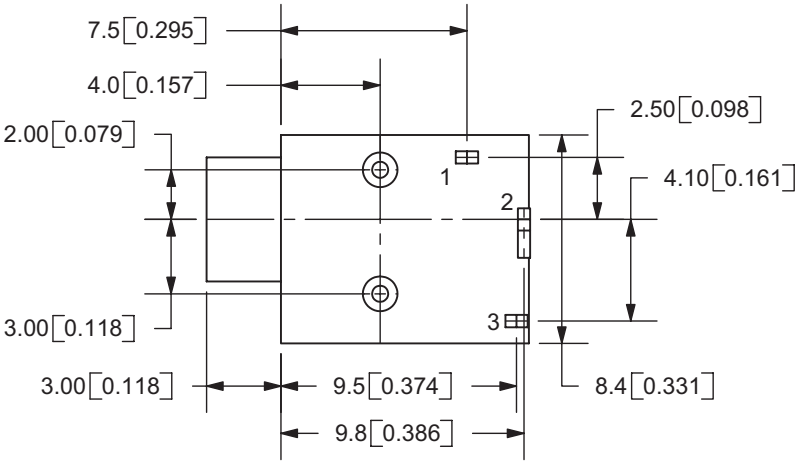

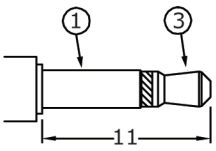

Ø2.5 MATING PLUG

Model No.	MJ-2509N
Schematic	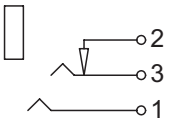
PIN	
1	sleeve
2	tip switch
3	tip

REVISION HISTORY

rev.	description	date
1.0	initial release	11/30/2005
1.01	updated datasheet	02/06/2018
1.02	brand update	10/04/2019
1.03	CUI Devices rebranded to Same Sky	09/12/2024

The revision history provided is for informational purposes only and is believed to be accurate.

Same Sky offers a one (1) year limited warranty. Complete warranty information is listed on our website.

Same Sky reserves the right to make changes to the product at any time without notice. Information provided by Same Sky is believed to be accurate and reliable. However, no responsibility is assumed by Same Sky for its use, nor for any infringements of patents or other rights of third parties which may result from its use.

Same Sky products are not authorized or warranted for use as critical components in equipment that requires an extremely high level of reliability. A critical component is any component of a life support device or system whose failure to perform can be reasonably expected to cause the failure of the life support device or system, or to affect its safety or effectiveness.

Looking for pricing, stock, or lifecycle information?

Click below to explore more details on WIN SOURCE:

- View MJ-2509N on WIN SOURCE
- Same Sky Information

Optimize Your Supply Chain with WIN SOURCE Solutions

- Global Sourcing Solution
- Obsolete Management
- Cost Control Management
- Shortage Management
- Alternative Solution
- Excess Inventory Management