THE DATASHEET OF

74CBTLVD3861BQ,118

www.win-source.net 0086-755-83957316

74CBTLVD3861

10-bit level-shifting bus switch with output enable

Rev. 6 — 24 June 2024 Product data sheet

1. General description

The 74CBTLVD3861 is a 10-bit 3.3 V to 1.8 V level translating bus switch with one output enable ($\overline{OE}$) input. When $\overline{OE}$ is LOW, the switch is closed and port A is connected to the B port. When $\overline{OE}$ is HIGH, the switch is disabled.

To ensure the high-impedance OFF-state during power-up or power-down, $\overline{OE}$ should be tied to the V_{CC} through a pull-up resistor. The minimum value of the resistor is determined by the current-sinking capability of the driver.

Schmitt trigger action at control input makes the circuit tolerant to slower input rise and fall times across the entire V_{CC} range from 3.0 V to 3.6 V.

This device is fully specified for partial power-down applications using I_{OFF}.

2. Features and benefits

- Supply voltage range from 3.0 V to 3.6 V
- High noise immunity
- Complies with JEDEC standard:
  - JESD8-B/JESD36 (3.0 V to 3.6 V)
- 4 Ω switch connection between two ports
- 3.3 V to 1.8 V level translation
- CMOS low power consumption
- Latch-up performance exceeds 250 mA per JESD78B Class I level A
- I_{OFF} circuitry provides partial Power-down mode operation
- ESD protection:
  - HBM: ANSI/ESDA/JEDEC JS-001 class 2 exceeds 2000 V
  - CDM: ANSI/ESDA/JEDEC JS-002 class C3 exceeds 1000 V
- Specified from -40 °C to +85 °C and -40 °C to +125 °C

3. Ordering information

Table 1. Ordering information

Type number	Package			
	Temperature range	Name	Description	Version
74CBTLVD3861PW	-40 °C to +125 °C	TSSOP24	plastic thin shrink small outline package; 24 leads; body width 4.4 mm	SOT355-1
74CBTLVD3861BQ	-40 °C to +125 °C	DHVQFN24	plastic dual in-line compatible thermal enhanced very thin quad flat package; no leads; 24 terminals; body 3.5 × 5.5 × 0.85 mm	SOT815-1

4. Functional diagram

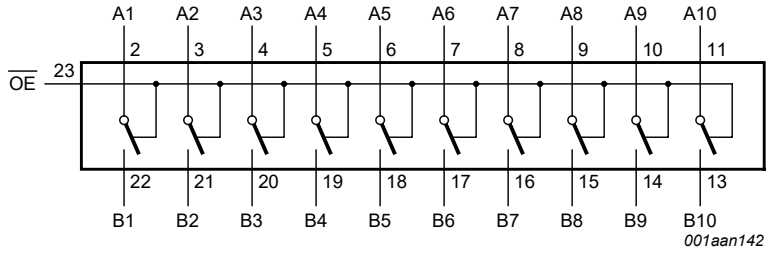

Fig. 1. Logic symbol

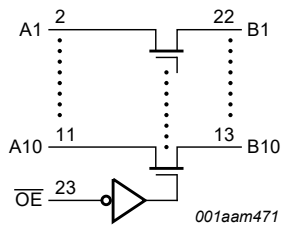

Fig. 2. Logic diagram

5. Pinning information

5.1. Pinning

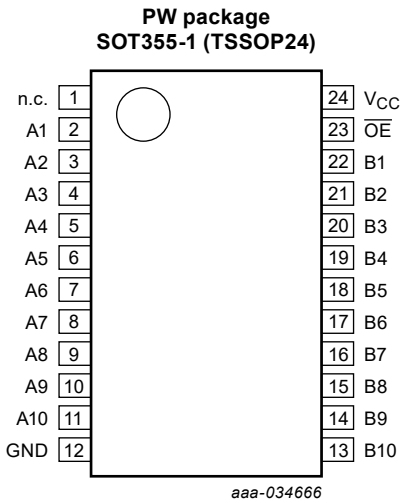

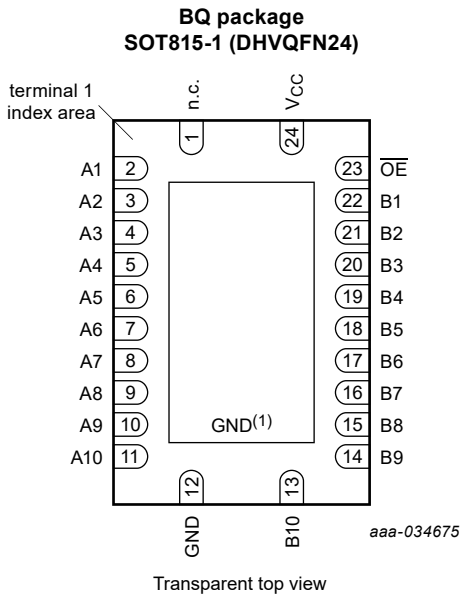

(1) This is not a ground pin. There is no electrical or mechanical requirement to solder the pad. In case soldered, the solder land should remain floating or connected to GND.

5.2. Pin description

Table 2. Pin description

Symbol	Pin	Description
n.c.	1	not connected
A1, A2, A3, A4, A5, A6, A7, A8, A9, A10	2, 3, 4, 5, 6, 7, 8, 9, 10, 11	data input/output (A port)
GND	12	ground (0 V)
B1, B2, B3, B4, B5, B6, B7, B8, B9, B10	22, 21, 20, 19, 18, 17, 16, 15, 14, 13	data input/output (B port)
$\overline{OE}$	23	output enable input (active LOW)
V_{CC}	24	positive supply voltage

All information provided in this document is subject to legal disclaimers.

© Nexperia B.V. 2024. All rights reserved

6. Functional description

Table 3. Function selection

H = HIGH voltage level; L = LOW voltage level; Z = high-impedance OFF-state.

Input	Input/output
$\overline{OE}$	**An, Bn**
L	An = Bn
H	Z

7. Limiting values

Table 4. Limiting values

In accordance with the Absolute Maximum Rating System (IEC 60134). Voltages are referenced to GND (ground = 0 V).

Symbol	Parameter	Conditions		Min	Max	Unit
V_{CC}	supply voltage			-0.5	+4.6	V
V_I	input voltage		[1]	-0.5	+4.6	V
V_{SW}	switch voltage	enable and disable mode	[1]	-0.5	V_{CC} + 0.5	V
I_{IK}	input clamping current	V_I < -0.5 V		-50	-	mA
I_{SK}	switch clamping current	V_I < -0.5 V		-50	-	mA
I_{SW}	switch current	V_{SW} = 0 V to V_{CC}		-	±128	mA
I_{CC}	supply current			-	+100	mA
I_{GND}	ground current			-100	-	mA
T_{stg}	storage temperature			-65	+150	°C
P_{tot}	total power dissipation	T_{amb} = -40 °C to +125 °C	[2]	-	500	mW

[1] The minimum input and output voltage ratings may be exceeded if the input and output current ratings are observed.

[2] For SOT355-1 (TSSOP24) package: P_{tot} derates linearly with 12.4 mW/K above 110 °C.
For SOT815-1 (DHVQFN24) package: P_{tot} derates linearly with 15.0 mW/K above 117 °C.

8. Recommended operating conditions

Table 5. Recommended operating conditions

Symbol	Parameter	Conditions		Min	Max	Unit
V_{CC}	supply voltage			3.0	3.6	V
V_I	input voltage			0	3.6	V
V_{SW}	switch voltage	enable and disable mode		0	V_{CC}	V
T_{amb}	ambient temperature			-40	+125	°C
Δt/ΔV	input transition rise and fall rate	V_{CC} = 3.0 V to 3.6 V	[1]	-	200	ns/V

[1] Applies to control signal levels.

All information provided in this document is subject to legal disclaimers.

© Nexperia B.V. 2024. All rights reserved

9. Static characteristics

Table 6. Static characteristics

At recommended operating conditions voltages are referenced to GND (ground = 0 V).

Symbol	Parameter	Conditions	-40 °C to +85 °C			-40 °C to +125 °C		Unit
			Min	Typ [1]	Max	Min	Max	
V_{IH}	HIGH-level input voltage	V_{CC} = 3.0 V to 3.6 V	2.0	-	-	2.0	-	V
V_{IL}	LOW-level input voltage	V_{CC} = 3.0 V to 3.6 V	-	-	0.9	-	0.9	V
I_I	input leakage current	pin $\overline{OE}$; V_I = GND to V_{CC}; V_{CC} = 3.6 V	-	-	±1	-	±20	μA
V_{pass}	pass voltage	V_I = V_{CC}; see Fig. 5 to Fig. 9	-	-	-	-	-	V
$I_{S(OFF)}$	OFF-state leakage current	V_{CC} = 3.6 V; see Fig. 3	-	-	±1	-	±20	μA
$I_{S(ON)}$	ON-state leakage current	V_{CC} = 3.6 V; see Fig. 4	-	-	±1	-	±20	μA
I_{OFF}	power-off leakage current	V_I or V_O = 0 V to 3.6 V; V_{CC} = 0 V	-	-	±10	-	±50	μA
I_{CC}	supply current	V_I = V_{CC}; I_O = 0 A; V_{CC} = 3.6 V; V_{SW} = GND or V_{CC}	-	-	20	-	50	μA
		V_I = GND; I_O = 0 A; V_{CC} = 3.6 V; V_{SW} = GND or V_{CC}	-	-	100	-	150	μA
ΔI_{CC}	additional supply current	pin $\overline{OE}$; V_I = V_{CC} - 0.6 V; V_{SW} = GND or V_{CC}; V_{CC} = 3.6 V [2]	-	-	300	-	2000	μA
C_I	input capacitance	pin $\overline{OE}$; V_{CC} = 3.3 V; V_I = 0 V to 3.3 V	-	0.9	-	-	-	pF
$C_{S(OFF)}$	OFF-state capacitance	V_{CC} = 3.3 V; V_I = 0 V to 3.3 V	-	2.5	-	-	-	pF
$C_{S(ON)}$	ON-state capacitance	V_{CC} = 3.3 V; V_I = 0 V to 3.3 V	-	9.0	-	-	-	pF

[1] All typical values are measured at T_{amb} = 25 °C.
[2] One input at 3 V, other inputs at V_{CC} or GND.

9.1. Test circuits

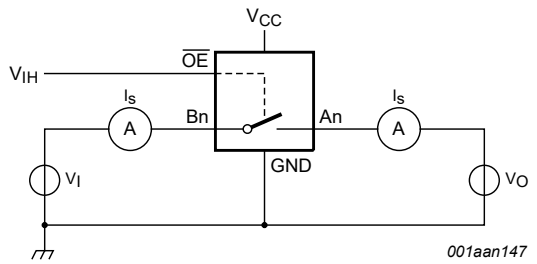

V_I = V_{CC} or GND and V_O = GND or V_{CC}.

Fig. 3. Test circuit for measuring OFF-state leakage current (one switch)

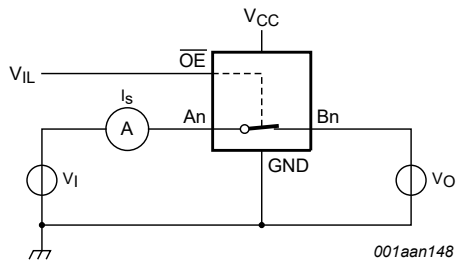

V_I = V_{CC} or GND and V_O = open circuit.

Fig. 4. Test circuit for measuring ON-state leakage current (one switch)

All information provided in this document is subject to legal disclaimers.

© Nexperia B.V. 2024. All rights reserved

9.2. Typical pass voltage graphs

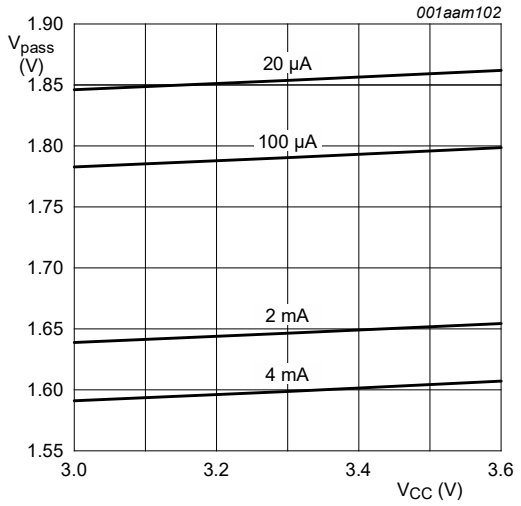

Fig. 5. Pass voltage versus supply voltage; T_{amb} = 125 °C (typical)

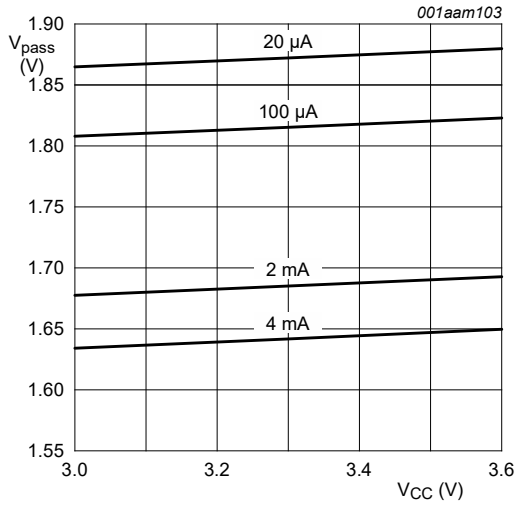

Fig. 6. Pass voltage versus supply voltage; T_{amb} = 85 °C (typical)

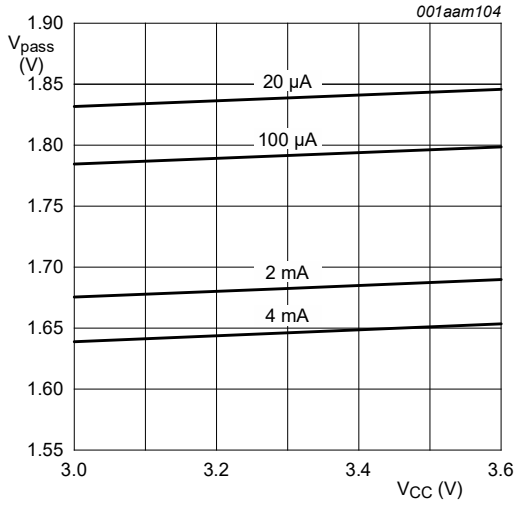

Fig. 7. Pass voltage versus supply voltage; T_{amb} = 25 °C (typical)

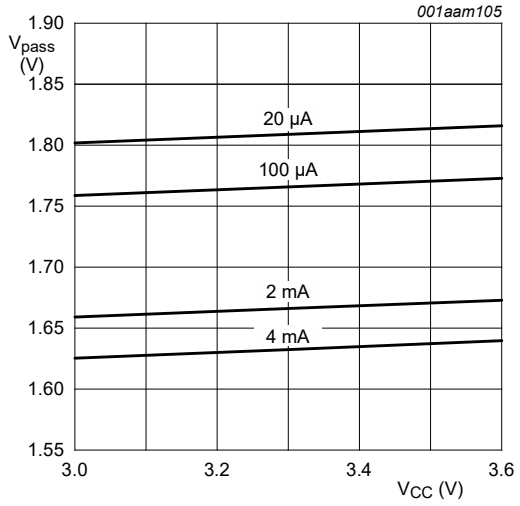

Fig. 8. Pass voltage versus supply voltage; T_{amb} = 0 °C (typical)

All information provided in this document is subject to legal disclaimers.

© Nexperia B.V. 2024. All rights reserved

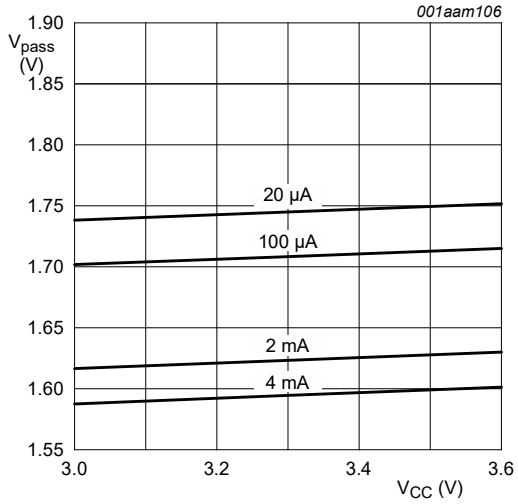

Fig. 9. Pass voltage versus supply voltage; T_{amb} = -40 °C (typical)

9.3. ON resistance

Table 7. Resistance R_{ON}

At recommended operating conditions; voltages are referenced to GND (ground = 0 V); for test circuit see Fig. 10.

Symbol	Parameter	Conditions	-40 °C to +85 °C			-40 °C to +125 °C		Unit
			Min	Typ [1]	Max	Min	Max	
R_{ON}	ON resistance	V_{CC} = 3.0 V to 3.6 V [2]						
		I_{SW} = 64 mA; V_I = 0 V	-	3.7	7.0	-	10.0	Ω
		I_{SW} = 24 mA; V_I = 0 V	-	3.7	7.0	-	10.0	Ω
		I_{SW} = 15 mA; V_I = 1.2 V	-	4.7	10.0	-	12.0	Ω

[1] Typical values are measured at T_{amb} = 25 °C and nominal V_{CC}.

[2] Measured by the voltage drop between the An and Bn terminals at the indicated current through the switch. ON-state resistance is determined by the lower of the voltages of the two (An or Bn) terminals.

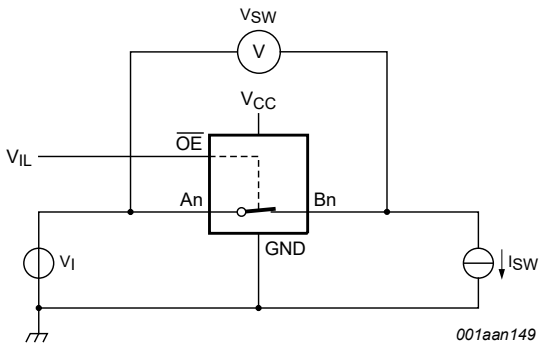

$R_{ON} = V_{SW} / I_{SW}$.

Fig. 10. Test circuit for measuring ON resistance (one switch)

All information provided in this document is subject to legal disclaimers.

© Nexperia B.V. 2024. All rights reserved

10. Dynamic characteristics

Table 8. Dynamic characteristics

GND = 0 V; for test circuit see Fig. 13.

Symbol	Parameter	Conditions		-40 °C to +85 °C			-40 °C to +125 °C		Unit
				Min	Typ [1]	Max	Min	Max	
t_{pd}	propagation delay	An to Bn or Bn to An; V_{CC} = 3.0 V to 3.6 V; see Fig. 11	[2] [3]	-	-	0.11	-	0.22	ns
t_{en}	enable time	$\overline{OE}$ to An or Bn; V_{CC} = 3.0 V to 3.6 V; see Fig. 12	[4]	1.5	2.9	5.0	1.5	6.0	ns
t_{dis}	disable time	$\overline{OE}$ to An or Bn; V_{CC} = 3.0 V to 3.6 V; see Fig. 12	[5]	0.8	3.3	7.0	0.8	8.0	ns

[1] All typical values are measured at T_{amb} = 25 °C and at nominal V_{CC}.
[2] The propagation delay is the calculated RC time constant of the typical on-state resistance of the switch and the load capacitance, when driven by an ideal voltage source (zero output impedance).
[3] t_{pd} is the same as t_{PLH} and t_{PHL}.
[4] t_{en} is the same as t_{PZH} and t_{PZL}.
[5] t_{dis} is the same as t_{PHZ} and t_{PLZ}.

10.1. Waveforms and test circuit

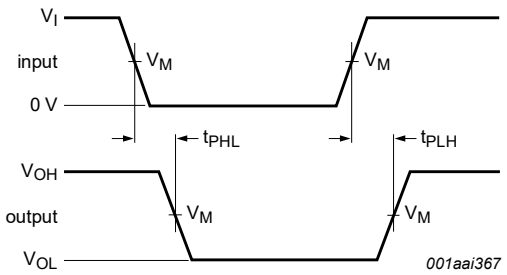

Measurement points are given in Table 9.

Logic levels: V_{OL} and V_{OH} are typical output voltage levels that occur with the output load.

Fig. 11. The data input (An, Bn) to output (Bn, An) propagation delay times

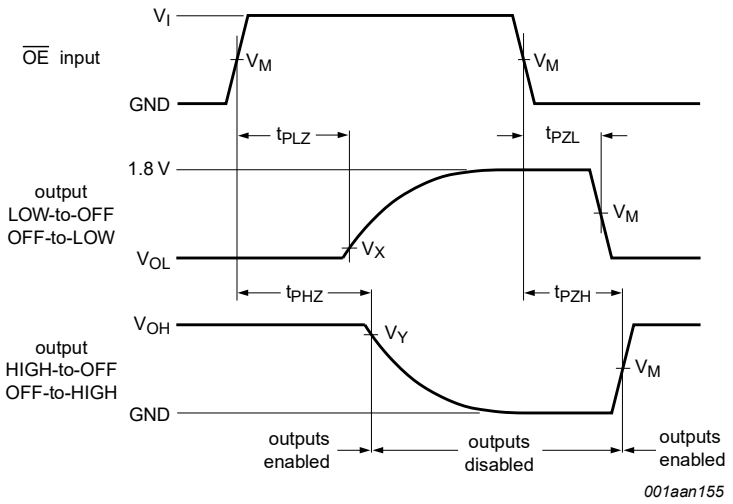

Measurement points are given in Table 9.

Logic levels: V_{OL} and V_{OH} are typical output voltage levels that occur with the output load.

Fig. 12. Enable and disable times

All information provided in this document is subject to legal disclaimers.

© Nexperia B.V. 2024. All rights reserved

Table 9. Measurement points

Supply voltage	Input			Output		
V_{CC}	V_M	V_I	$t_r = t_f$	V_M	V_X	V_Y
3.0 V to 3.6 V	$0.5V_{CC}$	V_{CC}	≤ 2.0 ns	0.9 V	V_{OL} + 0.15 V	V_{OH} - 0.15 V

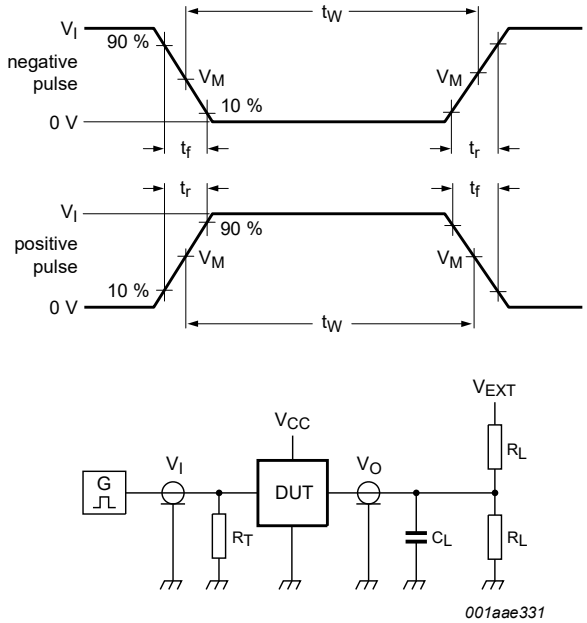

Test data is given in Table 10.

Definitions for test circuit:

R_L = Load resistance;

C_L = Load capacitance including jig and probe capacitance;

R_T = Termination resistance should be equal to the output impedance Z_o of the pulse generator;

V_{EXT} = External voltage for measuring switching times.

Fig. 13. Test circuit for measuring switching times

Table 10. Test data

Supply voltage	Load		V_{EXT}		
V_{CC}	C_L	R_L	t_{PLH}, t_{PHL}	t_{PZH}, t_{PHZ}	t_{PZL}, t_{PLZ}
3.0 V to 3.6 V	30 pF	1 kΩ	open	GND	3.6 V

All information provided in this document is subject to legal disclaimers.

© Nexperia B.V. 2024. All rights reserved

10.2. Additional dynamic characteristics

Table 11. Additional dynamic characteristics

GND = 0 V.

Symbol	Parameter	Conditions		T_{amb} = 25 °C			Unit
				Min	Typ	Max	
$f_{(-3dB)}$	-3 dB frequency response	V_{CC} = 3.3 V; R_L = 50 Ω; see Fig. 14	[1]	-	575	-	MHz

[1] f_i is biased at $0.5V_{CC}$.

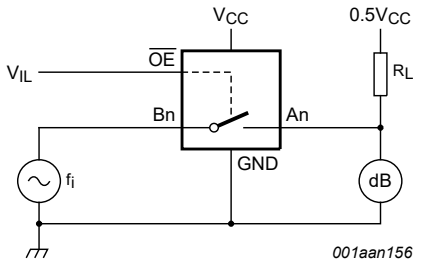

Adjust f_i voltage to obtain 0 dBm level at output. Increase f_i frequency until dB meter reads -3 dB.

Fig. 14. Test circuit for measuring the frequency response when channel is in ON-state

All information provided in this document is subject to legal disclaimers.

© Nexperia B.V. 2024. All rights reserved

11. Package outline

TSSOP24: plastic thin shrink small outline package; 24 leads; body width 4.4 mm **SOT355-1**

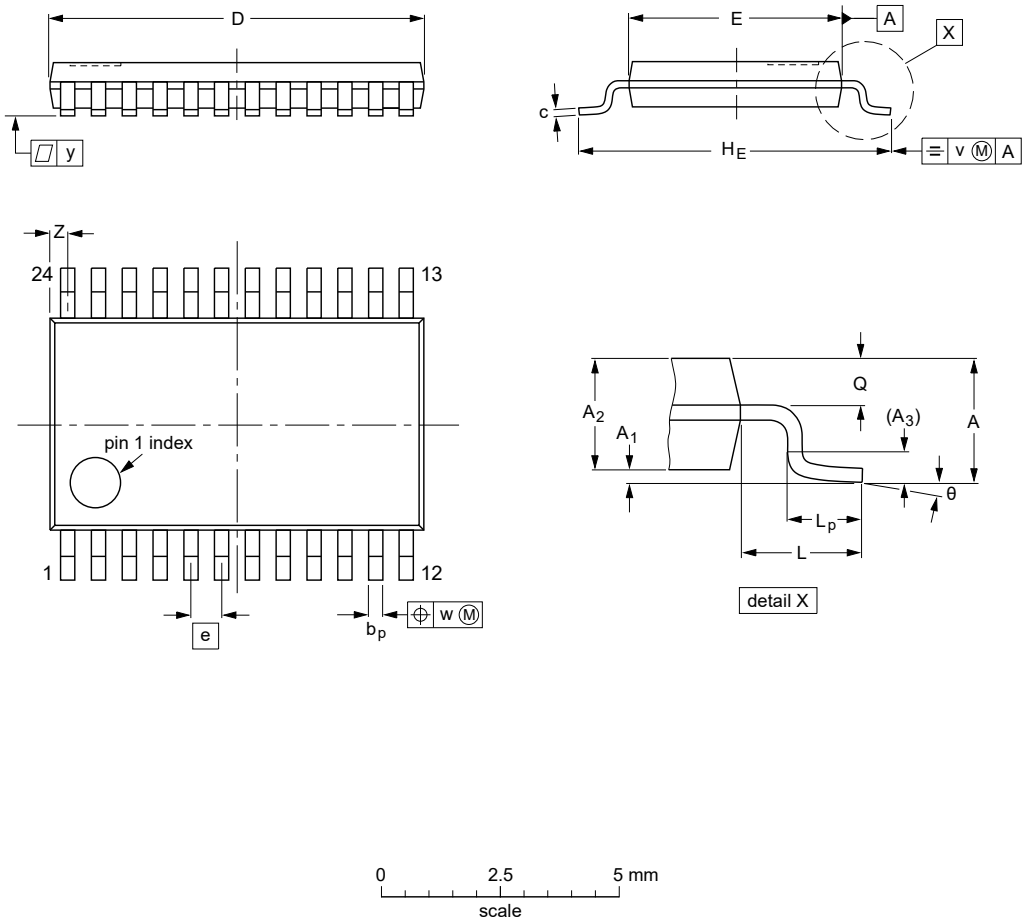

DIMENSIONS (mm are the original dimensions)

UNIT	A max.	A_1	A_2	A_3	b_p	c	D(1)	E(2)	e	H_E	L	L_p	Q	v	w	y	Z(1)	θ
mm	1.1	0.15 0.05	0.95 0.80	0.25	0.30 0.19	0.2 0.1	7.9 7.7	4.5 4.3	0.65	6.6 6.2	1	0.75 0.50	0.4 0.3	0.2	0.13	0.1	0.5 0.2	8° 0°

Notes

1. Plastic or metal protrusions of 0.15 mm maximum per side are not included.
2. Plastic interlead protrusions of 0.25 mm maximum per side are not included.

OUTLINE VERSION	REFERENCES				EUROPEAN PROJECTION	ISSUE DATE
	IEC	JEDEC	JEITA			
SOT355-1		MO-153				~~99-12-27~~ 03-02-19

Fig. 15. Package outline SOT355-1 (TSSOP24)

All information provided in this document is subject to legal disclaimers.

© Nexperia B.V. 2024. All rights reserved

DHVQFN24: plastic dual in-line compatible thermal enhanced very thin quad flat package; no leads; 24 terminals; body 3.5 x 5.5 x 0.85 mm **SOT815-1**

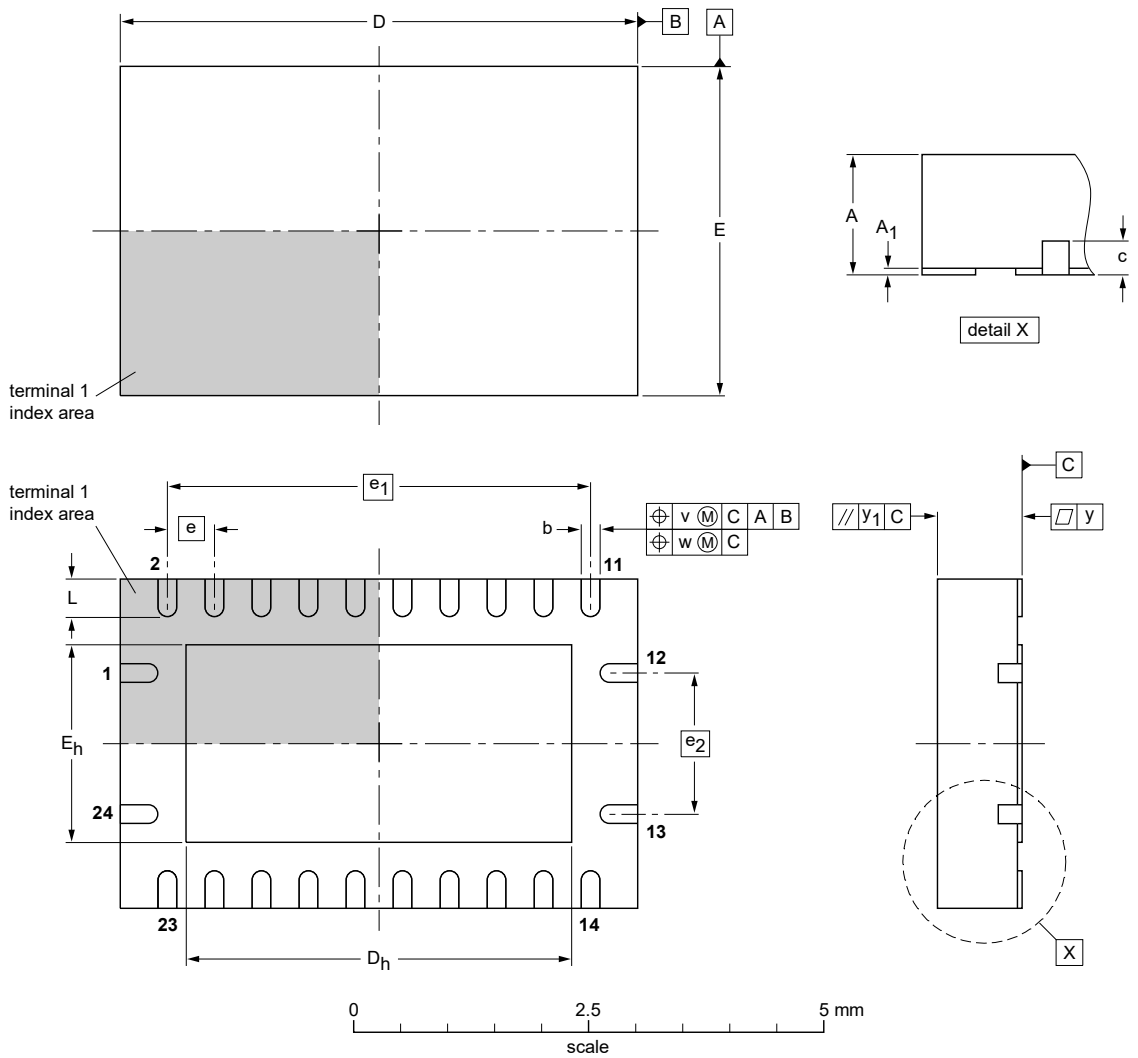

DIMENSIONS (mm are the original dimensions)

UNIT	A(1) max.	A_1	b	c	D(1)	D_h	E(1)	E_h	e	e_1	e_2	L	v	w	y	y_1
mm	1	0.05 0.00	0.30 0.18	0.2	5.6 5.4	4.25 3.95	3.6 3.4	2.25 1.95	0.5	4.5	1.5	0.5 0.3	0.1	0.05	0.05	0.1

Note

1. Plastic or metal protrusions of 0.075 mm maximum per side are not included.

OUTLINE VERSION	REFERENCES				EUROPEAN PROJECTION	ISSUE DATE
	IEC	JEDEC	JEITA			
SOT815-1	- - -	- - -	- - -			03-04-29

Fig. 16. Package outline SOT815-1 (DHVQFN24)

All information provided in this document is subject to legal disclaimers.

© Nexperia B.V. 2024. All rights reserved

12. Abbreviations

Table 12. Abbreviations

Acronym	Description
ANSI	American National Standards Institute
CDM	Charged Device Model
CMOS	Complementary Metal-Oxide Semiconductor
DUT	Device Under Test
ESD	ElectroStatic Discharge
ESDA	ElectroStatic Discharge Association
HBM	Human Body Model
JEDEC	Joint Electron Device Engineering Council

13. Revision history

Table 13. Revision history

Document ID	Release date	Data sheet status	Change notice	Supersedes
74CBTLVD3861 v.6	20240624	Product data sheet	-	74CBTLVD3861 v.5
Modifications:	• Section 2: ESD specification updated according to the latest JEDEC standard. • Section 7: Derating values for P_{tot} total power dissipation updated.			
74CBTLVD3861 v.5	20190418	Product data sheet	-	74CBTLVD3861 v.4
Modifications:	• The format of this data sheet has been redesigned to comply with the identity guidelines of Nexperia. • Legal texts have been adapted to the new company name where appropriate. • Type number 74CBTLVD3861DK (SOT556-1/SSOP24) removed.			
74CBTLVD3861 v.4	20111214	Product data sheet	-	74CBTLVD3861 v.3
Modifications:	• Legal pages updated.			
74CBTLVD3861 v.3	20111020	Product data sheet	-	74CBTLVD3861 v.2
74CBTLVD3861 v.2	20110117	Product data sheet	-	74CBTLVD3861 v.1
74CBTLVD3861 v.1	20101206	Product data sheet	-	-

All information provided in this document is subject to legal disclaimers.

© Nexperia B.V. 2024. All rights reserved

14. Legal information

Data sheet status

Document status [1][2]	Product status [3]	Definition
Objective [short] data sheet	Development	This document contains data from the objective specification for product development.
Preliminary [short] data sheet	Qualification	This document contains data from the preliminary specification.
Product [short] data sheet	Production	This document contains the product specification.

[1] Please consult the most recently issued document before initiating or completing a design.
[2] The term 'short data sheet' is explained in section "Definitions".
[3] The product status of device(s) described in this document may have changed since this document was published and may differ in case of multiple devices. The latest product status information is available on the internet at https://www.nexperia.com.

Definitions

Draft — The document is a draft version only. The content is still under internal review and subject to formal approval, which may result in modifications or additions. Nexperia does not give any representations or warranties as to the accuracy or completeness of information included herein and shall have no liability for the consequences of use of such information.

Short data sheet — A short data sheet is an extract from a full data sheet with the same product type number(s) and title. A short data sheet is intended for quick reference only and should not be relied upon to contain detailed and full information. For detailed and full information see the relevant full data sheet, which is available on request via the local Nexperia sales office. In case of any inconsistency or conflict with the short data sheet, the full data sheet shall prevail.

Product specification — The information and data provided in a Product data sheet shall define the specification of the product as agreed between Nexperia and its customer, unless Nexperia and customer have explicitly agreed otherwise in writing. In no event however, shall an agreement be valid in which the Nexperia product is deemed to offer functions and qualities beyond those described in the Product data sheet.

Disclaimers

Limited warranty and liability — Information in this document is believed to be accurate and reliable. However, Nexperia does not give any representations or warranties, expressed or implied, as to the accuracy or completeness of such information and shall have no liability for the consequences of use of such information. Nexperia takes no responsibility for the content in this document if provided by an information source outside of Nexperia.

In no event shall Nexperia be liable for any indirect, incidental, punitive, special or consequential damages (including - without limitation - lost profits, lost savings, business interruption, costs related to the removal or replacement of any products or rework charges) whether or not such damages are based on tort (including negligence), warranty, breach of contract or any other legal theory.

Notwithstanding any damages that customer might incur for any reason whatsoever, Nexperia's aggregate and cumulative liability towards customer for the products described herein shall be limited in accordance with the Terms and conditions of commercial sale of Nexperia.

Right to make changes — Nexperia reserves the right to make changes to information published in this document, including without limitation specifications and product descriptions, at any time and without notice. This document supersedes and replaces all information supplied prior to the publication hereof.

Suitability for use — Nexperia products are not designed, authorized or warranted to be suitable for use in life support, life-critical or safety-critical systems or equipment, nor in applications where failure or malfunction of an Nexperia product can reasonably be expected to result in personal injury, death or severe property or environmental damage. Nexperia and its suppliers accept no liability for inclusion and/or use of Nexperia products in such equipment or applications and therefore such inclusion and/or use is at the customer's own risk.

Quick reference data — The Quick reference data is an extract of the product data given in the Limiting values and Characteristics sections of this document, and as such is not complete, exhaustive or legally binding.

Applications — Applications that are described herein for any of these products are for illustrative purposes only. Nexperia makes no representation or warranty that such applications will be suitable for the specified use without further testing or modification.

Customers are responsible for the design and operation of their applications and products using Nexperia products, and Nexperia accepts no liability for any assistance with applications or customer product design. It is customer's sole responsibility to determine whether the Nexperia product is suitable and fit for the customer's applications and products planned, as well as for the planned application and use of customer's third party customer(s). Customers should provide appropriate design and operating safeguards to minimize the risks associated with their applications and products.

Nexperia does not accept any liability related to any default, damage, costs or problem which is based on any weakness or default in the customer's applications or products, or the application or use by customer's third party customer(s). Customer is responsible for doing all necessary testing for the customer's applications and products using Nexperia products in order to avoid a default of the applications and the products or of the application or use by customer's third party customer(s). Nexperia does not accept any liability in this respect.

Limiting values — Stress above one or more limiting values (as defined in the Absolute Maximum Ratings System of IEC 60134) will cause permanent damage to the device. Limiting values are stress ratings only and (proper) operation of the device at these or any other conditions above those given in the Recommended operating conditions section (if present) or the Characteristics sections of this document is not warranted. Constant or repeated exposure to limiting values will permanently and irreversibly affect the quality and reliability of the device.

Terms and conditions of commercial sale — Nexperia products are sold subject to the general terms and conditions of commercial sale, as published at http://www.nexperia.com/profile/terms, unless otherwise agreed in a valid written individual agreement. In case an individual agreement is concluded only the terms and conditions of the respective agreement shall apply. Nexperia hereby expressly objects to applying the customer's general terms and conditions with regard to the purchase of Nexperia products by customer.

No offer to sell or license — Nothing in this document may be interpreted or construed as an offer to sell products that is open for acceptance or the grant, conveyance or implication of any license under any copyrights, patents or other industrial or intellectual property rights.

Export control — This document as well as the item(s) described herein may be subject to export control regulations. Export might require a prior authorization from competent authorities.

Non-automotive qualified products — Unless this data sheet expressly states that this specific Nexperia product is automotive qualified, the product is not suitable for automotive use. It is neither qualified nor tested in accordance with automotive testing or application requirements. Nexperia accepts no liability for inclusion and/or use of non-automotive qualified products in automotive equipment or applications.

In the event that customer uses the product for design-in and use in automotive applications to automotive specifications and standards, customer (a) shall use the product without Nexperia's warranty of the product for such automotive applications, use and specifications, and (b) whenever customer uses the product for automotive applications beyond Nexperia's specifications such use shall be solely at customer's own risk, and (c) customer fully indemnifies Nexperia for any liability, damages or failed product claims resulting from customer design and use of the product for automotive applications beyond Nexperia's standard warranty and Nexperia's product specifications.

Translations — A non-English (translated) version of a document is for reference only. The English version shall prevail in case of any discrepancy between the translated and English versions.

Trademarks

Notice: All referenced brands, product names, service names and trademarks are the property of their respective owners.

All information provided in this document is subject to legal disclaimers.

© Nexperia B.V. 2024. All rights reserved

Contents

1. General description.....1
2. Features and benefits.....1
3. Ordering information.....1
4. Functional diagram.....2
5. Pinning information.....2
5.1. Pinning.....2
5.2. Pin description.....2
6. Functional description.....3
7. Limiting values.....3
8. Recommended operating conditions.....3
9. Static characteristics.....4
9.1. Test circuits.....4
9.2. Typical pass voltage graphs.....5
9.3. ON resistance.....6
10. Dynamic characteristics.....7
10.1. Waveforms and test circuit.....7
10.2. Additional dynamic characteristics.....9
11. Package outline.....10
12. Abbreviations.....12
13. Revision history.....12
14. Legal information.....13

© Nexperia B.V. 2024. All rights reserved

For more information, please visit: http://www.nexperia.com
For sales office addresses, please send an email to: salesaddresses@nexperia.com
Date of release: 24 June 2024

Looking for pricing, stock, or lifecycle information?

Click below to explore more details on WIN SOURCE:

- View 74CBTLVD3861BQ,118 on WIN SOURCE
- Nexperia USA Inc. Information

Optimize Your Supply Chain with WIN SOURCE Solutions

- Global Sourcing Solution
- Obsolete Management
- Cost Control Management
- Shortage Management
- Alternative Solution
- Excess Inventory Management