THE DATASHEET OF

E203SD1V3BE

E Series
Sealed Miniature Toggle Switches

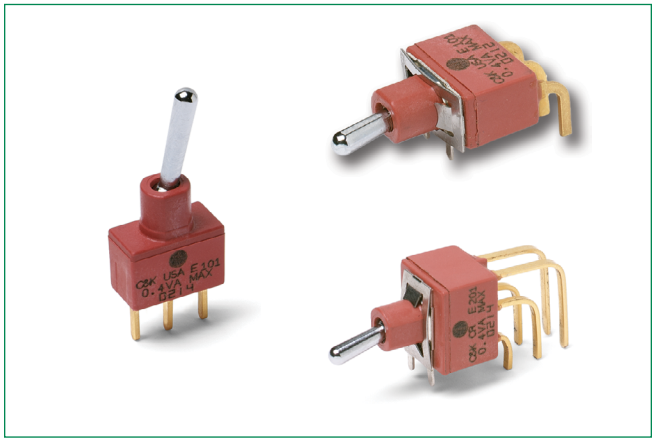

Description

Designers in the medical equipment, instrumentation and telecommunications industries need high-quality, long-lasting switches that can withstand any environment. The E series miniature toggle switches are sealed against solder and cleaning process contaminants – and come with a UL 94V-0 nylon case and bushing, helping to ensure that the products last. ESD protection is available in the E series as well.

Features & Benefits

- Sealed against solder and cleaning process contaminants
- UL 94V-0 Nylon case and bushing
- Multi-positions
- ESD protection available
- RoHS compliant models available

Agency Approvals

Agency	Agency File Number
c UL us	E42363

Applications

- Telecommunications
- Instrumentation
- Medical equipment

Specifications

Contact Rating	B contact material: 0.4 VA max. @ 20 V AC or DC max. Q contact material: E1XX & E2XX models: 7.5 amps @ 125 V AC or 28 V DC; 3 amps @ 250 V AC. E3XX models: 5 amps @ 125 V AC or 28 V DC; 2 amps @ 250 V AC.
Electrical Life	E1XX and E2XX models: 40,000 make-and-break cycles at full load. E3XX models: 30,000 cycles.
Contact Resistance	Below 10 m Ω typ. Initial @ 2-4 V DC, 100 mA, for both silver and gold plated contacts.
Insulation Resistance	10^9 Ω min.
Electrostatic Discharge ESD Option	F1 conductive bushing only. Dissipates up to 20,000 V DC from actuator to ground.
Dielectric Strength	1000 Vrms min. @ sea level.
Operating Temperature	-30°C to 85°C
Solderability	Per MIL-STD-202F method 208D, or EIA RS-186E method 9 (1 hour steam aging).
Degree of Protection	IP57; Protection against harmful dust deposit, full-scale voltage protection, temporary immersion.

Materials

Case & Bushing	Glass filled nylon 6/6, flame retardant, heat stabilized (UL 94V-0). F1 conductive bushing option is impregnated with carbon fibers.
Actuator	Brass, chrome plated with internal o-ring seal standard.
Switch Support	Brass or steel, matte-tin plated.
Switch Support Retainer	Stainless steel
Contact & Terminals	B contact material: Copper alloy, with gold plate over nickel plate. Q contact material: Copper alloy, silver plated.
Terminal Seal	Epoxy
Hardware	Nut & Locking ring: Brass, nickel plated. Lockwasher: Steel, nickel plated.

Notes:
Any models supplied with P, S, R, Q, B or G contact material are RoHS compliant and compatible.
Specifications and materials listed above are for switches with standard options. For information on specific and custom switches, consult Customer Service Center.

© 2026 Littelfuse, Inc.
Specifications are subject to change without notice.
Revised: VL 04/15/26

E Series
Sealed Miniature Toggle Switches

Ordering Number

To order, simply select desired option from each category and place in the appropriate box. Available options are shown and described on pages through 3-9. For additional options not shown in catalog, consult our Customer Service Center. All models are process sealed to withstand machine soldering temperatures and pressure wash cleaning methods.

Exxx - xx - xx - xxx - x - E

Switch Function
E101: SP, On-None-On
E103: SP, On-Off-On
E105: SP, Mom.-Off-Mom.
E201: DP, On-None-On
E203: DP, On-Off-On
E301[1,2]: 3P, On-None-On

Actuator
M: 0.300" high
S: 0.500" high

Bushing
D1: 0.250" high
F1[1]: Conducntive, 0.250" high
D9: 0.280" high
Y[2]: Threaded, 0.350" high

Terminations
A: Right angle, PC thru-hole
AV2: Vertical right angle, PC thru-hole
C: PC Thru-hole
V3: 0.460" high, V-bracket
Z: Solder lug
V9: 1.150" high, V-bracket
V31: 0.460" high, snap-in V-bracket

Contact Material
B: Gold
P: Gold, matte-tin
Q: Silver
S: Silver, matte-tin
G: Gold over silver
R: Gold over silver, matte-tin

Seal
E: Epoxy

Notes:
1. F1 available with SP and DP versions only,
2. Y threaded bushing available for SP and DP versions only.

© 2026 Littelfuse, Inc.
Specifications are subject to change without notice.
Revised: VL 04/15/26

E Series
Sealed Miniature Toggle Switches

Switch Function
SPDT

No. Poles	Model No.	Switch Function			Connected Terminals			Schematic
		POS. 1	POS. 2	POS. 3	POS. 1	POS. 2	POS. 3	
		C&K Marking on Opposite Side						
SP	E101	ON	NONE	ON	2-3	OPEN	2-1	SPDT
	E103	ON	OFF	ON		N/A		2 (COMM) 1 3
	E105	MOM.	OFF	MOM.		N/A		

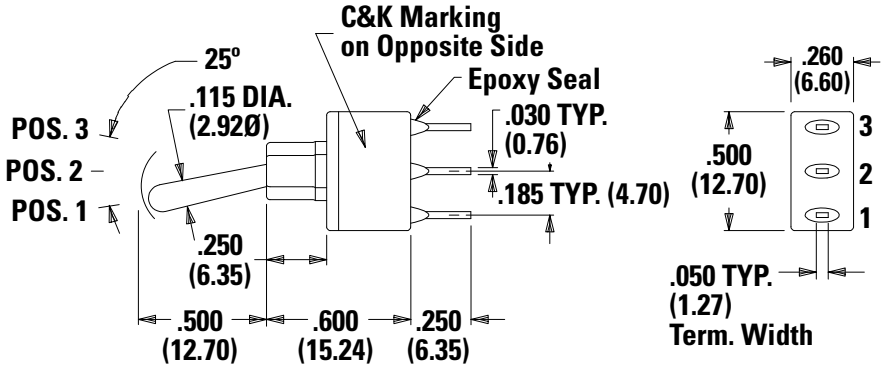

Note: Part number shown: E101SD1CBE

Terminal Numbers For
Reference Only

© 2026 Littelfuse, Inc.
Specifications are subject to change without notice.
Revised: VL 04/15/26

E Series
Sealed Miniature Toggle Switches

DPDT

No. Poles	Model No.	Switch Function POS. 1	Switch Function POS. 2	Switch Function POS. 3	Connected Terminals POS. 1	Connected Terminals POS. 2	Connected Terminals POS. 3	Schematic
		C&K Marking on Opposite Side						
DP	E201	ON	NONE	ON	2-3,5-6	N/A	2-1,5-4	DPDT
	E203	ON	OFF			OPEN		

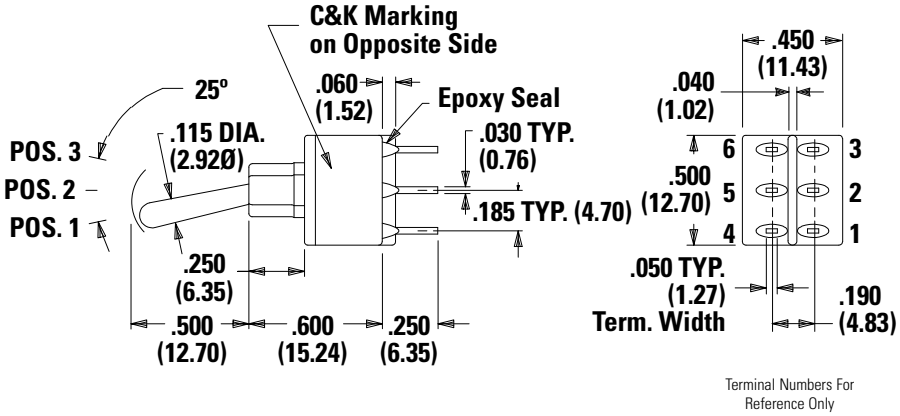

Notes: Part number shown: E201SD1CBE

MOM. = Momentary All models c UL us with all options when ordered with G, R, Q or S contact material.
Wiring for 3-way switch

© 2026 Littelfuse, Inc.
Specifications are subject to change without notice.
Revised: VL 04/15/26

E Series
Sealed Miniature Toggle Switches

3PDT

No. Poles	Model No.	Switch Function			Connected Terminals			Schematic
		POS. 1	POS. 2	POS. 3	POS. 1	POS. 2	POS. 3	
		C&K Marking on Opposite Side						
3P	E301	ON	NONE	ON	2-3,5-6,8-9	N/A	2-1,5-4,8-7	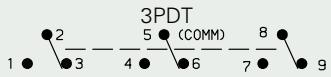

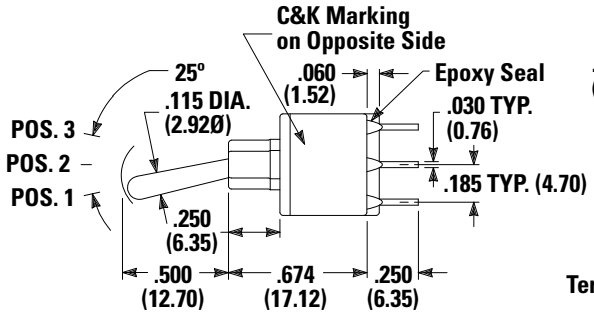

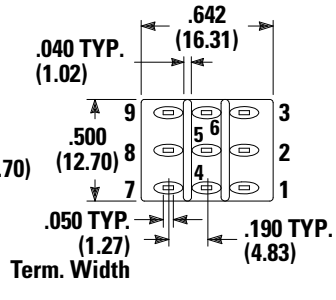

Notes: Part number shown: E301SD1CBE
MOM. = Momentary All models c UL us with all options when ordered with G, R, Q or S contact material.
Wiring for 3-way switch

Terminal Numbers For
Reference Only

Actuator

M 0.300" High

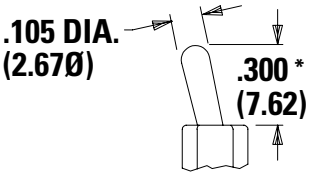

Standard when ordered with
A, A3, AV2, AV3, V2-V61 terminations.
Finish: Chrome.

S 0.500" High

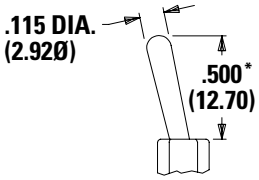

Standard when ordered with
C, Z, Z3, W & W4 terminations.
Finish: Chrome

Notes: Actuators shown with standard D1 bushing. Subtract 0.030 (0.76) for D9 bushing. Subtract 0.100 (2.54) for Y bushing.

Option Code	L3 Actuator Color
2	Black

Note: Other colors available, consult Customer Service Center. No color choice required for S & M actuators.

© 2026 Littelfuse, Inc.
Specifications are subject to change without notice.
Revised: VL 04/15/26

E Series
Sealed Miniature Toggle Switches

Bushing

D1 0.250" High, Unthreaded
F1 ESD Conductive Bushing, 0.250" High, Unthreaded

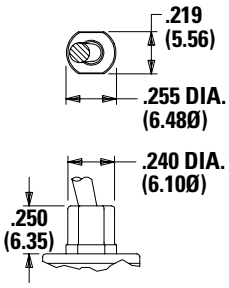

F1 bushing is not UL approved

Notes: ESD protection depends on proper grounding of switch support bracket. F1 conductive bushing option is impregnated with carbon fibers; dissipates electrostatic discharge (ESD) up to 20,000 V from actuator to ground. Available with M & S actuator options and A, A3, AV2, AV3, V3-V61 termination options.

Y Threaded, Insulated, 0.350" High with Keyway

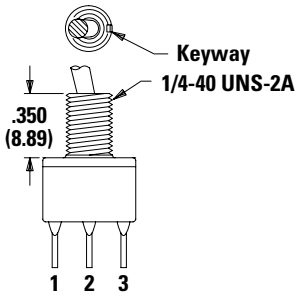

Notes: Available only with C, Z, Z3, & W terminations. Available for 1&2 pole only.
Hardware: One dress nut part number 299D01201,one hex nut part number 540400201 and lockwasher part number 700303202 supplied standard. Will withstand 4 in.-lbs. of torque with no distortion.

D9 0.280" High, Unthreaded

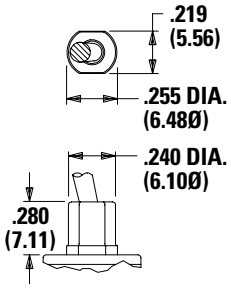

Panel Mounting

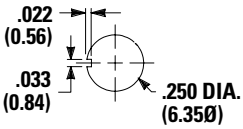

Notes: E3XX models not available with D9 bushing. Internal o-ring actuator seal standard for all bushing options.

© 2026 Littelfuse, Inc.
Specifications are subject to change without notice.
Revised: VL 04/15/26

E Series
Sealed Miniature Toggle Switches

Terminations

Z Solder Lug

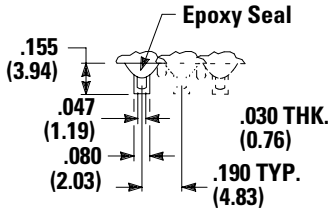

SPDT thru 3PDT

Notes: Not available with F1 conductive bushingor P, R or S contact material.

C PC Thru-hole

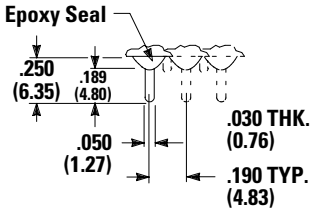

SPDT thru 3PDT

Notes: Not available with F1 conductive bushing.

PC Mounting

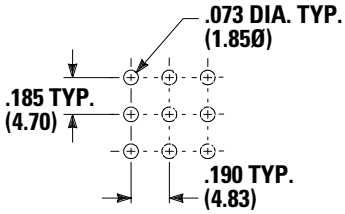

A Right Angle, PC Thru-hole

E101MD1ABE Horizontal Actuation SPDT

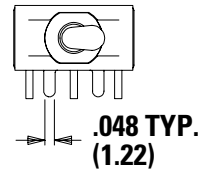

Actuator Shown in Pos. 1

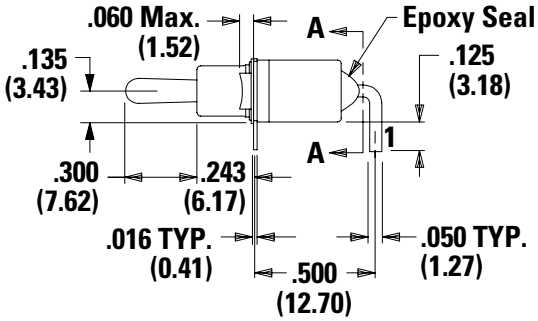

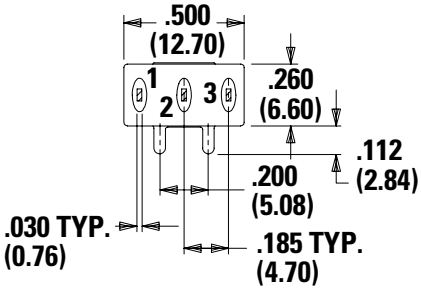

Section A-A

Terminal Numbers For Reference Only

PC Mounting

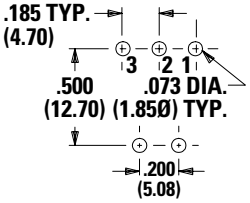

© 2026 Littelfuse, Inc.
Specifications are subject to change without notice.
Revised: VL 04/15/26

E Series
Sealed Miniature Toggle Switches

A Right Angle, PC Thru-hole
E201MD1ABE Horizontal Actuation DPDT

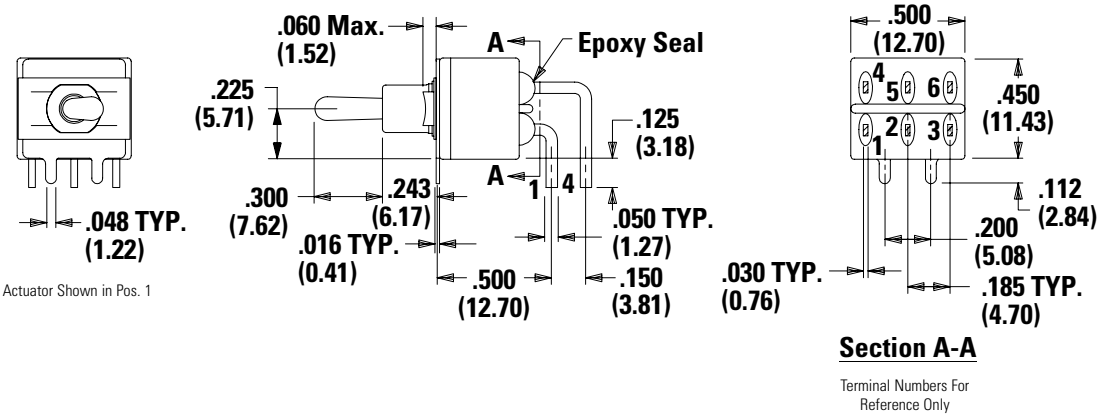

Actuator Shown in Pos. 1

Terminal Numbers For Reference Only

PC Mounting

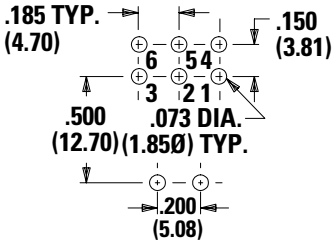

A Right Angle, PC Thru-hole
E301MD1ABE Horizontal Actuation 3PDT

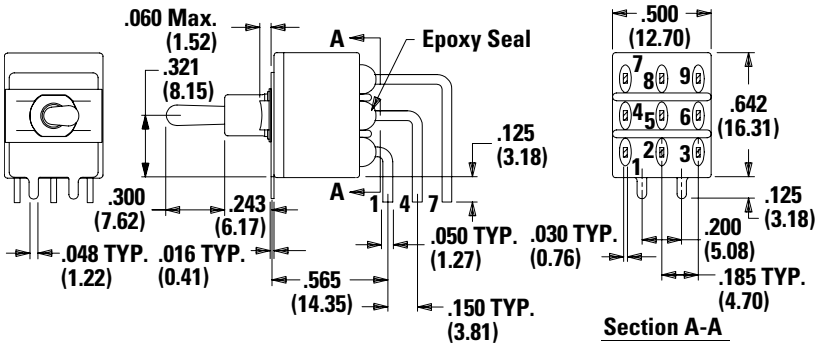

Terminal Numbers For Reference Only

PC Mounting

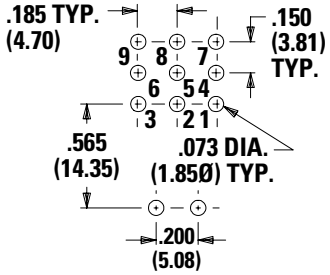

Notes: Not available with D9 & Y bushings. Terminal bend radii and lead-in manufacturing option.

© 2026 Littelfuse, Inc.
Specifications are subject to change without notice.
Revised: VL 04/15/26

AV2 Vertical Right Angle, PC Thru-hole, 0.150" Pitch

E101MD1AV2BE Vertical Actuation SPDT

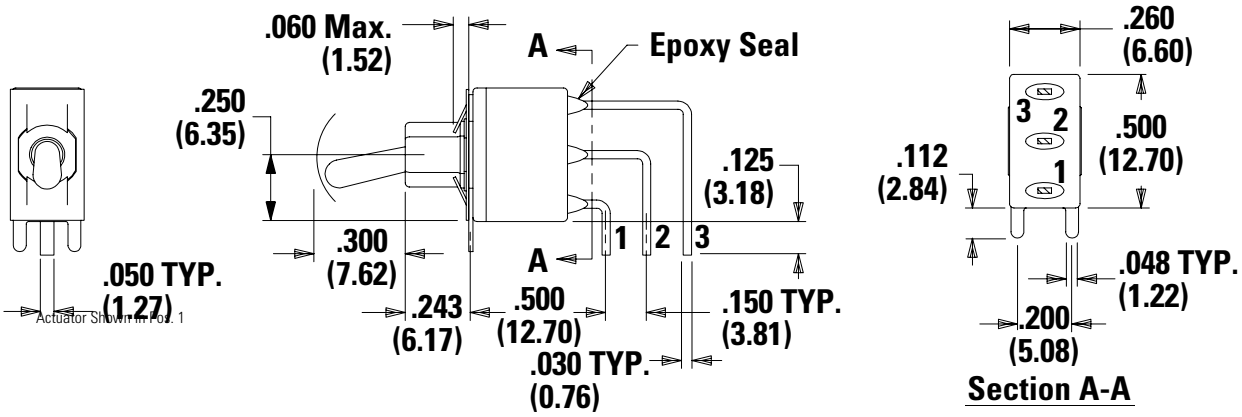

PC Mounting

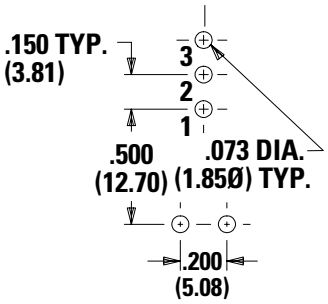

AV2 Vertical Right Angle, PC Thru-hole, 0.150" Pitch

E201MD1AV2BE Vertical Actuation DPDT

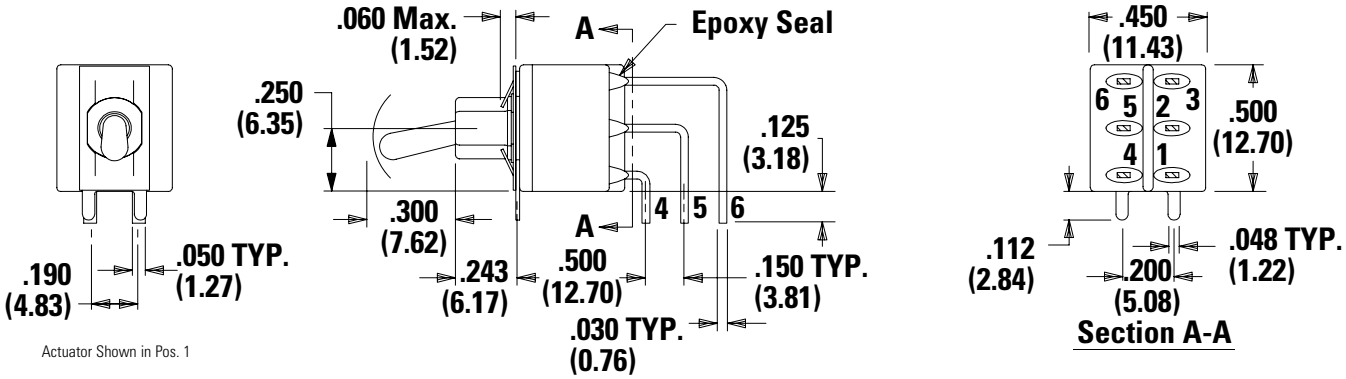

© 2026 Littelfuse, Inc.
Specifications are subject to change without notice.
Revised: VL 04/15/26

E Series
Sealed Miniature Toggle Switches

PC Mounting

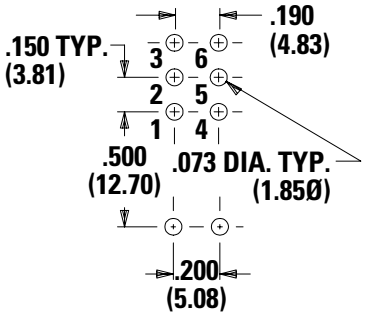

AV2 Vertical Right Angle, PC Thru-hole, .0150" Pitch

E301MD1AV2BE Vertical Actuation 3PDT

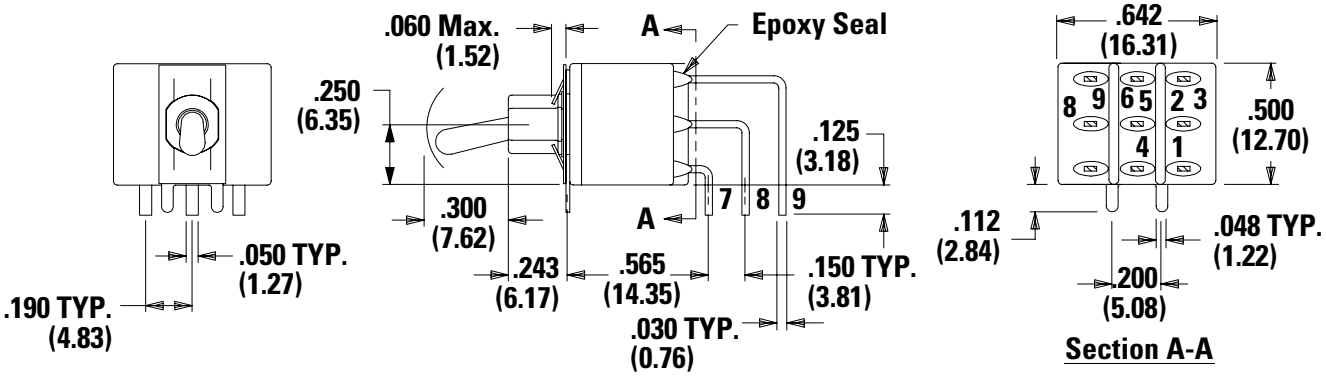

Actuator Shown in Pos. 1

PC Mounting

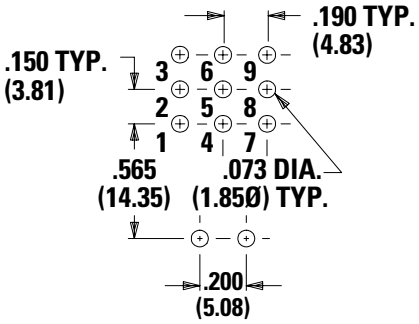

© 2026 Littelfuse, Inc.
Specifications are subject to change without notice.
Revised: VL 04/15/26

E Series
Sealed Miniature Toggle Switches

V3, V9 Vertical Mount, V-Bracket
V31 Vertical Mount, V-Bracket, Snap-in
E101MD1_BE SPDT

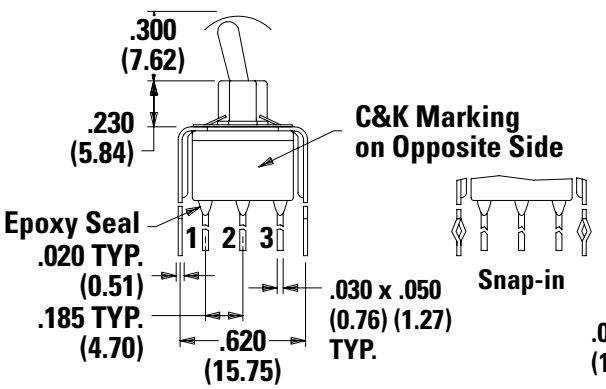

Actuator Shown in POS. 1

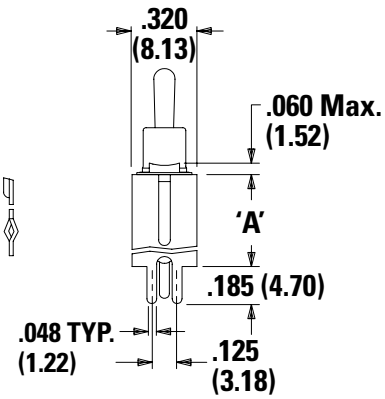

PC Mounting

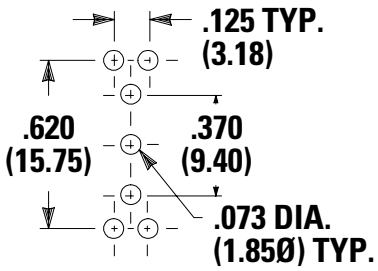

Notes: Not available with Y bushings.

Option Code	DIM 'A'
V3, V31	0.460 (11.68)
V9	1.150 (29.21)

V3, V9 Vertical Mount, V-Bracket
V31 Vertical Mount, V-Bracket, Snap-in
E201MD1_BE DPDT

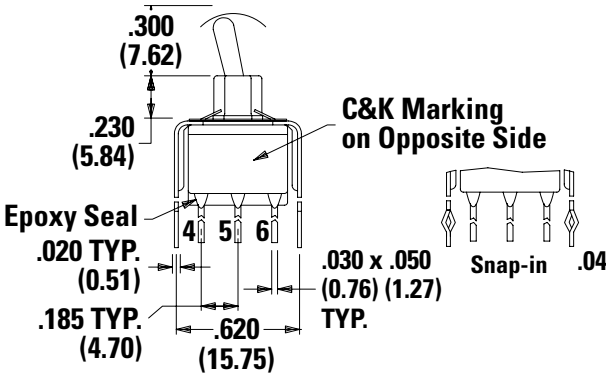

Actuator Shown in POS. 1

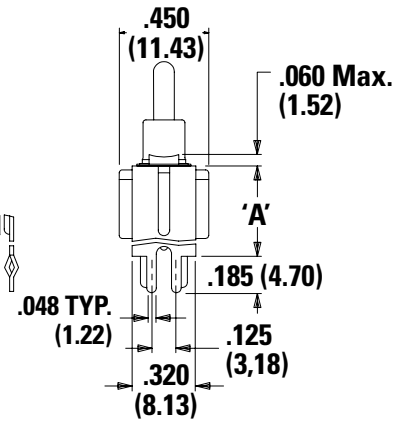

PC Mounting

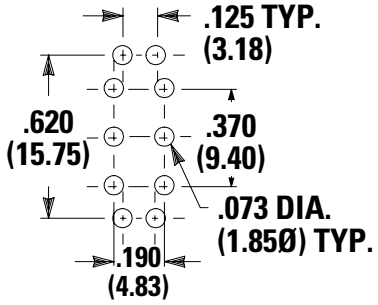

Notes: Not available with Y bushings.

Option Code	DIM 'A'
V3, V31	0.460 (11.68)
V9	1.150 (29.21)

© 2026 Littelfuse, Inc.
Specifications are subject to change without notice.
Revised: VL 04/15/26

E Series
Sealed Miniature Toggle Switches

V9 Vertical Mount, V-Bracket
E301MD1_BE 3PDT

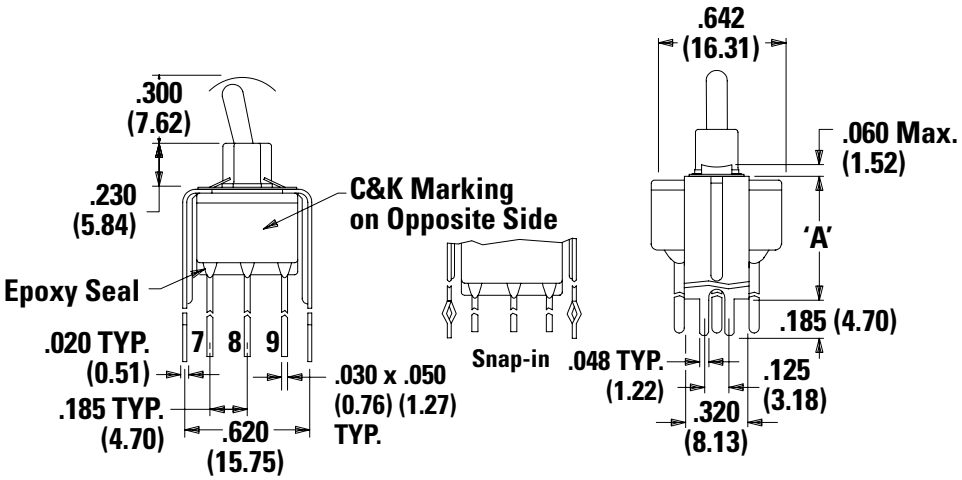

Actuator Shown in POS. 1

Notes: Not available with D9 & Y bushings.

PC Mounting

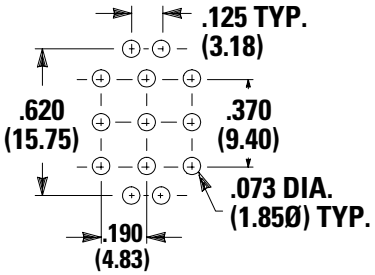

Option Code	DIM 'A'
V9	1.150 (29.21)

Contact Material

Option Code	Contact Material	Terminal Plating	Ratings	
B	Gold[1]	Gold[1]	Low Level / Dry Circuit	0.4 VA max. @ 20 V AC or DC Max.
P		Matte-Tin[6]		
Q	Silver[4,5]	Silver[5]	Power	E1XX & E2XX models: 7.5 amps @ 125 V AC or 28 V DC; 3 amps @ 250 V AC. E3XX models: 5 amps @ 125 V AC or 28 V DC; 2 amps @ 250 V AC.
S		Matte-Tin[6]		
G	Gold over Silver [2,3]	Gold[3]	Low Level / Dry Level Circuit or Power	E1XX and E2XX models: 0.4 VA max. @ 20 V AC or DC max. or 7.5 amps @125 V AC or 28 V DC; 3 amps @ 250 V AC. DC E3XX models: 0.4 VA max. @ 20 V AC or DC max. or 5 amps @125 V AC or 28 V DC; 2 amps @ 250 V AC.
R		Matte-Tin[6]		

Notes: See Technical Data section of this catalog for RoHS compliant and compatible definitions and specifications.
1. Contacts & Terminals: Copper alloy, with gold plate over nickel plate.
2. End Contacts: Coin silver, with gold plate over nickel plate.
3. Center Contacts & All Terminals: Copper alloy, with gold plate over nickel plate.
4. End Contacts: Coin silver, silver plated.
5. Center Contacts & All Terminals: Copper alloy, with gold flash over silver plate. Or copper alloy, silver plated.
6. Terminals: Copper alloy, with matte tin alloy nickel plate.

Notes: Any models supplied with P, S, R, Q, B or G contact material are RoHS compliant.
All models c UL us with all options when ordered with G, S, R, or Q contact material except with F1 conductive bushings.
B contact material standard with all terminations.
P, S & R contact materials not available with Z terminations.

Disclaimer Notice - Information furnished is believed to be accurate and reliable. However, users should independently evaluate the suitability of and test each product selected for their own applications. Littelfuse products are not designed for, and may not be used in, all applications. Read complete Disclaimer Notice at http://www.littelfuse.com/disclaimer-electronics.

© 2026 Littelfuse, Inc.
Specifications are subject to change without notice.
Revised: VL 04/15/26

Looking for pricing, stock, or lifecycle information?

Click below to explore more details on WIN SOURCE:

- View E203SD1V3BE on WIN SOURCE
- C&K Components Information

Optimize Your Supply Chain with WIN SOURCE Solutions

- Global Sourcing Solution
- Obsolete Management
- Cost Control Management
- Shortage Management
- Alternative Solution
- Excess Inventory Management