THE DATASHEET OF

CAT1023WI-45-GT3

www.win-source.net 0086-755-83957316

CAT1021, CAT1022, CAT1023

Supervisory Circuits with EEPROM Serial 2k-bit I²C Manual Reset and Watchdog Timer

ON Semiconductor®

www.onsemi.com

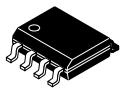

SOIC−8
CASE 751BD

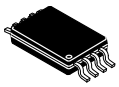

TSSOP−8
CASE 948S

MSOP−8
CASE 846AD

TDFN−8
CASE 511AL

ORDERING INFORMATION

For Ordering Information details, see page 13.

DISCONTINUED
THIS DEVICE IS NOT RECOMMENDED FOR NEW DESIGN
PLEASE CONTACT YOUR onsemi
REPRESENTATIVE FOR INFORMATION

Description

The CAT1021, CAT1022 and CAT1023 are complete memory and supervisory solutions for microcontroller−based systems. A EEPROM Serial 2k−bit I²C memory and a system power supervisor with brown−out protection are integrated together in low power CMOS technology. Memory interface is via a 400 kHz I²C bus.

The CAT1021 and CAT1023 provide a precision V_{CC} sense circuit and two open drain outputs: one (RESET) drives high and the other ($\overline{\text{RESET}}$) drives low whenever V_{CC} falls below the reset threshold voltage. The CAT1022 has only a $\overline{\text{RESET}}$ output and does not have a Write Protect input. The CAT1021 also has a Write Protect input (WP). Write operations are disabled if WP is connected to a logic high.

All supervisors have a 1.6 second watchdog timer circuit that resets a system to a known state if software or a hardware glitch halts or "hangs" the system. For the CAT1021 and CAT1022, the watchdog timer monitors the SDA signal. The CAT1023 has a separate watchdog timer interrupt input pin, WDI.

The power supply monitor and reset circuit protect memory and system controllers during power up/down and against brownout conditions. Five reset threshold voltages support 5 V, 3.3 V and 3 V systems. If power supply voltages are out of tolerance reset signals become active, preventing the system microcontroller, ASIC or peripherals from operating. Reset signals become inactive typically 200 ms after the supply voltage exceeds the reset threshold level. With both active high and low reset signals, interface to microcontrollers and other ICs is simple. In addition, the $\overline{\text{RESET}}$ pin or a separate input, $\overline{\text{MR}}$, can be used as an input for push−button manual reset capability.

The on−chip 2k−bit EEPROM memory features a 16−byte page. In addition, hardware data protection is provided by a V_{CC} sense circuit that prevents writes to memory whenever V_{CC} falls below the reset threshold or until V_{CC} reaches the reset threshold during power up.

Available packages include an surface mount 8−pin SOIC, 8−pin TSSOP, 8−pin TDFN and 8−pin MSOP packages. The TDFN package thickness is 0.8 mm maximum. TDFN footprint options are 3 x 3 mm.

Features

- Precision Power Supply Voltage Monitor
  - 5 V, 3.3 V and 3 V Systems
  - Five Threshold Voltage Options
- Watchdog Timer
- Active High or Low Reset
  - Valid Reset Guaranteed at V_{CC} = 1 V
- 400 kHz I²C Bus
- 2.7 V to 5.5 V Operation
- Low Power CMOS Technology
- 16−Byte Page Write Buffer
- Built−in Inadvertent Write Protection
  - WP Pin (CAT1021)
- 1,000,000 Program/Erase Cycles
- Manual Reset Input
- 100 Year Data Retention
- Industrial and Extended Temperature Ranges
- 8−pin SOIC, TSSOP, MSOP or TDFN (3 x 3 mm Foot−print) Packages
  - TDFN Max Height is 0.8 mm
- These Devices are Pb−Free, Halogen Free/BFR Free and are RoHS Compliant

© Semiconductor Components Industries, LLC, 2011

May, 2024 − Rev. 20

Publication Order Number:
CAT1021/D

Table 1. THRESHOLD VOLTAGE OPTION

Part Dash Number	Minimum Threshold	Maximum Threshold
−45	4.50	4.75
−42	4.25	4.50
−30	3.00	3.15
−28	2.85	3.00
−25	2.55	2.70

BLOCK DIAGRAM

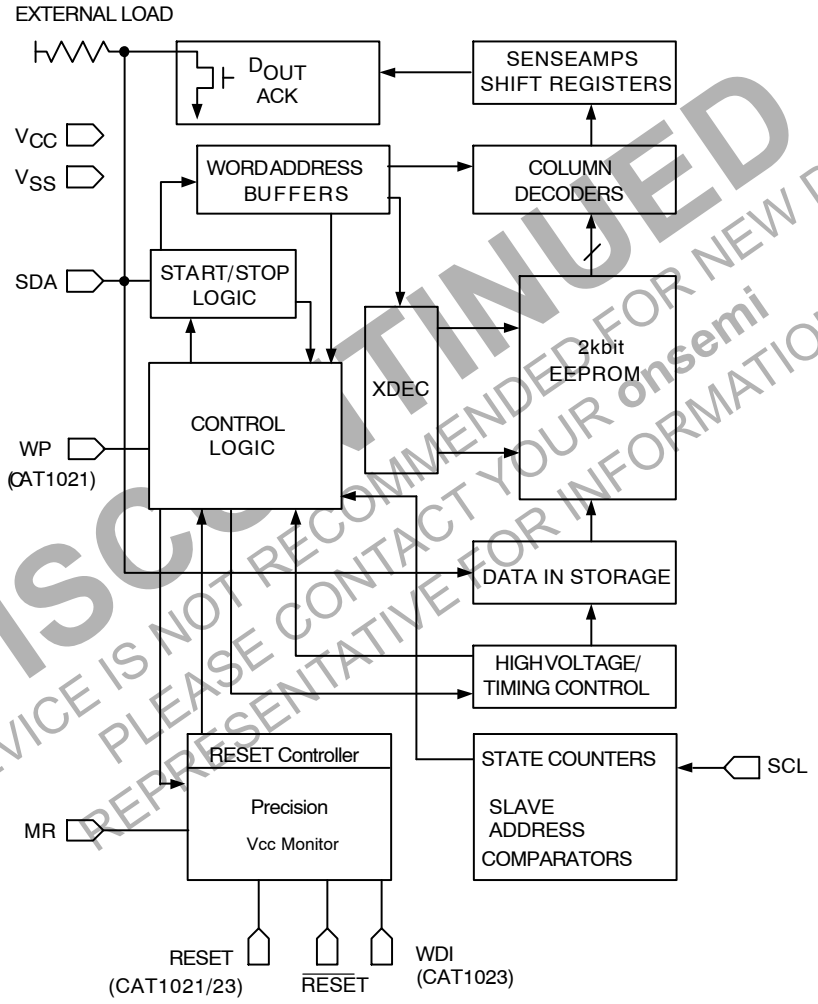

DISCONTINUED
THIS DEVICE IS NOT RECOMMENDED FOR NEW DESIGN
PLEASE CONTACT YOUR onsemi
REPRESENTATIVE FOR INFORMATION

PIN CONFIGURATION

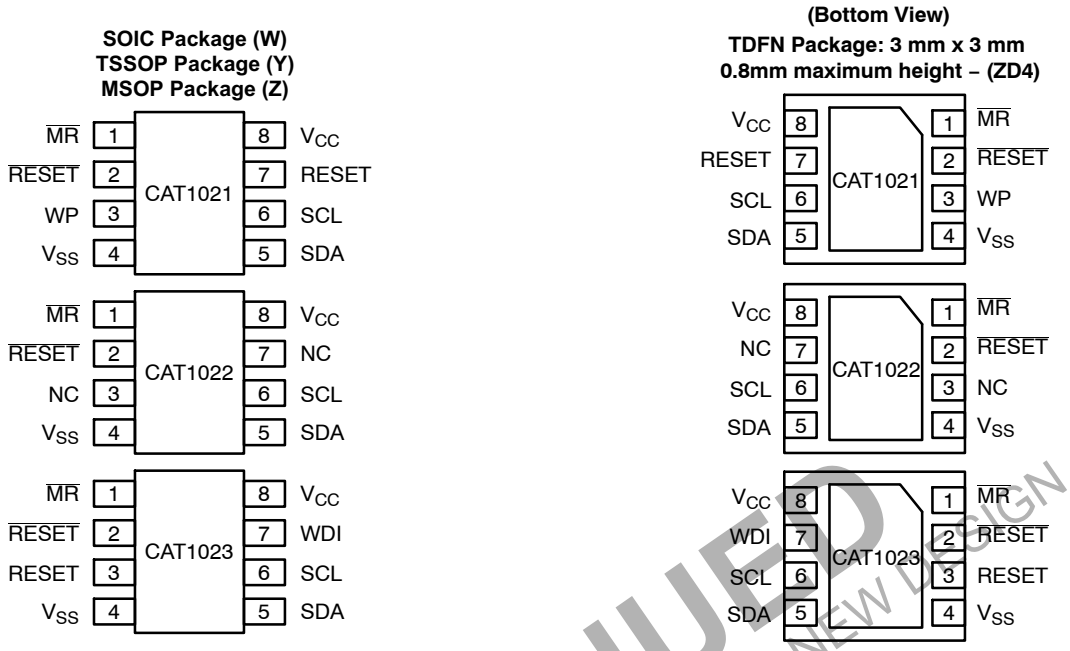

DISCONTINUED
THIS DEVICE IS NOT RECOMMENDED FOR NEW DESIGN
PLEASE CONTACT YOUR onsemi
REPRESENTATIVE FOR INFORMATION

PIN DESCRIPTION

RESET/$\overline{\text{RESET}}$: RESET OUTPUT (RESET CAT1021/23 Only)

These are open drain pins and $\overline{\text{RESET}}$ can be used as a manual reset trigger input. By forcing a reset condition on the pin the device will initiate and maintain a reset condition. The RESET pin must be connected through a pull−down resistor, and the $\overline{\text{RESET}}$ pin must be connected through a pull−up resistor.

SDA: SERIAL DATA ADDRESS

The bidirectional serial data/address pin is used to transfer all data into and out of the device. The SDA pin is an open drain output and can be wire−ORed with other open drain or open collector outputs.

SCL: SERIAL CLOCK

Serial clock input.

$\overline{\text{MR}}$: MANUAL RESET INPUT

Manual Reset input is a debounced input that can be connected to an external source for Manual Reset. Pulling the MR input low will generate a Reset condition. Reset outputs are active while MR input is low and for the reset timeout period after MR returns to high. The input has an internal pull up resistor.

WP (CAT1021 Only): WRITE PROTECT INPUT

When WP input is tied to V_{SS} or left unconnected write operations to the entire array are allowed. When tied to V_{CC}, the entire array is protected. This input has an internal pull down resistor.

WDI (CAT1023 Only): WATCHDOG TIMER INTERRUPT

Watchdog Timer Interrupt Input is used to reset the watchdog timer. If a transition from high to low or low to high does not occur every 1.6 seconds, the RESET outputs will be driven active.

Table 2. PIN FUNCTION

Pin Name	Function
NC	No Connect
$\overline{\text{RESET}}$	Active Low Reset Input/Output
V_{SS}	Ground
SDA	Serial Data/Address
SCL	Clock Input
RESET	Active High Reset Output (CAT1021/23)
V_{CC}	Power Supply
WP	Write Protect (CAT1021 Only)
$\overline{\text{MR}}$	Manual Reset Input
WDI	Watchdog Timer Interrupt (CAT1023)

Table 3. OPERATING TEMPERATURE RANGE

Industrial	−40°C to 85°C
Extended	−40°C to 125°C

Table 4. CAT102X FAMILY OVERVIEW

Device	Manual Reset Input Pin	Watchdog	Watchdog Monitor Pin	Write Protection Pin	Independent Auxiliary Voltage Sense	RESET: Active High and LOW	EEPROM
CAT1021	✓	✓	SDA	✓		✓	2k
CAT1022	✓	✓	SDA				2k
CAT1023	✓	✓	WDI			✓	2k
CAT1024	✓						2k
CAT1025	✓			✓		✓	2k
CAT1026					✓	✓	2k
CAT1027		✓	WDI		✓		2k

NOTE: Device will meet the specifications after thermal equilibrium has been established when mounted in a test socket or printed circuit board with maintained transverse airflow greater than 500 lfpm.

SPECIFICATIONS

Table 5. ABSOLUTE MAXIMUM RATINGS

Parameters	Ratings	Units
Temperature Under Bias	–55 to +125	°C
Storage Temperature	–65 to +150	°C
Voltage on any Pin with Respect to Ground (Note 1)	–2.0 to V_{CC} + 2.0	V
V_{CC} with Respect to Ground	–2.0 to 7.0	V
Package Power Dissipation Capability (T_A = 25°C)	1.0	W
Lead Soldering Temperature (10 s)	300	°C
Output Short Circuit Current (Note 2)	100	mA

Stresses exceeding those listed in the Maximum Ratings table may damage the device. If any of these limits are exceeded, device functionality should not be assumed, damage may occur and reliability may be affected.

1. The minimum DC input voltage is –0.5 V. During transitions, inputs may undershoot to –2.0 V for periods of less than 20 ns. Maximum DC voltage on output pins is V_{CC} +0.5 V, which may overshoot to V_{CC} +2.0 V for periods of less than 20 ns.
2. Output shorted for no more than one second. No more than one output shorted at a time.

DISCONTINUED
THIS DEVICE IS NOT RECOMMENDED FOR NEW DESIGN
PLEASE CONTACT YOUR onsemi
REPRESENTATIVE FOR INFORMATION

Table 6. D.C. OPERATING CHARACTERISTICS

V_{CC} = 2.7 V to 5.5 V and over the recommended temperature conditions unless otherwise specified.

Symbol	Parameter	Test Conditions	Min	Typ	Max	Units
I_{LI}	Input Leakage Current	V_{IN} = GND to V_{CC}	–2		10	μA
I_{LO}	Output Leakage Current	V_{IN} = GND to V_{CC}	–10		10	μA
I_{CC1}	Power Supply Current (Write)	f_{SCL} = 400 kHz V_{CC} = 5.5 V			3	mA
I_{CC2}	Power Supply Current (Read)	f_{SCL} = 400 kHz V_{CC} = 5.5 V			1	mA
I_{SB}	Standby Current	V_{CC} = 5.5 V V_{IN} = GND to V_{CC}			60	μA
V_{IL} (Note 3)	Input Low Voltage		–0.5		0.3 x V_{CC}	V
V_{IH} (Note 3)	Input High Voltage		0.7 x V_{CC}		V_{CC} + 0.5	V
V_{OL}	Output Low Voltage (SDA, $\overline{\text{RESET}}$)	I_{OL} = 3 mA V_{CC} = 2.7 V			0.4	V
V_{OH}	Output High Voltage (RESET)	I_{OH} = –0.4 mA V_{CC} = 2.7 V	V_{CC} – 0.75			V

Table 6. D.C. OPERATING CHARACTERISTICS

V_{CC} = 2.7 V to 5.5 V and over the recommended temperature conditions unless otherwise specified.

Symbol	Parameter	Test Conditions	Min	Typ	Max	Units
V_{TH}	Reset Threshold	CAT102x−45 (V_{CC} = 5.0 V)	4.50		4.75	V
		CAT102x−42 (V_{CC} = 5.0 V)	4.25		4.50	
		CAT102x−30 (V_{CC} = 3.3 V)	3.00		3.15	
		CAT102x−28 (V_{CC} = 3.3 V)	2.85		3.00	
		CAT102x−25 (V_{CC} = 3.0 V)	2.55		2.70	
V_{RVALID}	Reset Output Valid V_{CC} Voltage		1.00			V
V_{RT} (Note 4)	Reset Threshold Hysteresis		15			mV

3. V_{IL} min and V_{IH} max are reference values only and are not tested.
4. This parameter is tested initially and after a design or process change that affects the parameter. Not 100% tested.

Table 7. CAPACITANCE

T_A = 25°C, f = 1.0 MHz, V_{CC} = 5 V

Symbol	Test	Test Conditions	Max	Units
C_{OUT} (Note 5)	Output Capacitance	V_{OUT} = 0 V	8	pF
C_{IN} (Note 5)	Input Capacitance	V_{IN} = 0 V	6	pF

Table 8. AC CHARACTERISTICS

V_{CC} = 2.7 V to 5.5 V and over the recommended temperature conditions, unless otherwise specified.

Memory Read & Write Cycle (Note 6)

Symbol	Parameter	Min	Max	Units
f_{SCL}	Clock Frequency		400	kHz
t_{SP}	Input Filter Spike Suppression (SDA, SCL)		100	ns
t_{LOW}	Clock Low Period	1.3		μs
t_{HIGH}	Clock High Period	0.6		μs
t_R (Note 5)	SDA and SCL Rise Time		300	ns
t_F (Note 5)	SDA and SCL Fall Time		300	ns
$t_{HD; STA}$	Start Condition Hold Time	0.6		μs
$t_{SU; STA}$	Start Condition Setup Time (for a Repeated Start)	0.6		μs
$t_{HD; DAT}$	Data Input Hold Time	0		ns
$t_{SU; DAT}$	Data Input Setup Time	100		ns
$t_{SU; STO}$	Stop Condition Setup Time	0.6		μs
t_{AA}	SCL Low to Data Out Valid		900	ns
t_{DH}	Data Out Hold Time	50		ns
t_{BUF} (Note 5)	Time the Bus must be Free Before a New Transmission Can Start	1.3		μs
t_{WC} (Note 7)	Write Cycle Time (Byte or Page)		5	ms

5. This parameter is characterized initially and after a design or process change that affects the parameter. Not 100% tested.
6. Test Conditions according to “AC Test Conditions” table.
7. The write cycle time is the time from a valid stop condition of a write sequence to the end of the internal program/erase cycle. During the write cycle, the bus interface circuits are disabled, SDA is allowed to remain high and the device does not respond to its slave address.

DISCONTINUED
THIS DEVICE IS NOT RECOMMENDED FOR NEW DESIGN
PLEASE CONTACT YOUR onsemi
REPRESENTATIVE FOR INFORMATION

Table 9. RESET CIRCUIT AC CHARACTERISTICS

Symbol	Parameter	Test Conditions	Min	Typ	Max	Units
t_{PURST}	Power−Up Reset Timeout	Note 2	130	200	270	ms
t_{RDP}	V_{TH} to RESET output Delay	Note 3			5	μs
t_{GLITCH}	V_{CC} Glitch Reject Pulse Width	Notes 4 and 5			30	ns
MR Glitch	Manual Reset Glitch Immunity	Note 1			100	ns
t_{MRW}	MR Pulse Width	Note 1	5			μs
t_{MRD}	MR Input to RESET Output Delay	Note 1			1	μs
t_{WD}	Watchdog Timeout	Note 1	1.0	1.6	2.1	sec

Table 10. POWER−UP TIMING (Notes 5 and 6)

Symbol	Parameter	Test Conditions	Min	Typ	Max	Units
t_{PUR}	Power−Up to Read Operation				270	ms
t_{PUW}	Power−Up to Write Operation				270	ms

Table 11. AC TEST CONDITIONS

Parameter	Test Conditions
Input Pulse Voltages	0.2 x V_{CC} to 0.8 x V_{CC}
Input Rise and Fall Times	10 ns
Input Reference Voltages	0.3 x V_{CC} , 0.7 x V_{CC}
Output Reference Voltages	0.5 x V_{CC}
Output Load	Current Source: I_{OL} = 3 mA; C_L = 100 pF

Table 12. RELIABILITY CHARACTERISTICS

Symbol	Parameter	Reference Test Method	Min	Max	Units
N_{END} (Note 5)	Endurance	MIL−STD−883, Test Method 1033	1,000,000		Cycles/Byte
T_{DR} (Note 5)	Data Retention	MIL−STD−883, Test Method 1008	100		Years
V_{ZAP} (Note 5)	ESD Susceptibility	MIL−STD−883, Test Method 3015	2000		Volts
I_{LTH} (Notes 5 & 7)	Latch−Up	JEDEC Standard 17	100		mA

1. Test Conditions according to “AC Test Conditions” table.
2. Power−up, Input Reference Voltage V_{CC} = V_{TH}, Reset Output Reference Voltage and Load according to “AC Test Conditions” Table
3. Power−Down, Input Reference Voltage V_{CC} = V_{TH}, Reset Output Reference Voltage and Load according to “AC Test Conditions” Table
4. V_{CC} Glitch Reference Voltage = V_{THmin}; Based on characterization data
5. This parameter is characterized initially and after a design or process change that affects the parameter. Not 100% tested.
6. t_{PUR} and t_{PUW} are the delays required from the time V_{CC} is stable until the specified memory operation can be initiated.
7. Latch−up protection is provided for stresses up to 100 mA on input and output pins from −1 V to V_{CC} + 1 V.

DISCONTINUED
THIS DEVICE IS NOT RECOMMENDED FOR NEW DESIGN
PLEASE CONTACT YOUR onsemi
REPRESENTATIVE FOR INFORMATION

DEVICE OPERATON

Reset Controller Description

The CAT1021/22/23 precision RESET controllers ensure correct system operation during brownout and power up/down conditions. They are configured with open drain RESET outputs.

During power−up, the RESET outputs remain active until V_{CC} reaches the V_{TH} threshold and will continue driving the outputs for approximately 200 ms (t_{PURST}) after reaching V_{TH}. After the t_{PURST} timeout interval, the device will cease to drive the reset outputs. At this point the reset outputs will be pulled up or down by their respective pull up/down resistors.

During power−down, the RESET outputs will be active when V_{CC} falls below V_{TH}. The $\overline{\text{RESET}}$ output will be valid so long as V_{CC} is >1.0 V (V_{RVALID}). The device is designed to ignore the fast negative going V_{CC} transient pulses (glitches).

Reset output timing is shown in Figure 1.

Manual Reset Operation

The $\overline{\text{RESET}}$ pin can operate as reset output and manual reset input. The input is edge triggered; that is, the $\overline{\text{RESET}}$ input will initiate a reset timeout after detecting a high to low transition.

When $\overline{\text{RESET}}$ I/O is driven to the active state, the 200 ms timer will begin to time the reset interval. If external reset is shorter than 200 ms, Reset outputs will remain active at least 200 ms.

The CAT1021/22/23 also have a separate manual reset input. Driving the $\overline{\text{MR}}$ input low by connecting a pushbutton (normally open) from $\overline{\text{MR}}$ pin to GND will generate a reset condition. The input has an internal pull up resistor.

Reset remains asserted while $\overline{\text{MR}}$ is low and for the Reset Timeout period after $\overline{\text{MR}}$ input has gone high.

Glitches shorter than 100 ns on $\overline{\text{MR}}$ input will not generate a reset pulse. No external debouncing circuits are required. Manual reset operation using $\overline{\text{MR}}$ input is shown in Figure 2.

Hardware Data Protection

The CAT1021/22/23 supervisors have been designed to solve many of the data corruption issues that have long been associated with serial EEPROMs. Data corruption occurs when incorrect data is stored in a memory location which is assumed to hold correct data.

Whenever the device is in a Reset condition, the embedded EEPROM is disabled for all operations, including write operations. If the Reset output(s) are active, in progress communications to the EEPROM are aborted and no new communications are allowed. In this condition an internal write cycle to the memory can not be started, but an in progress internal nonvolatile memory write cycle can not be aborted. An internal write cycle initiated before the Reset condition can be successfully finished if there is enough time (5ms) before V_{CC} reaches the minimum value of 2V.

In addition, the CAT1021 includes a Write Protection Input which when tied to V_{CC} will disable any write operations to the device.

Watchdog Timer

The Watchdog Timer provides an independent protection for microcontrollers. During a system failure, CAT1021/22/23 devices will provide a reset signal after a time−out interval of 1.6 seconds for a lack of activity. The CAT1023 is designed with the Watchdog timer feature on the WDI pin. The CAT1021 and CAT1022 monitor the SDA line. If WDI or SDA does not toggle within a 1.6 second interval, the reset condition will be generated on the reset outputs. The watchdog timer is cleared by any transition on a monitored line.

As long as reset signal is asserted, the watchdog timer will not count and will stay cleared.

DISCONTINUED
THIS DEVICE IS NOT RECOMMENDED FOR NEW DESIGN
PLEASE CONTACT YOUR onsemi
REPRESENTATIVE FOR INFORMATION

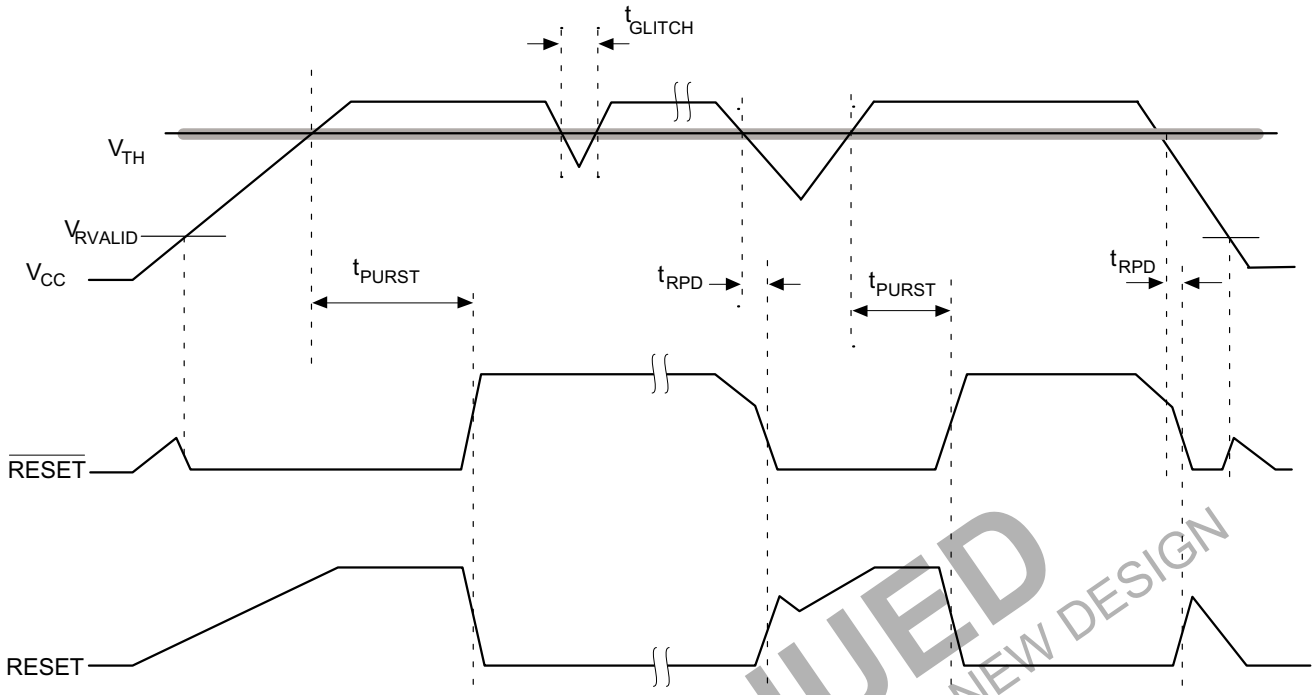

Figure 1. RESET Output Timing

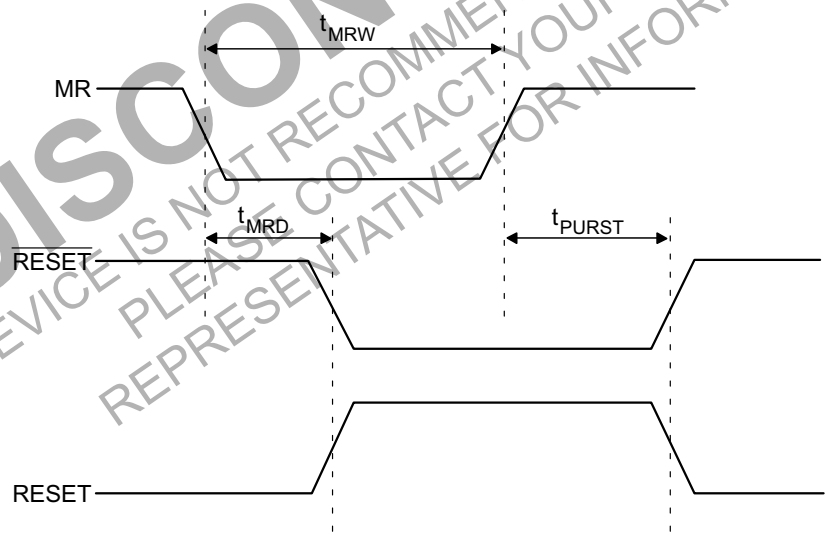

Figure 2. $\overline{\text{MR}}$ Operation and Timing

DISCONTINUED
THIS DEVICE IS NOT RECOMMENDED FOR NEW DESIGN
PLEASE CONTACT YOUR onsemi
REPRESENTATIVE FOR INFORMATION

EMBEDDED EEPROM OPERATON

The CAT1021/22/23 feature a 2−kbit embedded serial EEPROM that supports the I^{2}C Bus data transmission protocol. This Inter−Integrated Circuit Bus protocol defines any device that sends data to the bus to be a transmitter and any device receiving data to be a receiver. The transfer is controlled by the Master device which generates the serial clock and all START and STOP conditions for bus access. Both the Master device and Slave device can operate as either transmitter or receiver, but the Master device controls which mode is activated.

I^{2}C Bus Protocol

The features of the I^{2}C bus protocol are defined as follows:

1. Data transfer may be initiated only when the bus is not busy.
2. During a data transfer, the data line must remain stable whenever the clock line is high. Any changes in the data line while the clock line is high will be interpreted as a START or STOP condition.

Start Condition

The START Condition precedes all commands to the device, and is defined as a HIGH to LOW transition of SDA when SCL is HIGH. The CAT1021/22/23 monitor the SDA and SCL lines and will not respond until this condition is met.

Stop Condition

A LOW to HIGH transition of SDA when SCL is HIGH determines the STOP condition. All operations must end with a STOP condition.

DEVICE ADDRESSING

The Master begins a transmission by sending a START condition. The Master sends the address of the particular slave device it is requesting. The four most significant bits of the 8−bit slave address are programmable in metal and the default is 1010.

The last bit of the slave address specifies whether a Read or Write operation is to be performed. When this bit is set to 1, a Read operation is selected, and when set to 0, a Write operation is selected.

After the Master sends a START condition and the slave address byte, the CAT1021/22/23 monitors the bus and responds with an acknowledge (on the SDA line) when its address matches the transmitted slave address. The CAT1021/22/23 then perform a Read or Write operation depending on the R/$\overline{W}$ bit.

DISCONTINUED
THIS DEVICE IS NOT RECOMMENDED FOR NEW DESIGN
PLEASE CONTACT YOUR onsemi
REPRESENTATIVE FOR INFORMATION

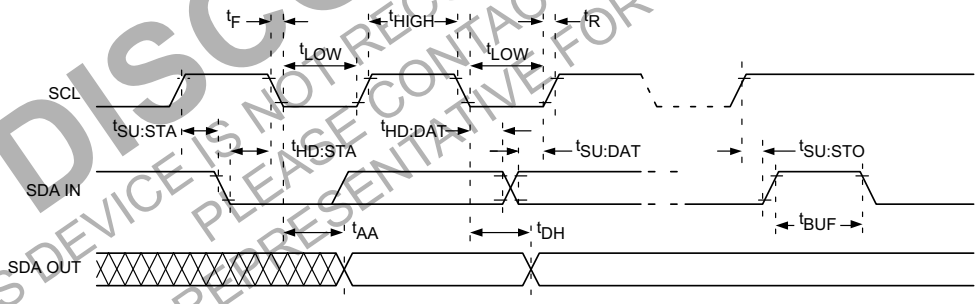

Figure 3. Bus Timing

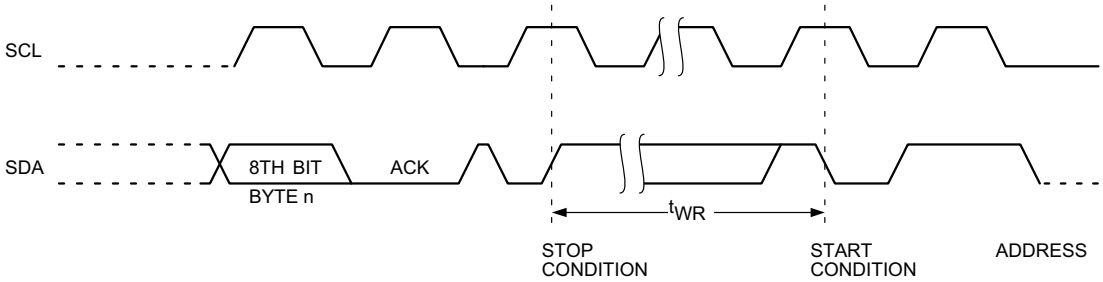

Figure 4. Write Cycle Timing

ACKNOWLEDGE

After a successful data transfer, each receiving device is required to generate an acknowledge. The acknowledging device pulls down the SDA line during the ninth clock cycle, signaling that it received the 8 bits of data.

All devices respond with an acknowledge after receiving a START condition and its slave address. If the device has been selected along with a write operation, it responds with an acknowledge after receiving each 8−bit byte.

When a device begins a READ mode it transmits 8 bits of data, releases the SDA line and monitors the line for an acknowledge. Once it receives this acknowledge, the device will continue to transmit data. If no acknowledge is sent by the Master, the device terminates data transmission and waits for a STOP condition.

WRITE OPERATIONS

Byte Write

In the Byte Write mode, the Master device sends the START condition and the slave address information (with the R/$\overline{W}$ bit set to zero) to the Slave device. After the Slave generates an acknowledge, the Master sends a 8−bit address that is to be written into the address pointers of the device. After receiving another acknowledge from the Slave, the Master device transmits the data to be written into the addressed memory location. The device acknowledges once more and the Master generates the STOP condition. At this time, the device begins an internal programming cycle to non−volatile memory. While the cycle is in progress, the device will not respond to any request from the Master device.

DISCONTINUED
THIS DEVICE IS NOT RECOMMENDED FOR NEW DESIGN
PLEASE CONTACT YOUR onsemi
REPRESENTATIVE FOR INFORMATION

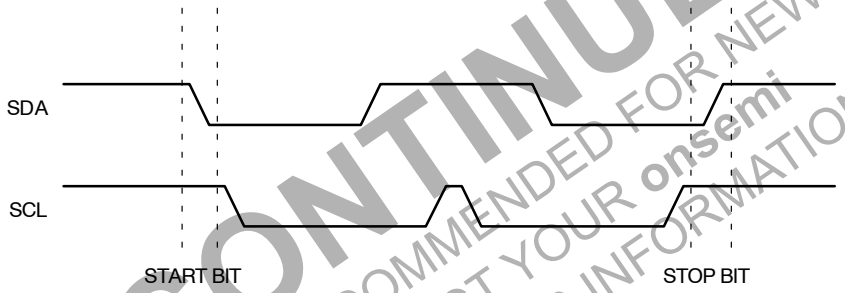

Figure 5. Start/Stop Timing

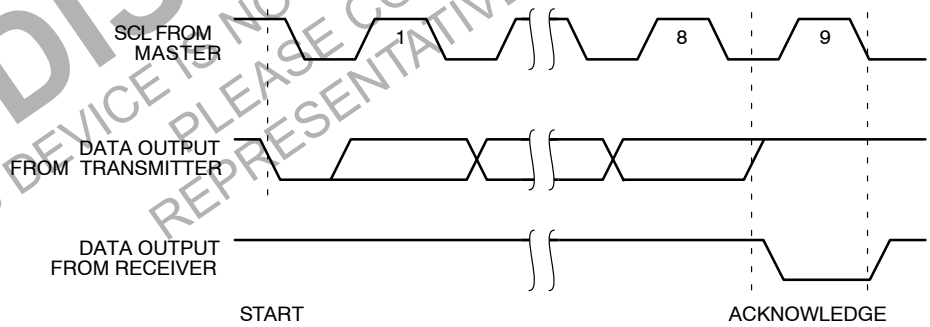

Figure 6. Acknowledge Timing

Default Configuration	1	0	1	0	0	0	0	R/$\overline{W}$

Figure 7. Slave Address Bits

Page Write

The CAT1021/22/23 writes up to 16 bytes of data in a single write cycle, using the Page Write operation. The page write operation is initiated in the same manner as the byte write operation, however instead of terminating after the initial byte is transmitted, the Master is allowed to send up to 15 additional bytes. After each byte has been transmitted, the CAT1021/22/23 will respond with an acknowledge and internally increment the lower order address bits by one. The high order bits remain unchanged.

If the Master transmits more than 16 bytes before sending the STOP condition, the address counter 'wraps around,' and previously transmitted data will be overwritten.

When all 16 bytes are received, and the STOP condition has been sent by the Master, the internal programming cycle begins. At this point, all received data is written to the CAT1021/22/23 in a single write cycle.

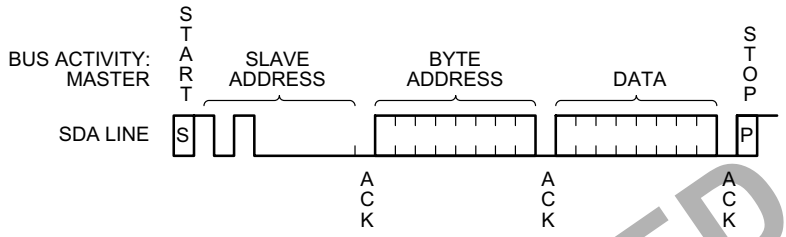

Figure 8. Byte Write Timing

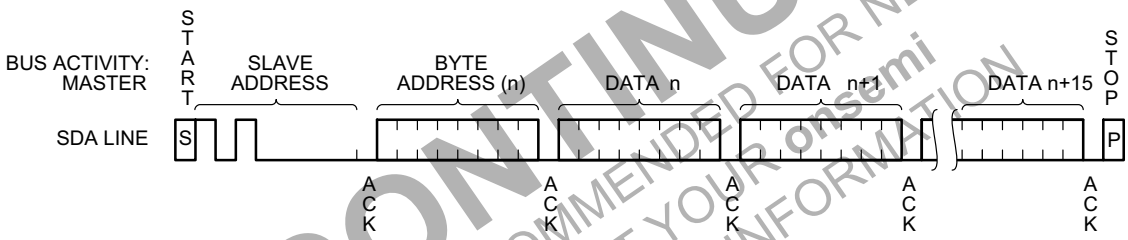

Figure 9. Page Write Timing

DISCONTINUED
THIS DEVICE IS NOT RECOMMENDED FOR NEW DESIGN
PLEASE CONTACT YOUR onsemi
REPRESENTATIVE FOR INFORMATION

Acknowledge Polling

Disabling of the inputs can be used to take advantage of the typical write cycle time. Once the stop condition is issued to indicate the end of the host's write opration, the CAT1021/22/23 initiates the internal write cycle. ACK polling can be initiated immediately. This involves issuing the start condition followed by the slave address for a write operation. If the device is still busy with the write operation, no ACK will be returned. If a write operation has completed, an ACK will be returned and the host can then proceed with the next read or write operation.

WRITE PROTECTION PIN (WP)

The Write Protection feature (CAT1021 only) allows the user to protect against inadvertent memory array programming. If the WP pin is tied to V_{CC}, the entire memory array is protected and becomes read only. The CAT1021 will accept both slave and byte addresses, but the memory location accessed is protected from programming by the device's failure to send an acknowledge after the first byte of data is received.

READ OPERATIONS

The READ operation for the CAT1021/22/23 is initiated in the same manner as the write operation with one exception, the R/$\overline{W}$ bit is set to one. Three different READ operations are possible: Immediate/Current Address READ, Selective/Random READ and Sequential READ.

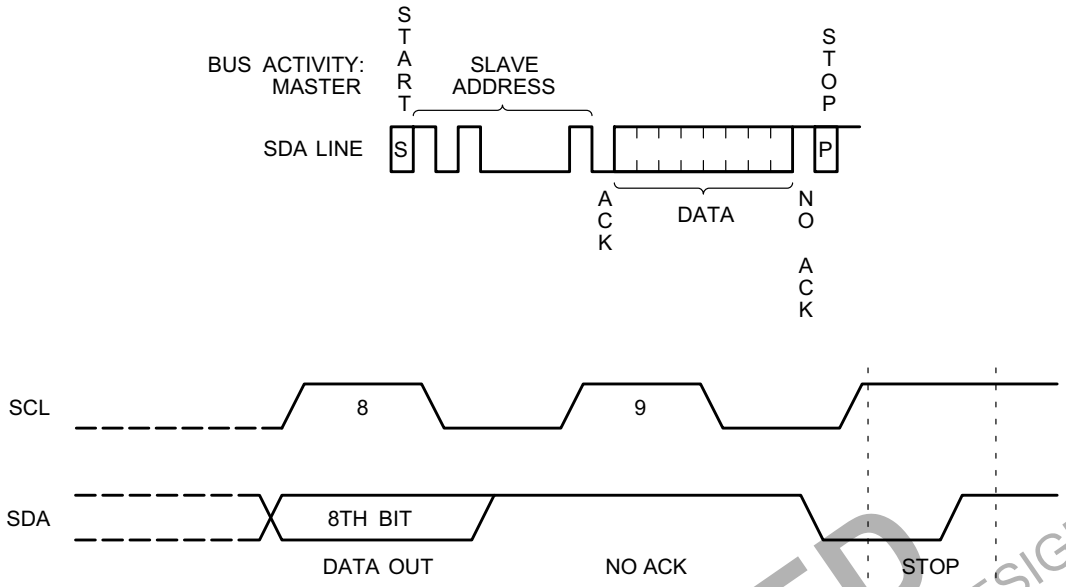

Figure 10. Immediate Address Read Timing

DISCONTINUED
THIS DEVICE IS NOT RECOMMENDED FOR NEW DESIGN
PLEASE CONTACT YOUR ONSEMI
REPRESENTATIVE FOR INFORMATION

Immediate/Current Address Read

The CAT1021/22/23 address counter contains the address of the last byte accessed, incremented by one. In other words, if the last READ or WRITE access was to address N, the READ immediately following would access data from address N + 1. For N = E = 255, the counter will wrap around to zero and continue to clock out valid data. After the CAT1021/22/23 receives its slave address information (with the R/$\overline{W}$ bit set to one), it issues an acknowledge, then transmits the 8−bit byte requested. The master device does not send an acknowledge, but will generate a STOP condition.

Selective/Random Read

Selective/Random READ operations allow the Master device to select at random any memory location for a READ operation. The Master device first performs a ‘dummy’ write operation by sending the START condition, slave address and byte addresses of the location it wishes to read. After the CAT1021/22/23 acknowledges, the Master device sends the START condition and the slave address again, this time with the R/$\overline{W}$ bit set to one. The CAT1021/22/23 then responds with its acknowledge and sends the 8−bit byte requested. The master device does not send an acknowledge but will generate a STOP condition.

Sequential Read

The Sequential READ operation can be initiated by either the Immediate Address READ or Selective READ operations. After the CAT1021/22/23 sends the inital 8− bit byte requested, the Master will responds with an acknowledge which tells the device it requires more data. The CAT1021/22/23 will continue to output an 8− bit byte for each acknowledge, thus sending the STOP condition.

The data being transmitted from the CAT1021/22/23 is sent sequentially with the data from address N followed by data from address N + 1. The READ operation address counter increments all of the CAT1021/22/23 address bits so that the entire memory array can be read during one operation.

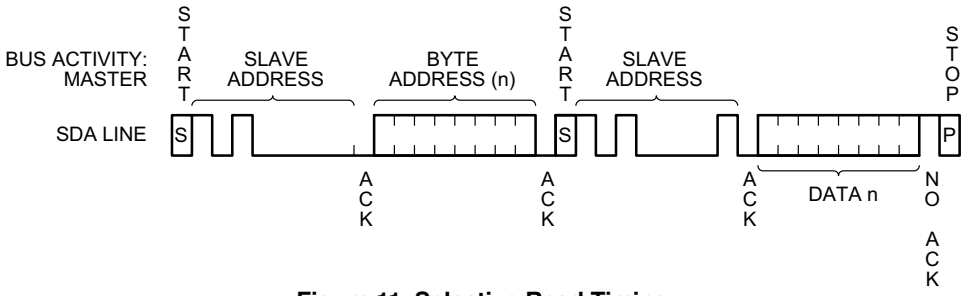

Figure 11. Selective Read Timing

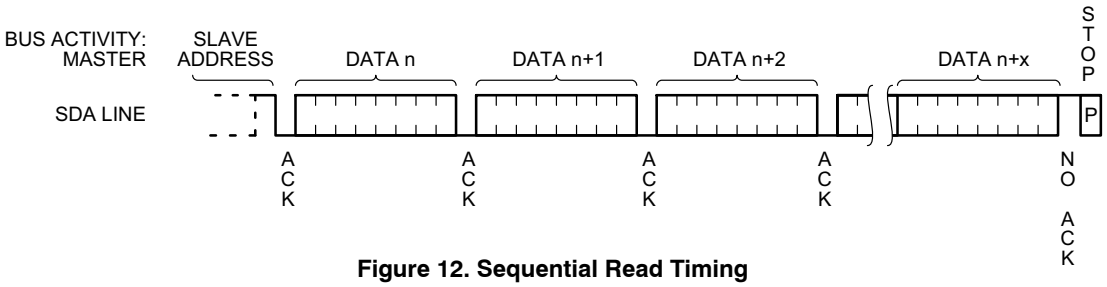

Figure 12. Sequential Read Timing

ORDERING INFORMATION

Orderable Part Numbers – CAT1021 Series (See Notes 1 – 5)			
Device	Reset Threshold	Package	Shipping†
CAT1021WI−45−GT3	4.50 V – 4.75 V	SOIC	3000 Tape & Reel
CAT1021WI−42−GT3	4.25 V – 4.50 V		
CAT1021WI−30−GT3	3.00 V – 3.15 V		
CAT1021WI−28−GT3	2.85 V – 3.00 V		
CAT1021WI−25−GT3	2.55 V – 2.70 V		
CAT1021YI−45−GT3	4.50 V – 4.75 V	TSSOP	
CAT1021YI−42−GT3	4.25 V – 4.50 V		
CAT1021YI−30−GT3	3.00 V – 3.15 V		
CAT1021YI−28−GT3	2.85 V – 3.00 V		
CAT1021YI−25−GT3	2.55 V – 2.70 V		
CAT1021ZI−45−GT3	4.50 V – 4.75 V	MSOP	
CAT1021ZI−42−GT3	4.25 V – 4.50 V		
CAT1021ZI−30−GT3	3.00 V – 3.15 V		
CAT1021ZI−28−GT3	2.85 V – 3.00 V		
CAT1021ZI−25−GT3	2.55 V – 2.70 V		
CAT1021ZD4I−45T3*	4.50 V – 4.75 V	TDFN	
CAT1021ZD4I−42T3*	4.25 V – 4.50 V		
CAT1021ZD4I−30T3*	3.00 V – 3.15 V		
CAT1021ZD4I−28T3*	2.85 V – 3.00 V		
CAT1021ZD4I−25T3*	2.55 V – 2.70 V		

DISCONTINUED
THIS DEVICE IS NOT RECOMMENDED FOR NEW DESIGN
PLEASE CONTACT YOUR onsemi
REPRESENTATIVE FOR INFORMATION

†For information on tape and reel specifications, including part orientation and tape sizes, please refer to our Tape and Reel Packaging Specifications Brochure, BRD8011/D.

1. All packages are RoHS−compliant (Lead−free, Halogen−free).
2. The standard lead finish is NiPdAu.
3. For additional package and temperature options, please contact your nearest ON Semiconductor Sales office.
4. TDFN not available in NiPdAu (−G) version.
5. For detailed information and a breakdown of device nomenclature and numbering systems, please see the ON Semiconductor Device Nomenclature document, TND310/D, available at www.onsemi.com

Orderable Part Numbers – CAT1022 Series (See Notes 1 – 5)			
Device	Reset Threshold	Package	Shipping†
CAT1022WI−45−GT3	4.50 V – 4.75 V	SOIC	3000 Tape & Reel
CAT1022WI−42−GT3	4.25 V – 4.50 V		
CAT1022WI−30−GT3	3.00 V – 3.15 V		
CAT1022WI−28−GT3	2.85 V – 3.00 V		
CAT1022WI−25−GT3	2.55 V – 2.70 V		
CAT1022YI−45−GT3	4.50 V – 4.75 V	TSSOP	
CAT1022YI−42−GT3	4.25 V – 4.50 V		
CAT1022YI−30−GT3	3.00 V – 3.15 V		
CAT1022YI−28−GT3	2.85 V – 3.00 V		
CAT1022YI−25−GT3	2.55 V – 2.70 V		
CAT1022ZI−45−GT3	4.50 V – 4.75 V	MSOP	
CAT1022ZI−30−GT3	3.00 V – 3.15 V		
CAT1022ZI−28−GT3	2.85 V – 3.00 V		
CAT1022ZI−25−GT3	2.55 V – 2.70 V		
CAT1022ZD4I−45T3*	4.50 V – 4.75 V	TDFN	
CAT1022ZD4I−42T3*	4.25 V – 4.50 V		
CAT1022ZD4I−30T3*	3.00 V – 3.15 V		
CAT1022ZD4I−28T3*	2.85 V – 3.00 V		
CAT1022ZD4I−25T3*	2.55 V – 2.70 V		

†For information on tape and reel specifications, including part orientation and tape sizes, please refer to our Tape and Reel Packaging Specifications Brochure, BRD8011/D.

1. All packages are RoHS−compliant (Lead−free, Halogen−free).
2. The standard lead finish is NiPdAu.
3. For additional package and temperature options, please contact your nearest ON Semiconductor Sales office.
4. TDFN not available in NiPdAu (−G) version.
5. For detailed information and a breakdown of device nomenclature and numbering systems, please see the ON Semiconductor Device Nomenclature document, TND310/D, available at www.onsemi.com

DISCONTINUED
THIS DEVICE IS NOT RECOMMENDED FOR NEW DESIGN
PLEASE CONTACT YOUR onsemi
REPRESENTATIVE FOR INFORMATION

Orderable Part Numbers – CAT1023 Series (See Notes 1 – 5)			
Device	Reset Threshold	Package	Shipping†
CAT1023WI−45−GT3	4.50 V – 4.75 V	SOIC	3000 Tape & Reel
CAT1023WI−42−GT3	4.25 V – 4.50 V		
CAT1023WI−30−GT3	3.00 V – 3.15 V		
CAT1023WI−28−GT3	2.85 V – 3.00 V		
CAT1023WI−25−GT3	2.55 V – 2.70 V		
CAT1023YI−45−GT3	4.50 V – 4.75 V	TSSOP	
CAT1023YI−42−GT3	4.25 V – 4.50 V		
CAT1023YI−30−GT3	3.00 V – 3.15 V		
CAT1023YI−28−GT3	2.85 V – 3.00 V		
CAT1023YI−25−GT3	2.55 V – 2.70 V		
CAT1023ZI−45−GT3	4.50 V – 4.75 V	MSOP	
CAT1023ZI−42−GT3	4.25 V – 4.50 V		
CAT1023ZI−30−GT3	3.00 V – 3.15 V		
CAT1023ZI−28−GT3	2.85 V – 3.00 V		
CAT1023ZI−25−GT3	2.55 V – 2.70 V		
CAT1023ZD4I−45T3*	4.50 V – 4.75 V	TDFN	
CAT1023ZD4I−42T3*	4.25 V – 4.50 V		
CAT1023ZD4I−30T3*	3.00 V – 3.15 V		
CAT1023ZD4I−28T3*	2.85 V – 3.00 V		
CAT1023ZD4I−25T3*	2.55 V – 2.70 V		

†For information on tape and reel specifications, including part orientation and tape sizes, please refer to our Tape and Reel Packaging Specifications Brochure, BRD8011/D.

1. All packages are RoHS−compliant (Lead−free, Halogen−free).
2. The standard lead finish is NiPdAu.
3. For additional package and temperature options, please contact your nearest ON Semiconductor Sales office.
4. TDFN not available in NiPdAu (−G) version.
5. For detailed information and a breakdown of device nomenclature and numbering systems, please see the ON Semiconductor Device Nomenclature document, TND310/D, available at www.onsemi.com

DISCONTINUED
THIS DEVICE IS NOT RECOMMENDED FOR NEW DESIGN
PLEASE CONTACT YOUR onsemi
REPRESENTATIVE FOR INFORMATION

ON Semiconductor is licensed by the Philips Corporation to carry the I²C bus protocol.

SOIC−8, 150 mils
CASE 751BD
ISSUE O

DATE 19 DEC 2008

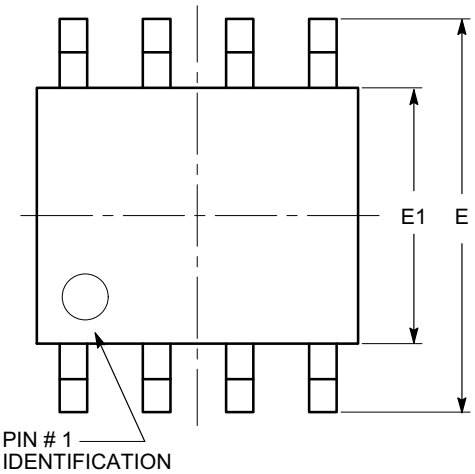

TOP VIEW

SYMBOL	MIN	NOM	MAX
A	1.35		1.75
A1	0.10		0.25
b	0.33		0.51
c	0.19		0.25
D	4.80		5.00
E	5.80		6.20
E1	3.80		4.00
e	1.27 BSC		
h	0.25		0.50
L	0.40		1.27
θ	0º		8º

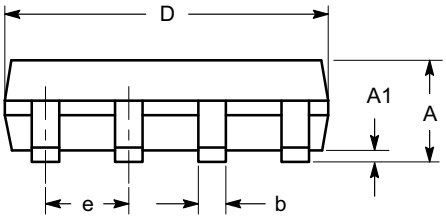

SIDE VIEW

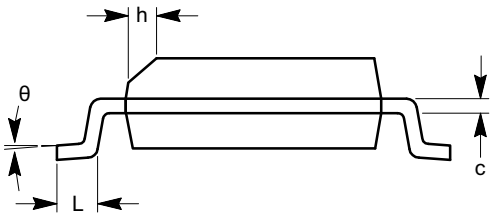

END VIEW

Notes:
(1) All dimensions are in millimeters. Angles in degrees.
(2) Complies with JEDEC MS-012.

DOCUMENT NUMBER:	98AON34272E	Electronic versions are uncontrolled except when accessed directly from the Document Repository. Printed versions are uncontrolled except when stamped "CONTROLLED COPY" in red.
DESCRIPTION:	SOIC−8, 150 MILS	PAGE 1 OF 1

onsemi and onsemi are trademarks of Semiconductor Components Industries, LLC dba **onsemi** or its subsidiaries in the United States and/or other countries. **onsemi** reserves the right to make changes without further notice to any products herein. **onsemi** makes no warranty, representation or guarantee regarding the suitability of its products for any particular purpose, nor does **onsemi** assume any liability arising out of the application or use of any product or circuit, and specifically disclaims any and all liability, including without limitation special, consequential or incidental damages. **onsemi** does not convey any license under its patent rights nor the rights of others.

onsemi, onsemi, and other names, marks, and brands are registered and/or common law trademarks of Semiconductor Components Industries, LLC dba "**onsemi**" or its affiliates and/or subsidiaries in the United States and/or other countries. **onsemi** owns the rights to a number of patents, trademarks, copyrights, trade secrets, and other intellectual property. A listing of **onsemi**'s product/patent coverage may be accessed at www.onsemi.com/site/pdf/Patent−Marking.pdf. **onsemi** reserves the right to make changes at any time to any products or information herein, without notice. The information herein is provided "as−is" and **onsemi** makes no warranty, representation or guarantee regarding the accuracy of the information, product features, availability, functionality, or suitability of its products for any particular purpose, nor does **onsemi** assume any liability arising out of the application or use of any product or circuit, and specifically disclaims any and all liability, including without limitation special, consequential or incidental damages. Buyer is responsible for its products and applications using **onsemi** products, including compliance with all laws, regulations and safety requirements or standards, regardless of any support or applications information provided by **onsemi**. "Typical" parameters which may be provided in **onsemi** data sheets and/or specifications can and do vary in different applications and actual performance may vary over time. All operating parameters, including "Typicals" must be validated for each customer application by customer's technical experts. **onsemi** does not convey any license under any of its intellectual property rights nor the rights of others. **onsemi** products are not designed, intended, or authorized for use as a critical component in life support systems or any FDA Class 3 medical devices or medical devices with a same or similar classification in a foreign jurisdiction or any devices intended for implantation in the human body. Should Buyer purchase or use **onsemi** products for any such unintended or unauthorized application, Buyer shall indemnify and hold **onsemi** and its officers, employees, subsidiaries, affiliates, and distributors harmless against all claims, costs, damages, and expenses, and reasonable attorney fees arising out of, directly or indirectly, any claim of personal injury or death associated with such unintended or unauthorized use, even if such claim alleges that **onsemi** was negligent regarding the design or manufacture of the part. **onsemi** is an Equal Opportunity/Affirmative Action Employer. This literature is subject to all applicable copyright laws and is not for resale in any manner.

ADDITIONAL INFORMATION

TECHNICAL PUBLICATIONS:
Technical Library: www.onsemi.com/design/resources/technical−documentation
onsemi Website: www.onsemi.com

ONLINE SUPPORT: www.onsemi.com/support
For additional information, please contact your local Sales Representative at
www.onsemi.com/support/sales

Looking for pricing, stock, or lifecycle information?

Click below to explore more details on WIN SOURCE:

- View CAT1023WI-45-GT3 on WIN SOURCE
- ON Semiconductor Information

Optimize Your Supply Chain with WIN SOURCE Solutions

- Global Sourcing Solution
- Obsolete Management
- Cost Control Management
- Shortage Management
- Alternative Solution
- Excess Inventory Management