Coaxial

Power Splitter/Combiner

ZFSC-2-4+

2 Way-0° 50Ω 0.2 to 1000 MHz

Generic photo used for illustration purposes only

CASE STYLE: K18

Connectors	Model
BNC	ZFSC-2-4+
SMA	ZFSC-2-4-S+
N-TYPE	ZFSC-2-4-N+
BRACKET (OPTION "B")	

+RoHS Compliant

The +Suffix identifies RoHS Compliance. See our web site for RoHS Compliance methodologies and qualifications

Maximum Ratings

Operating Temperature	-55°C to 100°C
Storage Temperature	-55°C to 100°C
Power Input (as a splitter)	1W max.
Internal Dissipation	0.125W max.

Permanent damage may occur if any of these limits are exceeded.

Coaxial Connections

SUM PORT	3
PORT 1	1
PORT 2	2

Features

- wideband, 0.2 to 1000 MHz
- low insertion loss, 0.5 dB typ.
- good isolation, 25 dB typ.
- excellent amplitude unbalance, 0.1 dB typ.
- excellent phase unbalance, 0.5 deg. typ.
- rugged shielded case

Applications

- cellular
- VHF/UHF
- instrumentation

Outline Drawing

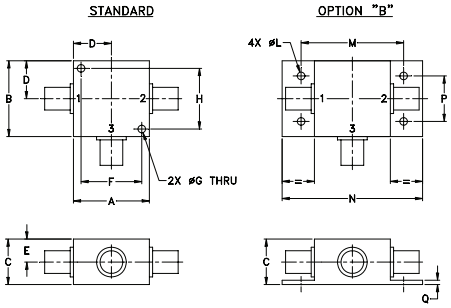

Outline Dimensions (inch / mm)

A	B	C	D	E	F	G	H
1.25	1.25	.75	.63	.38	1.00	.125	1.000
31.75	31.75	19.05	16.00	9.65	25.40	3.18	25.40

J	K	L	M	N	P	Q	wt
--	--	.125	1.688	2.18	.75	.07	grams
--	--	3.18	42.88	55.37	19.05	1.78	70.0

For option B with N-type connectors, dimension "C" increases to 0.94 inches.

Electrical Specifications

FREQ. RANGE (MHz)	ISOLATION (dB)						INSERTION LOSS (dB) ABOVE 3.0 dB						PHASE UNBALANCE (Degrees)			AMPLITUDE UNBALANCE (dB)		
	L		M		U		L		M		U		L	M	U	L	M	U
f_L-f_U	Typ.	Min.	Typ.	Min.	Typ.	Min.	Typ.	Max.	Typ.	Max.	Typ.	Max.	Max.	Max.	Max.	Max.	Max.	Max.
0.2-1000	20	15	25	20	23	18	0.2	0.8	0.5	1.0	0.9	1.2	2	4	4	0.15	0.15	0.30

L = low range [f_L to 10 f_L] M = mid range [10 f_L to f_U/2] U= upper range [f_U/2 to f_U]

Typical Performance Data

Frequency (MHz)	Total Loss[1] (dB) S-1	Total Loss[1] (dB) S-2	Amplitude Unbalance (dB)	Isolation (dB)	Phase Unbalance (deg.)	VSWR S	VSWR 1	VSWR 2
0.20	3.31	3.30	0.02	24.83	0.10	1.17	1.41	1.39
0.70	3.29	3.24	0.05	30.54	0.20	1.07	1.25	1.23
1.00	3.26	3.24	0.03	31.83	0.36	1.06	1.23	1.21
24.00	3.17	3.26	0.09	35.39	0.03	1.08	1.14	1.13
46.00	3.23	3.32	0.08	35.23	0.09	1.12	1.08	1.10
68.00	3.25	3.33	0.08	34.84	0.18	1.14	1.10	1.10
140.00	3.27	3.31	0.04	32.99	0.27	1.12	1.13	1.14
260.00	3.29	3.29	0.01	29.95	0.36	1.18	1.14	1.16
380.00	3.50	3.45	0.04	28.42	0.25	1.22	1.17	1.18
500.00	3.52	3.45	0.07	27.91	0.21	1.24	1.21	1.20
590.00	3.49	3.40	0.09	28.34	0.17	1.22	1.22	1.21
710.00	3.59	3.46	0.13	30.28	0.34	1.21	1.25	1.22
840.00	3.65	3.47	0.18	30.75	0.49	1.19	1.28	1.22
920.00	3.69	3.49	0.20	27.07	0.65	1.17	1.26	1.21
1000.00	3.82	3.58	0.24	22.95	0.81	1.18	1.27	1.21

1. Total Loss = Insertion Loss + 3dB splitter loss.

ZFSC-2-4-S+
TOTAL LOSS

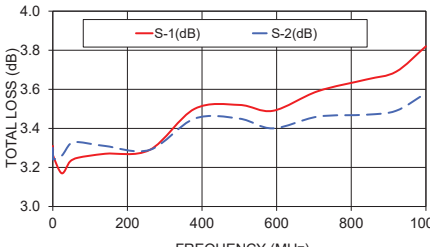

ZFSC-2-4-S+
ISOLATION

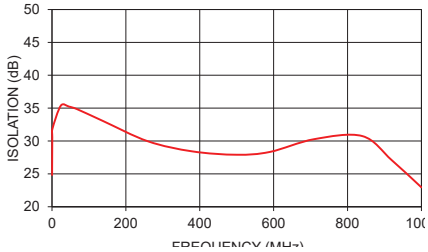

ZFSC-2-4-S+
VSWR

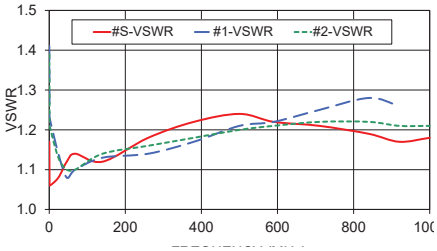

electrical schematic

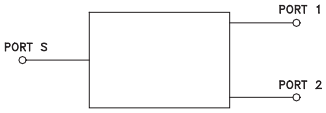

Notes

A. Performance and quality attributes and conditions not expressly stated in this specification document are intended to be excluded and do not form a part of this specification document.

B. Electrical specifications and performance data contained in this specification document are based on Mini-Circuit's applicable established test performance criteria and measurement instructions.

C. The parts covered by this specification document are subject to Mini-Circuits standard limited warranty and terms and conditions (collectively, "Standard Terms"); Purchasers of this part are entitled to the rights and benefits contained therein. For a full statement of the Standard Terms and the exclusive rights and remedies thereunder, please visit Mini-Circuits' website at www.minicircuits.com/MCLStore/terms.jsp

Mini-Circuits®

www.minicircuits.com P.O. Box 350166, Brooklyn, NY 11235-0003 (718) 934-4500 sales@minicircuits.com

Looking for pricing, stock, or lifecycle information?

Click below to explore more details on WIN SOURCE:

- View ZFSC-2-4+ on WIN SOURCE
- Mini-Circuits Information

Optimize Your Supply Chain with WIN SOURCE Solutions

- Global Sourcing Solution
- Obsolete Management
- Cost Control Management
- Shortage Management
- Alternative Solution
- Excess Inventory Management