# THE DATASHEET OF

# GMX-SMT2-S2-88

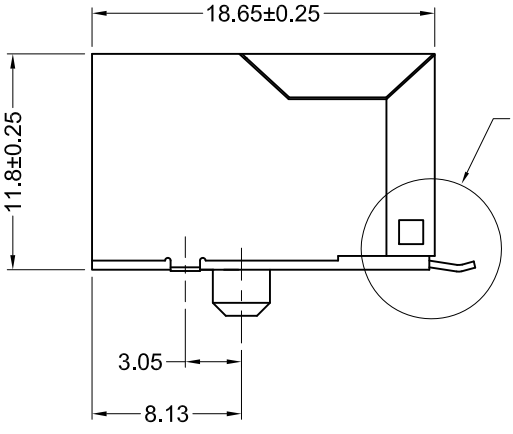


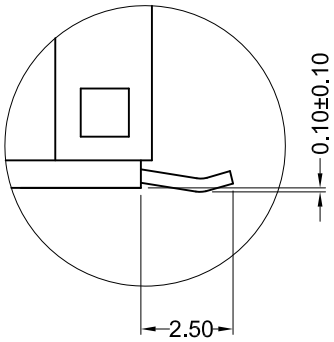


DETAIL A

Recommended PCB Layout
(Top View)

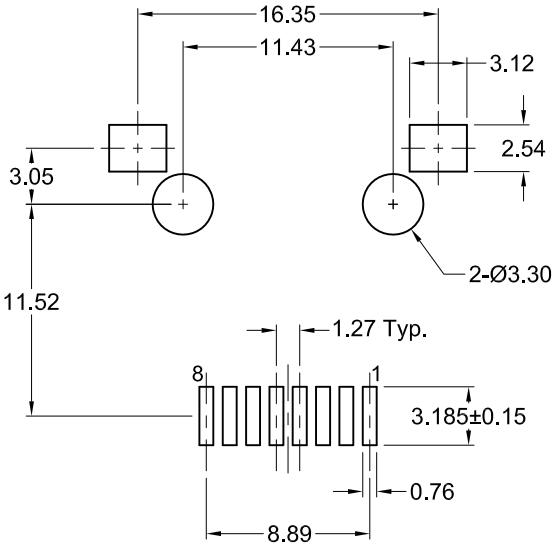


## *Materials and Finish*

Housing Material:
high temp. thermoplastic,
(reflow process compatible)
UL 94V-0 rated, black color

Design meets UL 1863 Sec. 8
Electrical Probe and Sec. 20
Child Finger test requirements

Contact Material: phosphor bronze

Contact Plating Options:
Standard: 0.0001" Nickel
Plating, Selective Plating
Gold Flash on Contact
Area, Tin on Termination End

50: 0.0001" Nickel Plating,
Selective Plating 0.000050"
Gold on Contact Area to
Comply with FCC Requirements
Under No. 47 C.F.R. Part 68,
Subpart F, Tin on Termination End

## *Electrical Characteristics*

Current Rating: 1.0 Amps

Current Voltage: 125V DC

Insulation Resistance:
500 Megohms min.

Dielectric Withstanding Voltage:
1000V rms, 60Hz

Contact Resistance:
20 milliohms max.

Durability Rating:
1000 mating cycles min.

Operating Temperature:
-40°C to +85°C

| ng | Packaging |
|---|---|
| n | Bulk |
| | Bulk |
| n | Tape & Reel |
| | Tape & Reel |

## *Electrical Performance*

Category 5 100MHz Bandwidth Performance

Performance meets near end crosstalk (NEXT)
Requirements of -40dB @ 100MHz per
EIA/TIA 568A in applications where UL
Approved Category 5 cable (GA27-3773-1) is used

Shielded types offer 20dB shielding from
30MHz to 300MHz

RoHS COMPLIANT

c UL us E134345

c SP us LR78160

| Tolerances |
|---|
| X.X ± 0.25 |
| X.XX ± 0.15 |
| Unless Stated Otherwise |

| EV. BY | CHK. BY | DRAWN BY | DATE |
|---|---|---|---|
| S. Vien | H. MA | R. Aguirre | 05/23/05 |
| S. Vien | H. MA | | |
| S. Vien | P. DalCanto | | UNITS |
| D. Gih | P. DalCanto | | |
| W. Cook | H. MA | | mm |
| H. MA | C. Furumasu | | |

# GMX-SMT2-S2-88

Right Angle Modular Jack, Shielded ,RoHS Compliant

8 position, 8 contacts, Surface Mount

KYCON

## Looking for pricing, stock, or lifecycle information?

Click below to explore more details on WIN SOURCE:

- View GMX-SMT2-S2-88 on WIN SOURCE
- Kycon, Inc. Information

## Optimize Your Supply Chain with WIN SOURCE Solutions

- Global Sourcing Solution
- Obsolete Management
- Cost Control Management
- Shortage Management
- Alternative Solution
- Excess Inventory Management