THE DATASHEET OF

5-534204-9

www.win-source.net 0086-755-83957316

© – TE Connectivity. All Rights Reserved.

REVISIONS					
P	LTR	DESCRIPTION	DATE	DWN	APVD
	T1	ECR-25-238910	10APR2025	ABS	PS

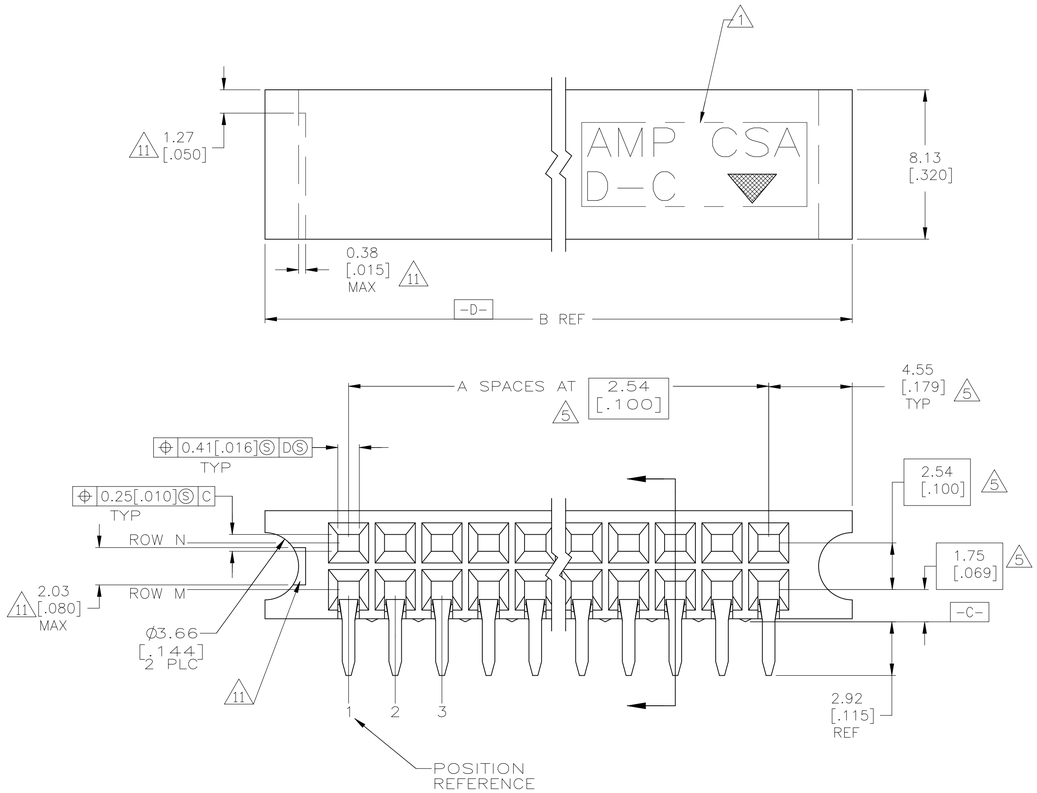

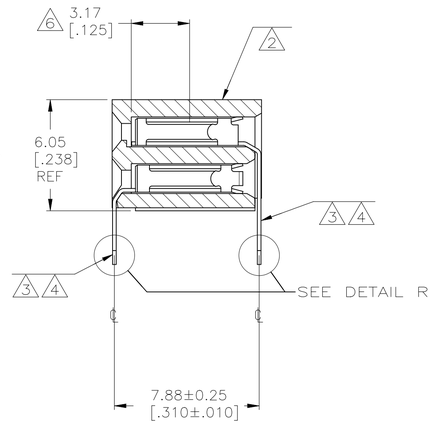

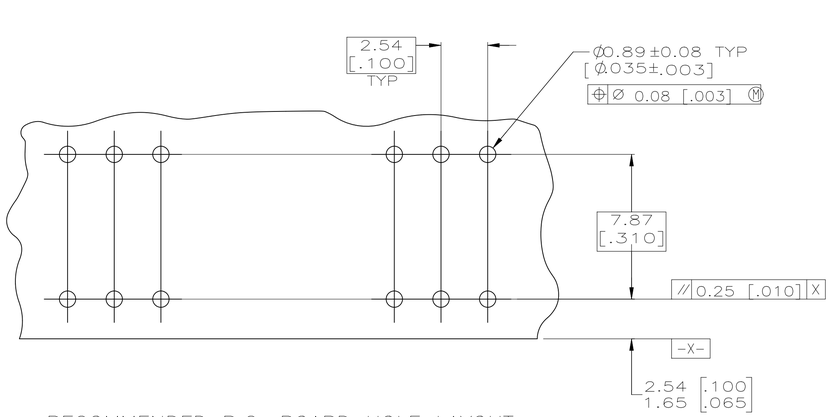

RECOMMENDED P.C. BOARD HOLE LAYOUT

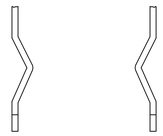

DETAIL R
BOARD RETENTION FEATURE
SCALE 10:1

12	OBSOLETE		1, 4	1, 4	16.71 [.658]	3	8	10	~~7-534204-2~~
12	OBSOLETE		1,3	1,3	14.17 [.558]	2	6	10	~~7-534204-1~~
12	OBSOLETE		1, 2, 50, 51,99,100	1, 2, 50, 51,99,100	260.55 [10.258]	99	200	10	~~7-534204-0~~
12	OBSOLETE		1, 2, 40, 41, 79, 80	1, 2, 40, 41, 79, 80	209.75 [8.258]	79	160	10	~~6-534204-9~~
12	OBSOLETE		1, 2, 35, 36, 69, 70	1, 2, 35, 36, 69, 70	184.35 [7.258]	69	140	10	~~6-534204-8~~
12	OBSOLETE		1, 2, 32, 33, 64, 65	1, 2, 32, 33, 64, 65	171.65 [6.758]	64	130	10	~~6-534204-7~~
			1, 2, 27, 28, 54, 55	1, 2, 27, 28, 54, 55	146.25 [5.758]	54	110	10	6-534204-6
12	OBSOLETE		1, 2, 47, 48	1, 2, 47, 48	128.47 [5.058]	47	96	10	~~6-534204-5~~
	12		1, 2, 35, 36	1, 2, 35, 36	97.99 [3.858]	35	72	10	6-534204-4
	12		1, 2, 34, 35	1, 2, 34, 35	95.45 [3.758]	34	70	10	6-534204-3
	OBSOLETE	9	1, 2, 19, 20	1, 2, 19, 20	57.35 [2.258]	19	40	10	~~6-534204-2~~
			1, 2, 11, 12	1, 2, 11, 12	37.03 [1.458]	11	24	10	6-534204-1
12	OBSOLETE		1, 2, 7, 8	1, 2, 7, 8	26.87 [1.058]	7	16	10	~~6-534204-0~~
			1, 2, 9, 10	1, 2, 9, 10	31.95 [1.258]	9	20	10	5-534204-9
			1, 2, 39, 40	1, 2, 39, 40	108.15 [4.258]	39	80	10	5-534204-8
12	OBSOLETE		1, 2, 30, 31, 59, 60	1, 2, 30, 31, 59, 60	158.95 [6.258]	59	120	10	~~5-534204-7~~
12	OBSOLETE		1, 2, 25, 26, 49, 50	1, 2, 25, 26, 49, 50	133.55 [5.258]	49	100	10	~~5-534204-6~~
	OBSOLETE		1, 2, 29, 30	1, 2, 29, 30	82.75 [3.258]	29	60	10	~~5-534204-5~~
			1, 2, 14, 15	1, 2, 14, 15	44.65 [1.758]	14	30	10	5-534204-4
	12		1, 2, 17, 18	1, 2, 17, 18	52.27 [2.058]	17	36	10	~~5-534204-3~~
			1, 2, 5, 6	1, 2, 5, 6	21.79 [.858]	5	12	10	5-534204-2
			1, 2, 24, 25	1, 2, 24, 25	70.05 [2.758]	24	50	10	5-534204-1
	OBSOLETE		1, 4	1, 4	16.71 [.658]	3	8	8	~~2-534204-2~~
			1,3	1,3	14.17 [.558]	2	6	8	~~2-534204-1~~
12	OBSOLETE		1, 2, 50, 51,99,100	1, 2, 50, 51,99,100	260.55 [10.258]	99	200		~~2-534204-0~~
	OBSOLETE		1, 2, 40, 41, 79, 80	1, 2, 40, 41, 79, 80	209.75 [8.258]	79	160		~~1-534204-9~~
			1, 2, 35, 36, 69, 70	1, 2, 35, 36, 69, 70	184.35 [7.258]	69	140		1-534204-8
12	OBSOLETE		1, 2, 32, 33, 64, 65	1, 2, 32, 33, 64, 65	171.65 [6.758]	64	130		~~1-534204-7~~
	SUPERSEDED BY 6-534204-6		1, 2, 27, 28, 54, 55	1, 2, 27, 28, 54, 55	146.25 [5.758]	54	110		1-534204-6
12	OBSOLETE		1, 2, 47, 48	1, 2, 47, 48	128.47 [5.058]	47	96		~~1-534204-5~~
	12		1, 2, 35, 36	1, 2, 35, 36	97.99 [3.858]	35	72		1-534204-4
			1, 2, 34, 35	1, 2, 34, 35	95.45 [3.758]	34	70		1-534204-3
	12		1, 2, 19, 20	1, 2, 19, 20	57.35 [2.258]	19	40		1-534204-2
	SUPERSEDED BY 6-534204-1		1, 2, 11, 12	1, 2, 11, 12	37.03 [1.458]	11	24		1-534204-1
	12	4	1, 2, 7, 8	1, 2, 7, 8	26.87 [1.058]	7	16		~~1-534204-0~~
	SUPERSEDED BY 5-534204-9		1, 2, 9, 10	1, 2, 9, 10	31.95 [1.258]	9	20		534204-9
			1, 2, 39, 40	1, 2, 39, 40	108.15 [4.258]	39	80		534204-8
12	OBSOLETE		1, 2, 30, 31, 59, 60	1, 2, 30, 31, 59, 60	158.95 [6.258]	59	120		~~534204-7~~
12	OBSOLETE		1, 2, 25, 26, 49, 50	1, 2, 25, 26, 49, 50	133.55 [5.258]	49	100		~~534204-6~~
	OBSOLETE		1, 2, 29, 30	1, 2, 29, 30	82.75 [3.258]	29	60		~~534204-5~~
			1, 2, 14, 15	1, 2, 14, 15	44.65 [1.758]	14	30		534204-4
	OBSOLETE		1, 2, 17, 18	1, 2, 17, 18	52.27 [2.058]	17	36		~~534204-3~~
	SUPERSEDED BY 5-534204-2		1, 2, 5, 6	1, 2, 5, 6	21.79 [.858]	5	12		534204-2
	SUPERSEDED BY 5-534204-1		1, 2, 24, 25	1, 2, 24, 25	70.05 [2.758]	24	50		534204-1
		FINISH	ROW M	ROW N	B	A	NO OF POSN		PART NUMBER
			POSITION WITH BOARD RETENTION						

1. "AMP", "CSA", "▼", AND "DATE CODE" WITH .062 ±.015 HIGH CHARACTERS WHERE SIZE PERMITS.
2. HOUSING: LCP MATERIAL
3. CONTACT: PHOSPHOR BRONZE.
4. CONTACT FINISH: DUPLEX PLATED 0.00076 [.000030] GOLD IN CONTACT AREA, 0.00127–0.00254 [.000050–.000100] BRIGHT TIN–LEAD ON SOLDER TAILS, ALL OVER 0.00127 [.000050] NICKEL.
5. THESE DIMENSIONS PERTAIN TO CAVITY ℄'S ONLY, NOT TO CONTACT LOCATIONS.
6. POINT OF MEASUREMENT FOR PLATING THICKNESS (INSIDE CONTACT BEAMS).
7. CSA LOGO INK STAMPED WHITE ON HOUSING.
8. PRELIMINARY PART – NOT RELEASED FOR PRODUCTION
9. CONTACT FINISH: DUPLEX PLATED 0.00076 [.000030] GOLD IN CONTACT AREA, 0.00127–0.00254 [.000050–.000100] MATTE TIN ON SOLDER TAILS, ALL OVER 0.00127 [.000050] NICKEL.
10. ROHS 2002/95/EC COMPLIANT.
11. RECESSED AREA AROUND MOLD GATE IS OPTIONAL. THIS FEATURE IS ALLOWABLE ON EITHER SIDE OF HOUSING OR MAY NOT BE PRESENT AT ALL.
12. OBSOLETE PARTS: OBSOLETE CIS STREAMLINING PER D.RENAUD/D.SINISI

THIS DRAWING IS A CONTROLLED DOCUMENT.

DIMENSIONS: mm [INCHES]

TOLERANCES UNLESS OTHERWISE SPECIFIED:
0 PLC ± –
1 PLC ± –
2 PLC ± 0.13 [.005]
3 PLC ± –
4 PLC ± –
ANGLES ± –

MATERIAL 2 3
FINISH SEE TABLE

DWN T. HOFFMAN 4/29/96
CHK A. GABANY 5/7/96
APVD –
PRODUCT SPEC –
APPLICATION SPEC –
WEIGHT –

TE Connectivity

NAME RCPT ASSY, MOD II, DBL ROW, 2.54 X 2.54 [.100 X .100] CL, GUIDE PIN EARS

SIZE	CAGE CODE	DRAWING NO	RESTRICTED TO
A1	00779	C-534204	–

CUSTOMER DRAWING | SCALE 6:1 | SHEET 1 OF 1 | REV T1

4805 (1/15)

Looking for pricing, stock, or lifecycle information?

Click below to explore more details on WIN SOURCE:

- View 5-534204-9 on WIN SOURCE
- TE Connectivity Information

Optimize Your Supply Chain with WIN SOURCE Solutions

- Global Sourcing Solution
- Obsolete Management
- Cost Control Management
- Shortage Management
- Alternative Solution
- Excess Inventory Management