THE DATASHEET OF

TFC-SCJ-LCJ

www.win-source.net 0086-755-83957316

TO-CONNE

Fiber Optic Adapter TFC-SCJ-LCJ

1 Specification

Data item	Specification
Model number	TFC-SCJ-LCJ
Conforming fiber	Single-mode and Multi-mode (50/125)
Screw hole	With screw holes
Split sleeve material	Zirconia
Housing Color	PC Polishing
	Blue

2 Mechanical Properties

Data item	Standard value
Insertion Loss	0.20dB （Max.）
Durability	1000 matching 0.20dB（Max.）
Operation Temperature	-25℃+75℃
Storage Temperature	-40℃+85℃

3 Structure (Unit: mm)

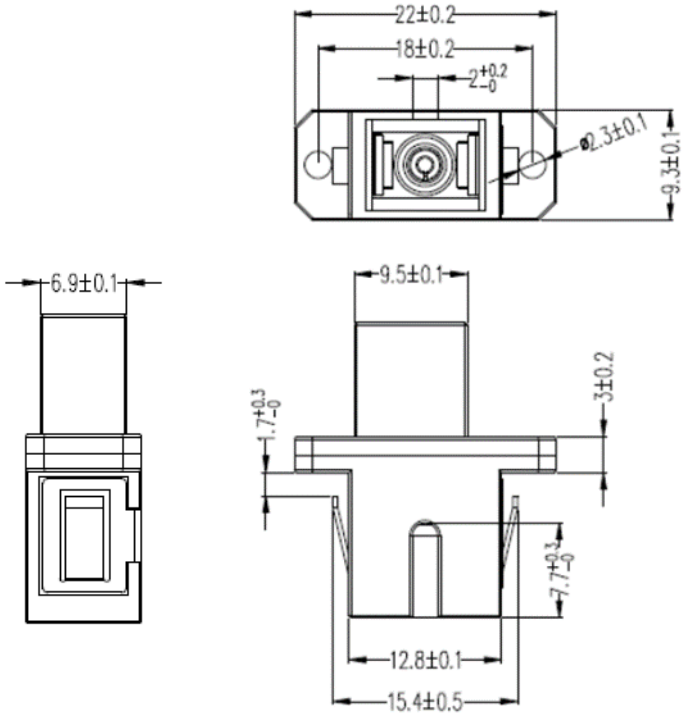

4 Environmental Standards

RoHS compliant

Looking for pricing, stock, or lifecycle information?

Click below to explore more details on WIN SOURCE:

- View TFC-SCJ-LCJ on WIN SOURCE
- TYCLON Information

Optimize Your Supply Chain with WIN SOURCE Solutions

- Global Sourcing Solution
- Obsolete Management
- Cost Control Management
- Shortage Management
- Alternative Solution
- Excess Inventory Management