THE DATASHEET OF

5569984-1

THIS DRAWING IS UNPUBLISHED. RELEASED FOR PUBLICATION -,- .
© COPYRIGHT - BY TYCO ELECTRONICS CORPORATION. ALL RIGHTS RESERVED.

LOC	DIST
AA	00

REVISIONS

P	LTR	DESCRIPTION	DATE	DWN	APVD
	B	ECO-07-017784	15AUG2007	LAM	PR

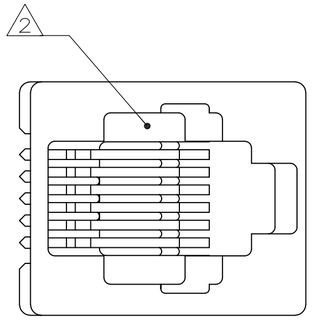

1. MATERIAL: HOUSING – HTN MOLDING COMPOUND, UL 94V-0, COLOR: BLACK
   TERMINAL – 0.36[.014] THICK PHOS BRONZE PLATED WITH 1.27µm [.000050] MINIMUM THICK HARD GOLD IN LOCALIZED GOLD PLATE AREA AND 3.81µm[.000150] MINIMUM THICK MATTE TIN IN SOLDER AREA OVER 1.27µm[.000050] MINIMUM THICK NICKEL UNDERPLATE.

2. CAVITY CONFORMS TO FCC RULES AND REGULATIONS PART 68, SUBPART F.

3. BULK PACKAGED IN A TRAY.

4. TERMINALS LOADED IN MIDDLE TWO (2) POSITIONS.

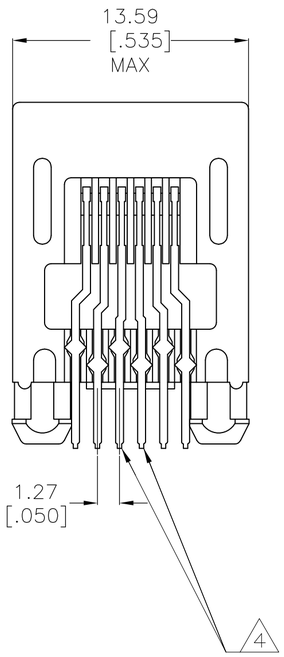

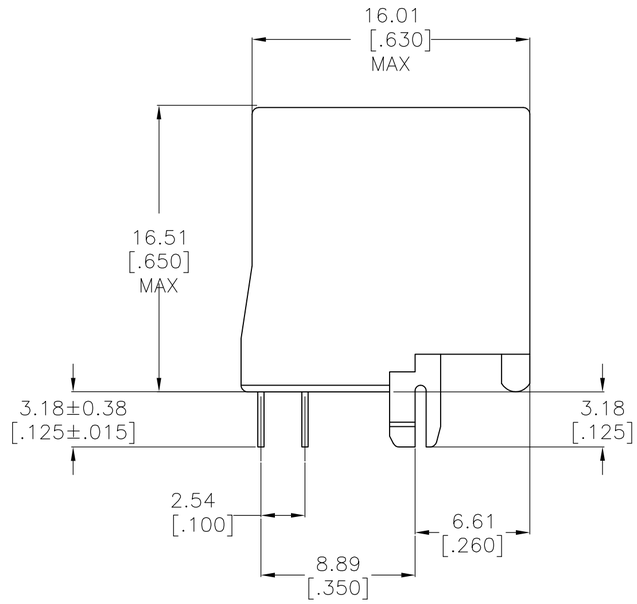

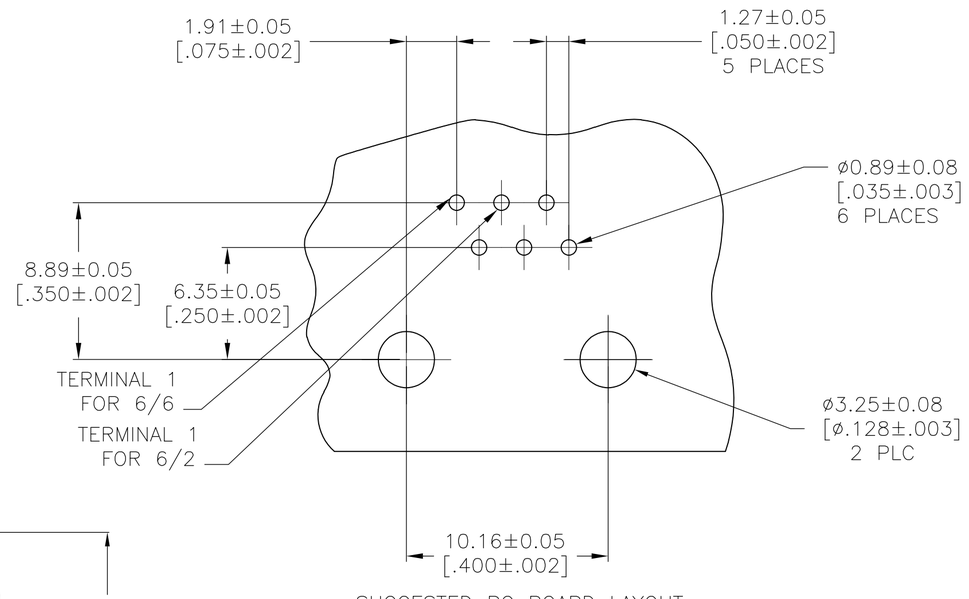

SUGGESTED PC BOARD LAYOUT
COMPONENT SIDE

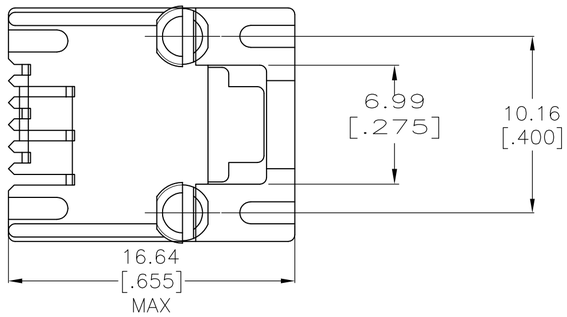

2 4	3	5569984-2
6	3	5569984-1
TERMINALS	PACKAGED	PART NUMBER

THIS DRAWING IS A CONTROLLED DOCUMENT.

DIMENSIONS: mm [INCHES]

TOLERANCES UNLESS OTHERWISE SPECIFIED:
0 PLC ± -
1 PLC ± -
2 PLC ± 0.13[.005]
3 PLC ± -
4 PLC ± -
ANGLES ± -

MATERIAL: SEE NOTE 1
FINISH: SEE NOTE 1

DWN 08JUN2005 L. VARELA – DOCK5
CHK 08JUN2005 J. WESTMAN
APVD 08JUN2005 S. FLICKINGER
PRODUCT SPEC 108-1163
APPLICATION SPEC 114-2048
WEIGHT –

Tyco Electronics
Tyco Electronics Corporation
Harrisburg, Pa 17105-3608

NAME: MODULAR JACK ASSEMBLY, TOP ENTRY, 6 POSITION, WITHOUT PANEL STOPS

SIZE A2 | CAGE CODE 00779 | DRAWING NO C-5569984 | RESTRICTED TO –

CUSTOMER DRAWING | SCALE 4:1 | SHEET 1 OF 1 | REV B

5569984

Looking for pricing, stock, or lifecycle information?

Click below to explore more details on WIN SOURCE:

- View 5569984-1 on WIN SOURCE
- TE Connectivity Information

Optimize Your Supply Chain with WIN SOURCE Solutions

- Global Sourcing Solution
- Obsolete Management
- Cost Control Management
- Shortage Management
- Alternative Solution
- Excess Inventory Management