3 mm Square SMT Trimmer Potentiometers (Cermet, Open Frame Type)

Type: **EVM3G**
EVM3E
EVM3Y
EVM3S
EVM3R

3G, 3E

3S

3R

3Y

Features

- Automatic adjustment type (EVM3G, 3E, 3Y)
- Both sides adjust type (EVM3S)
- Back side adjust type and low-profile 0.9 mm (1.0 mm max.) EVM3R
- High reliability realized by cermet element
- Excellent mountability
- Conforms to JIS C5260-1:1999
- RoHS compliant

Recommended Applications

- Audio/visual, office, and communication equipment
- General electronic equipment

Explanation of Part Numbers

1	2	3	4	5	6	7	8	9	10	11	12
E	V	M	3	G	S	X	5	0	B	5	2
Product Code			Type/Structure (3G, 3E, 3Y, 3S, 3R)		Packaging				Taper & Resistance Example : B52=500 Ω		

Specifications

Total Resistance Value Resistance Tolerance	EVM3G, 3E, 3Y, 3S : 100 Ω to 1 MΩ / EVM3R : 500 Ω to 1 MΩ EVM3G : ±20 % / EVM3E, 3Y, 3S, 3R : ±25 %
Power Rating Limiting Element Voltage	0.15 W 50 V
Rotation Torque	EVM3G, 3E, 3Y, 3S : 2 to 20 mN·m / EVM3R : 1 to 20 mN·m
Temperature Coefficient of Resistance	$\pm 250 \times 10^{-6}$/°C

Minimum Quantity/Packing Unit

Part Number	Taping		
	Quantity per reel	Packaging quantity	Dia. of reel (mm)
EVM3G, EVM3E EVM3Y, EVM3S EVM3R	2,000	10,000	ϕ178

The standard packaging methods for a reel is ϕ178.
Please contact us, if you would like different packaging methods. (Bulk, Reel of ϕ330, Reel of ϕ380)

Design and specifications are each subject to change without notice. Ask factory for the current technical specifications before purchase and/or use.
Should a safety concern arise regarding this product, please be sure to contact us immediately.

Dimensions in mm (not to scale)

● 3-terminal, for Automatic Trimming Adjustment ····· EVM3G, EVM3E

No. 1

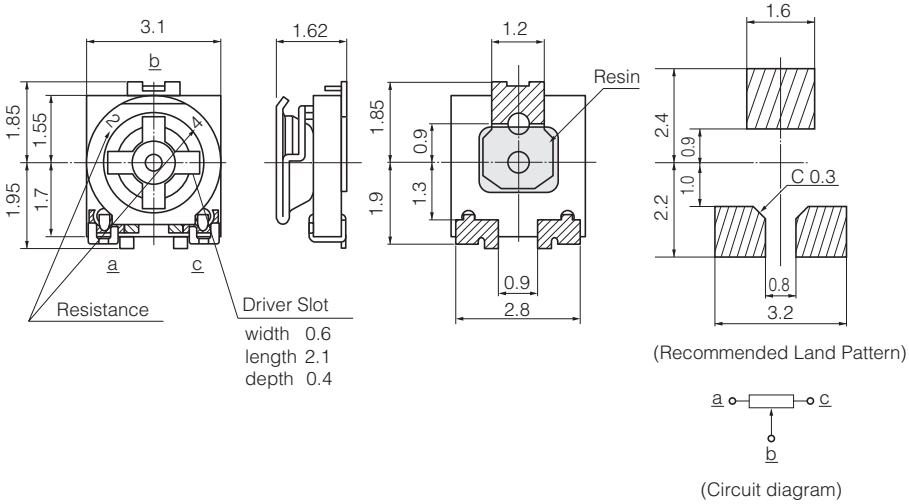

Mass (Weight) : 45 mg/pc.

● 3-terminal, for Automatic Trimming Adjustment ····· EVM3Y

No. 2

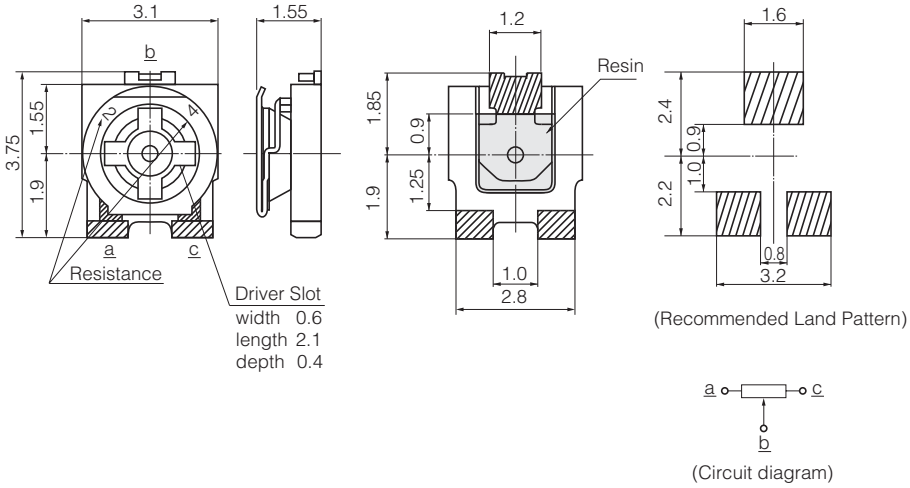

Mass (Weight) : 42 mg/pc.

Design and specifications are each subject to change without notice. Ask factory for the current technical specifications before purchase and/or use.
Should a safety concern arise regarding this product, please be sure to contact us immediately.

Dimensions in mm (not to scale)

● 3-terminal, Both Sides Adjust EVM3S

No. 3

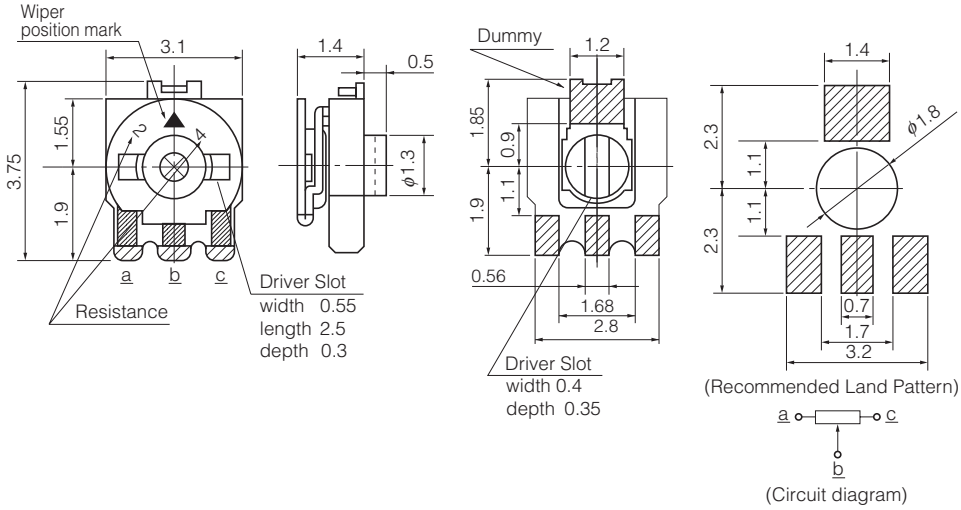

Mass (Weight) : 45 mg/pc.

● 3-terminal, Back Side Adjust EVM3R

No. 4

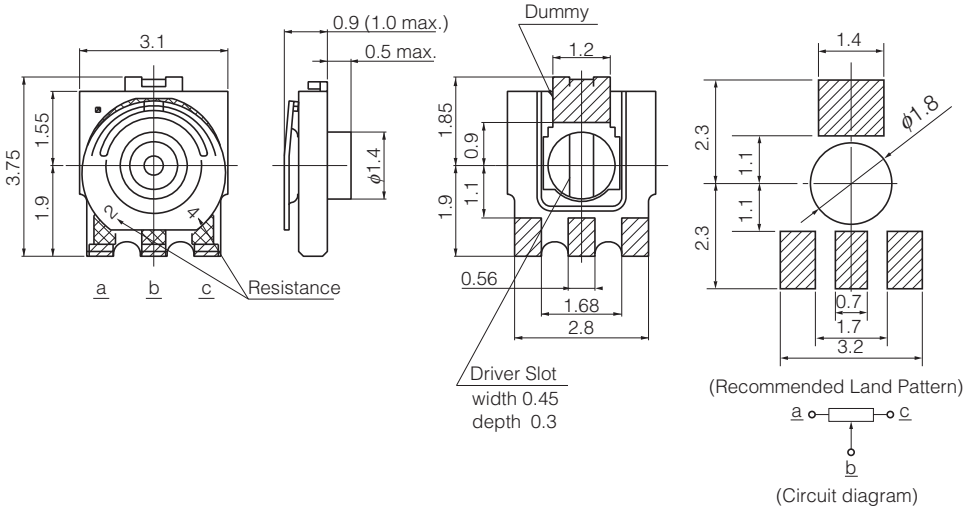

Mass (Weight) : 32 mg/pc.

Looking for pricing, stock, or lifecycle information?

Click below to explore more details on WIN SOURCE:

- View EVM3SSX50BE5 on WIN SOURCE
- Panasonic Information

Optimize Your Supply Chain with WIN SOURCE Solutions

- Global Sourcing Solution
- Obsolete Management
- Cost Control Management
- Shortage Management
- Alternative Solution
- Excess Inventory Management