THE DATASHEET OF

0311126

www.win-source.net 0086-755-83957316

URTK/SP - Test disconnect terminal block

0311126

https://www.phoenixcontact.com/us/products/0311126

Please be informed that the data shown in this PDF document is generated from our online catalog. Please find the complete data in the user documentation. Our general terms of use for downloads are valid.

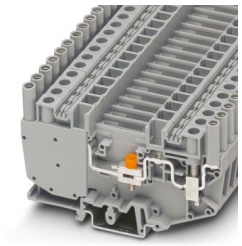

Test disconnect terminal block, with slide, nom. voltage: 500 V, nominal current: 41 A, connection method: Screw connection, Rated cross section: 6 mm^2, cross section: 0.5 mm^2 - 10 mm^2 , mounting type: NS 35/7,5, NS 35/15, NS 32, color: gray

Your advantages

- Touch-proof test sockets with 4 mm diameter are already permanently integrated
- The terminal blocks can be fitted with fixed and switchable bridges on both sides

Commercial data

Item number	0311126
Packing unit	50 pc
Minimum order quantity	1 pc
Sales key	BE12
Product key	BE1233
Catalog page	Page 525 (C-1-2019)
GTIN	4017918001315
Weight per piece (including packing)	38.36 g
Weight per piece (excluding packing)	37.02 g
Customs tariff number	85369010
Country of origin	TR

Technical data

Notes

General

Note	When establishing a connection on the open housing side of a feed-through modular terminal block of the same series and size, the block must be provided with a cover if the expected insulation voltage is >320 V.
	The max. load current must not be exceeded by the total current of all connected conductors.

Product properties

Product type	Test disconnect terminal block
Number of connections	2
Number of rows	1
Potentials	1

Insulation characteristics

Overvoltage category	III
Degree of pollution	3

Electrical properties

Rated surge voltage	6 kV
Maximum power dissipation for nominal condition	1.31 W

Connection data

Number of connections per level	2
Nominal cross section	6 mm²

Level 1 above 1 below 1

Screw thread	M4
Tightening torque	1.5 ... 1.8 Nm
Stripping length	11 mm
Connection in acc. with standard	IEC 60947-7-1
Conductor cross section rigid	0.5 mm² ... 10 mm²
Cross section AWG	20 ... 8 (converted acc. to IEC)
Conductor cross section flexible	0.5 mm² ... 6 mm²
Conductor cross section, flexible [AWG]	20 ... 10 (converted acc. to IEC)
Conductor cross-section flexible (ferrule without plastic sleeve)	0.5 mm² ... 6 mm²
Flexible conductor cross section (ferrule with plastic sleeve)	0.5 mm² ... 6 mm²
2 conductors with same cross section, solid	0.5 mm² ... 2.5 mm²
2 conductors with same cross section, flexible	0.5 mm² ... 4 mm²
2 conductors with same cross section, flexible, with ferrule without plastic sleeve	0.5 mm² ... 2.5 mm²
2 conductors with the same cross section, flexible, with TWIN ferrule with plastic sleeve	0.5 mm² ... 4 mm²

Nominal current	41 A
Maximum load current	50 A (with 10 mm² conductor cross section)
Nominal voltage	500 V
Nominal cross section	6 mm²

Dimensions

Width	8.2 mm
Height	99.5 mm
Depth on NS 32	64 mm
Depth on NS 35/7,5	59 mm
Depth on NS 35/15	66.5 mm

Material specifications

Color	gray (RAL 7042)
Flammability rating according to UL 94	V0
Insulating material group	I
Insulating material	PA
Static insulating material application in cold	-60 °C
Temperature index of insulation material (DIN EN 60216-1 (VDE 0304-21))	130 °C
Relative insulation material temperature index (Elec., UL 746 B)	130 °C
Fire protection for rail vehicles (DIN EN 45545-2) R22	HL 1 - HL 3
Fire protection for rail vehicles (DIN EN 45545-2) R23	HL 1 - HL 3
Fire protection for rail vehicles (DIN EN 45545-2) R24	HL 1 - HL 3
Fire protection for rail vehicles (DIN EN 45545-2) R26	HL 1 - HL 3
Calorimetric heat release NFPA 130 (ASTM E 1354)	28 MJ/kg
Surface flammability NFPA 130 (ASTM E 162)	passed
Specific optical density of smoke NFPA 130 (ASTM E 662)	passed
Smoke gas toxicity NFPA 130 (SMP 800C)	passed

Electrical tests

Temperature-rise test

Requirement temperature-rise test	Increase in temperature ≤ 45 K
Result	Test passed
Short-time withstand current 6 mm²	0.72 kA
Short-time withstand current 10 mm²	1.2 kA
Result	Test passed

Power-frequency withstand voltage

Result	Test passed

Mechanical properties

Mechanical data

Open side panel	No

Mechanical tests

Mechanical strength

Result	Test passed

Attachment on the carrier

DIN rail/fixing support	NS 32/NS 35
Test force setpoint	5 N
Result	Test passed

Test for conductor damage and slackening

Rotation speed	10 (+/- 2) rpm
Revolutions	135
Conductor cross section/weight	0.5 mm² / 0.3 kg
	6 mm² / 1.4 kg
	10 mm² / 2 kg
Result	Test passed

Environmental and real-life conditions

Needle-flame test

Time of exposure	30 s
Result	Test passed

Oscillation/broadband noise

Specification	DIN EN 50155 (VDE 0115-200):2018-05
Spectrum	Service life test category 2, bogie-mounted
Frequency	f_1 = 5 Hz to f_2 = 250 Hz
ASD level	6.12 (m/s²)²/Hz
Acceleration	3.12g
Test duration per axis	5 h
Test directions	X-, Y- and Z-axis
Result	Test passed

Shocks

Pulse shape	Half-sine
Acceleration	5g
Shock duration	30 ms
Number of shocks per direction	3
Test directions	X-, Y- and Z-axis (pos. and neg.)
Result	Test passed

Ambient conditions

Ambient temperature (operation)	-60 °C ... 110 °C (Operating temperature range incl. self-heating; for max. short-term operating temperature, see RTI Elec.)
Ambient temperature (storage/transport)	-25 °C ... 60 °C (for a short time, not exceeding 24 h, -60 °C to +70 °C)

Ambient temperature (assembly)	-5 °C ... 70 °C
Ambient temperature (actuation)	-5 °C ... 70 °C
Permissible humidity (operation)	20 % ... 90 %
Permissible humidity (storage/transport)	30 % ... 70 %

Standards and regulations

Connection in acc. with standard	IEC 60947-7-1

Mounting

Mounting type	NS 35/7,5
	NS 35/15
	NS 32
Screw thread	M3

Drawings

Schematic diagram

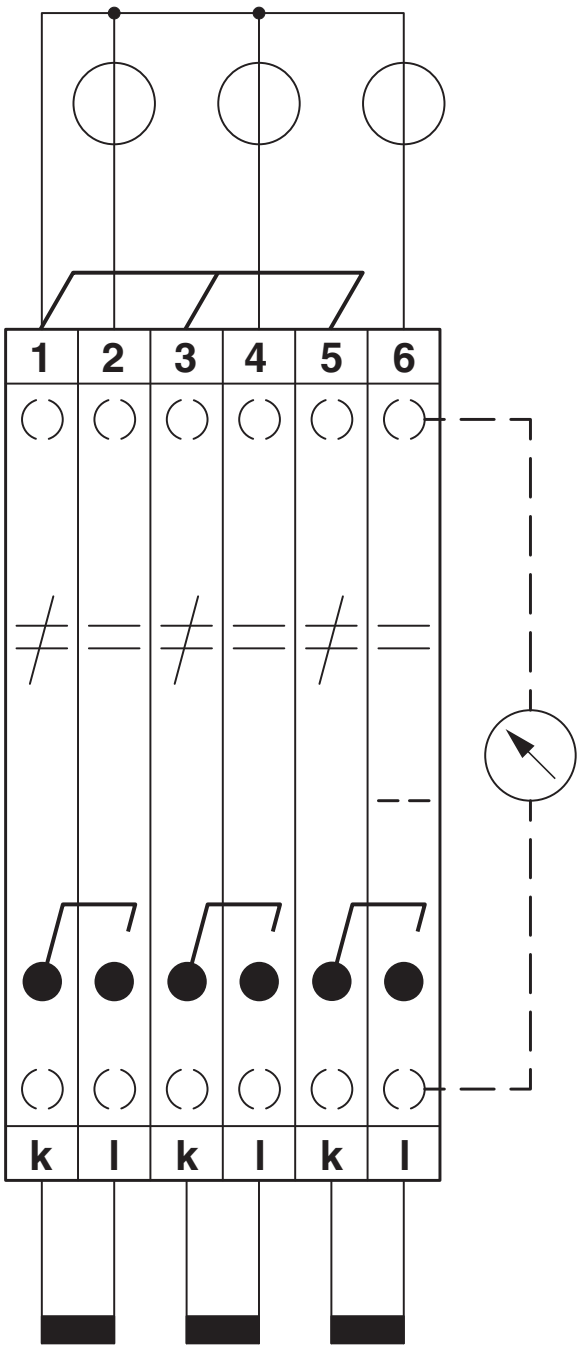

Three-phase linked transducer test set

Schematic diagram

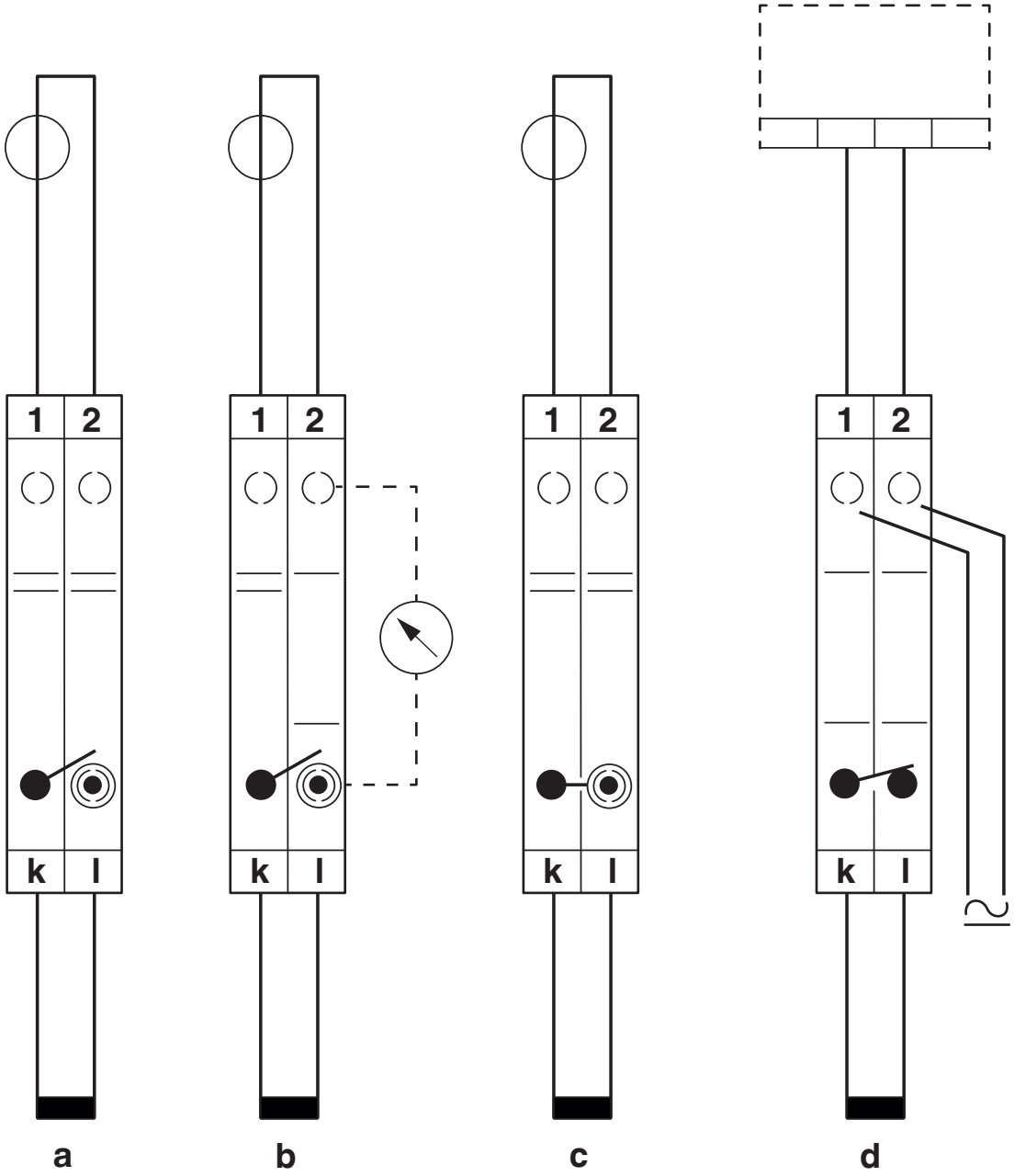

Simple current transformer test circuit
a = normal operation
b = measured value testing
c = transformer testing
d = relay testing

Schematic diagram

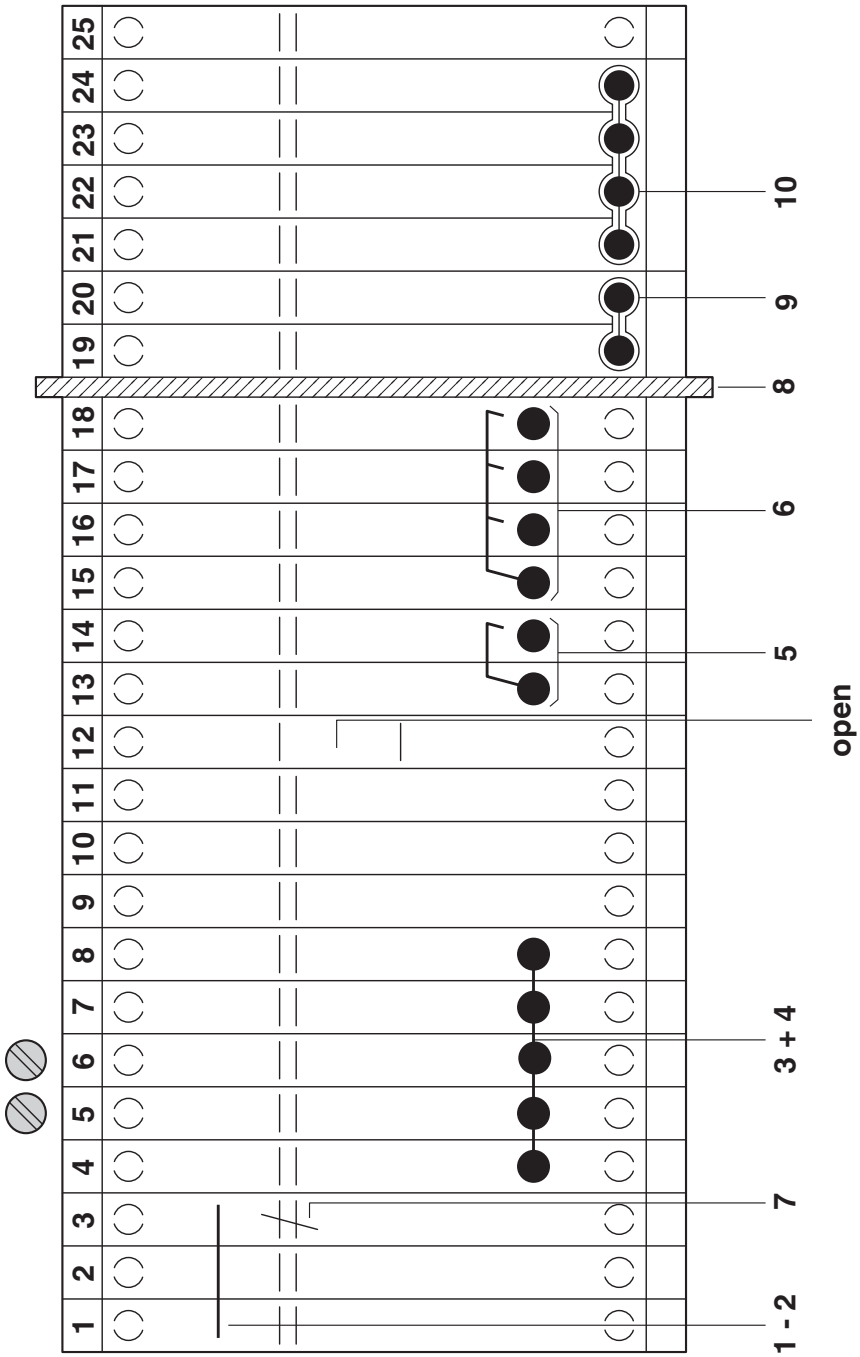

Three-phase transducer test set

Connection diagram

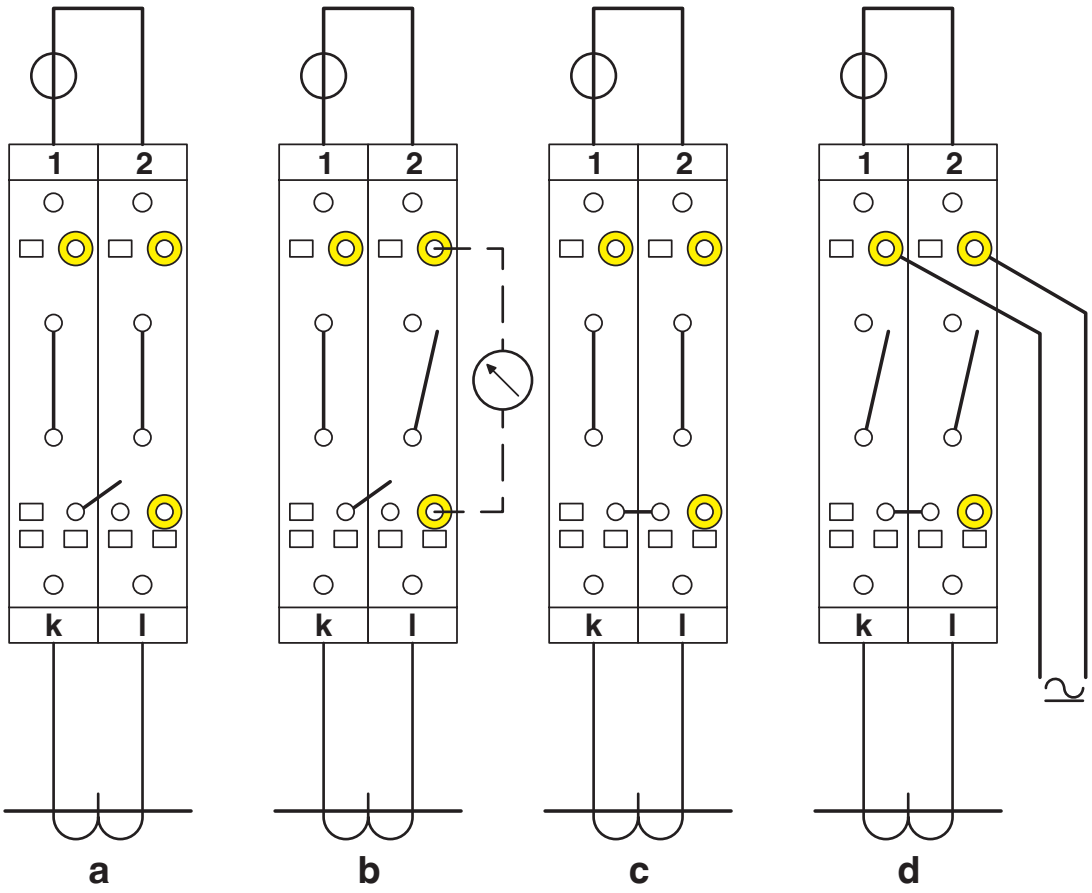

Simple current transformer test circuit
a = normal operation
b = measured value testing
c = transformer testing
d = relay testing

Circuit diagram

Approvals

To download certificates, visit the product detail page: https://www.phoenixcontact.com/us/products/0311126

CSA
Approval ID: 13631

	Nominal voltage U_N	Nominal current I_N	Cross section AWG	Cross section mm^2
	300 V	45 A	26 - 8	-

IECEE CB Scheme
Approval ID: NL-42274

	Nominal voltage U_N	Nominal current I_N	Cross section AWG	Cross section mm^2
	500 V	-	-	- 6

EAC
Approval ID: EACKZ 08593

cULus Recognized
Approval ID: E60425

	Nominal voltage U_N	Nominal current I_N	Cross section AWG	Cross section mm^2
Use group B				
	300 V	45 A	26 - 8	-
Use group C				
	300 V	45 A	26 - 8	-

KEMA-KEUR
Approval ID: 71-102522

	Nominal voltage U_N	Nominal current I_N	Cross section AWG	Cross section mm^2
	500 V	-	-	- 6

Classifications

ECLASS

ECLASS-11.0	27141126
ECLASS-12.0	27141126
ECLASS-13.0	27250109

ETIM

ETIM 9.0	EC000902

UNSPSC

UNSPSC 21.0	39121400

Environmental product compliance

EU RoHS

Fulfills EU RoHS substance requirements	Yes
Exemption	6(c)

China RoHS

Environment friendly use period (EFUP)	EFUP-50
	An article-related China RoHS declaration table can be found in the download area for the respective article under "Manufacturer declaration". For all articles with EFUP-E, no China RoHS declaration table issued and required.

EU REACH SVHC

REACH candidate substance (CAS No.)	Lead(CAS: 7439-92-1)
SCIP	86fe84c6-bb5a-4270-971b-f3088333030f

Phoenix Contact 2024 © - all rights reserved
https://www.phoenixcontact.com

Phoenix Contact USA
586 Fulling Mill Road
Middletown, PA 17057, United States
(+717) 944-1300
info@phoenixcon.com

Looking for pricing, stock, or lifecycle information?

Click below to explore more details on WIN SOURCE:

- View 0311126 on WIN SOURCE
- Phoenix Contact Information

Optimize Your Supply Chain with WIN SOURCE Solutions

- Global Sourcing Solution
- Obsolete Management
- Cost Control Management
- Shortage Management
- Alternative Solution
- Excess Inventory Management