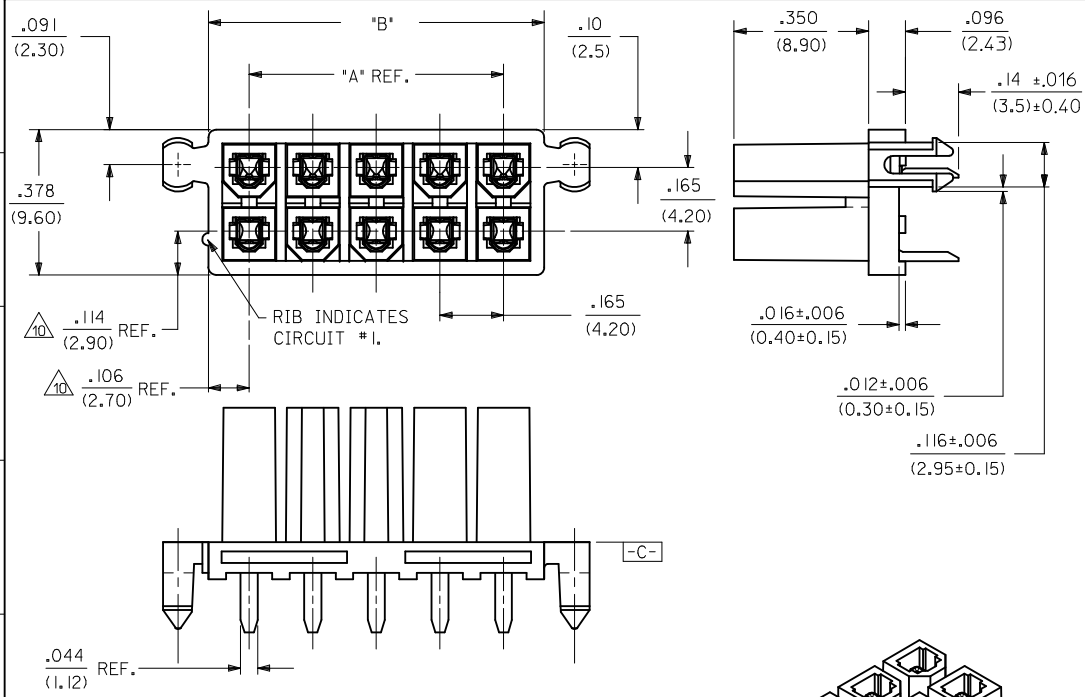

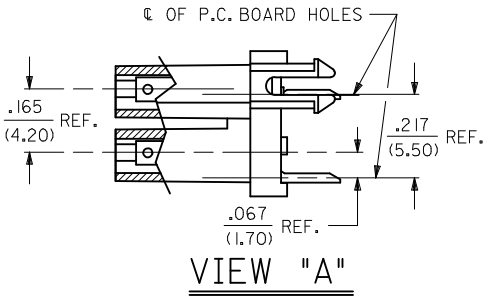

VIEW "A"

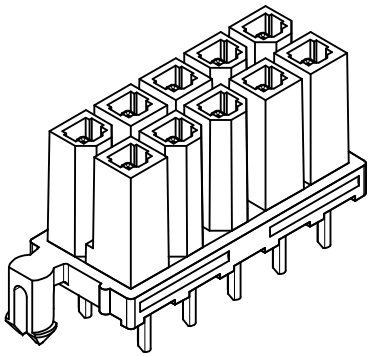

NOTES:

1) HOUSING AND TERMINAL MATERIAL:
   A - HOUSING : NYLON 6/6, UNFILLED U.L. 94V-
   COLOR NATURAL. TERMINAL: BRASS.
   B - HOUSING : NYLON 6/6, UNFILLED U.L. 94V-
   COLOR NATURAL. TERMINAL: BRASS.
   C - HOUSING : NYLON 6/6, UNFILLED U.L. 94V-
   COLOR NATURAL. TERMINAL: PHOS. B
   D - HOUSING : NYLON 6/6, UNFILLED U.L. 94V-
   COLOR NATURAL. TERMINAL: PHOS. B
2) TERMINAL PLATING:
   1 - .000100/(.00254) MIN. MATTE TIN OVER .000050/(.00127) MIN. NICKEL.
   2 - .000030/(.00076) MIN. SELECT GOLD AND .000100/(.00254) MIN. SELECT MATTE TI OVER .000050/(.00127) MIN. NICKEL OVER
   4 - .000050/(.00127) MIN. SELECT GOLD AND .000100/(.00254) MIN. SELECT MATTE TI OVER .000050/(.00127) MIN. NICKEL OVER
3) PRODUCT SPECIFICATION: PS-5556-002.
4) TRAY PACK PER PK-42385-999.
5) PART MATES WITH MINI-FIT B.M.I. PLUG #42475 AND HEADERS 42404,42440,43810,43879, AND 4406
6) PHANTOM LINES INDICATE AREAS WHERE TERMINAL STANDOFFS CONTACT P.C. BOARD. NO EXPOSED T OR VIAS ALLOWED NEAR THESE AREAS.
7) A MAXIMUM TOLERANCE OF .050/(1.27) ALLOWS FO POINTS OF ELECTRICAL CONTACT. A MAXIMUM TOL OF .020/(.51) ALLOWS FOR 4 POINTS OF CONTACT.
8) .016 IN/IN OR .016 MM/MM MAX. BOW ALLOWABLE A
9) IT IS RECOMMENDED TO USE THE 42475 SERIES TO AID IN PCB INSERTION. INSERT THE 42385 PA INTO THE PCB.
10) DIMENSION TO BE USED FOR ALIGNMENT OF CIRCU
11) CONNECTOR ASSEMBLIES ARE NOT TO BE MATED
12) PARTS NOT DESIGNED FOR CURRENT SHARING.
13) WHEN THIS PRODUCT IS USED IN A BLIND MATING THE SYSTEM LEVEL DESIGN MUST INCORPORATE THE CAPTURE ENVELOPE (UP TO (.100/2.54) MISA OR PLUG HOUSING AND CAN THUS ALIGN THEMSE ALSO REQUIRED IN THE OVERALL DESIGN, TO ALL MOVE INTO A STRESS-FREE POSITION AFTER MAT ONE HEADER IS ALLOWED PER P.C. BOARD.
14) PARTS CONFORM TO CLASS 'B' REQUIREMENTS OF COSMETIC SPECIFICATION PS-45499-002.

HOUSIN

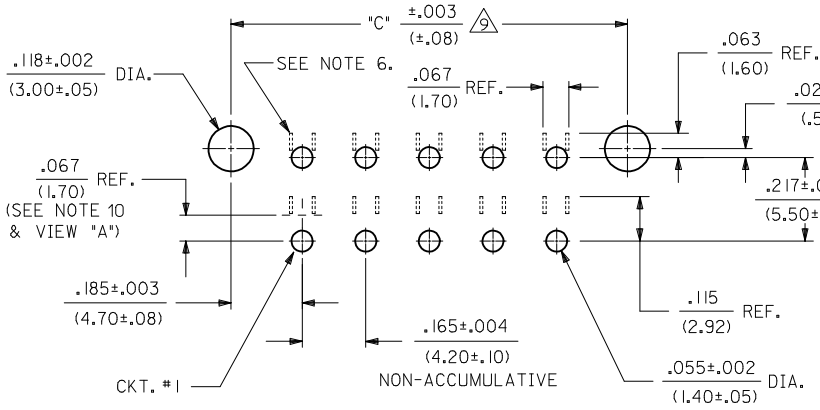

RECOMMENDED HOLE LAYOUT FOR .070/(1.78) MAX. THICK P.C. BOARD

VIEWED FROM COMPONENT SIDE

EDIT PCB LINE TYPE	DESCRIPTION	
EC NO: UCP2016-4771		2016/06/13
DRWN:CSLAFTER		2016/13/06
CH'KD:JBELL		2016/07/19
APPR:FSMITH		
X5	REV	

QUALITY SYMBOLS: =0

GENERAL TOLERANCES (UNLESS SPECIFIED)

	mm	INCH
4 PLACES	± ---	± ---
3 PLACES	± ---	± .010
2 PLACES	± 0.25	± .015
1 PLACE	± 0.38	± ---
0 PLACE	±	±
ANGULAR ± 5 °		

DRAFT WHERE APPLICABLE MUST REMAIN WITHIN DIMENSIONS

DIMENSION STYLE: IN/MM

DRAWN BY	DATE	
RJF	1988/12/09	
CHECKED BY	DATE	
JTR	1988/12/09	
APPROVED BY	DATE	
FSMITH	2010/11/22	

MATERIAL NO.: SEE SHT 3-4

SIZE: C

THIS DRAWING CONTAI INCORPORATED AND SH

tb_frame_C_P_AM_T
Rev. G 2012/01/11

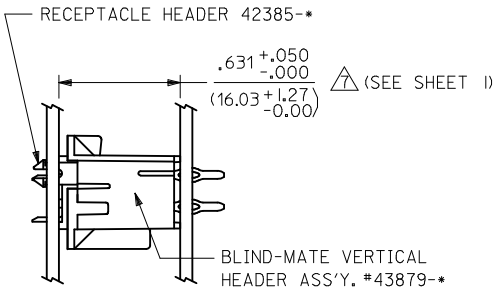

P.C.BOARD-TO-P.C.BOARD
APPLICATION #4

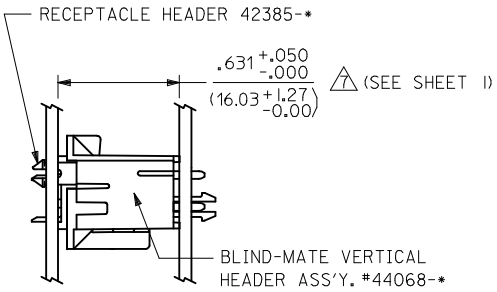

P.C.BOARD-TO-P.C.BOARD
APPLICATION #5

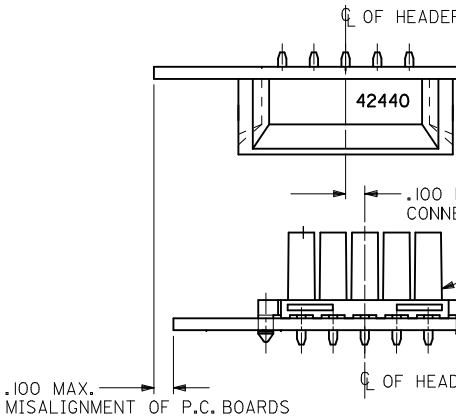

ALIGNMENT TOLERANCES FOR .100 MAX. BOAR
(NO CONNECTOR FLO

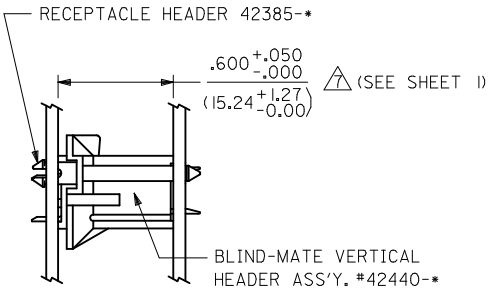

PANEL-TO-P.C.BOARD
APPLICATION #1

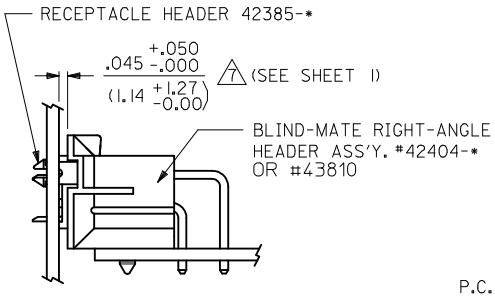

PANEL-TO-P.C.BOARD
APPLICATION #2

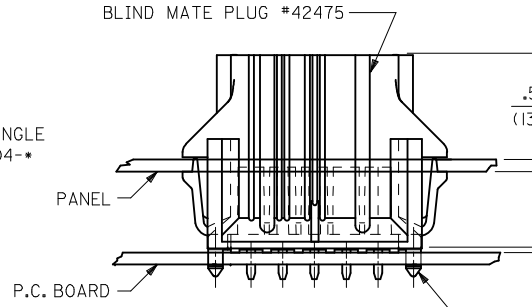

PANEL-TO-P.C. BOARD
APPLICATION #3

SEE NOTE 13

SEE SHEET 1	EC NO: UCP2016-4771	DRWN:CSLAFTER	2016/06/13
		CH'KD:JBELL	2016/13/06
		APPR:FSMITH	2016/07/19
X5			

REV | DESCRIPTION

QUALITY SYMBOLS
E/A =0
E/C =0
E/P =0

GENERAL TOLERANCES (UNLESS SPECIFIED)

	mm	INCH
4 PLACES	± ---	± ---
3 PLACES	± ---	± .010
2 PLACES	± 0.25	± .015
1 PLACE	± 0.38	± ---
0 PLACE	±	±
ANGULAR ± 5 °		

DRAFT WHERE APPLICABLE MUST REMAIN WITHIN DIMENSIONS

DIMENSION STYLE: IN/MM

DRAWN BY	RJF	DATE 1988/12/09
CHECKED BY	JTR	DATE 1988/12/09
APPROVED BY	FSMITH	DATE 2010/11/22
MATERIAL NO.	SEE CHART	

SIZE C

THIS DRAWING CONTAI
INCORPORATED AND SH

tb_frame_C_P_AM_T
Rev. G 2012/01/11

PART NUMBER	ENG. NUMBER	CKT. SIZE	HSG./TERM. MATERIAL	TERM. PLATING
NO E.D.P.	A-42385-02B1	2	94V-0,BRASS	MATTE TIN OVER NICKEL
15-24-7041	-04B1	4		
15-24-7061	-06B1	6		
NO E.D.P.	-08B1	8		
15-24-7101	-10B1	10		
NO E.D.P.	-12B1	12		
15-24-7141	-14B1	14		
15-24-7161	-16B1	16		
15-24-7181	-18B1	18		
NO E.D.P.	-20B1	20		
NO E.D.P.	-22B1	22		
15-24-7241	A-42385-24B1	24	94V-0,BRASS	MATTE TIN OVER NICKEL
NO E.D.P.	A-42385-02B2	2	94V-0,BRASS	30 M.I. SEL. GOLD
15-24-7043	-04B2	4		
15-24-7063	-06B2	6		
NO E.D.P.	-08B2	8		
15-24-7103	-10B2	10		
NO E.D.P.	-12B2	12		
15-24-7143	-14B2	14		
15-24-7163	-16B2	16		
15-24-7183	-18B2	18		
NO E.D.P.	-20B2	20		
NO E.D.P.	-22B2	22		
15-24-7243	A-42385-24B2	24	94V-0,BRASS	30 M.I. SEL. GOLD
NO E.D.P.	A-42385-02D1	2	94V-0/P.B.	MATTE TIN OVER NICKEL
15-24-7044	-04D1	4		
15-24-7064	-06D1	6		
NO E.D.P.	-08D1	8		
15-24-7104	-10D1	10		
NO E.D.P.	-12D1	12		
15-24-7144	-14D1	14		
15-24-7184	-16D1	16		
NO E.D.P.	-18D1	18		
NO E.D.P.	-20D1	20		
NO E.D.P.	-22D1	22		
15-24-7244	A-42385-24D1	24	94V-0/P.B.	MATTE TIN OVER NICKEL
NO E.D.P.	A-42385-02D2	2	94V-0/P.B.	30 M.I. SEL. GOLD
15-24-7044	-04D2	4		
15-24-7064	-06D2	6		
NO E.D.P.	-08D2	8		
15-24-7104	-10D2	10		
NO E.D.P.	-12D2	12		
15-24-7144	-14D2	14		
15-24-7184	-16D2	16		
NO E.D.P.	-18D2	18		
NO E.D.P.	-20D2	20		
NO E.D.P.	-22D2	22		
15-24-7244	A-42385-24D2	24	94V-0/P.B.	MATTE TIN OVER NICKEL
NO E.D.P.	A-42385-02A1	2	94V-2/BRASS	MATTE TIN OVER NICKEL
15-24-7040	-04A1	4		
15-24-7060	-06A1	6		
NO E.D.P.	-08A1	8		
15-24-7100	-10A1	10		
NO E.D.P.	-12A1	12		
15-24-7140	-14A1	14		
15-24-7160	-16A1	16		
15-24-7180	-18A1	18		
NO E.D.P.	-20A1	20		
NO E.D.P.	-22A1	22		
15-24-7240	A-42385-24A1	24	94V-2/BRASS	MATTE TIN OVER NICKEL
NO E.D.P.	A-42385-02A2	2	94V-2/BRASS	30 M.I. SEL. GOLD
15-24-7042	-04A2	4		
15-24-7062	-06A2	6		
NO E.D.P.	-08A2	8		
15-24-7102	-10A2	10		
NO E.D.P.	-12A2	12		
15-24-7142	-14A2	14		
15-24-7162	-16A2	16		
15-24-7182	-18A2	18		
NO E.D.P.	-20A2	20		
NO E.D.P.	-22A2	22		
15-24-7242	A-42385-24A2	24	94V-2/BRASS	30 M.I. SEL. GOLD
NO E.D.P.	A-42385-02C1	2	94V-2/P.B.	MATTE TIN OVER NICKEL
15-24-7044	-04C1	4		
15-24-7064	-06C1	6		
NO E.D.P.	-08C1	8		
15-24-7104	-10C1	10		
NO E.D.P.	-12C1	12		
15-24-7144	-14C1	14		
15-24-7184	-16C1	16		
NO E.D.P.	-18C1	18		
NO E.D.P.	-20C1	20		
NO E.D.P.	-22C1	22		
15-24-7244	A-42385-24C1	24	94V-2/P.B.	MATTE TIN OVER NICKEL
NO E.D.P.	A-42385-02C2	2	94V-2/P.B.	30 M.I. SEL. GOLD
15-24-7044	-04C2	4		
15-24-7064	-06C2	6		
NO E.D.P.	-08C2	8		
15-24-7104	-10C2	10		
NO E.D.P.	-12C2	12		
15-24-7144	-14C2	14		
15-24-7184	-16C2	16		
NO E.D.P.	-18C2	18		
NO E.D.P.	-20C2	20		
NO E.D.P.	-22C2	22		
15-24-7244	A-42385-24C2	24	94V-2/P.B.	MATTE TIN OVER NICKEL

DIMENSION STYLE IN/MM	DRAWN BY RJF	DATE 1988/12/09	THIS DRAWING CONTAINS INCORPORATED AND SH
	CHECKED BY JTR	DATE 1988/12/09	
	APPROVED BY FSMITH	DATE 2010/11/22	
	MATERIAL NO. SEE CHART		
	SIZE C		

GENERAL TOLERANCES (UNLESS SPECIFIED)	mm	INCH
4 PLACES	± ---	± ---
3 PLACES	± ---	± .010
2 PLACES	± 0.25	± .015
1 PLACE	± 0.38	± ---
0 PLACE	±	±
ANGULAR	± 5 °	

DRAFT WHERE APPLICABLE MUST REMAIN WITHIN DIMENSIONS

QUALITY SYMBOLS

REV	DESCRIPTION
X	SEE SHEET 1

EC NO: UCP2016-4771
DRWN:CSLAFTER 2016/06/13
CH'KD:JBELL 2016/13/06
APPR:FSMITH 2016/07/19

hb_frame_C_P_AM_T
Rev. G 2012/01/11

PART NUMBER	ENG. NUMBER	CKT. SIZE	HSG./TERM. MATERIAL	TERMINAL PLATING
NO E.D.P.	A-42385-02C4	2	94V-2/P.B.	50 M.I. SEL. GOLD
NO E.D.P.	-04C4	4		
NO E.D.P.	-06C4	6		
NO E.D.P.	-08C4	8		
NO E.D.P.	-10C4	10		
NO E.D.P.	-12C4	12		
NO E.D.P.	-14C4	14		
NO E.D.P.	-16C4	16		
NO E.D.P.	-18C4	18		
NO E.D.P.	-20C4	20		
NO E.D.P.	-22C4	22		
NO E.D.P.	A-42385-24C4	24	94V-2/P.B.	50 M.I. SEL. GOLD
NO E.D.P.	A-42385-02A4	2	94V-2/BRASS	50 M.I. SEL. GOLD
15-24-3048	-04A4	4		
NO E.D.P.	-06A4	6		
NO E.D.P.	-08A4	8		
NO E.D.P.	-10A4	10		
NO E.D.P.	-12A4	12		
NO E.D.P.	-14A4	14		
NO E.D.P.	-16A4	16		
NO E.D.P.	-18A4	18		
NO E.D.P.	-20A4	20		
NO E.D.P.	-22A4	22		
NO E.D.P.	A-42385-24A4	24	94V-2/BRASS	50 M.I. SEL. GOLD

PART NUMBER	ENG. NUMBER	CKT. SIZE	HSG./TERM. MATERIAL	TERMINAL PLATING
NO E.D.P.	A-42385-02D4	2	94V-0/P.B.	50 M.I. SEL. GOLD
NO E.D.P.	-04D4	4		
NO E.D.P.	-06D4	6		
NO E.D.P.	-08D4	8		
NO E.D.P.	-10D4	10		
NO E.D.P.	-12D4	12		
NO E.D.P.	-14D4	14		
NO E.D.P.	-16D4	16		
NO E.D.P.	-18D4	18		
NO E.D.P.	-20D4	20		
NO E.D.P.	-22D4	22		
NO E.D.P.	A-42385-24D4	24	94V-0/P.B.	50 M.I. SEL. GOLD
NO E.D.P.	A-42385-02B4	2	94V-0/BRASS	50 M.I. SEL. GOLD
NO E.D.P.	-04B4	4		
NO E.D.P.	-06B4	6		
NO E.D.P.	-08B4	8		
NO E.D.P.	-10B4	10		
NO E.D.P.	-12B4	12		
NO E.D.P.	-14B4	14		
NO E.D.P.	-16B4	16		
NO E.D.P.	-18B4	18		
NO E.D.P.	-20B4	20		
NO E.D.P.	-22B4	22		
NO E.D.P.	A-42385-24B4	24	94V-0/BRASS	50 M.I. SEL. GOLD

SEE SHEET 1
EC NO: UCP2016-4771
DRWN:CSLAFTER 2016/06/13
CH'KD:JBELL 2016/13/06
APPR:FSMITH 2016/07/19
X5

REV	DESCRIPTION

QUALITY SYMBOLS

GENERAL TOLERANCES (UNLESS SPECIFIED)

	mm	INCH
4 PLACES	± ---	± ---
3 PLACES	± ---	± .010
2 PLACES	± 0.25	± .015
1 PLACE	± 0.38	± ---
0 PLACE	±	±
ANGULAR	± 5 °	

DRAFT WHERE APPLICABLE MUST REMAIN WITHIN DIMENSIONS

DIMENSION STYLE
IN/MM

		DATE
DRAWN BY	RJF	1988/12/09
CHECKED BY	JTR	1988/12/09
APPROVED BY	FSMITH	2010/11/22

MATERIAL NO. SEE CHART

SIZE C

THIS DRAWING CONTAINS INFORMATION INCORPORATED AND SI

tb_frame_C_P_AM_T
Rev. G 2012/01/11

Looking for pricing, stock, or lifecycle information?

Click below to explore more details on WIN SOURCE:

- View 0015247240 on WIN SOURCE
- Molex, LLC Information

Optimize Your Supply Chain with WIN SOURCE Solutions

- Global Sourcing Solution
- Obsolete Management
- Cost Control Management
- Shortage Management
- Alternative Solution
- Excess Inventory Management