THE DATASHEET OF

109P0424H6D01

www.win-source.net 0086-755-83957316

SANYO DENKI

San Ace Cooling Fan

DC Fan / ACDC Fan / AC Fan

2024-2025

English

San Ace New/Recommended Products

NEW

DC DC Fan

The 9RA type lineup has been expanded. This fan is ideal for cooling industrial equipment, medical equipment, servers, and other applications that require low noise and low power consumption.
The product lineup is available in a wide variety in 12/24/48 voltage, cooling performance, noise level, and PWM control. This allows users to choose the most suitable one for their applications.

San Ace 92 9RA type
92×92×38 mm
pp. 149 to 153

NEW

DC Long Life Fan

The Long Life Fan lineup has been expanded. The added fans deliver improved airflow performance while maintaining the size of their predecessors* and a long service life of 100,000 hours. Also, the PWM control enables the control of fan speed, contributing to lowering noise and improving energy efficiency of devices.
It is suitable for cooling equipment that requires high reliability such as servers, ICT equipment, and telecom power supplies.

San Ace 40L 9LG type
40×40×28 mm
pp. 368 to 370

San Ace 60L 9CRLB type
60×60×76 mm
pp. 378 to 379

*The predecessor of the San Ace 40L 9LG type is the 40 × 40 × 28 mm San Ace 40L 9L type Long Life Fan (model: 9L0412J301).
The predecessor of the San Ace 60L 9CRLB type is the 60 × 60 × 76 mm San Ace 60L 9CRLA type Long Life Fan.

Airflow Tester pp. 584 to 587

This is a portable measuring device that enables you to easily measure the system impedance and operating airflow of devices.

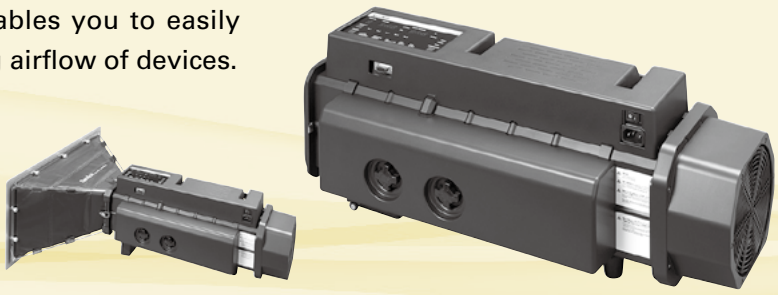

We offer more products with various features available. See the rest of the catalog for more.

NEW

ACDC ACDC Fan

The ACDC Fan lineup has been expanded.
With an embedded AC-DC converter, this fan runs on AC power without needing a DC power supply.
DC fans' advantages such as low power consumption and long life can be enjoyed while being AC-powered, making it ideal for control panels, general industrial machinery, and medical equipment.

San Ace 120AD 9AD type
120 × 120 × 25 mm
pp. 493 to 495

San Ace Controller pp. 576 to 579

This controller can perform control and remote monitoring of PWM fans.
It can optimize the airflow and static pressure of fans by controlling individual fan speeds from a computer or smartphone.
Combined with option sensors, the controller can measure air temperature and pressure for automatic fan speed control.
It can monitor and control fans in remote locations via a cloud server, adding new value to customers' equipment such as failure detection and preventive maintenance capabilities.

PWM Controller pp. 580 to 583

The PWM Controller is a product that remotely controls the speed of a PWM fan. By using this product, PWM fans can be fully utilized without preparing a new circuit, contributing to reducing the system power consumption and noise level.

Box type

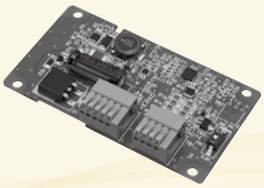

PCB type

Why are San Ace fans chosen?

High Quality and High Reliability

Our products are made of high-quality materials and undergo rigorous quality assurance testing. They are designed and manufactured by experienced engineers and professionals to achieve high reliability.

Rich Lineup

They are available in a wide range of size, shape, and performance to meet various needs. Also, we specialize in customization tailored to customer needs.

DC Fan

DC Fan

The lineup offers a number of products with features such as low power consumption, low noise, high airflow, and high static pressure.
They are suitable for a variety of applications including air blowing, ventilation, and cooling.

Counter Rotating Fan

This fan features high static pressure and can blow straight air, and therefore is suitable for cooling high-density devices and for cooling by blowing air directly.

Reversible Flow Fan

This fan can switch forward/reverse air directions, delivering nearly the same airflow and static pressure for both. It is ideal for home ventilation systems and other applications where two intake and exhaust fans are used.

Splash Proof Fan

Fans with excellent water and dust protection. They can be used outdoors and in environments with water splashes and dust.

Splash Proof Centrifugal Fan

Centrifugal fans with excellent water and dust resistance. They are used in high-density equipment and outdoor equipment.

Splash Proof Blower

These blowers send out air in a 90° direction from the intake direction, changing the direction of air without an external duct. Featuring superb water and dust protection, they can be used outdoors and in environments with water splashes and dust.

ACDC Fan

This fan internally converts AC power to DC power. DC fan advantages such as low power consumption and long life can be enjoyed while being AC-powered. Unlike AC fans, whose performance depends on the power source conditions, this fan runs at a constant speed regardless of the input voltage and frequency.

Used everywhere in society

In addition to cooling, we offer a variety of fans suitable not only for cooling but also for air ventilation and circulation, air blowing, and suction applications.

In convenience stores...

ATM

For cooling the housing and paper currency detector.
San Ace 80 / San Ace 60T

Refrigerated showcase

For circulating cool air through a showcase.
San Ace 120W

Coffee maker

For removing humidity inside the device through ventilation.
San Ace B52

Copier

For cooling inside a copier and holding paper by air suction.
San Ace B97 / San Ace 80

Surveillance camera

For exhausting the heat generated from PCB.
San Ace 40

Environmentally Friendly

Our fans are eco-designed and offer energy savings. They are compliant with RoHS Directive and made environmentally friendly.

Short Lead Time Service

Short Lead Time Service is available for the prompt delivery of our products.
Please contact your point of sale for details.

Oil Proof Fan

The windings and electronic components are protected by oil-resistant materials, which ensures stable operation in oil mist environments. This fan is ideal for factory automation applications, such as industrial equipment, machine tools, and industrial robots.

Long Life Fan

This fan features a long life expectancy of up to 180,000 hours and is suitable for telecom equipment, servers, and industrial equipment that needs to operate without maintenance for extended periods of time.

Wide Temperature Range Fan

This fan features a wide operating temperature range of -40 to +85°C. This makes it suitable for many applications, from low temperature refrigerators and freezers to high temperature lighting equipment.

G Proof Fan

This fan is designed to withstand G-forces of up to 735 m/s^2 (75 G) for 1,000 hours.
It is suitable for such devices as CT scanners, which are subjected to high levels of G-force.

Centrifugal Fan

These fans blow air in a centrifugal course. Featuring excellent airflow and static pressure, they are suitable for cooling compact, high-density devices, such as servers.

Blower

These blowers send out air in a 90° direction from the intake direction, changing the direction of air without an external duct. Featuring high static pressure, Blowers are ideal for spot cooling applications and cooling high-density equipment.

AC Fan

These are cooling fans that operate on AC power. The lineup is available in 100, 115, 200, and 230 V models. They are suitable for a various applications including ICT equipment, control panels, and general facilities.

In hospitals...

CT scanner

For preventing image distortion caused by high temperatures within the gantry.
San Ace 120L

Air mattress

For removing moisture in an air mattress through ventilation.
San Ace B76

Powder packing machine

For suctioning the powder in the air when filling pharmaceutical powder.
San Ace B76

Medical ultrasound equipment

Cooling control boards.
San Ace 120

In food factories...

Air showers

For blowing filtered clean air.
San Ace C175

Inspection equipment

For exhausting heat generated by an x-ray generator.
San Ace 60

Palletizing robot

For exhausting heat from control panels.
San Ace 120AD

Domain Diagram ····· 8 to 11
Eco Products ····· 12

DC
DC Fan 13 to 206
Counter Rotating Fan 207 to 244
Reversible Flow Fan 245 to 254
Splash Proof Fan 255 to 314
Splash Proof Centrifugal Fan 315 to 340
Splash Proof Blower 341 to 344
Oil Proof Fan 345 to 366
Long Life Fan 367 to 416
Wide Temperature Range Fan 417 to 430
G Proof Fan 431 to 436
Centrifugal Fan 437 to 464
Blower 465 to 488

ACDC
ACDC Fan 489 to 540

AC
AC Fan 541 to 575

San Ace Controller 576 to 579
PWM Controller 580 to 583
Airflow Tester 584 to 587

Options ····· 588 to 605
Technical Material
Overview and Characteristics of Fan ··· 606 to 607
Motor Protection ····· 608
Guideline in Selecting a Fan ····· 609
Specifications for DC Fan Sensors ··· 610 to 611
Specifications for ACDC Fan Sensors ····· 612
EMC Conditions for ACDC Fans ····· 613
Specifications for AC Fan Sensor ····· 614
Fans with PWM Control ····· 615 to 616
Splash Proof Fan ····· 617
Cautions for Use of a Cooling Fan in the Vicinity of a Power Switching Circuit ··· 618 to 619

Standards and Certifications
Safety Standards ····· 620 to 621
RoHS Directive Compliance ····· 621
Please Read:
Operating Precautions ····· 622
Fan Mounting Using Self-tapping Screw ··· 623
Safety Precautions ····· 624 to 633
Model Index in Ascending Order
DC Fans ····· 634 to 653
ACDC Fans ····· 654 to 655
AC Fans ····· 656 to 657
Options ····· 658 to 659
Deleted Models in this Catalog ··· 660 to 661
List of Group Companies and Offices/Distributors ····· 662 to 663

Short Lead Time Service ····· 664

DC Fan
Counter Rotating Fan
Reversible Flow Fan
Splash Proof Fan
Splash Proof Centrifugal Fan
Splash Proof Blower
Oil Proof Fan
Long Life Fan
Wide Temperature Range Fan
G Proof Fan
Centrifugal Fan
Blower
ACDC Fan
AC Fan
San Ace Controller
PWM Controller
Airflow Tester
Options
Technical Material
Standards and Certifications
Please Read
Model Index in Ascending Order
Deleted Models in this Catalog
List of Group Companies and Offices/Distributors
Short Lead Time Service

DC Fan

DC

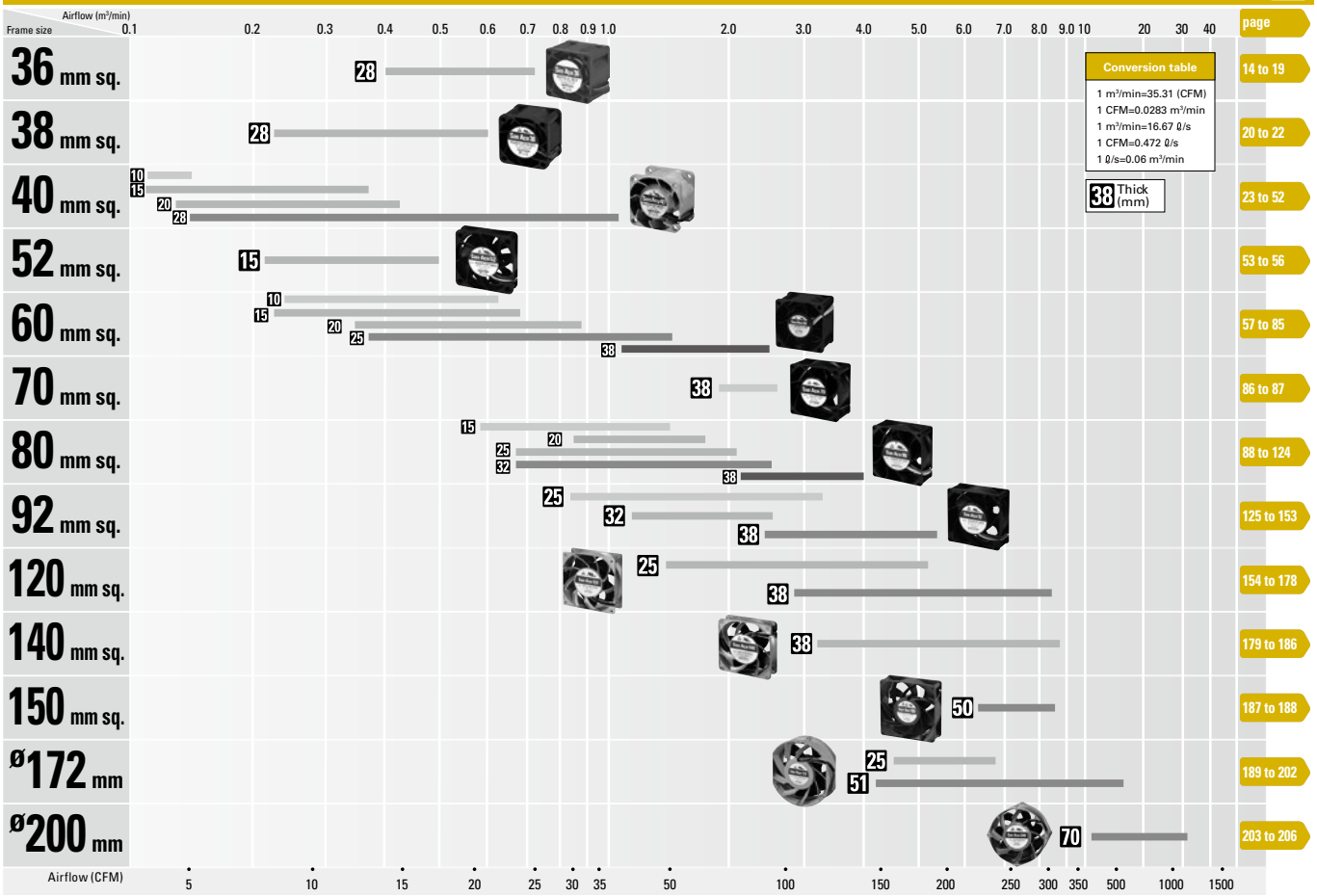

Counter Rotating Fan

DC

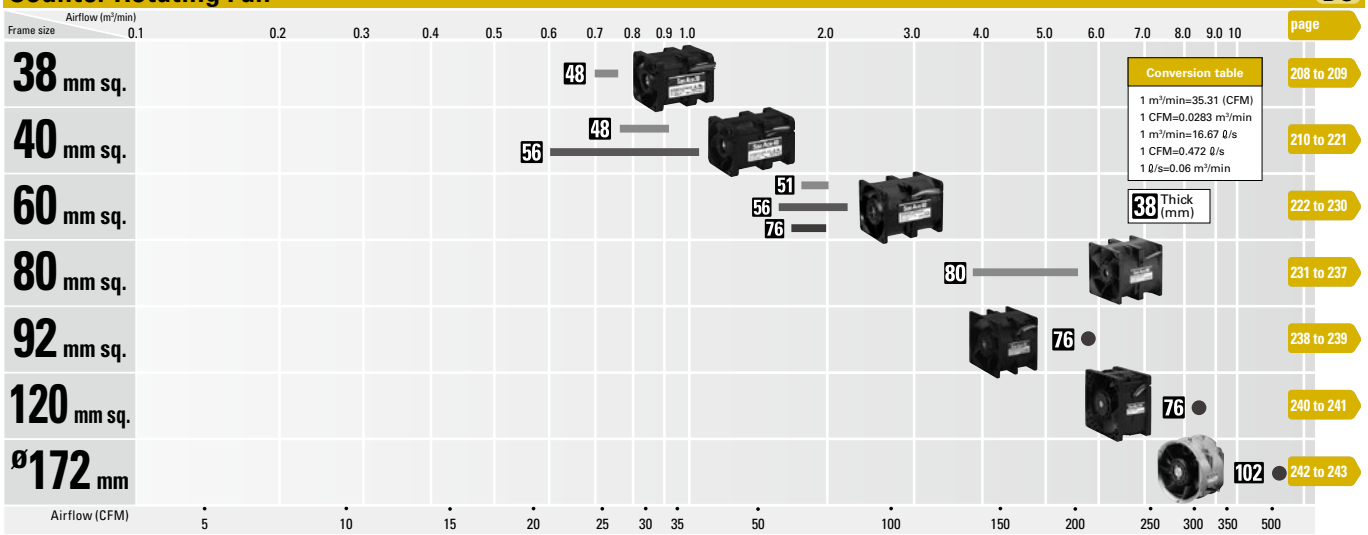

Reversible Flow Fan

DC

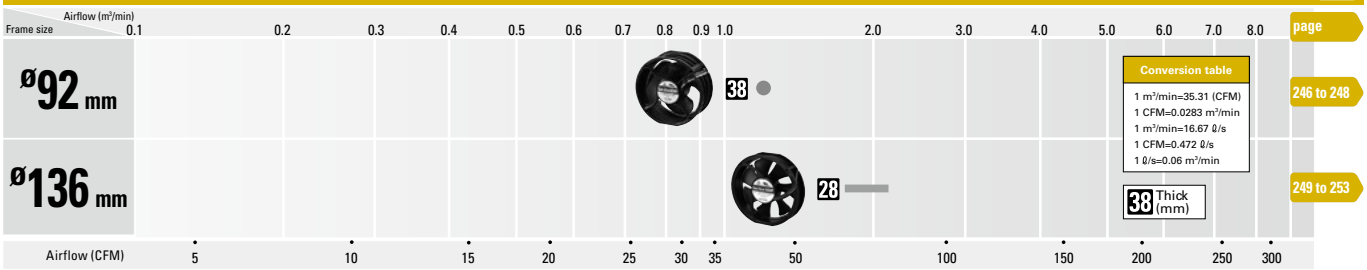

Splash Proof Fan

DC

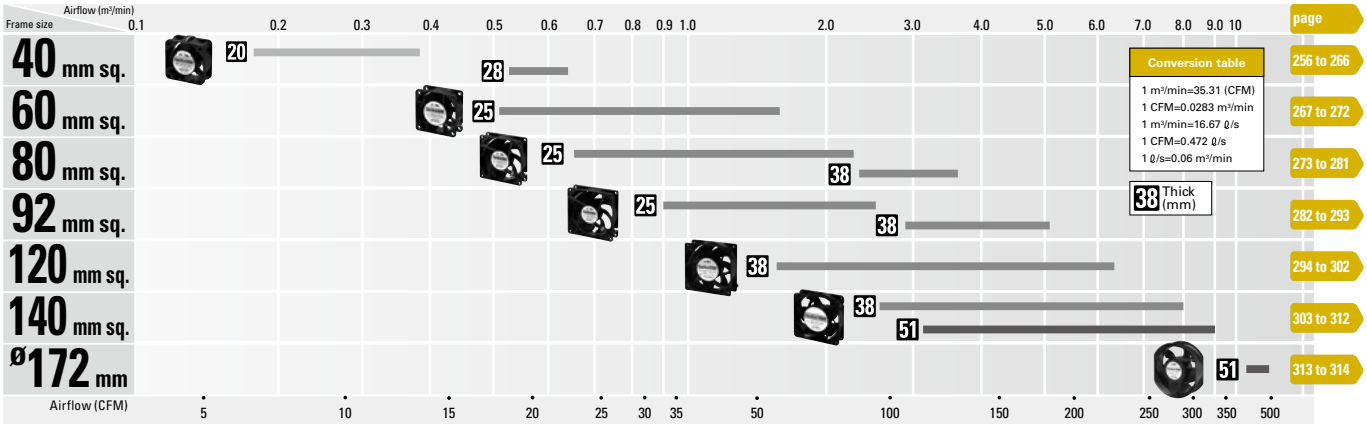

Splash Proof Centrifugal Fan

DC

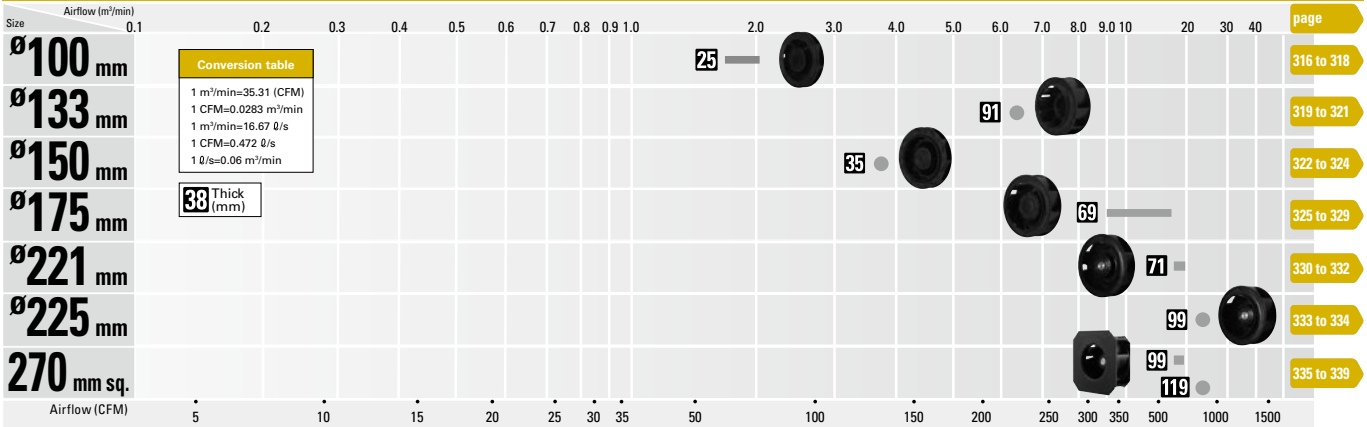

Splash Proof Blower

DC

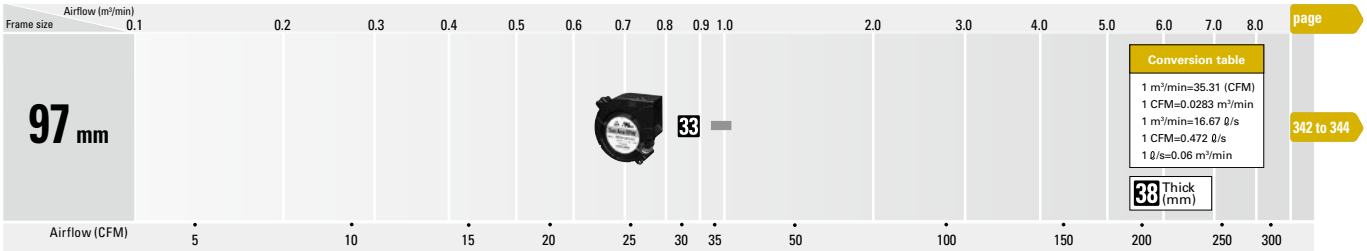

Oil Proof Fan

DC

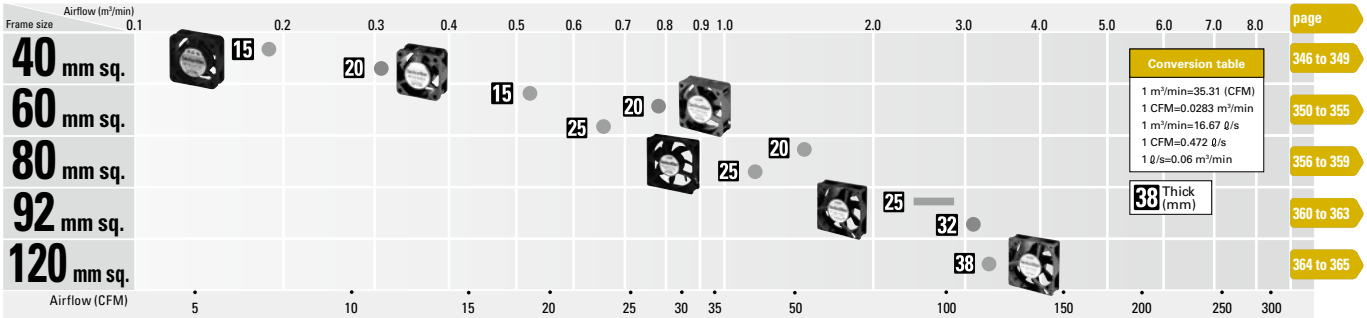

Long Life Fan

DC

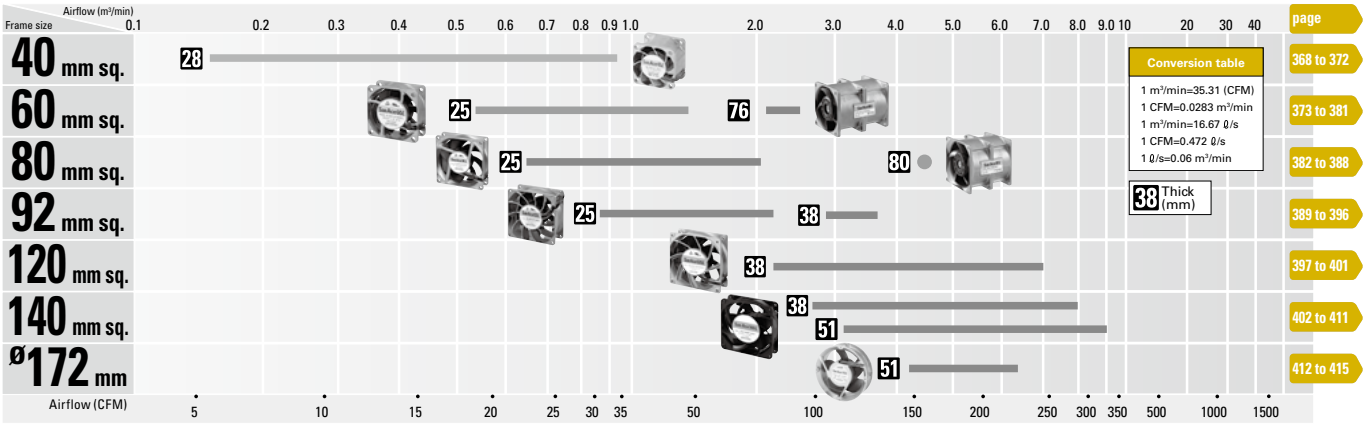

Wide Temperature Range Fan

DC

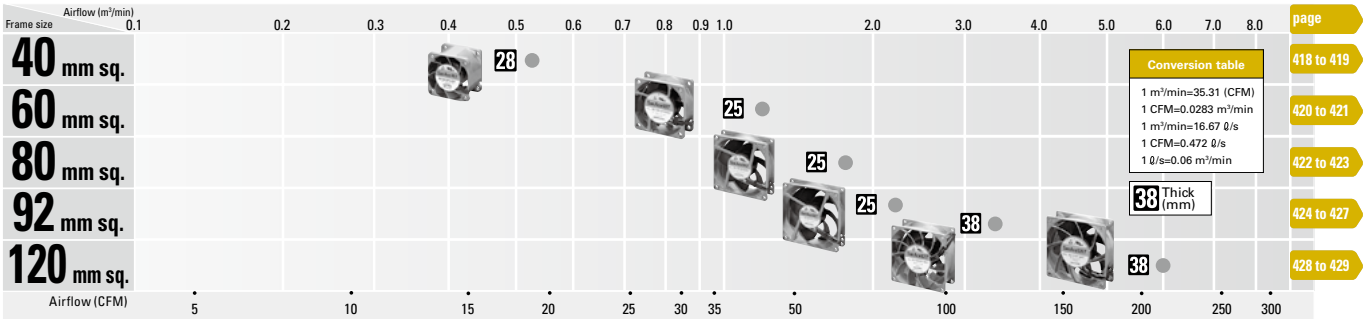

G Proof Fan

DC

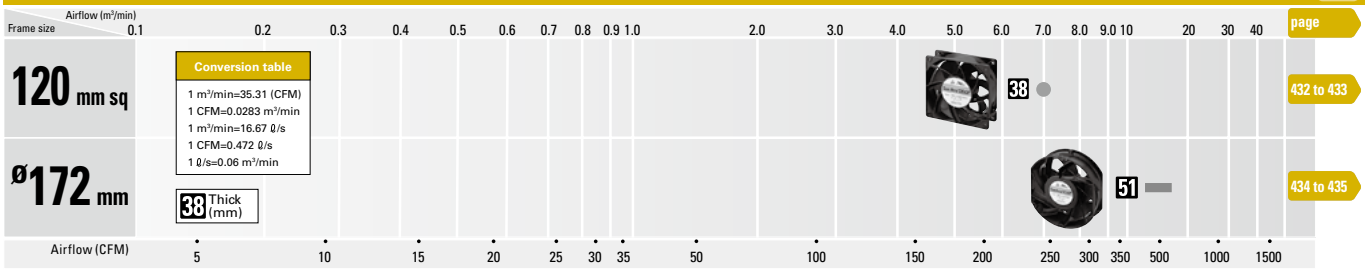

Centrifugal Fan

DC

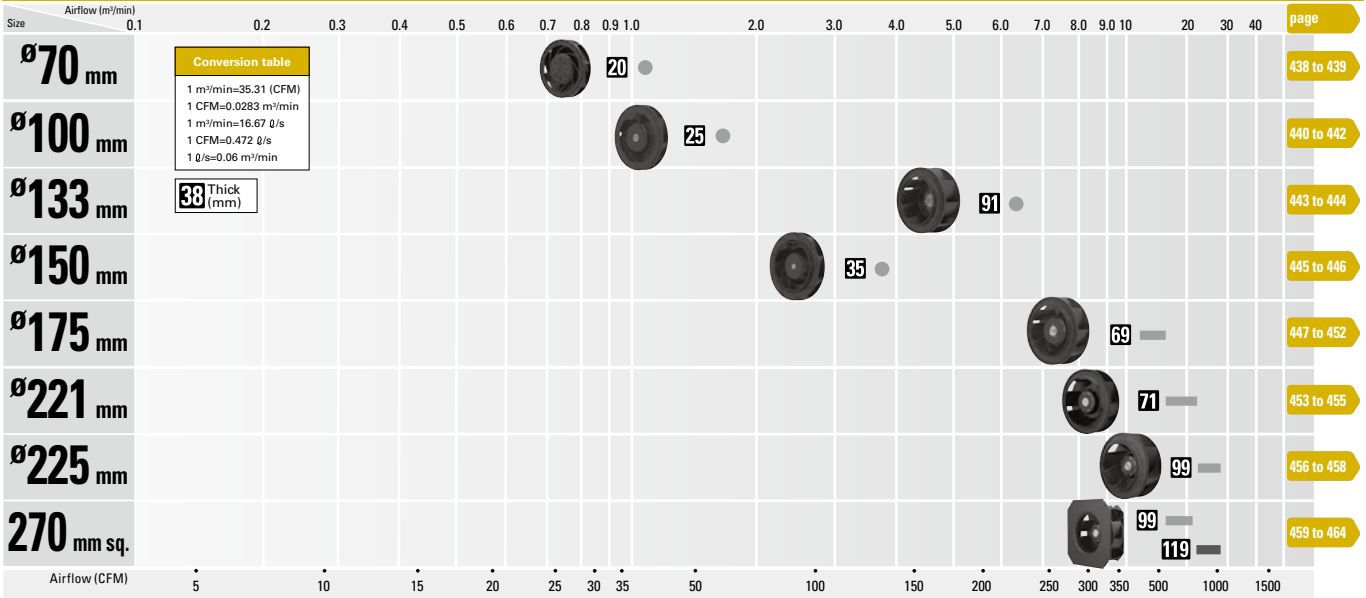

Blower

DC

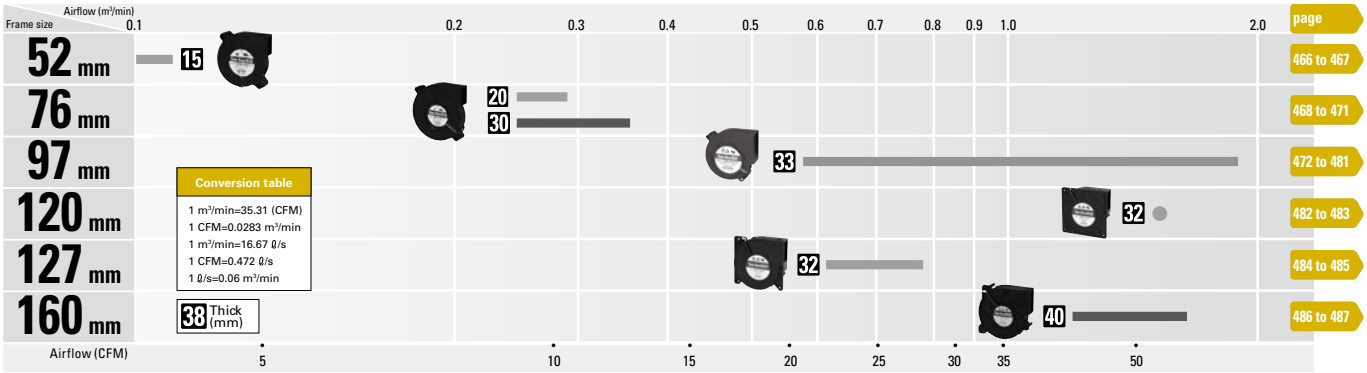

ACDC Fan

AC

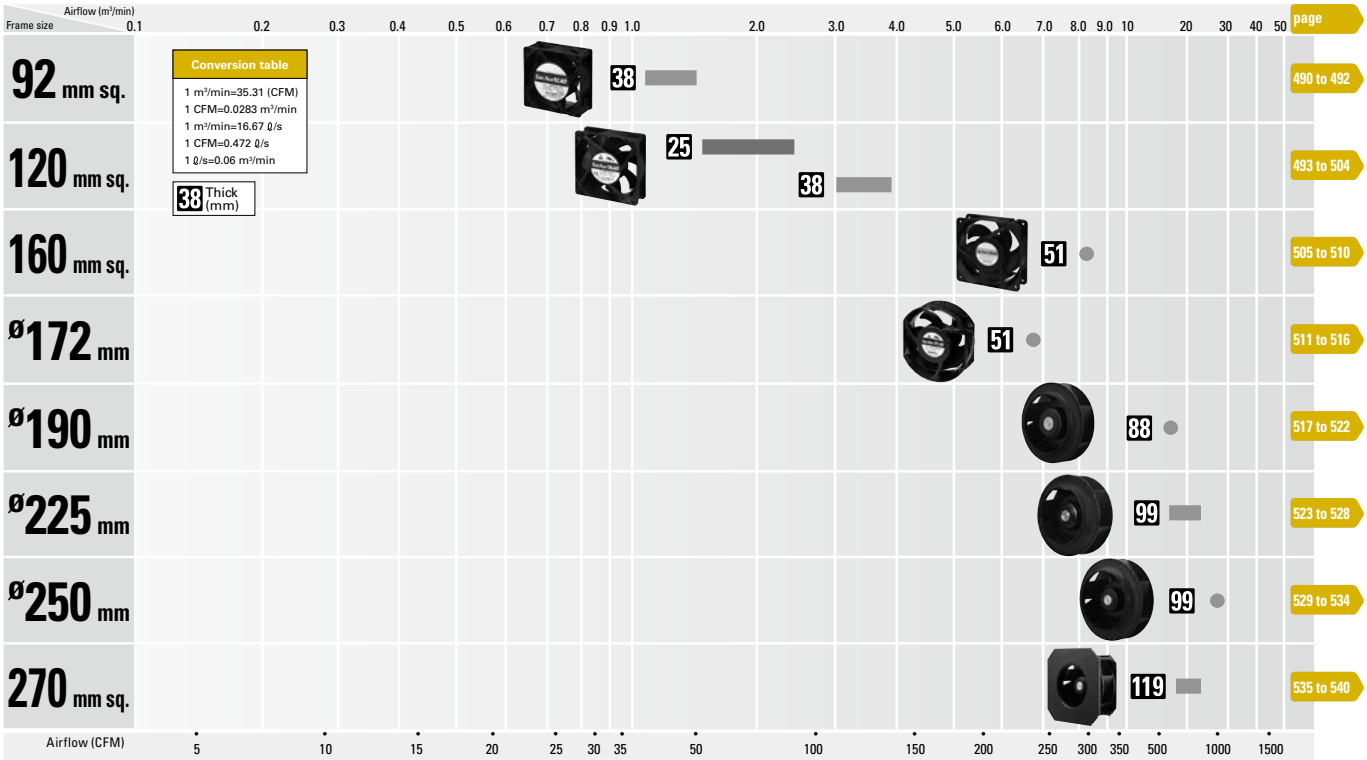

AC Fan

AC

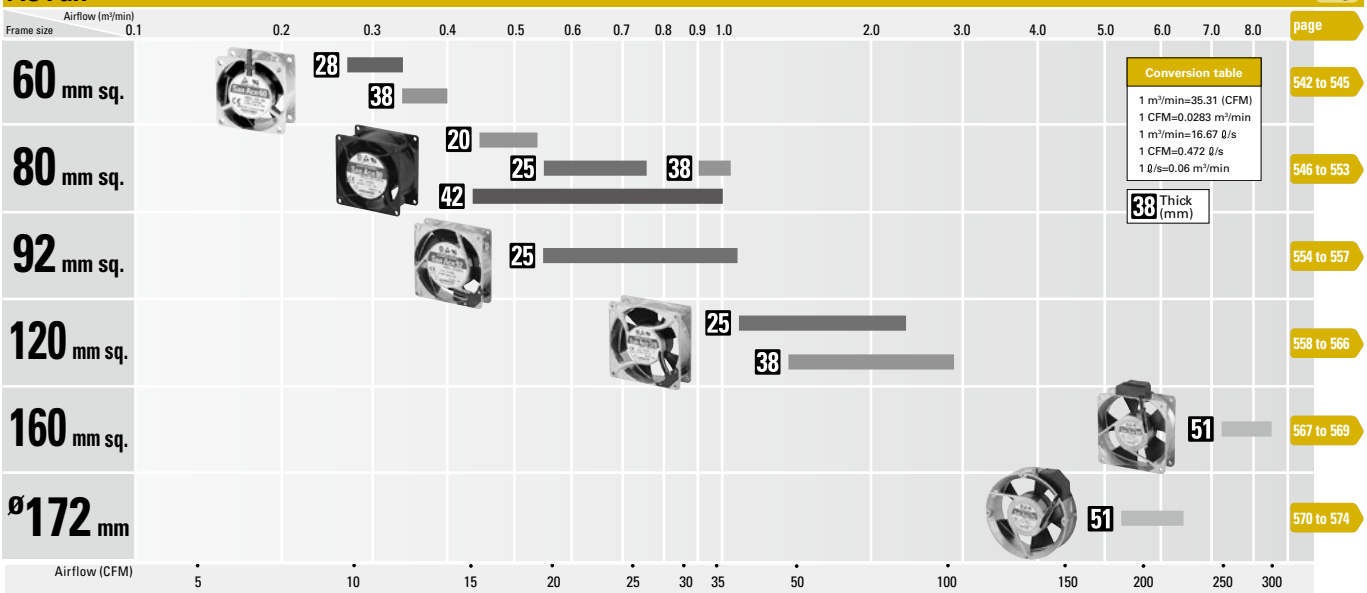

Eco Products—Compliant with Eco-design

Efforts for eco-design

In the design phase of product development, we incorporate the latest energy-saving technologies into new products. The environmental impact of a product is assessed in each of the following stages: parts/materials procurement, manufacturing, distribution, use, recycling, and disposal.

Eco Products are eco-friendly products designed to reduce the environmental impact of the product and its packaging materials compared to conventional products on the market.

Our products are assessed over the product's life cycle against our own eco-design requirements including product size, weight, power consumption, and CO_2 emissions, and those meeting our standards and higher standards qualify as Eco Products and Eco Products Plus, respectively.

ECO PRODUCTS

Implementation of Life Cycle Assessment (LCA)

Life Cycle Assessment (LCA) is a method to quantitatively evaluate the environmental impact of a product throughout its life cycle.

We evaluate the environmental compatibility of our products using LCA. The LCA implementation rate of our Eco Products in 2022 is 100%.

DC Fan

The lineup offers a number of products with different features including the 9GA type Low Power Consumption Fans, the 9S type Silent Fans, and the 9HV type High Static Pressure Fans.

Model Numbering System

Not every combination of the following codes or characters is available. Contact us for an available combination.

9GV	12	12	J	1	01	1
Type name	Frame size	Voltage	Speed code	Frame thickness	Sensor specifications	Frame form

Fans with PWM control

9GV	12	12	P	4	G	01	
Type name	Frame size	Voltage	PWM control	Frame thickness	Speed code	Individual customer's spec (2 to 4 digits)	Frame form

Type name	9GA 9GV 9HV etc.
Frame size (mm)	03 (38×38), 04 (40×40), 05 (52×52), 06 (60×60), 08 (80×80), 09 (92×92), 12 (120×120), 13 (127×127), 14 (140×140), 15 (150×150), 17 (ø172), 36 (36×36), 47 (ø172×147 (sidecut)), 57 (ø172×150 (sidecut)), 20 (ø200)
Voltage (V)	05 (5), 12 (12), 24 (24), 48 (48) etc.
Speed code	A B C D E F G H J K L M S W etc.
Frame thickness (mm)	0 (70), 1 (38), 2 (32), 3 (28), 4 (25), 5 (50, 51), 6 (20), 7 (15), 9 (10)
Sensor specifications	01 or 001: With a pulse sensor 02 or 002: Without a sensor D01 or D001: With a lock sensor
Frame form	Nil: Plastic frame: Ribbed frame, Aluminum frame: Ribless frame 1: Plastic frame: Ribless frame 3: 40 × 40 × 28 mm for 1U applications, Plastic frame: Ribbed frame

How to Read Specifications (DC fan)

The following is a sample. See respective product pages for detailed information.

Model no.	Rated voltage [V]	Operating voltage range [V]	Rated current [A]	Rated input [W]	Rated speed [min⁻¹]	Max. airflow [m³/min]	Max. airflow [CFM]	Max. static pressure [Pa]	Max. static pressure [inchH₂O]	SPL [dB (A)]	Operating temperature [°C]	Expected life [h]
9GA0412G7001	12	7 to 13.8	0.17	2.04	13100	0.36	12.7	192	0.77	42	-20 to +70	40000/60°C (70000/40°C)

Rated voltage ····· This is the necessary voltage to drive the fan. E.g.) 12 VDC, 24 VDC, 48 VDC
Operating voltage range ····· The voltage range over which fan operation is guaranteed.
Rated current ····· The current when the fan is operating at rated voltage (at free air).
Rated input ····· The power value when the fan is operating at rated voltage (at free air).
Rated speed ····· The speed when the fan is operating at rated voltage (at free air).
Max. airflow ····· The airflow at 0 Pa static pressure when the fan is operating at rated voltage. (Measured using the double chamber method)
Max. static pressure ····· The static pressure at 0 m^3/min airflow when the fan is operating at rated voltage. (Measured using the double chamber method)
SPL ····· A-weighted sound pressure level (SPL) when the fan operates at the rated speed.
For the measurement method, see the Technical Materials section in the catalog.
Operating temperature ····· The temperature range over which fan operation is guaranteed (Non-condensing).
Expected life ····· Service life hours that 90% of bearings will survive without failing when continuously operated at the rated voltage and 60°C temperature. Expected life at 40°C is for reference only.
For more information, please refer to the technical material section.

DC Fan

36×36×28 mm

San Ace 36 9HV type

General Specifications

- Material ..... Frame: Plastic (Flammability: UL 94V-0), Impeller: Plastic (Flammability: UL 94V-1)
- Expected life ..... See the table below. (L10 life: 90% survival rate for continuous operation in free air at 60˚C, rated voltage) Expected life at 40°C is for reference only.
- Motor protection function ..... Locked rotor burnout protection, Reverse polarity protection For details, please refer to p. 608.
- Dielectric strength ..... 50/60 Hz, 500 VAC, for 1 minute (between lead wire conductors and frame)
- Insulation resistance ..... 10 MΩ min. at 500 VDC (between lead wire conductors and frame)
- Sound pressure level (SPL) ..... A-weighted sound pressure level (SPL) at 1 m away from the air inlet.
- Storage temperature ..... -30 to +70˚C (Non-condensing)
- Lead wire ..... ⊕Red ⊖Black Sensor Yellow Control Brown
- Mass ..... 53 g

Specifications

The models listed below **have ribs and a pulse sensor with PWM control.**

Model no.	Rated voltage [V]	Operating voltage range [V]	PWM duty cycle* [%]	Rated current [A]	Rated input [W]	Rated speed [min⁻¹]	Max. airflow [m³/min]	Max. airflow [CFM]	Max. static pressure [Pa]	Max. static pressure [inchH₂O]	SPL [dB (A)]	Operating temperature [˚C]	Expected life [h]
9HV3612P3K001	12	10.8 to 13.2	100	1.75	21.0	32500	0.72	25.4	1400	5.62	67	-20 to +60	30000/60˚C (53000/40˚C)
			20	0.05	0.6	6000	0.12	4.2	47.2	0.19	26		

PWM frequency is 25 kHz. Models without ratings for 0% PWM duty cycle have zero speed at 0%. When control terminal is open, speed is the same as at 100% duty cycle.

Note: The » mark indicates Short Lead Time Service applicable models. See p. 664 for details.

Airflow - Static Pressure Characteristics / PWM Duty - Speed Characteristics Example

9HV3612P3K001 With pulse sensor with PWM control

PWM duty cycle

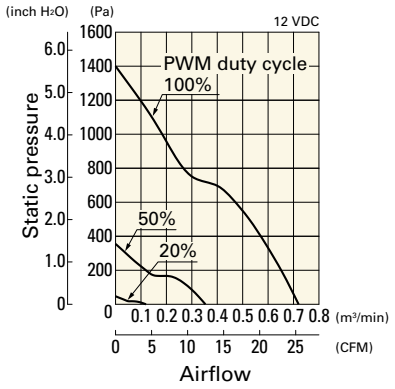

Operating voltage range

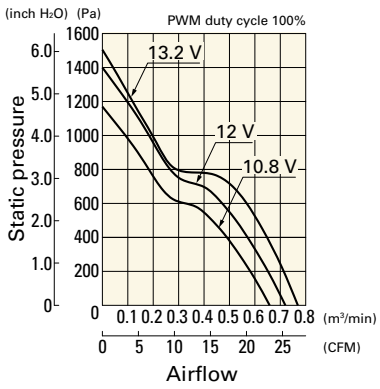

PWM duty - Speed characteristics example

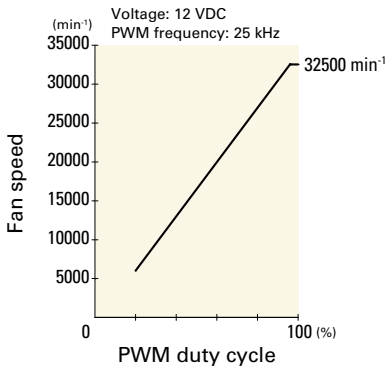

Dimensions (unit: mm)

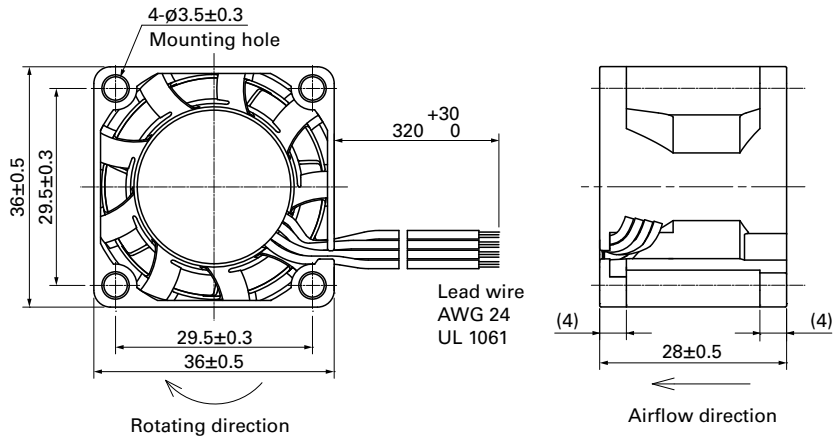

Reference Dimensions of Mounting Holes and Vent Opening (unit: mm)

Inlet side, Outlet side

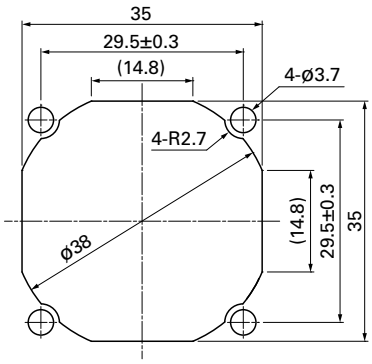

Options

Finger guards page: p. 590

Model no.: 109-1050

DC Fan

36×36×28 mm

San Ace 36 9GX type

General Specifications

- Material ..... Frame: Plastic (Flammability: UL 94V-0), Impeller: Plastic (Flammability: UL 94V-1)
- Expected life ..... See the table below. (L10 life: 90% survival rate for continuous operation in free air at 60˚C, rated voltage) Expected life at 40°C is for reference only.
- Motor protection function ..... Locked rotor burnout protection, Reverse polarity protection For details, please refer to p. 608.
- Dielectric strength ..... 50/60 Hz, 500 VAC, for 1 minute (between lead wire conductors and frame)
- Insulation resistance ..... 10 MΩ min. at 500 VDC (between lead wire conductors and frame)
- Sound pressure level (SPL) ..... A-weighted sound pressure level (SPL) at 1 m away from the air inlet.
- Storage temperature ..... -30 to +70˚C (Non-condensing)
- Lead wire ..... ⊕Red ⊖Black Sensor Yellow Control Brown
- Mass ..... 46 g

Specifications

The models listed below **have ribs and a pulse sensor with PWM control.**

Model no.	Rated voltage [V]	Operating voltage range [V]	PWM duty cycle* [%]	Rated current [A]	Rated input [W]	Rated speed [min⁻¹]	Max. airflow [m³/min]	Max. airflow [CFM]	Max. static pressure [Pa]	Max. static pressure [inchH₂O]	SPL [dB (A)]	Operating temperature [˚C]	Expected life [h]
9GX3612P3K001	12	10.8 to 13.2	100	1.3	15.6	24000	0.69	24.4	838	3.367	66	-10 to +60	40000/60˚C (70000/40˚C)
			0	0.07	0.84	3200	0.09	3.2	14.0	0.056	16		

PWM frequency is 25 kHz. Models without ratings for 0% PWM duty cycle have zero speed at 0%. When control terminal is open, speed is the same as at 100% duty cycle.

Note: Sensor and control options are available for selection. Refer to the table on p. 642.

Airflow - Static Pressure Characteristics / PWM Duty - Speed Characteristics Example

9GX3612P3K001 With pulse sensor with PWM control

PWM duty cycle

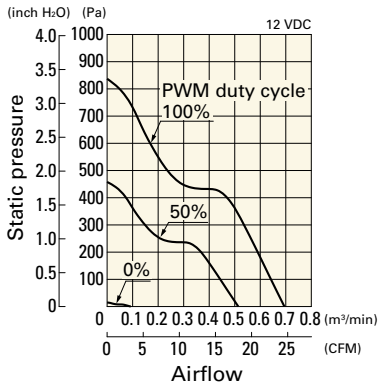

Operating voltage range

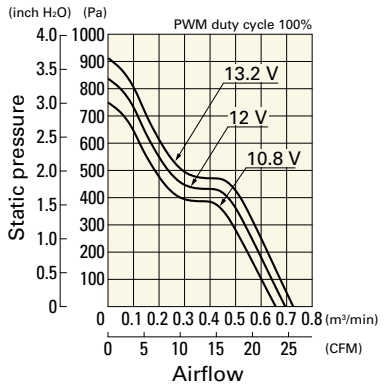

PWM duty - Speed characteristics example

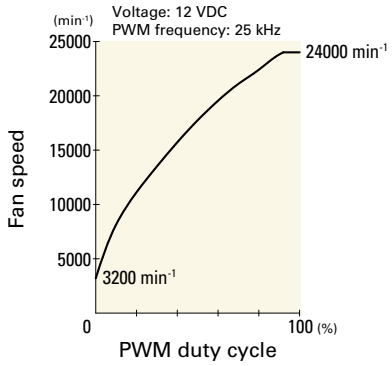

Dimensions (unit: mm)

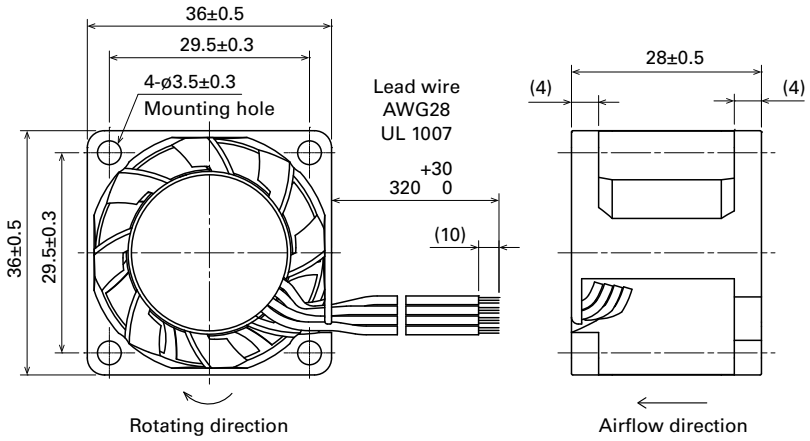

Reference Dimensions of Mounting Holes and Vent Opening (unit: mm)

Inlet side, Outlet side

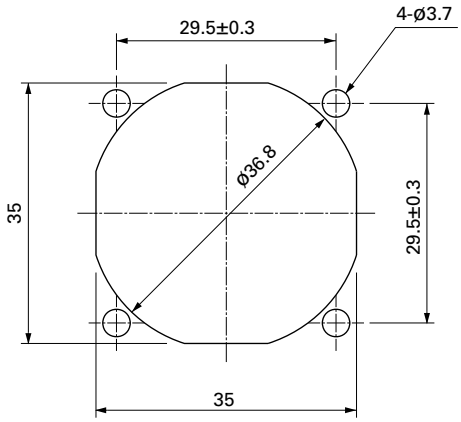

Options

Finger guards page: p. 590

Model no.: 109-1050

DC Fan

36×36×28 mm

San Ace 36 9GV type

General Specifications

- Material ..... Frame: Plastic (Flammability: UL 94V-0), Impeller: Plastic (Flammability: UL 94V-1)
- Expected life ..... See the table below. (L10 life: 90% survival rate for continuous operation in free air at 60˚C, rated voltage) Expected life at 40°C is for reference only.
- Motor protection function ..... Locked rotor burnout protection, Reverse polarity protection For details, please refer to p. 608.
- Dielectric strength ..... 50/60 Hz, 500 VAC, for 1 minute (between lead wire conductors and frame)
- Insulation resistance ..... 10 MΩ min. at 500 VDC (between lead wire conductors and frame)
- Sound pressure level (SPL) ..... A-weighted sound pressure level (SPL) at 1 m away from the air inlet.
- Storage temperature ..... -20 to +70˚C (Non-condensing)
- Lead wire ..... ⊕Red ⊖Black Sensor Yellow Control Brown
- Mass ..... 46 g

Specifications

The models listed below **have ribs and a pulse sensor with PWM control.**

Model no.	Rated voltage [V]	Operating voltage range [V]	PWM duty cycle* [%]	Rated current [A]	Rated input [W]	Rated speed [min⁻¹]	Max. airflow [m³/min]	Max. airflow [CFM]	Max. static pressure [Pa]	Max. static pressure [inchH₂O]	SPL [dB (A)]	Operating temperature [˚C]	Expected life [h]
9GV3612P3J03	12	10.8 to 13.2	100	0.75	9	19000	0.55	19.4	525	2.108	58.5	-10 to +60	40000/60˚C (70000/40˚C)
			0	0.07	0.84	3200	0.08	2.8	15	0.060	16		
9GV3612P3G03			100	0.34	4.08	14000	0.40	14.1	275	1.104	52		
			0	0.06	0.72	3200	0.08	2.8	15	0.060	16		

PWM frequency is 25 kHz. Models without ratings for 0% PWM duty cycle have zero speed at 0%. When control terminal is open, speed is the same as at 100% duty cycle.

Note: Sensor and control options are available for selection. Refer to the table on p. 642.

Airflow - Static Pressure Characteristics / PWM Duty - Speed Characteristics Example

9GV3612P3J03 With pulse sensor with PWM control

PWM duty cycle

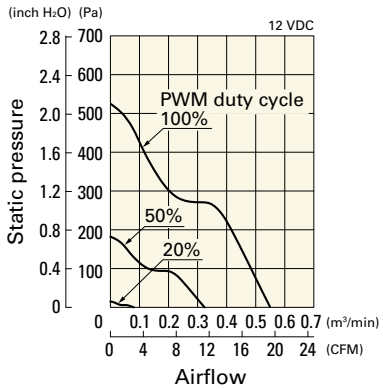

Operating voltage range

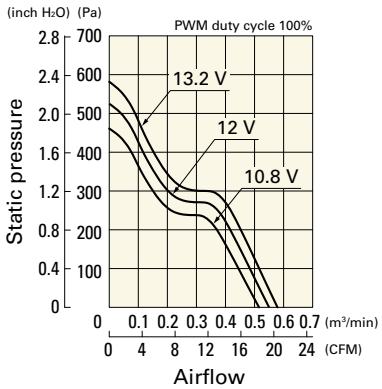

PWM duty - Speed characteristics example

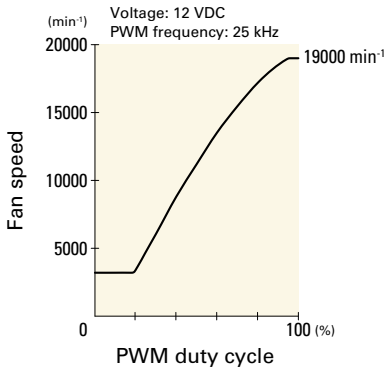

Airflow - Static Pressure Characteristics / PWM Duty - Speed Characteristics Example

9GV3612P3G03 With pulse sensor with PWM control

PWM duty cycle

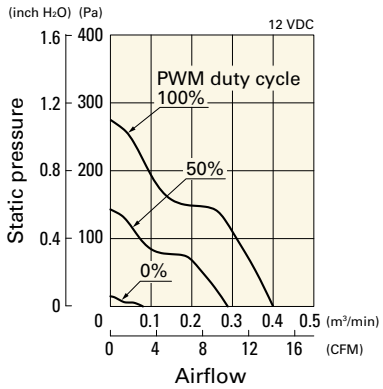

Operating voltage range

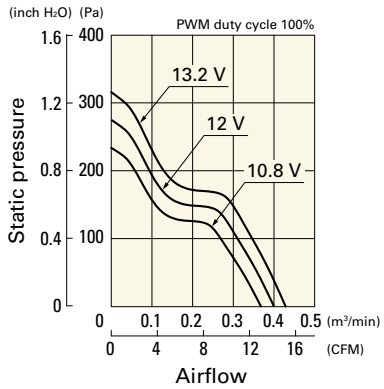

PWM duty - Speed characteristics example

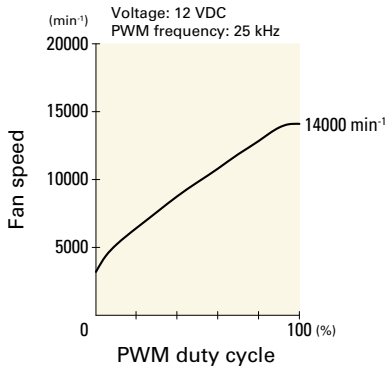

Dimensions (unit: mm)

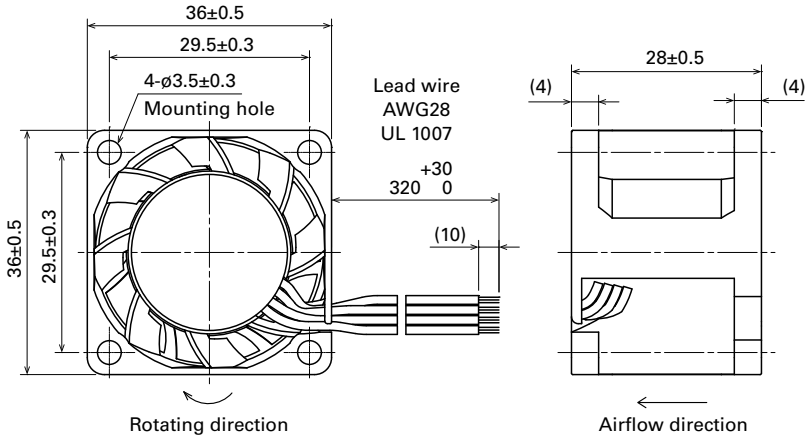

Reference Dimensions of Mounting Holes and Vent Opening (unit: mm)

Inlet side, Outlet side

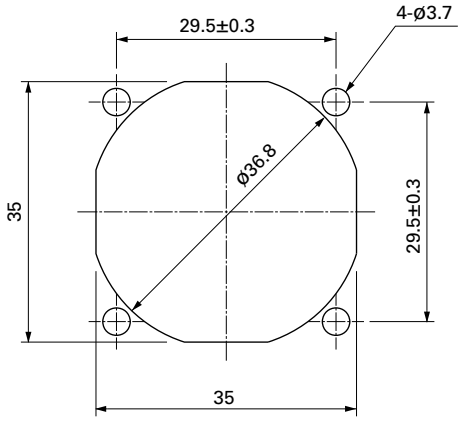

Options

Finger guards page: p. 590

Model no.: 109-1050

DC Fan

38×38×28 mm

San Ace 38 9GA type Low Power Consumption Fan

General Specifications

- Material ..... Frame: Plastic (Flammability: UL 94V-0), Impeller: Plastic (Flammability: UL 94V-0)
- Expected life ..... See the table below. (L10 life: 90% survival rate for continuous operation in free air at 60˚C, rated voltage) Expected life at 40°C is for reference only.
- Motor protection function ..... Locked rotor burnout protection, Reverse polarity protection For details, please refer to p. 608.
- Dielectric strength ..... 50/60 Hz, 500 VAC, for 1 minute (between lead wire conductors and frame)
- Insulation resistance ..... 10 MΩ min. at 500 VDC (between lead wire conductors and frame)
- Sound pressure level (SPL) ..... A-weighted sound pressure level (SPL) at 1 m away from the air inlet.
- Storage temperature ..... -30 to +70˚C (Non-condensing)
- Lead wire ..... ⊕Red ⊖Black Sensor Yellow Control Brown (For models without PWM control, there is no speed control wiring.)
- Mass ..... 52 g

Specifications

The models listed below **have ribs and a pulse sensor with PWM control.** For models without ribs, append "1" to the end of model numbers.

Model no.	Rated voltage [V]	Operating voltage range [V]	PWM duty cycle* [%]	Rated current [A]	Rated input [W]	Rated speed [min⁻¹]	Max. airflow [m³/min]	Max. airflow [CFM]	Max. static pressure [Pa]	Max. static pressure [inchH₂O]	SPL [dB (A)]	Operating temperature [˚C]	Expected life [h]
9GA0312P3K001	12	10.8 to 13.2	100	0.62	7.4	25000	0.6	21.2	800	3.21	59.0	-20 to +70	40000/60˚C (70000/40˚C)
			0	0.06	0.7	3000	0.07	2.5	11	0.04	15.0		
9GA0312P3J001			100	0.52	6.2	23500	0.57	20.1	720	2.89	57.5		
			0	0.06	0.7	3000	0.07	2.5	11	0.04	15.0		
9GA0312P3G001			100	0.33	4.0	19000	0.45	15.9	460	1.85	53.0		
			0	0.06	0.7	3000	0.07	2.5	11	0.04	15.0		

PWM frequency is 25 kHz. Models without ratings for 0% PWM duty cycle have zero speed at 0%. When control terminal is open, speed is the same as at 100% duty cycle.

The models listed below **have ribs and a pulse sensor.** For models without ribs, append "1" to the end of model numbers.

Model no.	Rated voltage [V]	Operating voltage range [V]	Rated current [A]	Rated input [W]	Rated speed [min⁻¹]	Max. airflow [m³/min]	Max. airflow [CFM]	Max. static pressure [Pa]	Max. static pressure [inchH₂O]	SPL [dB (A)]	Operating temperature [˚C]	Expected life [h]
9GA0312E3001	12	10.8 to 13.2	0.18	2.16	14000	0.34	12.0	250	1.0	47	-20 to +70	60000/60˚C (90000/40˚C)
9GA0312H3001			0.09	1.08	9200	0.22	7.77	108	0.43	37		

Note 1: Sensor and control options are available for selection. Refer to the table on p. 637.
Note 2: The » mark indicates Short Lead Time Service applicable models. See p. 664 for details.

Airflow - Static Pressure Characteristics / PWM Duty - Speed Characteristics Example

9GA0312P3K001 With pulse sensor with PWM control

PWM duty cycle

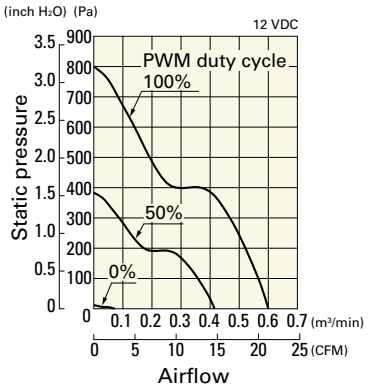

Operating voltage range

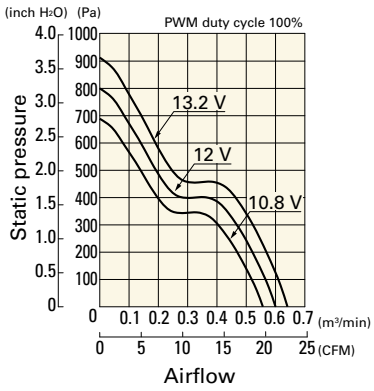

PWM duty - Speed characteristics example

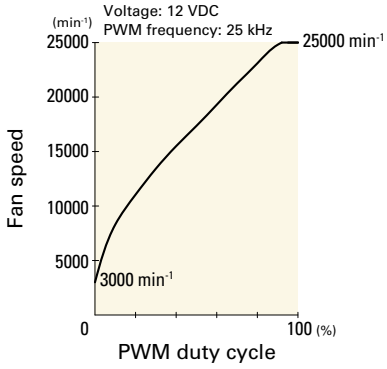

Airflow - Static Pressure Characteristics / PWM Duty - Speed Characteristics Example

9GA0312P3J001 With pulse sensor with PWM control

PWM duty cycle

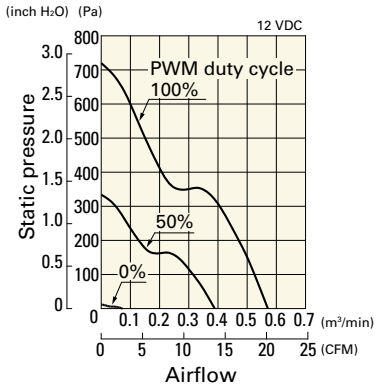

Operating voltage range

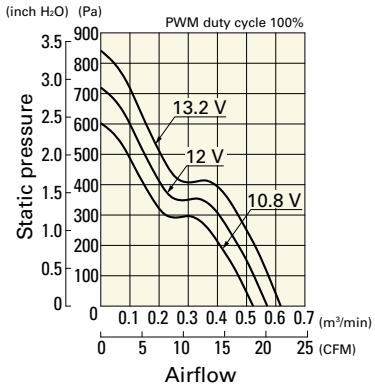

PWM duty - Speed characteristics example

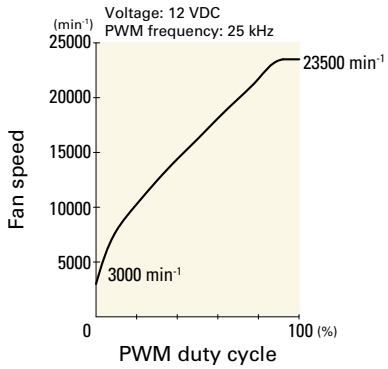

9GA0312P3G001 With pulse sensor with PWM control

PWM duty cycle

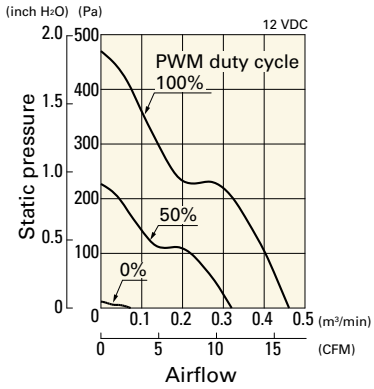

Operating voltage range

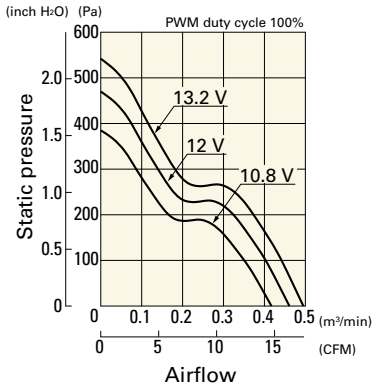

PWM duty - Speed characteristics example

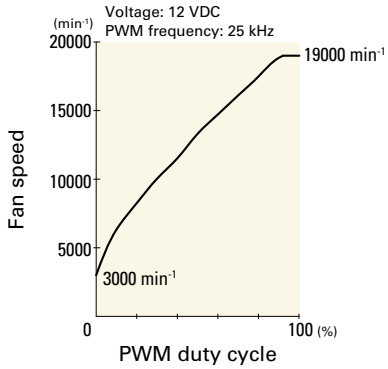

Airflow - Static Pressure Characteristics

9GA0312E3001 With pulse sensor

Operating voltage range

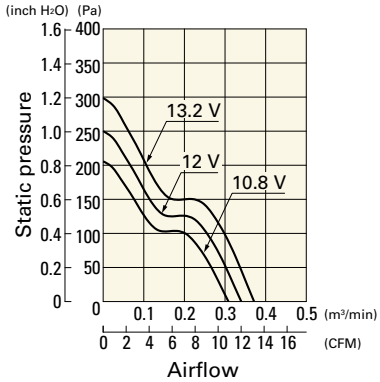

9GA0312H3001 With pulse sensor

Operating voltage range

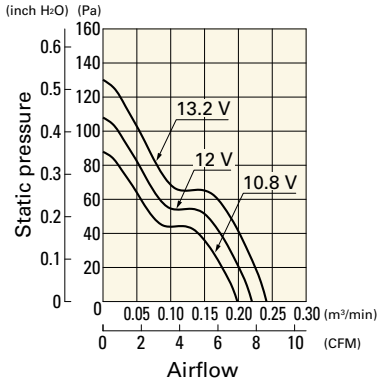

Dimensions (unit: mm) (Ribbed frame with pulse sensor with PWM control)

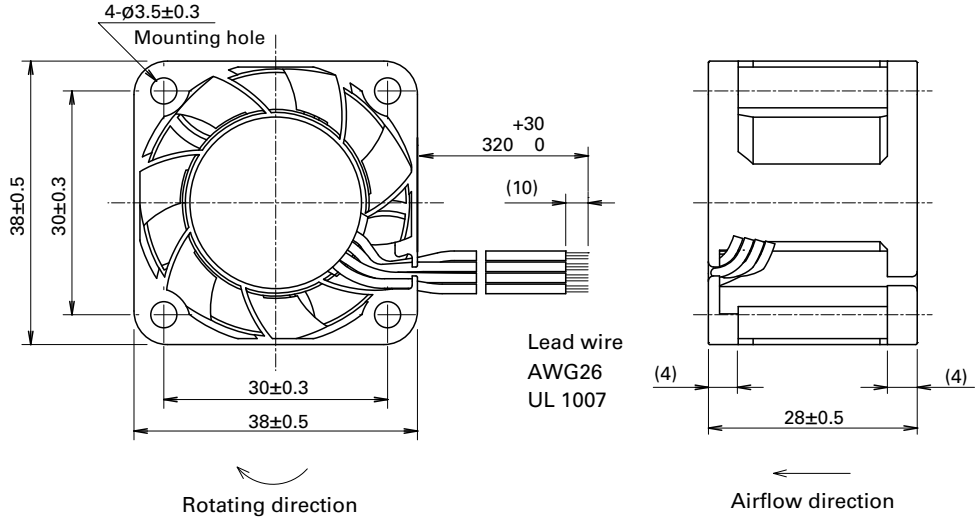

Reference Dimensions of Mounting Holes and Vent Opening (unit: mm)

Inlet side, Outlet side

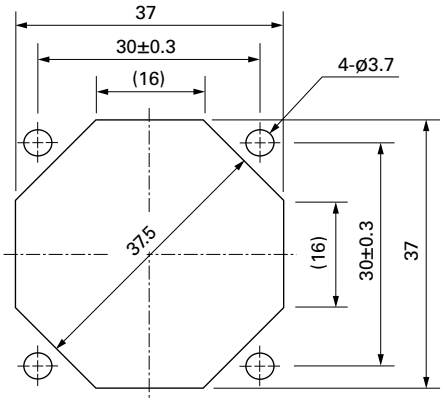

Options

Finger guards page: p. 590

Model no.: 109-1065

40×40×10 mm

San Ace 40 9P type

General Specifications

- Material ..... Frame: Plastic (Flammability: UL 94V-0), Impeller: Plastic (Flammability: UL 94V-1)
- Expected life ..... See the table below. (L10 life: 90% survival rate for continuous operation in free air at 60˚C, rated voltage) Expected life at 40°C is for reference only.
- Motor protection function ..... Locked rotor burnout protection, Reverse polarity protection For details, please refer to p. 608.
- Dielectric strength ..... 50/60 Hz, 500 VAC, for 1 minute (between lead wire conductors and frame)
- Insulation resistance ..... 10 MΩ min. at 500 VDC (between lead wire conductors and frame)
- Sound pressure level (SPL) ..... A-weighted sound pressure level (SPL) at 1 m away from the air inlet.
- Storage temperature ..... -30 to +70˚C (Non-condensing)
- Lead wire ..... ⊕Red ⊖Black or Blue Sensor Yellow
- Mass ..... 19 g

Specifications

The models listed below **have ribs and a pulse sensor.**

Model no.	Rated voltage [V]	Operating voltage range [V]	Rated current [A]	Rated input [W]	Rated speed [min⁻¹]	Max. airflow [m³/min]	Max. airflow [CFM]	Max. static pressure [Pa]	Max. static pressure [inchH₂O]	SPL [dB (A)]	Operating temperature [˚C]	Expected life [h]
109P0405H901	5	4.5 to 5.5	0.16	0.8	6200	0.15	5.3	41.2	0.165	25	-10 to +60	40000/60˚C (70000/40˚C)
109P0405M901			0.11	0.55	5000	0.12	4.2	27	0.108	21		
109P0412H901	12	7 to 13.2	0.07	0.84	6200	0.15	5.3	41.2	0.165	25		
109P0412M901			0.06	0.72	5000	0.12	4.2	27	0.108	21		
109P0424H901	24	20.4 to 27.6	0.04	0.96	6200	0.15	5.3	41.2	0.165	25		

Note 1: Sensor and control options are available for selection. Refer to the table on p. 635.
Note 2: The » mark indicates Short LeadTime Service applicable models. See p. 664 for details.

Airflow - Static Pressure Characteristics

109P0405H901 With pulse sensor

Operating voltage range

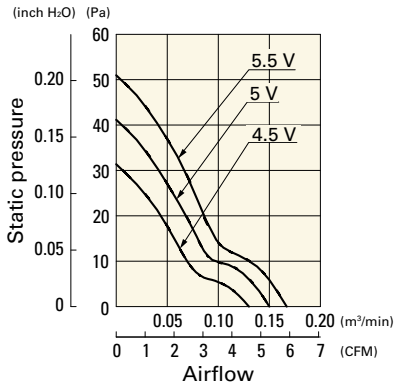

109P0405M901 With pulse sensor

Operating voltage range

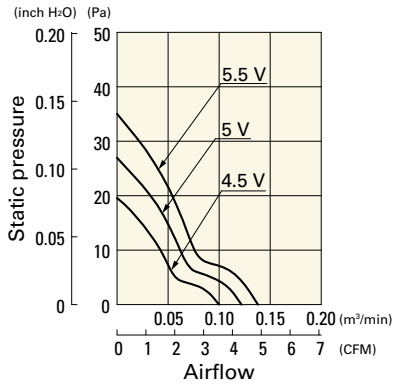

109P0412H901 With pulse sensor

Operating voltage range

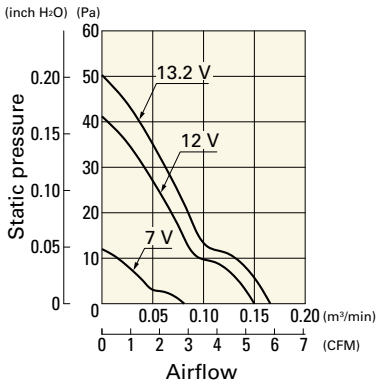

Airflow - Static Pressure Characteristics

109P0412M901 With pulse sensor

Operating voltage range

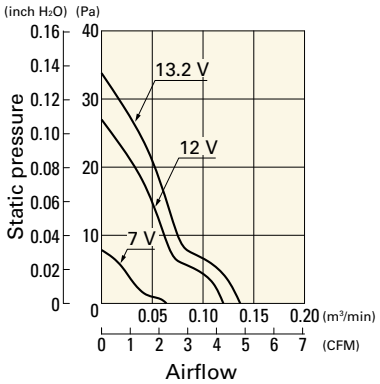

109P0424H901 With pulse sensor

Operating voltage range

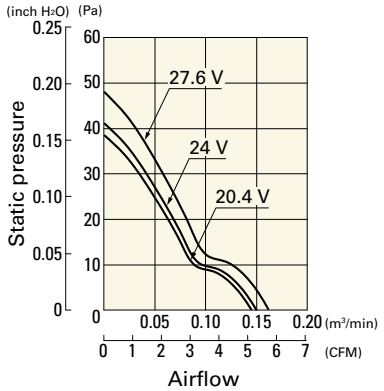

Dimensions (unit: mm)

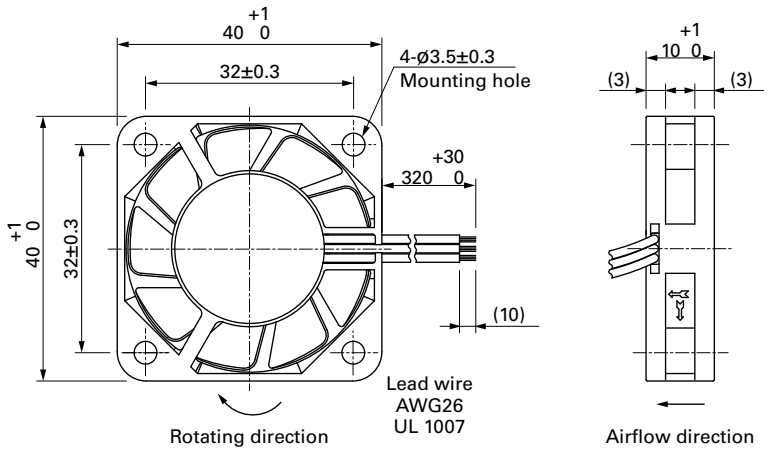

Reference Dimensions of Mounting Holes and Vent Opening (unit: mm)

Inlet side, Outlet side

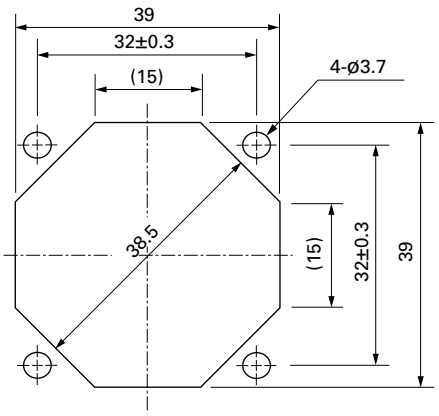

Options

Finger guards page: p. 590

Model no.: 109-059, 109-059H

40×40×15 mm

San Ace 40 9GA type Low Power Consumption Fan

General Specifications

- Material ..... Frame: Plastic (Flammability: UL 94V-0), Impeller: Plastic (Flammability: UL 94V-0)
- Expected life ..... See the table below. (L10 life: 90% survival rate for continuous operation in free air at 60˚C, rated voltage) Expected life at 40°C is for reference only.
- Motor protection function ..... Locked rotor burnout protection, Reverse polarity protection For details, please refer to p. 608.
- Dielectric strength ..... 50/60 Hz, 500 VAC, for 1 minute (between lead wire conductors and frame)
- Insulation resistance ..... 10 MΩ min. at 500 VDC (between lead wire conductors and frame)
- Sound pressure level (SPL) ..... A-weighted sound pressure level (SPL) at 1 m away from the air inlet.
- Storage temperature ..... -30 to +70˚C (Non-condensing)
- Lead wire ..... ⊕Red ⊖Black Sensor Yellow Control Brown (For models without PWM control, there is no speed control wiring.)
- Mass ..... 28 g

Specifications

The models listed below **have ribs and a pulse sensor with PWM control.**

Model no.	Rated voltage [V]	Operating voltage range [V]	PWM duty cycle* [%]	Rated current [A]	Rated input [W]	Rated speed [min⁻¹]	Max. airflow [m³/min]	Max. airflow [CFM]	Max. static pressure [Pa]	Max. static pressure [inchH₂O]	SPL [dB (A)]	Operating temperature [˚C]	Expected life [h]
9GA0405P7C001	5	4.75 to 5.25	100	0.16	0.8	8800	0.24	8.5	86	0.35	33	-20 to +70	60000/60˚C (90000/40˚C)
			30	0.03	0.15	1250	0.03	1.1	1.7	0.007	10		
9GA0412P7G001	12	10.2 to 13.8	100	0.17	2.04	13100	0.36	12.7	192	0.77	42		40000/60˚C (70000/40˚C)

PWM frequency is 25 kHz. Models without ratings for 0% PWM duty cycle have zero speed at 0%. When control terminal is open, speed is the same as at 100% duty cycle.

The models listed below **have ribs and a pulse sensor.**

Model no.	Rated voltage [V]	Operating voltage range [V]	Rated current [A]	Rated input [W]	Rated speed [min⁻¹]	Max. airflow [m³/min]	Max. airflow [CFM]	Max. static pressure [Pa]	Max. static pressure [inchH₂O]	SPL [dB (A)]	Operating temperature [˚C]	Expected life [h]
9GA0412G7001	12	7 to 13.8	0.17	2.04	13100	0.36	12.7	192	0.77	42	-20 to +70	40000/60˚C (70000/40˚C)
9GA0412H7001			0.06	0.72	7300	0.2	7.1	59.6	0.24	28		
9GA0412L7001			0.04	0.48	4400	0.11	3.9	22.7	0.09	20		

Note 1: Sensor and control options are available for selection. Refer to the table on pp. 637 to 638.
Note 2: The » mark indicates Short LeadTime Service applicable models. See p. 664 for details.

Airflow - Static Pressure Characteristics / PWM Duty - Speed Characteristics Example

9GA0405P7C001 With pulse sensor with PWM control

PWM duty cycle

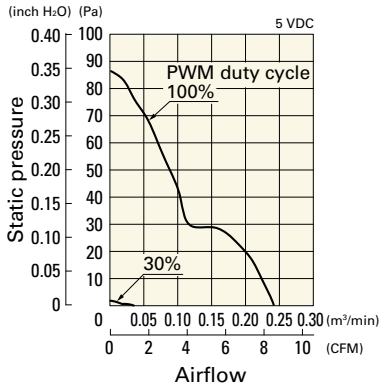

Operating voltage range

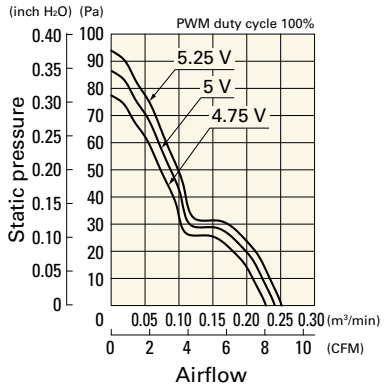

PWM duty - Speed characteristics example

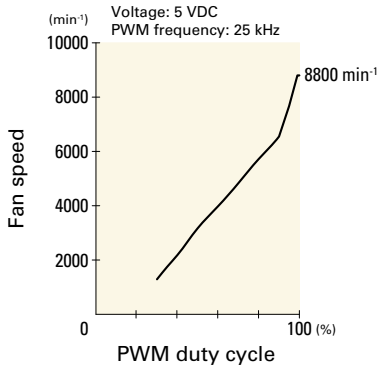

Airflow - Static Pressure Characteristics / PWM Duty - Speed Characteristics Example

9GA0412P7G001 With pulse sensor with PWM control

PWM duty cycle

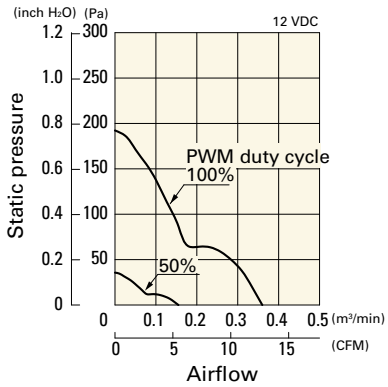

Operating voltage range

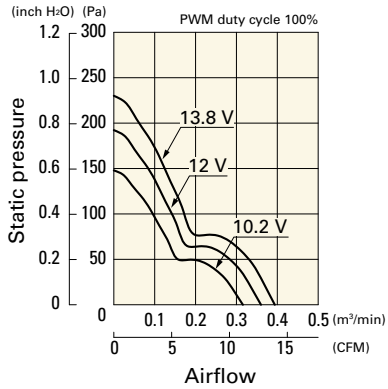

PWM duty - Speed characteristics example

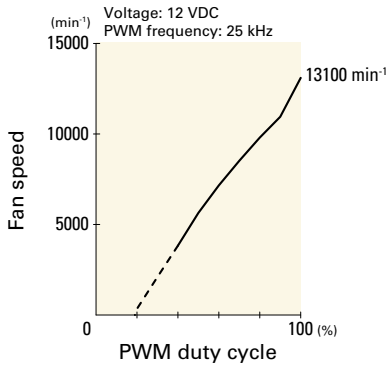

Airflow - Static Pressure Characteristics

9GA0412G7001 With pulse sensor

Operating voltage range

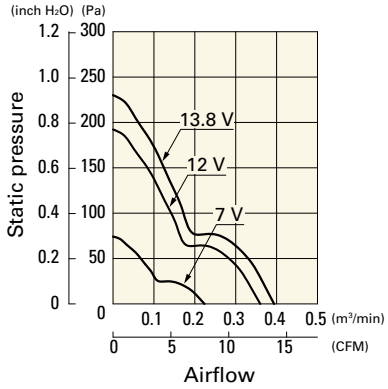

9GA0412H7001 With pulse sensor

Operating voltage range

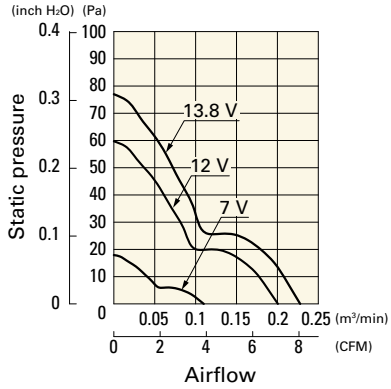

9GA0412L7001 With pulse sensor

Operating voltage range

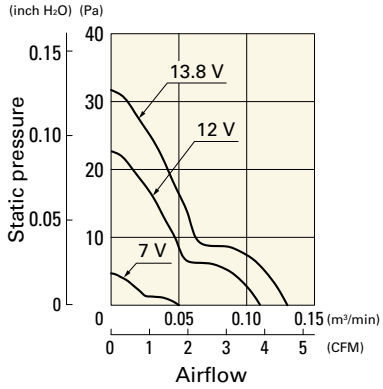

Dimensions (unit: mm) (With pulse sensor with PWM control)

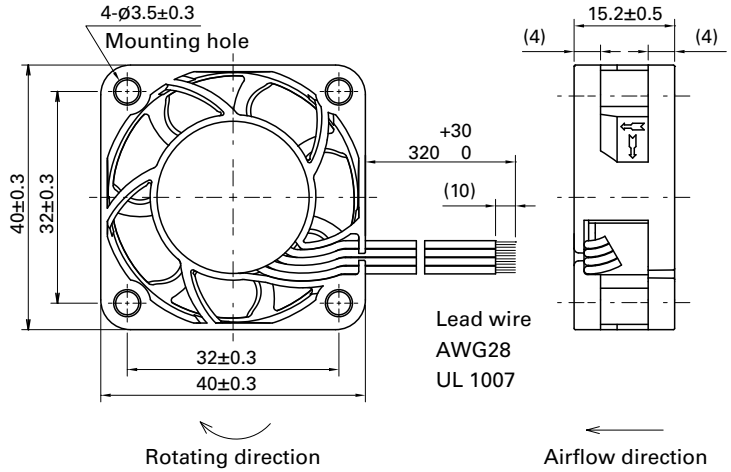

Reference Dimensions of Mounting Holes and Vent Opening (unit: mm)

Inlet side, Outlet side

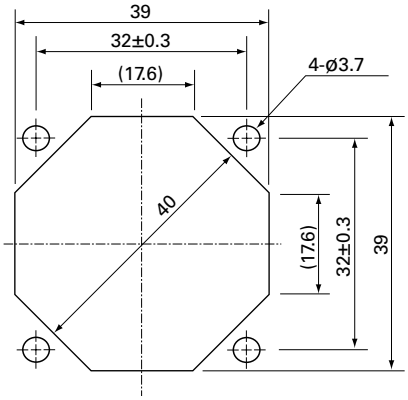

Options

Finger guards page: p. 590

Model no.: 109-059, 109-059H

DC Fan

40×40×15 mm

San Ace 40 9P type

General Specifications

- Material ..... Frame: Plastic (Flammability: UL 94V-0), Impeller: Plastic (Flammability: UL 94V-1)
- Expected life ..... See the table below. (L10 life: 90% survival rate for continuous operation in free air at 60˚C, rated voltage) Expected life at 40°C is for reference only.
- Motor protection function ..... Locked rotor burnout protection, Reverse polarity protection For details, please refer to p. 608.
- Dielectric strength ..... 50/60 Hz, 500 VAC, for 1 minute (between lead wire conductors and frame)
- Insulation resistance ..... 10 MΩ min. at 500 VDC (between lead wire conductors and frame)
- Sound pressure level (SPL) ..... A-weighted sound pressure level (SPL) at 1 m away from the air inlet.
- Storage temperature ..... -30 to +70˚C (Non-condensing)
- Lead wire ..... ⊕Red ⊖Black or Blue Sensor Yellow
- Mass ..... 32 g

Specifications

The models listed below **have ribs and a pulse sensor.**

Model no.	Rated voltage [V]	Operating voltage range [V]	Rated current [A]	Rated input [W]	Rated speed [min⁻¹]	Max. airflow [m³/min]	Max. airflow [CFM]	Max. static pressure [Pa]	Max. static pressure [inchH₂O]	SPL [dB (A)]	Operating temperature [˚C]	Expected life [h]
109P0424H701	24	20.4 to 27.6	0.08	1.92	7700	0.18	6.4	75.5	0.303	28	-20 to +70	60000/60˚C (90000/40˚C)

Note 1: Sensor and control options are available for selection. Refer to the table on p. 635.
Note 2: The » mark indicates Short LeadTime Service applicable models. See p. 664 for details.

Airflow - Static Pressure Characteristics

109P0424H701 With pulse sensor

Operating voltage range

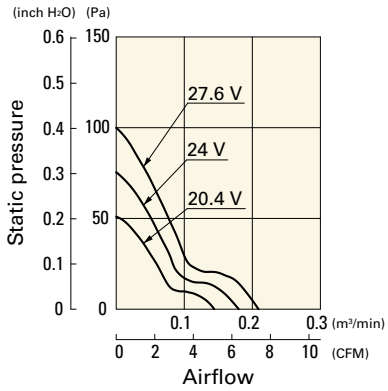

Dimensions (unit: mm)

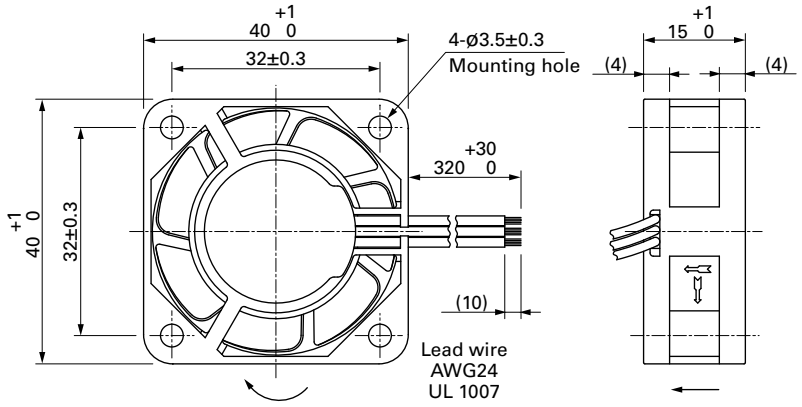

Reference Dimensions of Mounting Holes and Vent Opening (unit: mm)

Inlet side, Outlet side

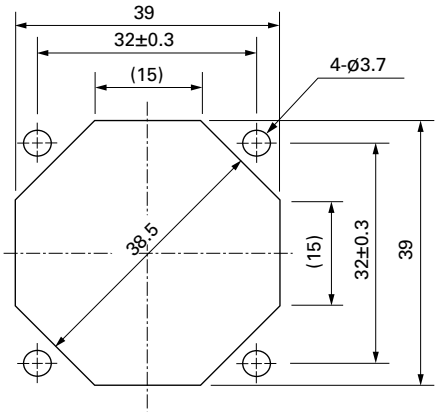

Options

Finger guards page: p. 590

Model no.: 109-059, 109-059H

DC Fan

40×40×20 mm

San Ace 40 9GA type Low Power Consumption Fan

General Specifications

- Material ..... Frame: Plastic (Flammability: UL 94V-0), Impeller: Plastic (Flammability: UL 94V-0)
- Expected life ..... See the table below. (L10 life: 90% survival rate for continuous operation in free air at 60˚C, rated voltage) Expected life at 40°C is for reference only.
- Motor protection function ..... Locked rotor burnout protection, Reverse polarity protection For details, please refer to p. 608.
- Dielectric strength ..... 50/60 Hz, 500 VAC, for 1 minute (between lead wire conductors and frame)
- Insulation resistance ..... 10 MΩ min. at 500 VDC (between lead wire conductors and frame)
- Sound pressure level (SPL) ..... A-weighted sound pressure level (SPL) at 1 m away from the air inlet.
- Storage temperature ..... -30 to +70˚C (Non-condensing)
- Lead wire ..... ⊕Red ⊖Black Sensor Yellow Control Brown
- Mass ..... 35 g

Specifications

The models listed below **have ribs and a pulse sensor with PWM control.**

Model no.	Rated voltage [V]	Operating voltage range [V]	PWM duty cycle* [%]	Rated current [A]	Rated input [W]	Rated speed [min⁻¹]	Max. airflow [m³/min]	Max. airflow [CFM]	Max. static pressure [Pa]	Max. static pressure [inchH₂O]	SPL [dB (A)]	Operating temperature [˚C]	Expected life [h]
9GA0405P6H001	5	4.5 to 5.5	100	0.35	1.75	12400	0.33	11.7	191	0.77	40	-20 to +70	60000/60˚C (90000/40˚C)
9GA0405P6F001			100	0.18	0.9	8000	0.21	7.4	79.5	0.32	28		
9GA0412P6G001	12	10.2 to 13.8	100	0.23	2.76	16000	0.42	14.8	318	1.28	47		40000/60˚C (70000/40˚C)
			0	0.04	0.48	3800	0.1	3.5	17.9	0.07	14		
9GA0412P6H001			100	0.14	1.68	12400	0.33	11.7	191	0.77	40		60000/60˚C (90000/40˚C)
			0	0.04	0.48	3800	0.1	3.5	17.9	0.07	14		
9GA0412P6F001			100	0.08	0.96	8000	0.21	7.4	79.5	0.32	28		
			0	0.03	0.36	2200	0.06	2.1	6.0	0.02	10		
9GA0424P6G001	24	20.4 to 27.6	100	0.13	3.12	16000	0.42	14.8	318	1.28	47		40000/60˚C (70000/40˚C)
9GA0424P6H001			100	0.08	1.92	12400	0.33	11.7	191	0.77	40		60000/60˚C (90000/40˚C)
9GA0424P6F001			100	0.04	0.96	8000	0.21	7.4	79.5	0.32	28		

PWM frequency is 25 kHz. Models without ratings for 0% PWM duty cycle have zero speed at 0%. When control terminal is open, speed is the same as at 100% duty cycle.

Note 1: Sensor and control options are available for selection. Refer to the table on pp. 637 to 638.
Note 2: The » mark indicates Short Lead Time Service applicable models. See p. 664 for details.

Airflow - Static Pressure Characteristics / PWM Duty - Speed Characteristics Example

9GA0405P6H001 With pulse sensor with PWM control

PWM duty cycle

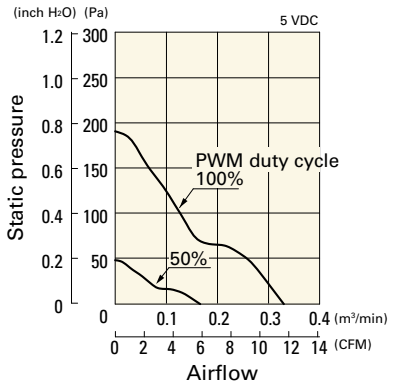

Operating voltage range

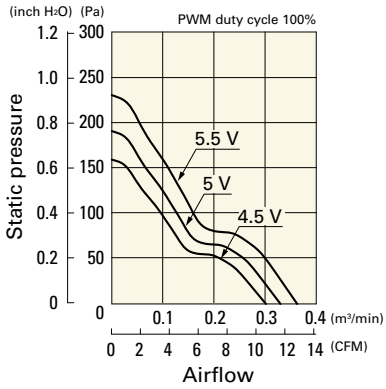

PWM duty - Speed characteristics example

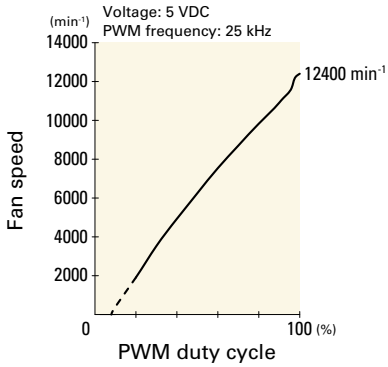

Airflow - Static Pressure Characteristics / PWM Duty - Speed Characteristics Example

9GA0405P6F001 With pulse sensor with PWM control

PWM duty cycle

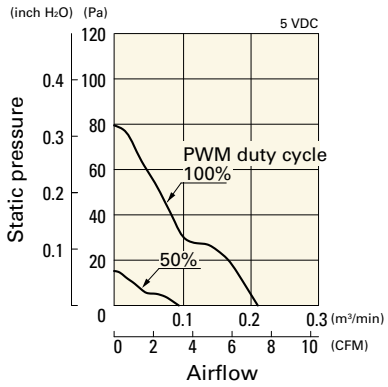

Operating voltage range

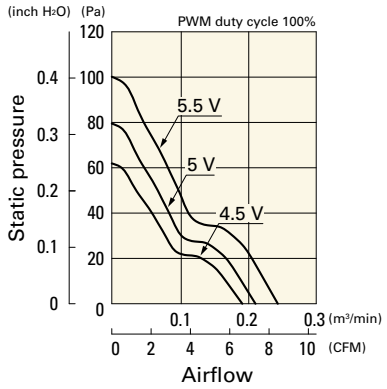

PWM duty - Speed characteristics example

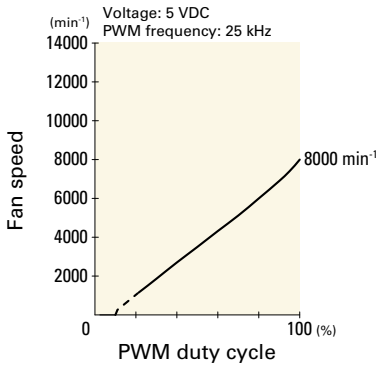

9GA0412P6G001 With pulse sensor with PWM control

PWM duty cycle

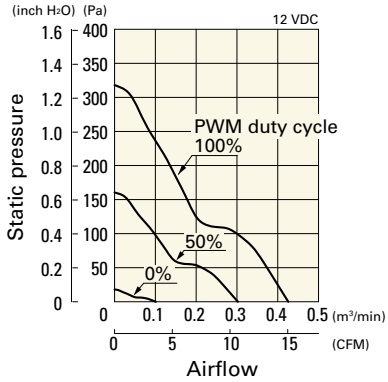

Operating voltage range

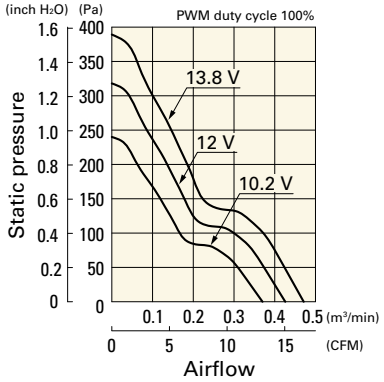

PWM duty - Speed characteristics example

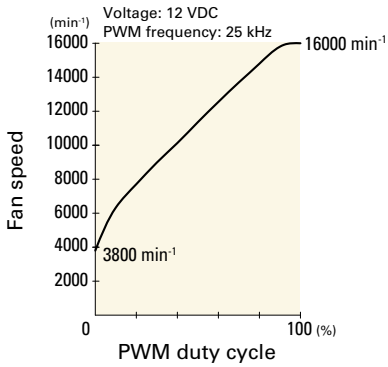

9GA0412P6H001 With pulse sensor with PWM control

PWM duty cycle

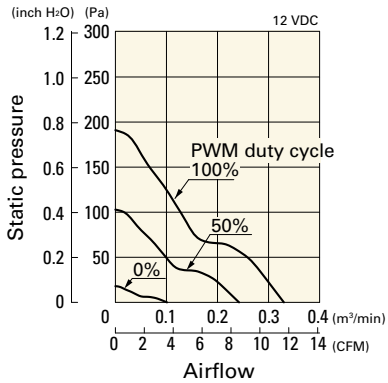

Operating voltage range

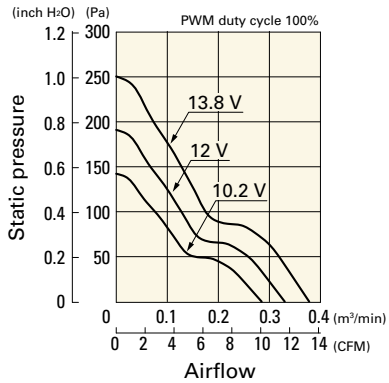

PWM duty - Speed characteristics example

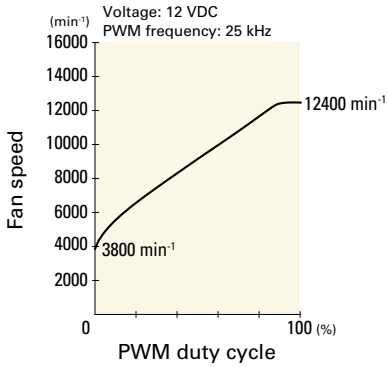

9GA0412P6F001 With pulse sensor with PWM control

PWM duty cycle

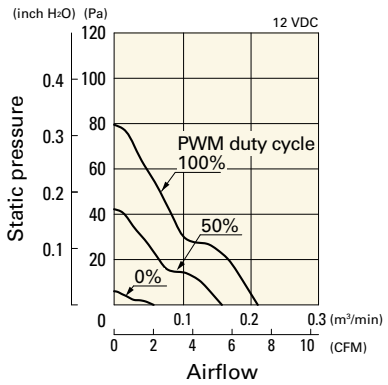

Operating voltage range

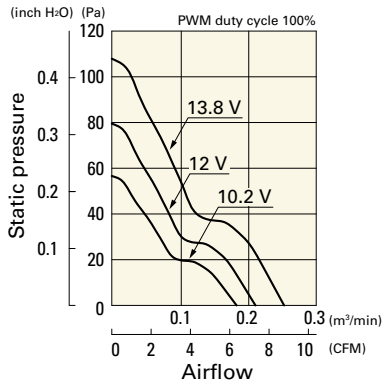

PWM duty - Speed characteristics example

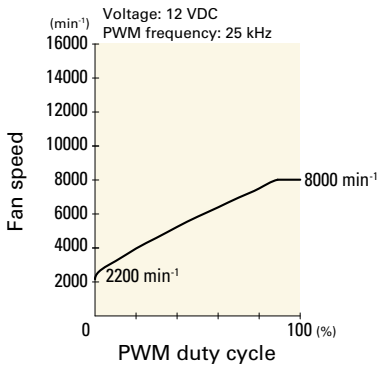

Airflow - Static Pressure Characteristics / PWM Duty - Speed Characteristics Example

9GA0424P6G001 With pulse sensor with PWM control

PWM duty cycle

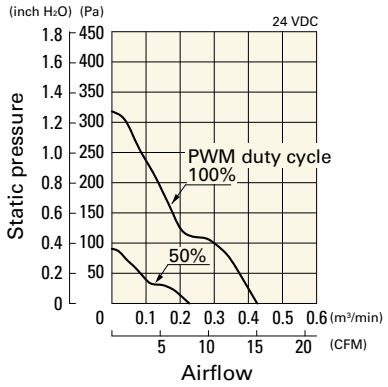

Operating voltage range

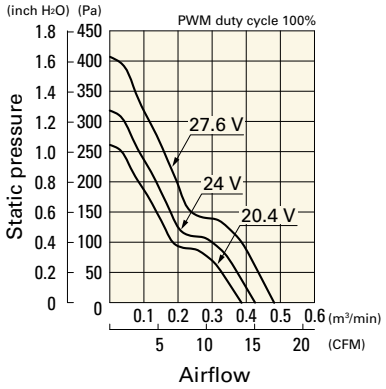

PWM duty - Speed characteristics example

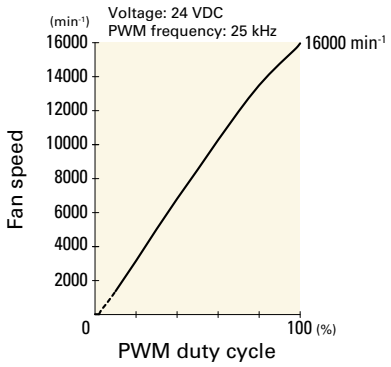

9GA0424P6H001 With pulse sensor with PWM control

PWM duty cycle

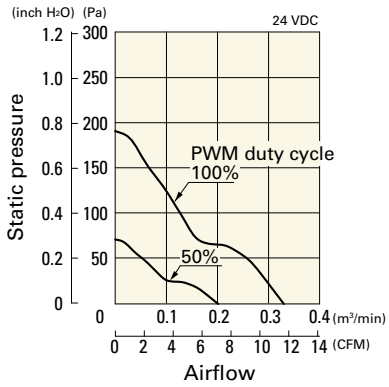

Operating voltage range

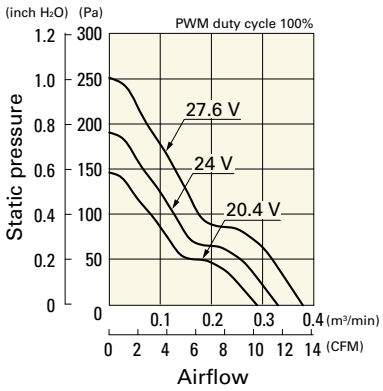

PWM duty - Speed characteristics example

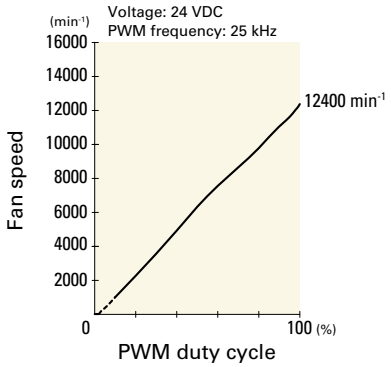

9GA0424P6F001 With pulse sensor with PWM control

PWM duty cycle

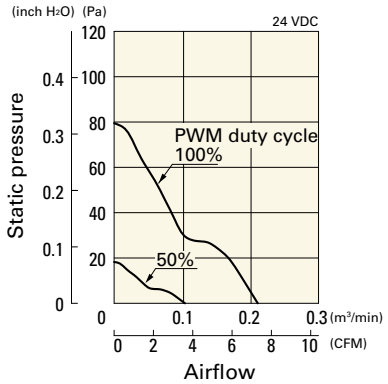

Operating voltage range

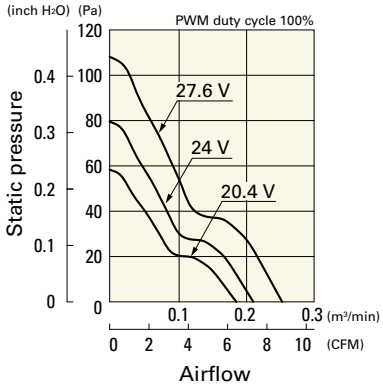

PWM duty - Speed characteristics example

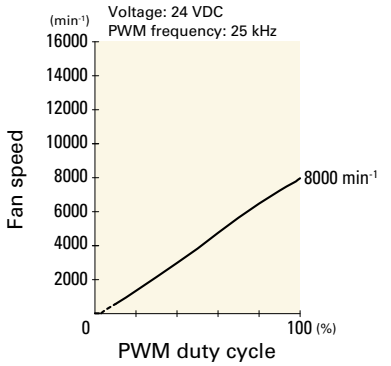

Dimensions (unit: mm)

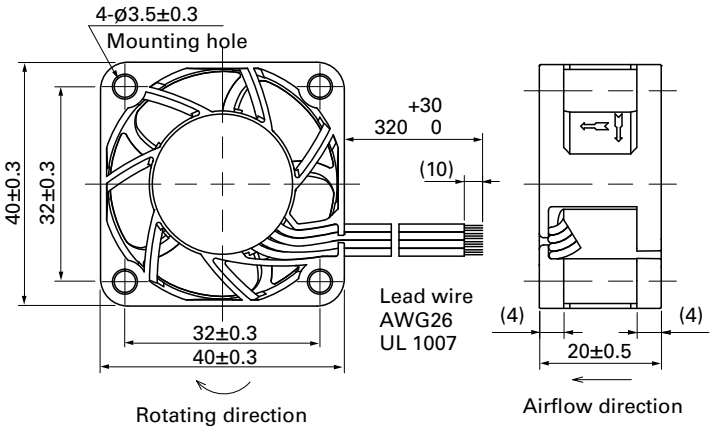

Reference Dimensions of Mounting Holes and Vent Opening (unit: mm)

Inlet side, Outlet side

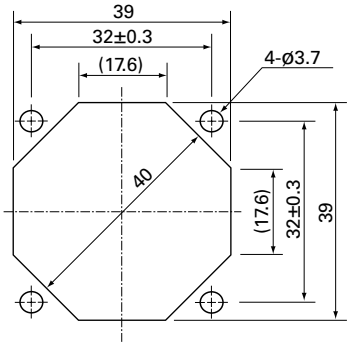

Options

Finger guards page: p. 590

Model no.: 109-059, 109-059H

DC Fan

40×40×20 mm

San Ace 40 9P type

General Specifications

- Material ..... Frame: Plastic (Flammability: UL 94V-0), Impeller: Plastic (Flammability: UL 94V-1)
- Expected life ..... See the table below. (L10 life: 90% survival rate for continuous operation in free air at 60˚C, rated voltage) Expected life at 40°C is for reference only.
- Motor protection function ..... Locked rotor burnout protection, Reverse polarity protection For details, please refer to p. 608.
- Dielectric strength ..... 50/60 Hz, 500 VAC, for 1 minute (between lead wire conductors and frame)
- Insulation resistance ..... 10 MΩ min. at 500 VDC (between lead wire conductors and frame)
- Sound pressure level (SPL) ..... A-weighted sound pressure level (SPL) at 1 m away from the air inlet.
- Storage temperature ..... -30 to +70˚C (Non-condensing)
- Lead wire ..... ⊕Red ⊖Black or Blue Sensor Yellow
- Mass ..... 45 g

Specifications

The models listed below **have ribs and a pulse sensor.**

Model no.	Rated voltage [V]	Operating voltage range [V]	Rated current [A]	Rated input [W]	Rated speed [min⁻¹]	Max. airflow [m³/min]	Max. airflow [CFM]	Max. static pressure [Pa]	Max. static pressure [inchH₂O]	SPL [dB (A)]	Operating temperature [˚C]	Expected life [h]
109P0405F601	5	4.5 to 5.5	0.25	1.25	6500	0.183	6.5	45.1	0.181	28	-20 to +70	60000/60˚C (90000/40˚C)
109P0405M601			0.12	0.6	5000	0.136	4.8	26.5	0.106	24		
109P0412F601	12	7 to 13.8	0.09	1.08	6500	0.183	6.5	45.1	0.181	28		
109P0412M601		8 to 13.8	0.06	0.72	5000	0.136	4.8	26.5	0.106	24		
109P0424F601	24	14 to 27.6	0.06	1.44	6500	0.183	6.5	45.1	0.181	28		
109P0424B601		20.4 to 27.6	0.06	1.44	5200	0.14	4.9	28.3	0.114	25		

Note 1: Sensor and control options are available for selection. Refer to the table on p. 635.
Note 2: The » mark indicates Short LeadTime Service applicable models. See p. 664 for details.

Airflow - Static Pressure Characteristics

109P0405F601 With pulse sensor

Operating voltage range

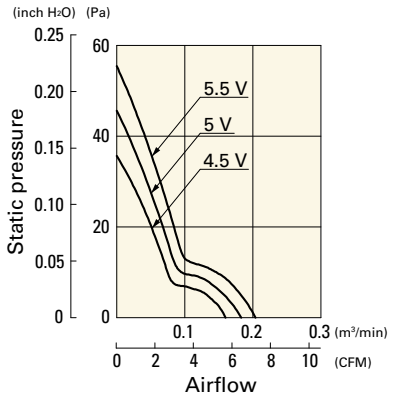

109P0405M601 With pulse sensor

Operating voltage range

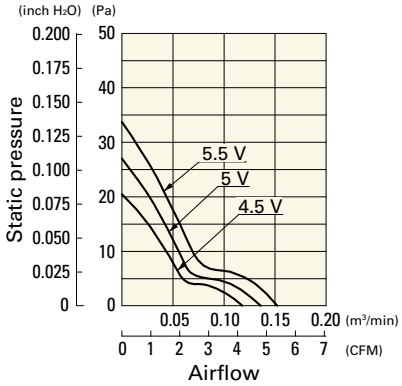

109P0412F601 With pulse sensor

Operating voltage range

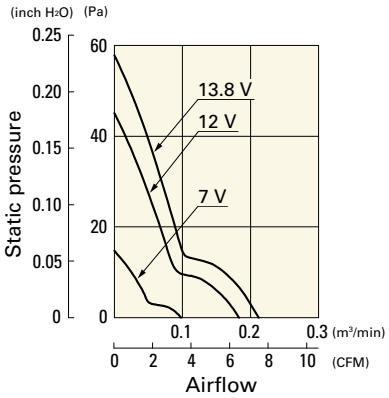

Airflow - Static Pressure Characteristics

109P0412M601 With pulse sensor

Operating voltage range

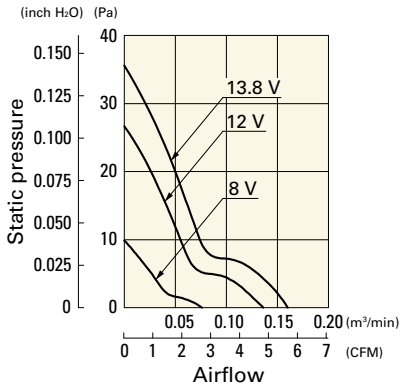

109P0424F601 With pulse sensor

Operating voltage range

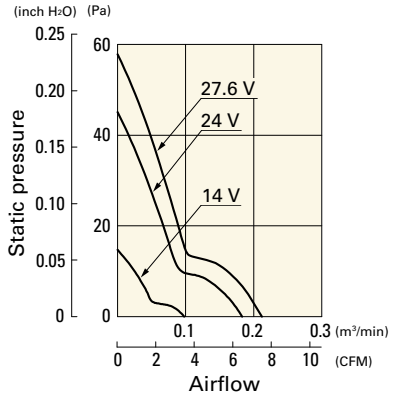

109P0424B601 With pulse sensor

Operating voltage range

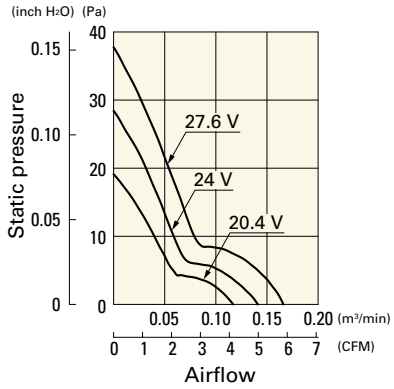

Dimensions (unit: mm)

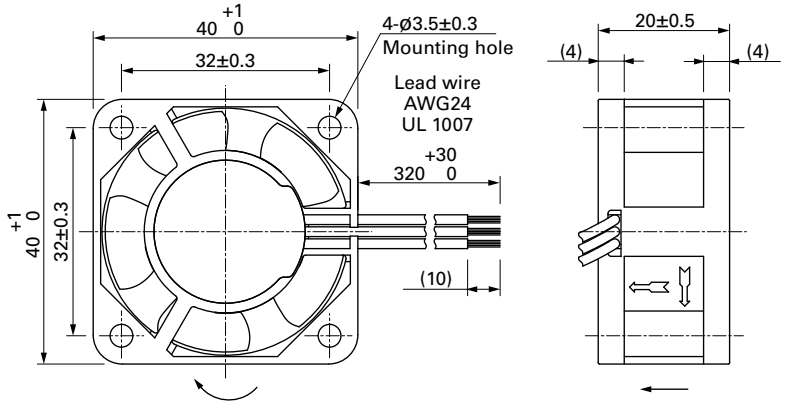

Rotating direction

Airflow direction

Reference Dimensions of Mounting Holes and Vent Opening (unit: mm)

Inlet side, Outlet side

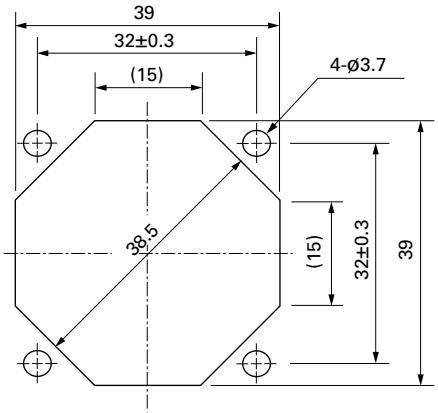

Options

Finger guards page: p. 590

Model no.: 109-059, 109-059H

DC Fan

40×40×28 mm

San Ace 40 9HVA type

General Specifications

- Material ..... Frame: Plastic (Flammability: UL 94V-0), Impeller: Plastic (Flammability: UL 94V-0)
- Expected life ..... See the table below. (L10 life: 90% survival rate for continuous operation in free air at 60˚C, rated voltage) Expected life at 40°C is for reference only.
- Motor protection function ..... Locked rotor burnout protection, Reverse polarity protection For details, please refer to p. 608.
- Dielectric strength ..... 50/60 Hz, 500 VAC, for 1 minute (between lead wire conductors and frame)
- Insulation resistance ..... 10 MΩ min. at 500 VDC (between lead wire conductors and frame)
- Sound pressure level (SPL) ..... A-weighted sound pressure level (SPL) at 1 m away from the air inlet.
- Storage temperature ..... -30 to +70˚C (Non-condensing)
- Lead wire ..... ⊕Red ⊖Black Sensor Yellow Control Brown
- Mass ..... 57 g

Specifications

The models listed below **have ribs and a pulse sensor with PWM control.**

Model no.	Rated voltage [V]	Operating voltage range [V]	PWM duty cycle* [%]	Rated current [A]	Rated input [W]	Rated speed [min⁻¹]	Max. airflow [m³/min]	Max. airflow [CFM]	Max. static pressure [Pa]	Max. static pressure [inchH₂O]	SPL [dB (A)]	Operating temperature [˚C]	Expected life [h]
9HVA0412P3J001	12	10.2 to 13.8	100	2.6	31.2	38000	1.05	37.1	2300	9.24	71	-20 to +70	30000/60˚C (53000/40˚C)
			20	0.12	1.4	8000	0.22	7.8	101	0.41	34		
9HVA0424P3G001	24	21.6 to 26.4	100	0.88	21.1	33000	0.92	32.5	1650	6.63	68		
			20	0.05	1.2	6750	0.18	6.4	74	0.30	31		

PWM frequency is 25 kHz. Models without ratings for 0% PWM duty cycle have zero speed at 0%. When control terminal is open, speed is the same as at 100% duty cycle.

Note 1: Sensor and control options are available for selection. Refer to the table on pp. 642 to 643.
Note 2: The » mark indicates Short LeadTime Service applicable models. See p. 664 for details.

Airflow - Static Pressure Characteristics / PWM Duty - Speed Characteristics Example

9HVA0412P3J001 With pulse sensor with PWM control

PWM duty cycle

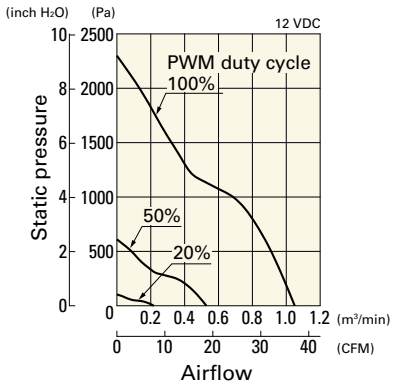

Operating voltage range

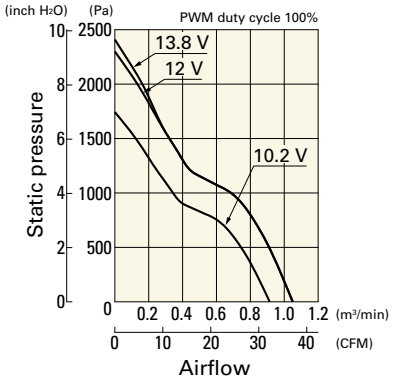

PWM duty - Speed characteristics example

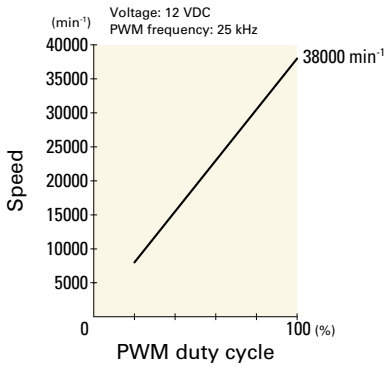

Airflow - Static Pressure Characteristics / PWM Duty - Speed Characteristics Example

9HVA0424P3G001 With pulse sensor with PWM control

PWM duty cycle

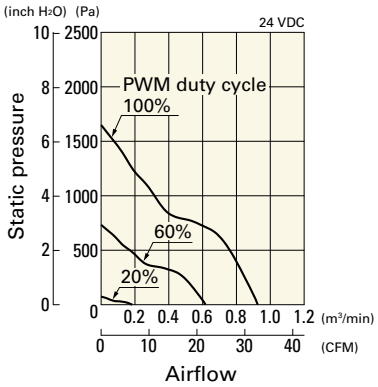

Operating voltage range

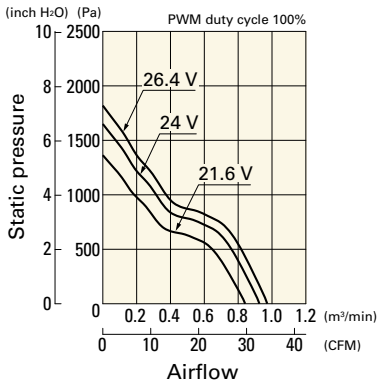

PWM duty - Speed characteristics example

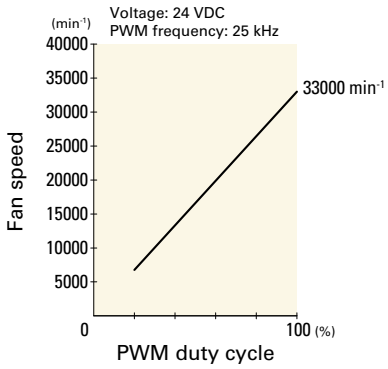

Dimensions (unit: mm)

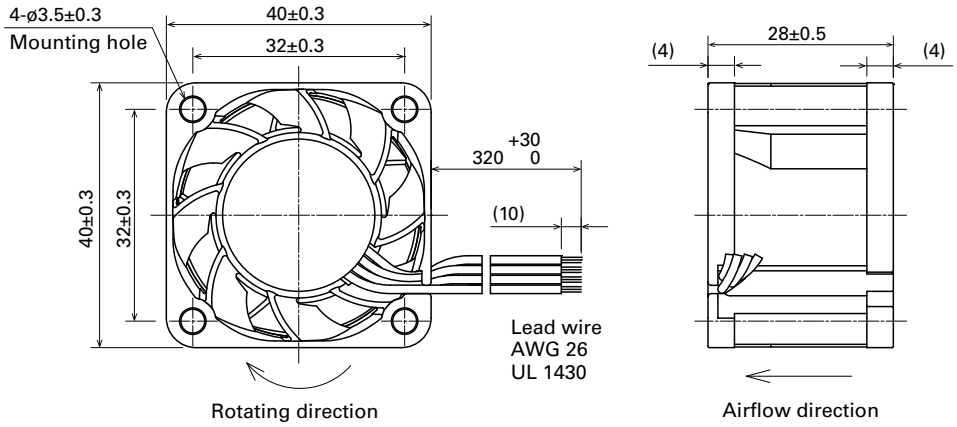

Reference Dimensions of Mounting Holes and Vent Opening (unit: mm)

Inlet side, Outlet side

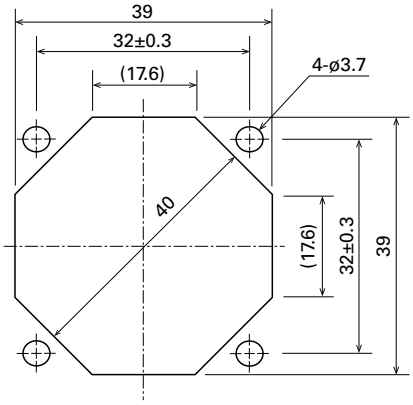

Options

Finger guards page: p. 590

Model no.: 109-059, 109-059H

DC Fan

40×40×28 mm

San Ace 40 9GAX type Low Power Consumption Fan

General Specifications

- Material ..... Frame: Plastic (Flammability: UL 94V-0), Impeller: Plastic (Flammability: UL 94V-0)
- Expected life ..... See the table below. (L10 life: 90% survival rate for continuous operation in free air at 60˚C, rated voltage) Expected life at 40°C is for reference only.
- Motor protection function ..... Locked rotor burnout protection, Reverse polarity protection For details, please refer to p. 608.
- Dielectric strength ..... 50/60 Hz, 500 VAC, for 1 minute (between lead wire conductors and frame)
- Insulation resistance ..... 10 MΩ min. at 500 VDC (between lead wire conductors and frame)
- Sound pressure level (SPL) ..... A-weighted sound pressure level (SPL) at 1 m away from the air inlet.
- Storage temperature ..... -30 to +70˚C (Non-condensing)
- Lead wire ..... ⊕Red ⊖Black Sensor Yellow Control Brown
- Mass ..... 53 g

Specifications

The models listed below **have ribs and a pulse sensor with PWM control.** For models without ribs, append "1" to the end of model numbers.

Model no.	Rated voltage [V]	Operating voltage range [V]	PWM duty cycle* [%]	Rated current [A]	Rated input [W]	Rated speed [min⁻¹]	Max. airflow [m³/min]	Max. airflow [CFM]	Max. static pressure [Pa]	Max. static pressure [inchH₂O]	SPL [dB (A)]	Operating temperature [˚C]	Expected life [h]
9GAX0412P3S001	12	10.8 to 12.6	100	1.3	15.6	25000	0.9	31.8	1000	4.02	64	-20 to +60	30000/60˚C (53000/40˚C)
			20	0.07	0.84	4400	0.155	5.5	32	0.125	21.5		
9GAX0412P3S003			100	1.3	15.6	25000	0.9	31.8	1000	4.02	64		
			0	0.11	1.32	7800	0.26	9.2	87	0.35	38		
9GAX0412P3K001		10.8 to 13.2	100	0.92	11.04	22000	0.81	28.6	800	3.21	61		
			20	0.07	0.84	4200	0.15	5.3	28	0.11	21		
9GAX0412P3K003			100	0.92	11.04	22000	0.81	28.6	800	3.21	61		
			0	0.1	1.2	6500	0.24	8.5	70	0.28	32		

PWM frequency is 25 kHz. Models without ratings for 0% PWM duty cycle have zero speed at 0%. When control terminal is open, speed is the same as at 100% duty cycle.

Note: The » mark indicates Short Lead Time Service applicable models. See p. 664 for details.

Airflow - Static Pressure Characteristics / PWM Duty - Speed Characteristics Example

9GAX0412P3S001 With pulse sensor with PWM control

PWM duty cycle

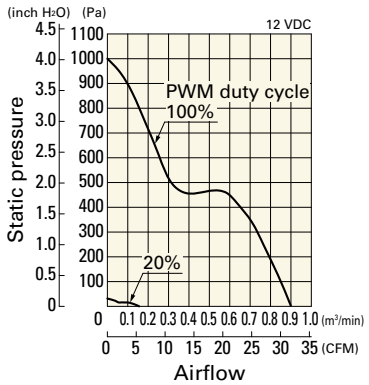

Operating voltage range

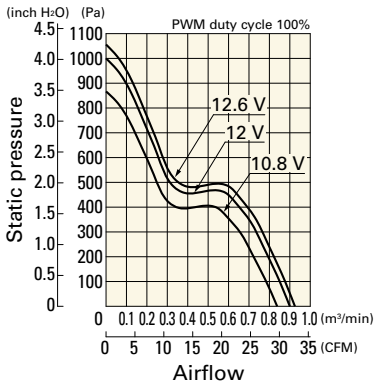

PWM duty - Speed characteristics example

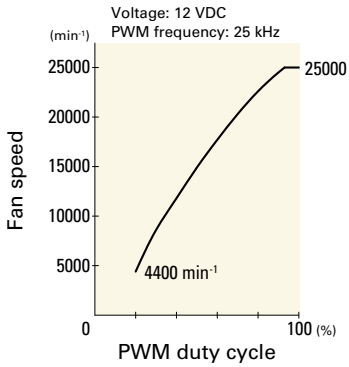

Airflow - Static Pressure Characteristics / PWM Duty - Speed Characteristics Example

9GAX0412P3S003 With pulse sensor with PWM control

PWM duty cycle

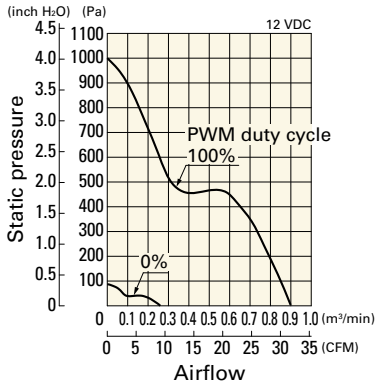

Operating voltage range

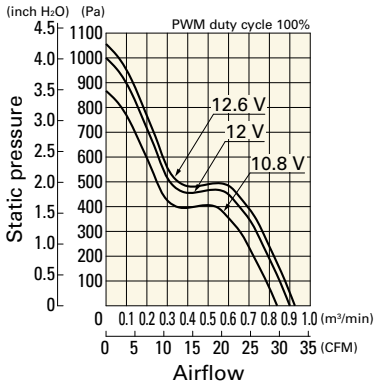

PWM duty - Speed characteristics example

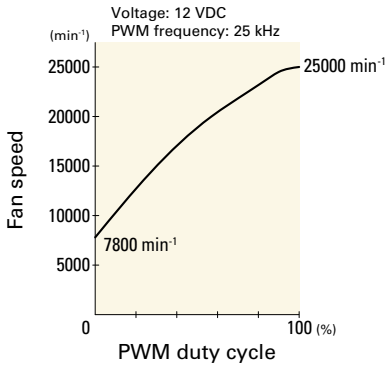

9GAX0412P3K001 With pulse sensor with PWM control

PWM duty cycle

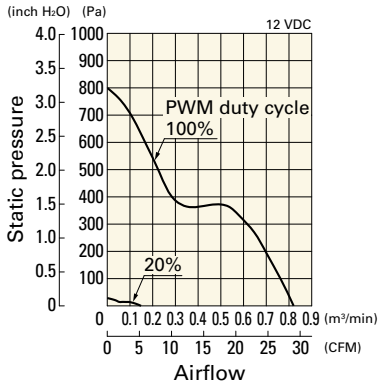

Operating voltage range

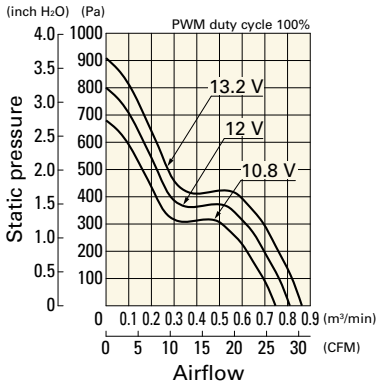

PWM duty - Speed characteristics example

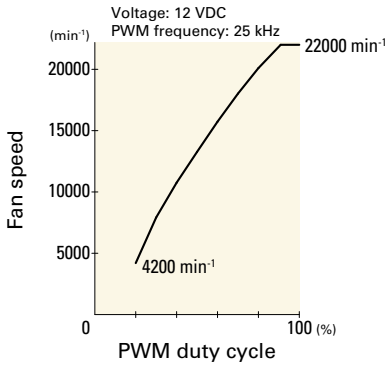

9GAX0412P3K003 With pulse sensor with PWM control

PWM duty cycle

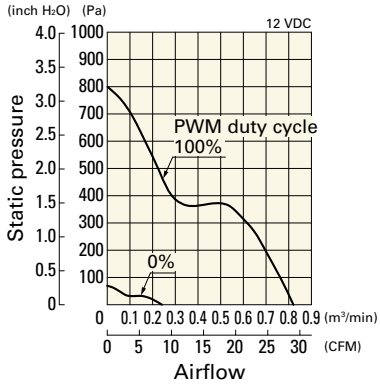

Operating voltage range

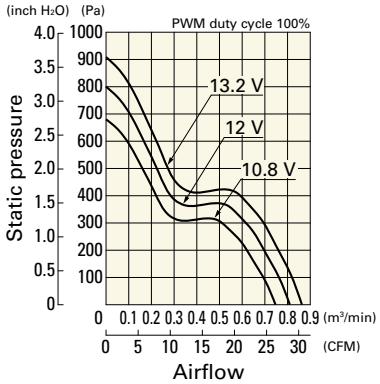

PWM duty - Speed characteristics example

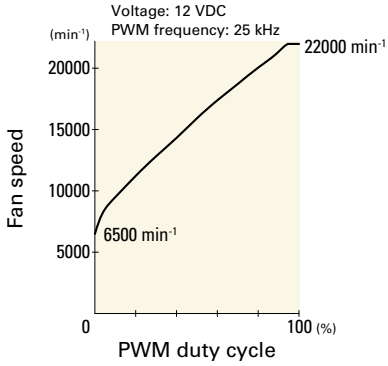

Dimensions (unit: mm) (With ribs)

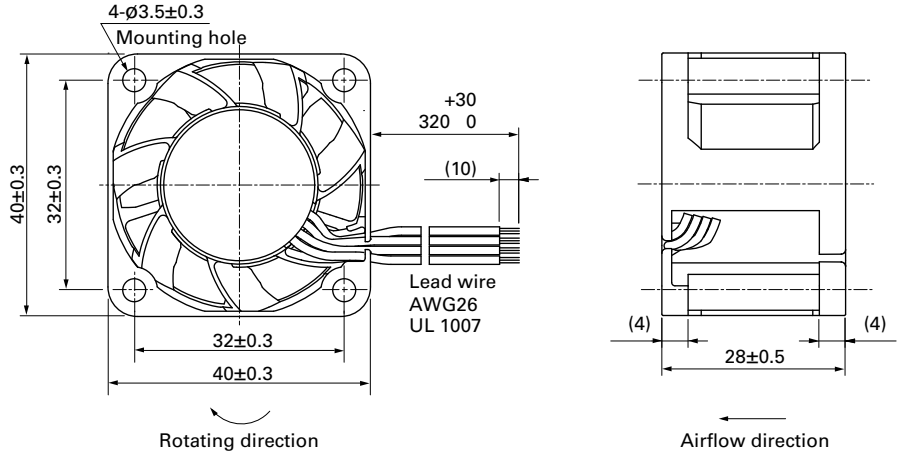

Reference Dimensions of Mounting Holes and Vent Opening (unit: mm)

Inlet side, Outlet side

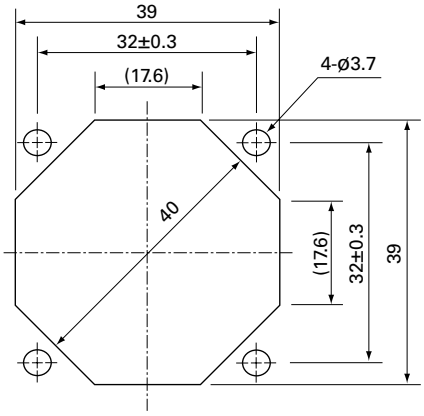

Options

Finger guards page: p. 590

Model no.: 109-059, 109-059H

40×40×28 mm

San Ace 40 9HV type

General Specifications

- Material ..... Frame: Aluminum, Impeller: Plastic (Flammability: UL 94V-0)
- Expected life ..... See the table below. (L10 life: 90% survival rate for continuous operation in free air at 60˚C, rated voltage) Expected life at 40°C is for reference only.
- Motor protection function ..... Locked rotor burnout protection, Reverse polarity protection For details, please refer to p. 608.
- Dielectric strength ..... 50/60 Hz, 500 VAC, for 1 minute (between lead wire conductors and frame)
- Insulation resistance ..... 10 MΩ min. at 500 VDC (between lead wire conductors and frame)
- Sound pressure level (SPL) ..... A-weighted sound pressure level (SPL) at 1 m away from the air inlet.
- Storage temperature ..... -30 to +70˚C (Non-condensing)
- Lead wire ..... ⊕Red ⊖Black Sensor Yellow Control Brown
- Mass ..... 60 g

Specifications

The models listed below **have a pulse sensor with PWM control.**

Model no.	Rated voltage [V]	Operating voltage range [V]	PWM duty cycle* [%]	Rated current [A]	Rated input [W]	Rated speed [min⁻¹]	Max. airflow [m³/min]	Max. airflow [CFM]	Max. static pressure [Pa]	Max. static pressure [inchH₂O]	SPL [dB (A)]	Operating temperature [˚C]	Expected life [h]
9HV0412P3K001	12	10.8 to 12.6	100	1.52	18.3	25000	0.83	29.3	1100	4.42	65	-20 to +60	40000/60˚C (70000/40˚C)
			0	0.2	2.4	7500	0.25	8.8	99	0.4	37		

PWM frequency is 25 kHz. Models without ratings for 0% PWM duty cycle have zero speed at 0%. When control terminal is open, speed is the same as at 100% duty cycle.

Note: The » mark indicates Short Lead Time Service applicable models. See p. 664 for details.

Airflow - Static Pressure Characteristics / PWM Duty - Speed Characteristics Example

9HV0412P3K001 With pulse sensor with PWM control

PWM duty cycle

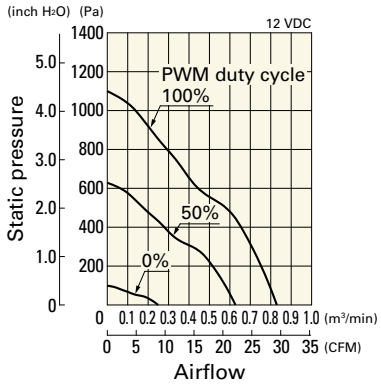

Operating voltage range

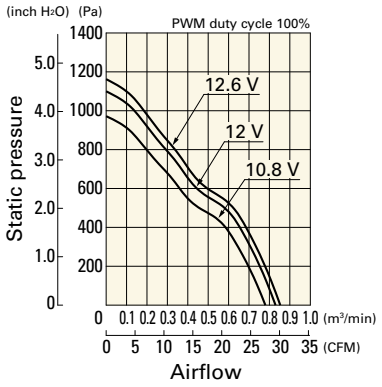

PWM duty - Speed characteristics example

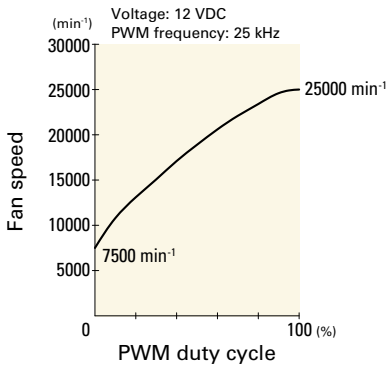

Dimensions (unit: mm)

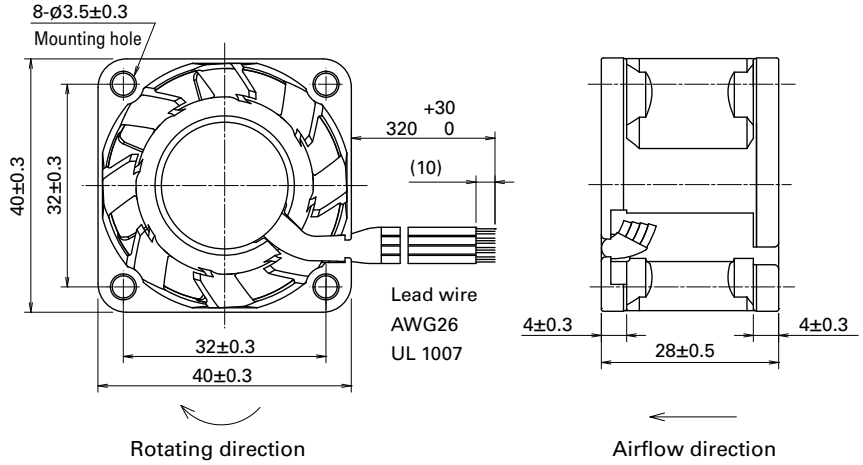

Reference Dimensions of Mounting Holes and Vent Opening (unit: mm)

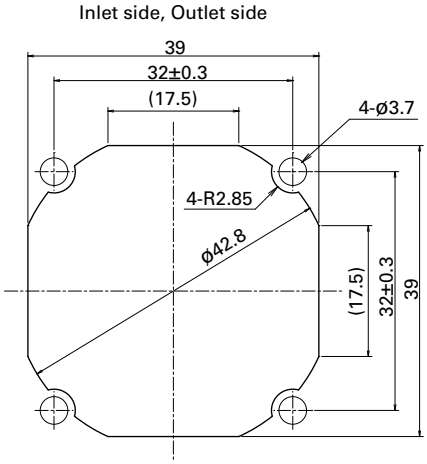

Options

Finger guards page: p. 590

Model no.: 109-059, 109-059H

40×40×28 mm

San Ace 40 9GA type Low Power Consumption Fan

General Specifications

- Material ..... Frame: Plastic (Flammability: UL 94V-0), Impeller: Plastic (Flammability: UL 94V-0)
- Expected life ..... See the table below. (L10 life: 90% survival rate for continuous operation in free air at 60˚C, rated voltage) Expected life at 40°C is for reference only.
- Motor protection function ..... Locked rotor burnout protection, Reverse polarity protection For details, please refer to p. 608.
- Dielectric strength ..... 50/60 Hz, 500 VAC, for 1 minute (between lead wire conductors and frame)
- Insulation resistance ..... 10 MΩ min. at 500 VDC (between lead wire conductors and frame)
- Sound pressure level (SPL) ..... A-weighted sound pressure level (SPL) at 1 m away from the air inlet.
- Storage temperature ..... -30 to +70˚C (Non-condensing)
- Lead wire ..... ⊕Red ⊖Black Sensor Yellow Control Brown (For models without PWM control, there is no speed control wiring.)
- Mass ..... 53 g

Specifications

The models listed below **have ribs and a pulse sensor with PWM control.** For models without ribs, append "1" to the end of model numbers.

Model no.	Rated voltage [V]	Operating voltage range [V]	PWM duty cycle* [%]	Rated current [A]	Rated input [W]	Rated speed [min⁻¹]	Max. airflow [m³/min]	Max. airflow [CFM]	Max. static pressure [Pa]	Max. static pressure [inchH₂O]	SPL [dB (A)]	Operating temperature [˚C]	Expected life [h]
9GA0412P3J01	12	10.8 to 13.2	100	0.49	5.88	18000	0.67	23.7	535	2.15	54	-20 to +70	40000/60˚C (70000/40˚C)
			0	0.05	0.6	4500	0.16	5.7	33	0.13	22		
9GA0412P3G01			100	0.39	4.68	16500	0.61	21.5	450	1.81	53		
			0	0.05	0.6	4500	0.16	5.7	33	0.13	22		
9GA0412P3H01			100	0.28	3.36	14500	0.54	19.1	347	1.39	50		
			0	0.04	0.48	3500	0.13	4.6	20	0.08	17		
9GA0412P3M01			100	0.21	2.52	12500	0.46	16.2	258	1.04	47		
			0	0.04	0.48	3500	0.13	4.6	20	0.08	17		
9GA0424P3J001	24	21.6 to 26.4	100	0.27	6.48	18000	0.67	23.7	535	2.15	54		
9GA0424P3G001			100	0.22	5.28	16500	0.61	21.5	450	1.81	53		
9GA0424P3H001			100	0.16	3.84	14500	0.54	19.1	347	1.39	50		
9GA0424P3M001			100	0.11	2.64	12500	0.46	16.2	258	1.04	47		

PWM frequency is 25 kHz. Models without ratings for 0% PWM duty cycle have zero speed at 0%. When control terminal is open, speed is the same as at 100% duty cycle.

The models listed below **have ribs and a pulse sensor.** For models without ribs, append "1" to the end of model numbers.

Model no.	Rated voltage [V]	Operating voltage range [V]	Rated current [A]	Rated input [W]	Rated speed [min⁻¹]	Max. airflow [m³/min]	Max. airflow [CFM]	Max. static pressure [Pa]	Max. static pressure [inchH₂O]	SPL [dB (A)]	Operating temperature [˚C]	Expected life [h]
9GA0412A301	12	10.8 to 13.2	0.13	1.56	10500	0.38	13.4	182	0.73	43	-10 to +70	40000/60˚C (70000/40˚C)

Note 1: Sensor and control options are available for selection. Refer to the table on pp. 637 to 638.
Note 2: The » mark indicates Short LeadTime Service applicable models. See p. 664 for details.

Airflow - Static Pressure Characteristics / PWM Duty - Speed Characteristics Example

9GA0412P3J01 With pulse sensor with PWM control

PWM duty cycle

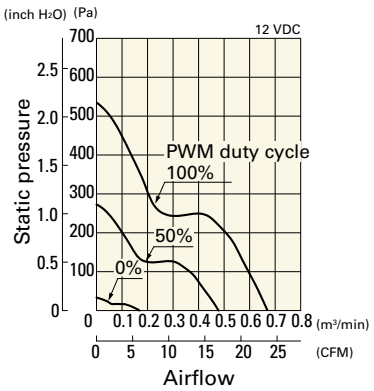

Operating voltage range

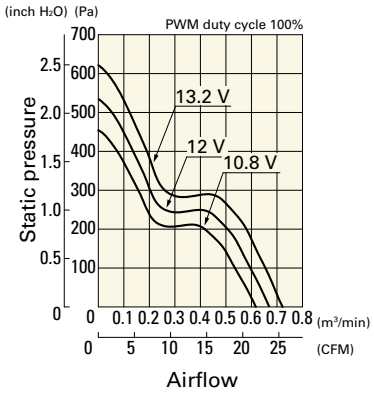

PWM duty - Speed characteristics example

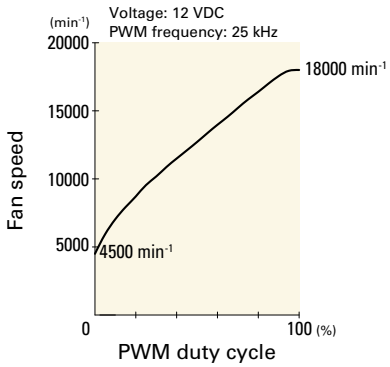

Airflow - Static Pressure Characteristics / PWM Duty - Speed Characteristics Example

9GA0412P3G01 With pulse sensor with PWM control

PWM duty cycle

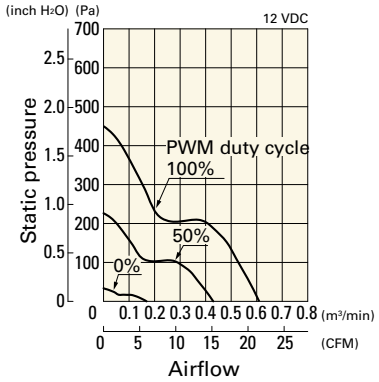

Operating voltage range

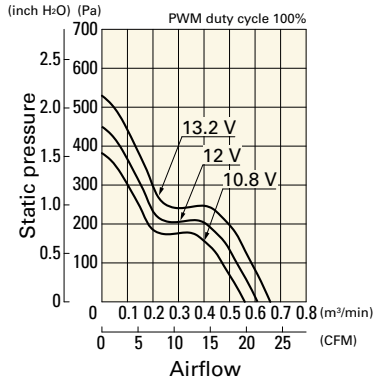

PWM duty - Speed characteristics example

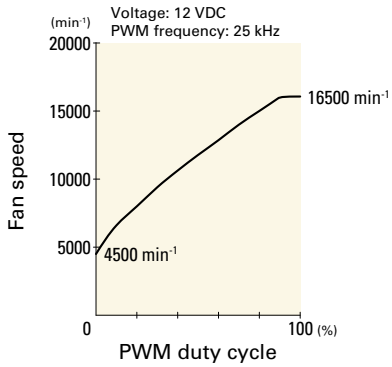

9GA0412P3H01 With pulse sensor with PWM control

PWM duty cycle

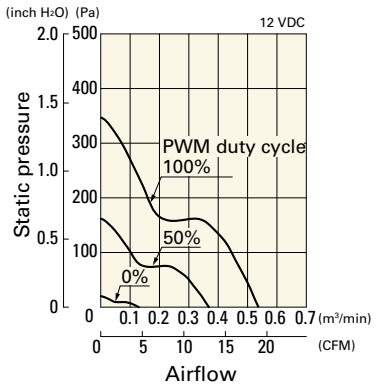

Operating voltage range

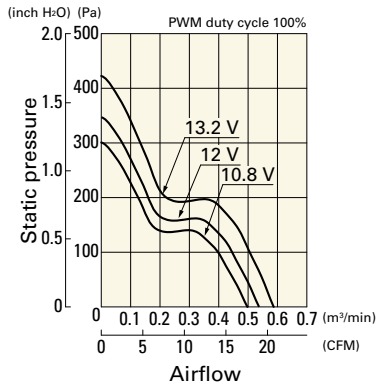

PWM duty - Speed characteristics example

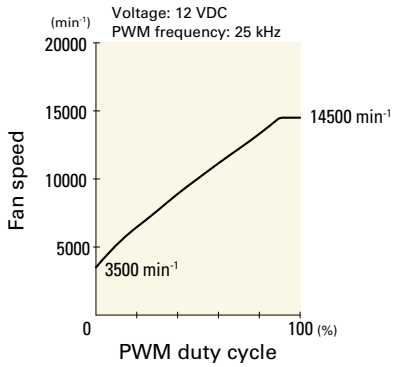

9GA0412P3M01 With pulse sensor with PWM control

PWM duty cycle

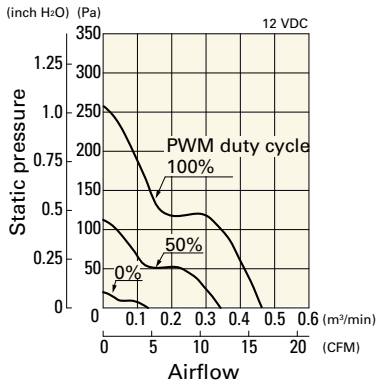

Operating voltage range

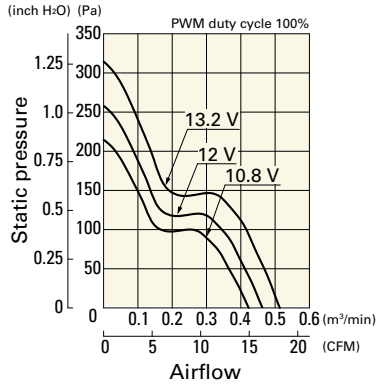

PWM duty - Speed characteristics example

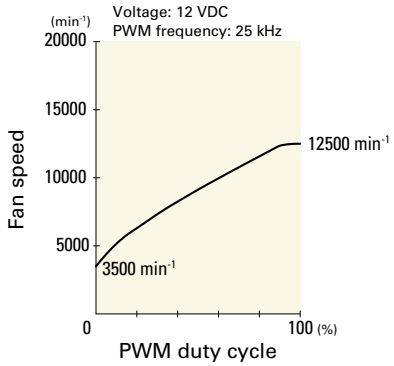

9GA0424P3J001 With pulse sensor with PWM control

PWM duty cycle

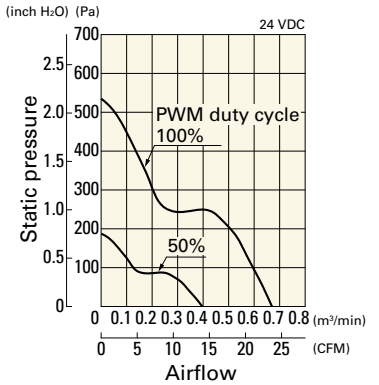

Operating voltage range

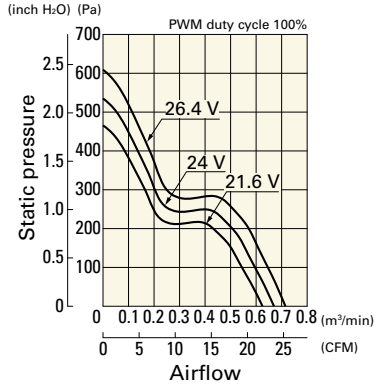

PWM duty - Speed characteristics example

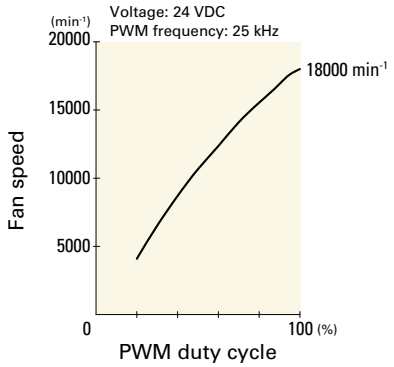

Airflow - Static Pressure Characteristics / PWM Duty - Speed Characteristics Example

9GA0424P3G001 With pulse sensor with PWM control

PWM duty cycle

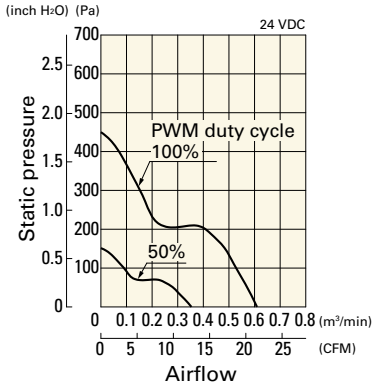

Operating voltage range

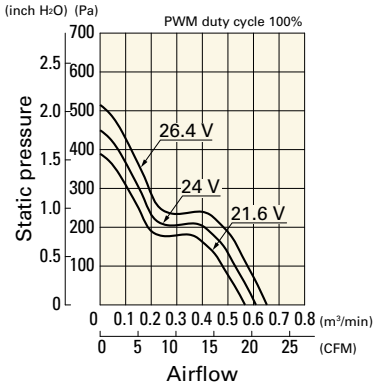

PWM duty - Speed characteristics example

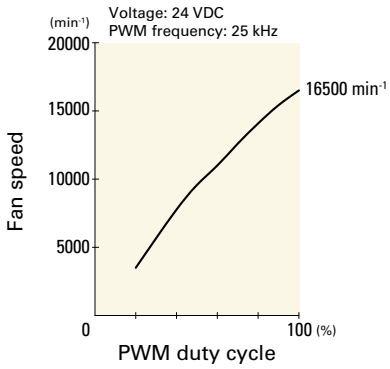

9GA0424P3H001 With pulse sensor with PWM control

PWM duty cycle

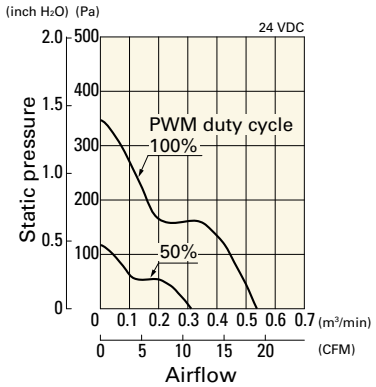

Operating voltage range

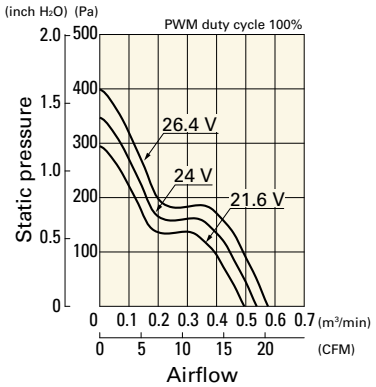

PWM duty - Speed characteristics example

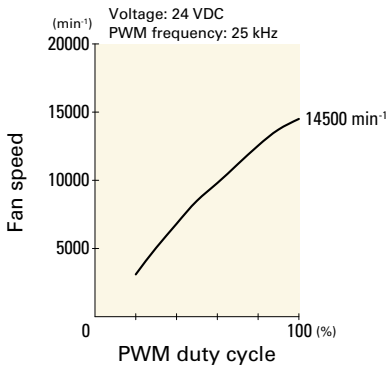

9GA0424P3M001 With pulse sensor with PWM control

PWM duty cycle

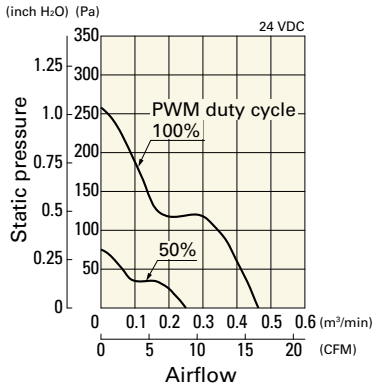

Operating voltage range

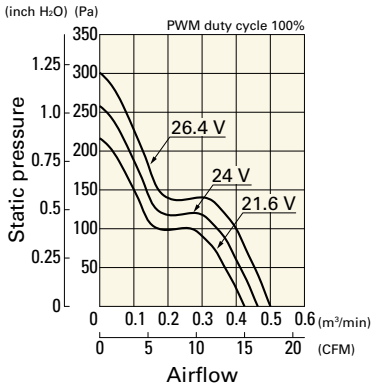

PWM duty - Speed characteristics example

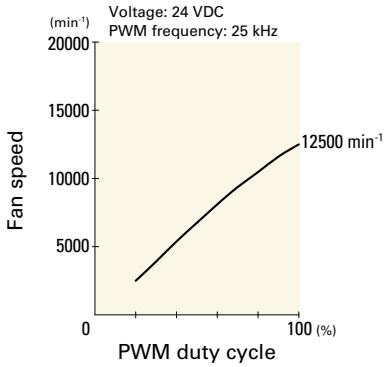

Airflow - Static Pressure Characteristics

9GA0412A301 With pulse sensor

Operating voltage range

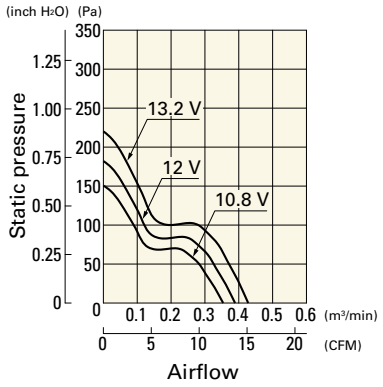

Dimensions (unit: mm) (Ribbed frame with pulse sensor with PWM control)

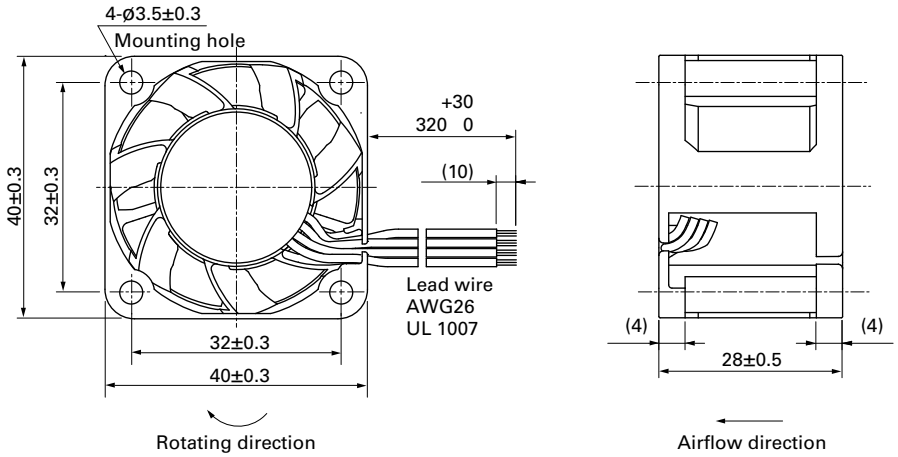

Reference Dimensions of Mounting Holes and Vent Opening (unit: mm)

Inlet side, Outlet side

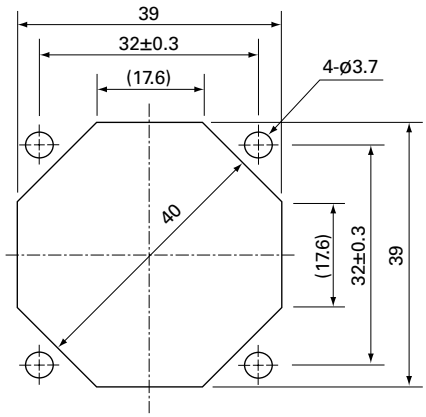

Options

Finger guards page: p. 590

Model no.: 109-059, 109-059H

40×40×28 mm

San Ace 40 9GE type Low Vibration Fan

General Specifications

- Material ..... Frame: Aluminum, Impeller: Plastic (Flammability: UL 94V-0)
- Expected life ..... See the table below. (L10 life: 90% survival rate for continuous operation in free air at 60˚C, rated voltage) Expected life at 40°C is for reference only.
- Motor protection function ..... Locked rotor burnout protection, Reverse polarity protection For details, please refer to p. 608.
- Dielectric strength ..... 50/60 Hz, 500 VAC, for 1 minute (between lead wire conductors and frame)
- Insulation resistance ..... 10 MΩ min. at 500 VDC (between lead wire conductors and frame)
- Sound pressure level (SPL) ..... A-weighted sound pressure level (SPL) at 1 m away from the air inlet.
- Storage temperature ..... -30 to +70˚C (Non-condensing)
- Lead wire ..... ⊕Red ⊖Black Sensor Yellow Control Brown
- Mass ..... 55 g

Specifications

The models listed below **have a pulse sensor with PWM control.**

Model no.	Rated voltage [V]	Operating voltage range [V]	PWM duty cycle* [%]	Rated current [A]	Rated input [W]	Rated speed [min⁻¹]	Max. airflow [m³/min]	Max. airflow [CFM]	Max. static pressure [Pa]	Max. static pressure [inchH₂O]	SPL [dB (A)]	Operating temperature [˚C]	Expected life [h]
9GE0412P3K03	12	10.8 to 13.2	100	0.84	10.08	16500	0.76	26.8	415	1.666	58	-20 to +60	40000/60˚C (70000/40˚C)
			0	0.07	0.84	3000	0.13	4.6	13	0.052	17		
9GE0412P3J03			100	0.65	7.8	15000	0.69	24.4	343.0	1.378	56		
			0	0.05	0.6	2650	0.12	4.2	10.7	0.042	14		
9GE0412P3G03			100	0.47	5.64	13000	0.6	21.2	260	1.044	52		
			0	0.05	0.6	2400	0.11	3.9	8.2	0.033	13		

PWM frequency is 25 kHz. Models without ratings for 0% PWM duty cycle have zero speed at 0%. When control terminal is open, speed is the same as at 100% duty cycle.

Note: Sensor and control options are available for selection. Refer to the table on p. 641.

Airflow - Static Pressure Characteristics / PWM Duty - Speed Characteristics Example

9GE0412P3K03 With pulse sensor with PWM control

PWM duty cycle

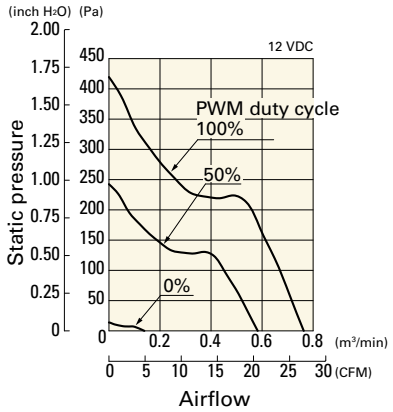

Operating voltage range

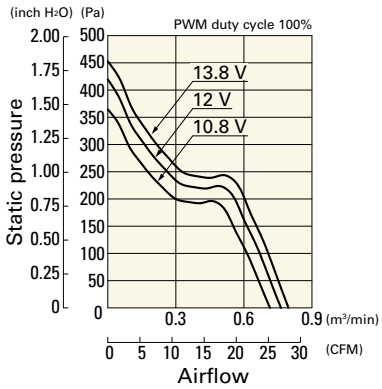

PWM duty - Speed characteristics example

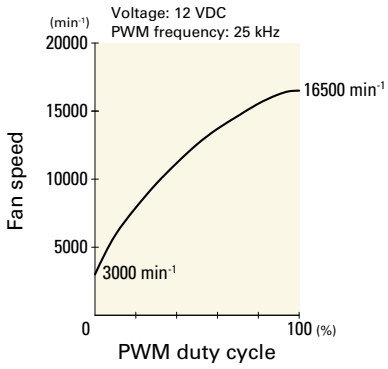

Airflow - Static Pressure Characteristics / PWM Duty - Speed Characteristics Example

9GE0412P3J03 With pulse sensor with PWM control

PWM duty cycle

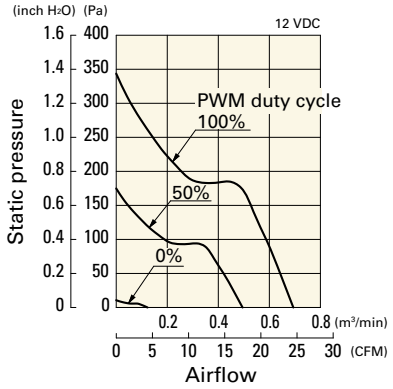

Operating voltage range

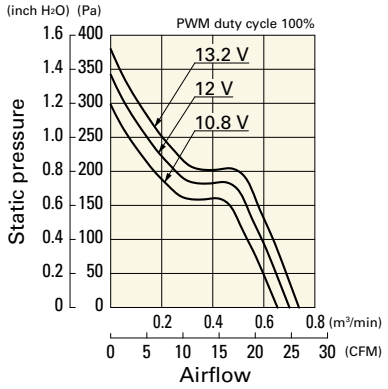

PWM duty - Speed characteristics example

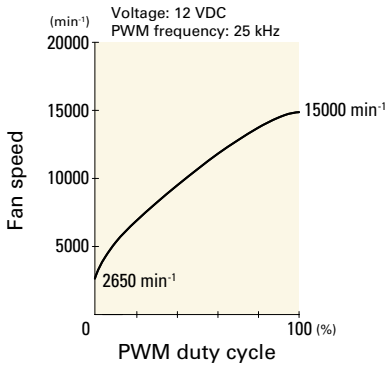

9GE0412P3G03 With pulse sensor with PWM control

PWM duty cycle

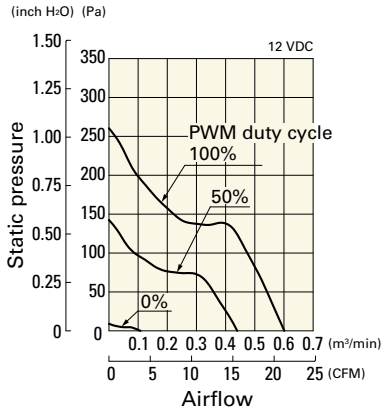

Operating voltage range

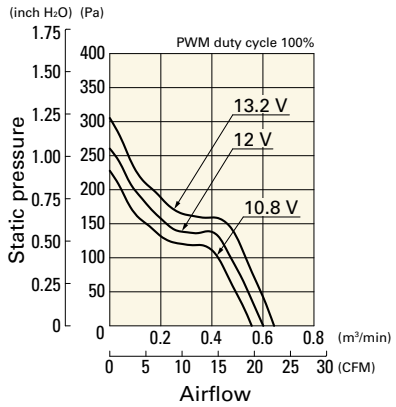

PWM duty - Speed characteristics example

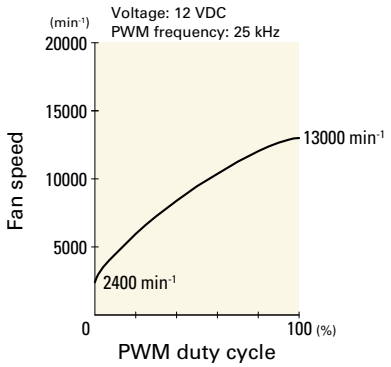

Dimensions (unit: mm)

Screw-mount the fan through both flanges.

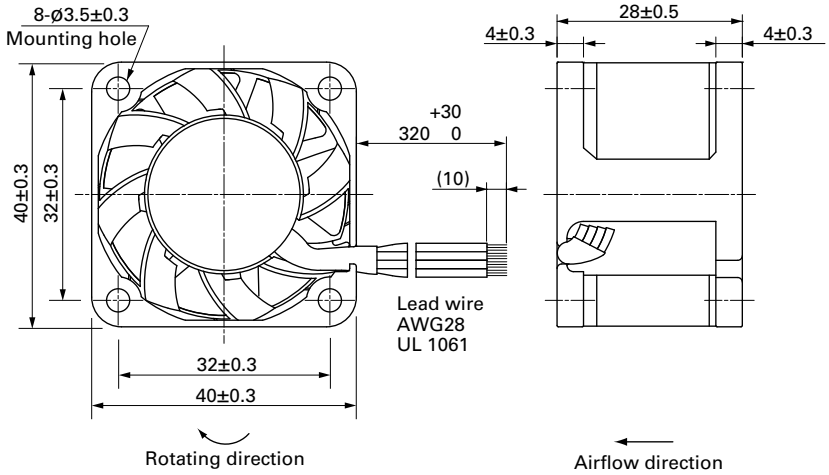

Reference Dimensions of Mounting Holes and Vent Opening (unit: mm)

Inlet side, Outlet side

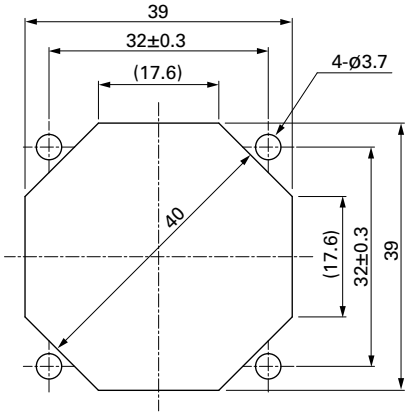

Options

Finger guards page: p. 590

Model no.: 109-059, 109-059H

DC Fan

40×40×28 mm

San Ace 40 9P type

General Specifications

- Material ..... Frame: Plastic (Flammability: UL 94V-0), Impeller: Plastic (Flammability: UL 94V-1)
- Expected life ..... See the table below. (L10 life: 90% survival rate for continuous operation in free air at 60˚C, rated voltage) Expected life at 40°C is for reference only.
- Motor protection function ..... Locked rotor burnout protection, Reverse polarity protection For details, please refer to p. 608.
- Dielectric strength ..... 50/60 Hz, 500 VAC, for 1 minute (between lead wire conductors and frame)
- Insulation resistance ..... 10 MΩ min. at 500 VDC (between lead wire conductors and frame)
- Sound pressure level (SPL) ..... A-weighted sound pressure level (SPL) at 1 m away from the air inlet.
- Storage temperature ..... -30 to +70˚C (Non-condensing)
- Lead wire ..... ⊕Red ⊖Black or Blue Sensor Yellow
- Mass ..... 52 g

Specifications

The models listed below **have ribs and a pulse sensor.**

Model no.	Rated voltage [V]	Operating voltage range [V]	Rated current [A]	Rated input [W]	Rated speed [min⁻¹]	Max. airflow [m³/min]	Max. airflow [CFM]	Max. static pressure [Pa]	Max. static pressure [inchH₂O]	SPL [dB (A)]	Operating temperature [˚C]	Expected life [h]
109P0405H3013	5	4.5 to 5.5	0.68	3.4	8700	0.32	11.3	102.9	0.414	37	-20 to +70	40000/60˚C (70000/40˚C)
109P0405F3013			0.28	1.4	6700	0.244	8.6	58.8	0.236	30		60000/60˚C (90000/40˚C)
109P0412G3013	12	7 to 13.2	0.31	3.72	11500	0.42	14.8	179	0.719	42	-20 to +60	40000/60˚C (70000/40˚C)
109P0412B3013		7 to 13.8	0.28	3.36	10300	0.38	13.4	143	0.574	40		
109P0412H3013			0.195	2.34	8700	0.32	11.3	102.9	0.414	37	-20 to +70	60000/60˚C (90000/40˚C)
109P0412F3013			0.105	1.26	6700	0.244	8.6	58.8	0.236	30		
109P0412M3013		10.2 to 13.8	0.045	0.54	4100	0.15	5.3	21.6	0.087	20		
109P0424G3013	24	12 to 26.4	0.19	4.56	11500	0.42	14.8	179	0.719	42	-20 to +60	40000/60˚C (70000/40˚C)
109P0424B3013			0.13	3.12	10300	0.38	13.4	143	0.574	40		
109P0424H3013		12 to 27.6	0.095	2.28	8700	0.32	11.3	102.9	0.414	37	-20 to +70	60000/60˚C (90000/40˚C)
109P0424F3013		14 to 27.6	0.055	1.32	6700	0.244	8.6	58.8	0.236	30		

Note 1: Sensor and control options are available for selection. Refer to the table on p. 635.
Note 2: The » mark indicates Short LeadTime Service applicable models. See p. 664 for details.

Airflow - Static Pressure Characteristics

109P0405H3013 With pulse sensor

Operating voltage range

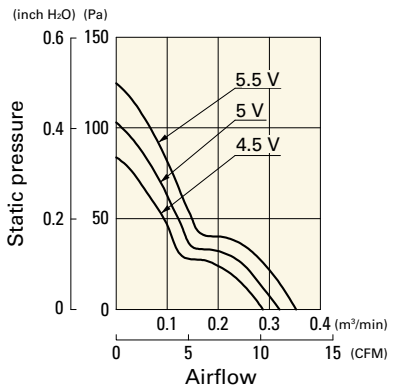

109P0405F3013 With pulse sensor

Operating voltage range

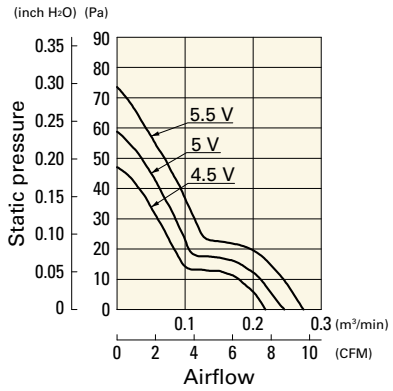

109P0412G3013 With pulse sensor

Operating voltage range

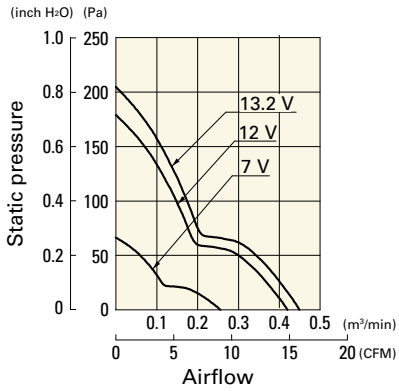

Airflow - Static Pressure Characteristics

109P0412B3013 With pulse sensor

Operating voltage range

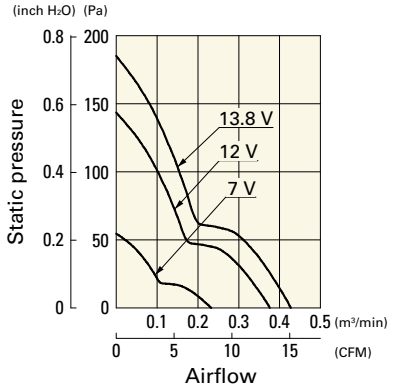

109P0412H3013 With pulse sensor

Operating voltage range

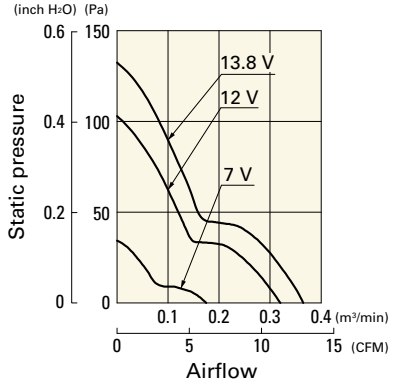

109P0412F3013 With pulse sensor

Operating voltage range

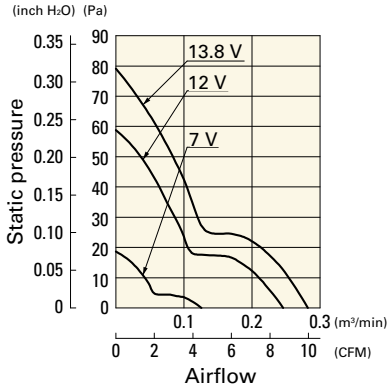

109P0412M3013 With pulse sensor

Operating voltage range

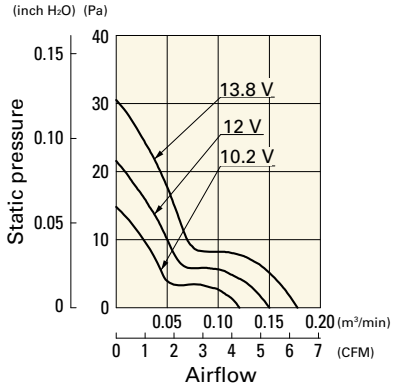

109P0424G3013 With pulse sensor

Operating voltage range

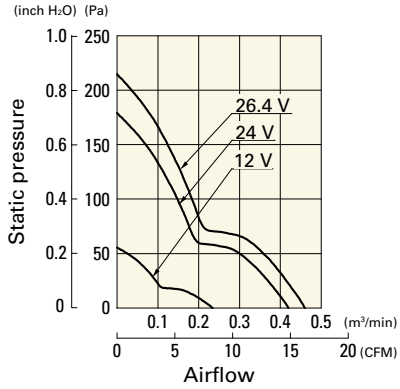

109P0424B3013 With pulse sensor

Operating voltage range

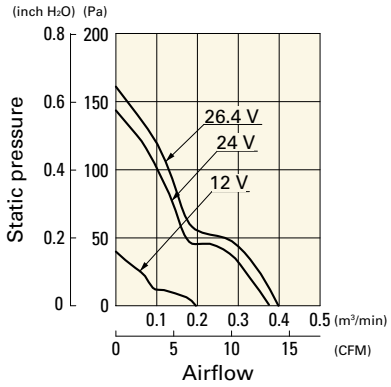

109P0424H3013 With pulse sensor

Operating voltage range

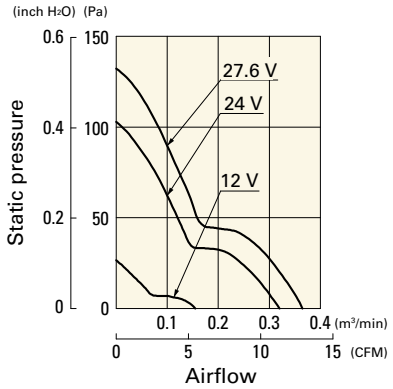

109P0424F3013 With pulse sensor

Operating voltage range

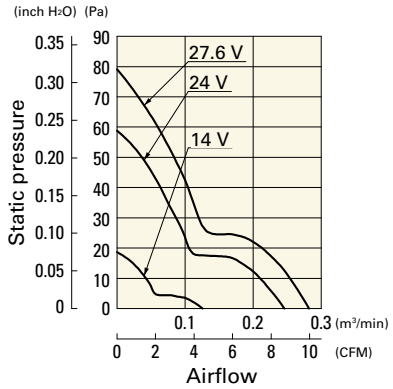

Dimensions (unit: mm)

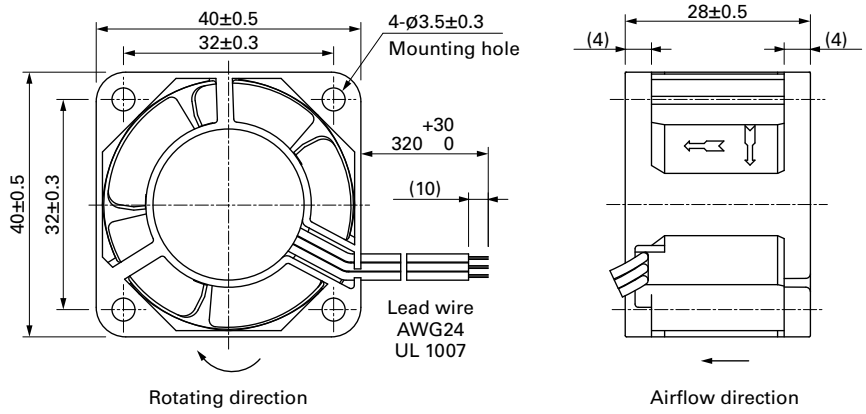

Reference Dimensions of Mounting Holes and Vent Opening (unit: mm)

Inlet side, Outlet side

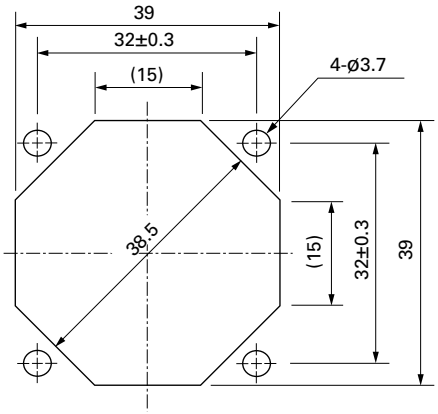

Options

Finger guards page: p. 590

Model no.: 109-059, 109-059H

52×52×15 mm

San Ace 52 9GA type Low Power Consumption Fan

General Specifications

- Material ..... Frame: Plastic (Flammability: UL 94V-0), Impeller: Plastic (Flammability: UL 94V-0)
- Expected life ..... See the table below. (L10 life: 90% survival rate for continuous operation in free air at 60˚C, rated voltage) Expected life at 40°C is for reference only.
- Motor protection function ..... Locked rotor burnout protection, Reverse polarity protection For details, please refer to p. 608.
- Dielectric strength ..... 50/60 Hz, 500 VAC, for 1 minute (between lead wire conductors and frame)
- Insulation resistance ..... 10 MΩ min. at 500 VDC (between lead wire conductors and frame)
- Sound pressure level (SPL) ..... A-weighted sound pressure level (SPL) at 1 m away from the air inlet.
- Storage temperature ..... -30 to +70˚C (Non-condensing)
- Lead wire ..... ⊕Red ⊖Black Sensor Yellow Control Brown
- Mass ..... 40 g

Specifications

The models listed below **have ribs and a pulse sensor with PWM control.**

Model no.	Rated voltage [V]	Operating voltage range [V]	PWM duty cycle* [%]	Rated current [A]	Rated input [W]	Rated speed [min⁻¹]	Max. airflow [m³/min]	Max. airflow [CFM]	Max. static pressure [Pa]	Max. static pressure [inchH₂O]	SPL [dB (A)]	Operating temperature [˚C]	Expected life [h]
9GA0512P7G001	12	10.2 to 13.8	100	0.13	1.56	7800	0.5	17.7	91.5	0.367	38	-20 to +70	40000/60˚C (70000/40˚C)
9GA0512P7A001			100	0.08	0.96	6300	0.4	14.1	59	0.237	32		
9GA0512P7H001			100	0.05	0.6	4300	0.275	9.7	27.5	0.11	22		
9GA0512P7M001			100	0.04	0.48	3400	0.215	7.6	17	0.068	16		
9GA0524P7G001	24	20.4 to 27.6	100	0.07	1.68	7800	0.5	17.7	91.5	0.367	38		
9GA0524P7A001			100	0.05	1.2	6300	0.4	14.1	59.0	0.237	32		
9GA0524P7H001			100	0.03	0.72	4300	0.275	9.7	27.5	0.11	22		
9GA0524P7M001			100	0.02	0.48	3400	0.215	7.6	17.0	0.068	16		

PWM frequency is 25 kHz. Models without ratings for 0% PWM duty cycle have zero speed at 0%. When control terminal is open, speed is the same as at 100% duty cycle.

Note 1: Sensor and control options are available for selection. Refer to the table on p. 638.
Note 2: The » mark indicates Short LeadTime Service applicable models. See p. 664 for details.

Airflow - Static Pressure Characteristics / PWM Duty - Speed Characteristics Example

9GA0512P7G001 With pulse sensor with PWM control

PWM duty cycle

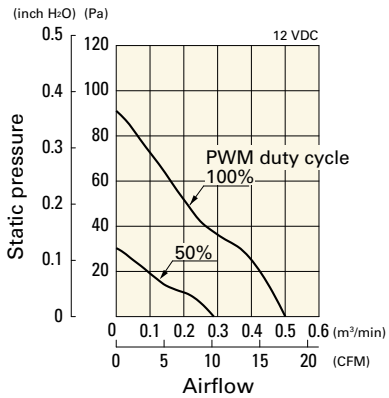

Operating voltage range

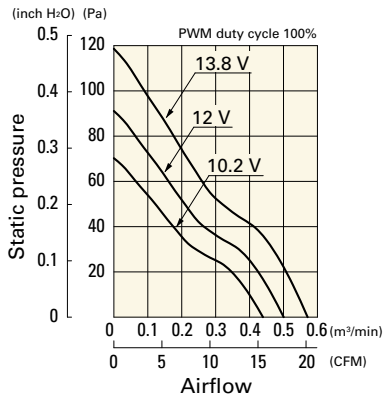

PWM duty - Speed characteristics example

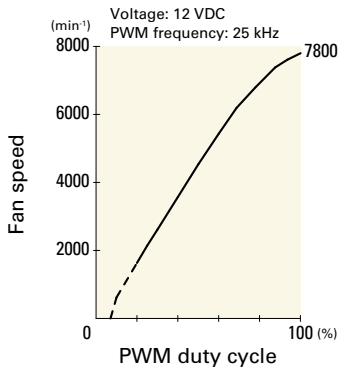

Airflow - Static Pressure Characteristics / PWM Duty - Speed Characteristics Example

9GA0512P7A001 With pulse sensor with PWM control

PWM duty cycle

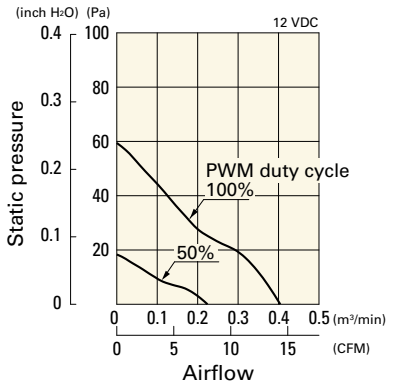

Operating voltage range

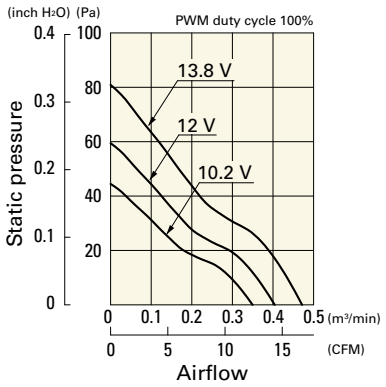

PWM duty - Speed characteristics example

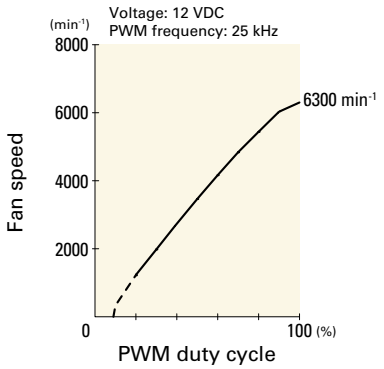

9GA0512P7H001 With pulse sensor with PWM control

PWM duty cycle

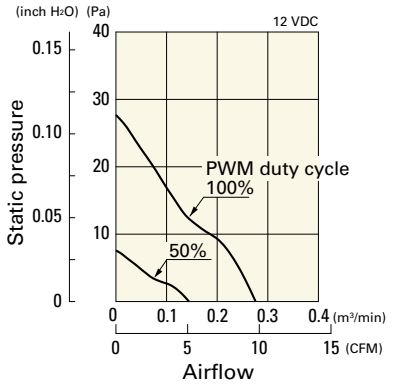

Operating voltage range

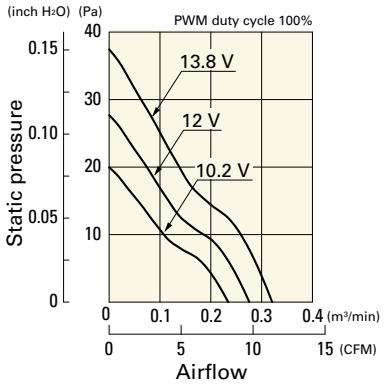

PWM duty - Speed characteristics example

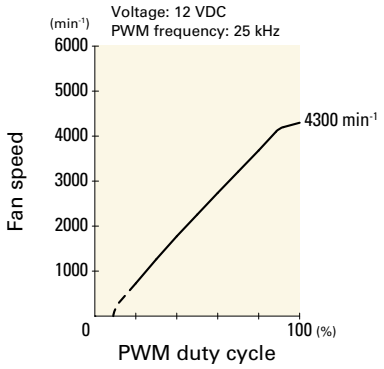

9GA0512P7M001 With pulse sensor with PWM control

PWM duty cycle

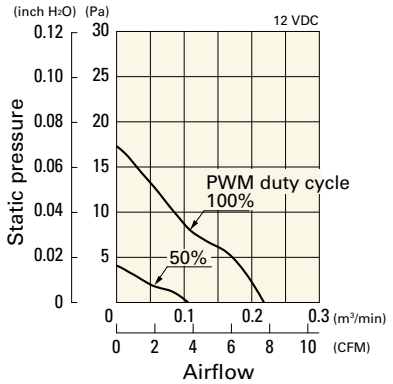

Operating voltage range

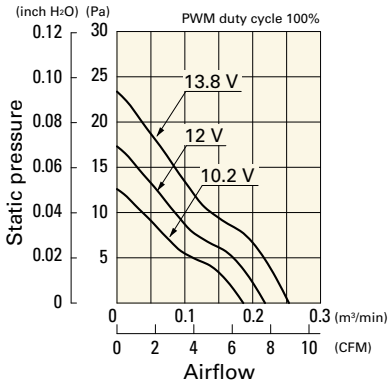

PWM duty - Speed characteristics example

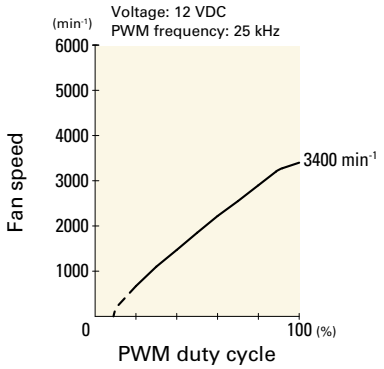

9GA0524P7G001 With pulse sensor with PWM control

PWM duty cycle

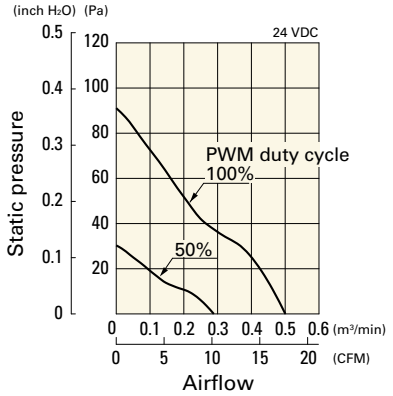

Operating voltage range

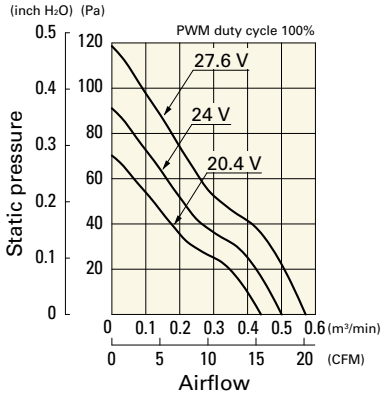

PWM duty - Speed characteristics example

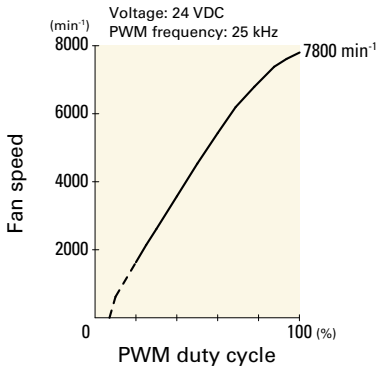

Airflow - Static Pressure Characteristics / PWM Duty - Speed Characteristics Example

9GA0524P7A001 With pulse sensor with PWM control

PWM duty cycle

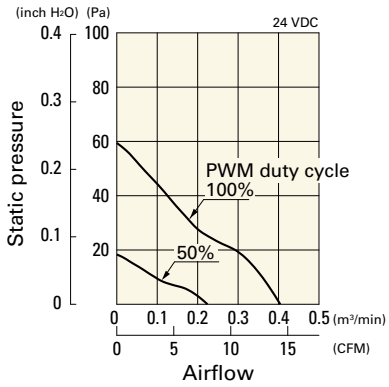

Operating voltage range

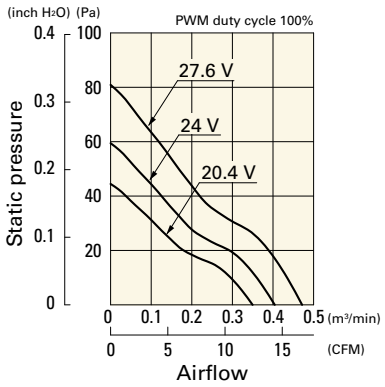

PWM duty - Speed characteristics example

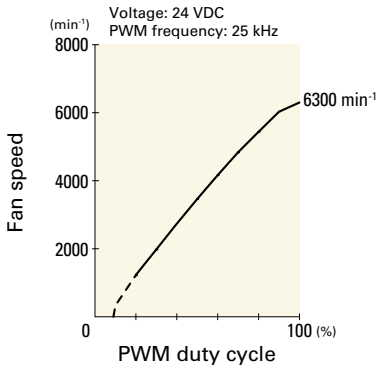

9GA0524P7H001 With pulse sensor with PWM control

PWM duty cycle

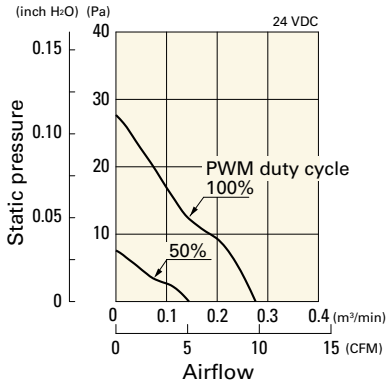

Operating voltage range

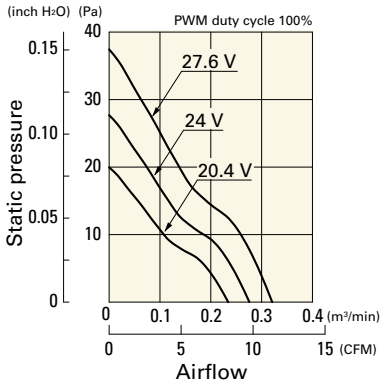

PWM duty - Speed characteristics example

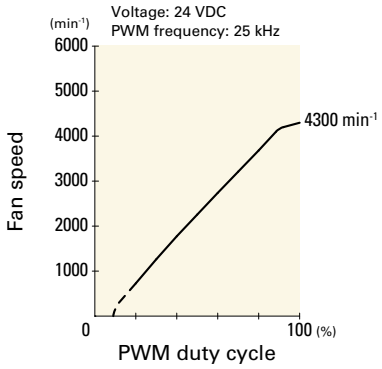

9GA0524P7M001 With pulse sensor with PWM control

PWM duty cycle

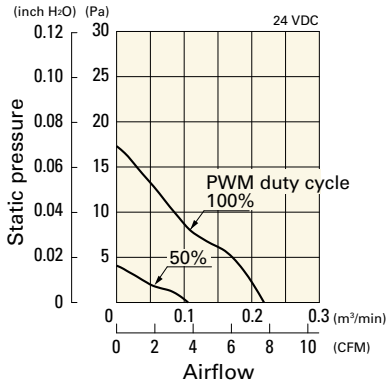

Operating voltage range

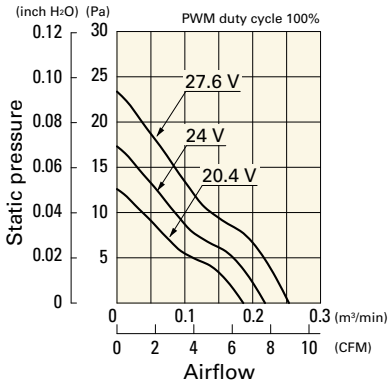

PWM duty - Speed characteristics example

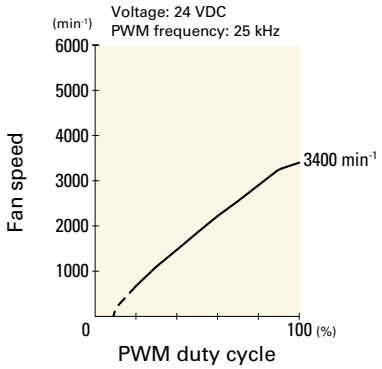

Dimensions (unit: mm)

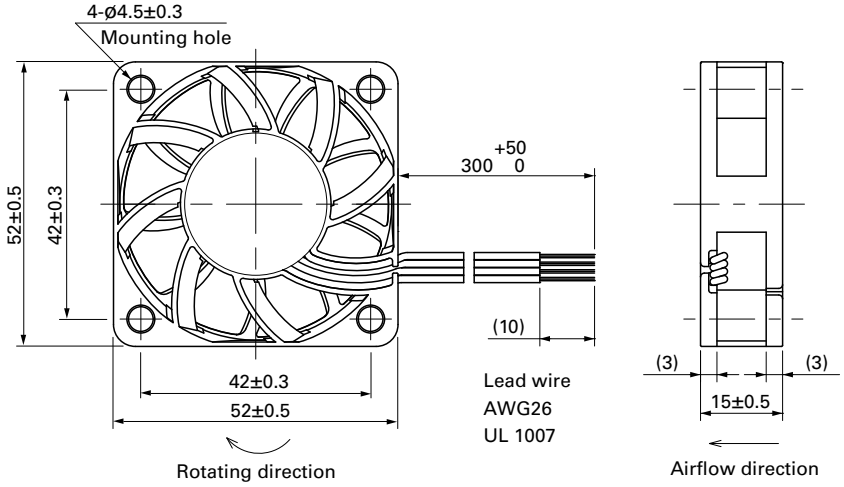

Reference Dimensions of Mounting Holes and Vent Opening (unit: mm)

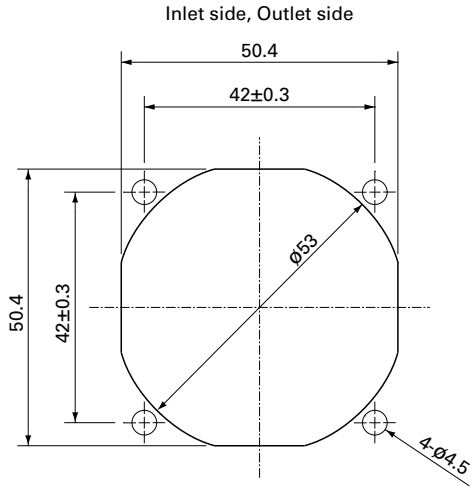

Options

Finger guards page: p. 590

Model no.: 109-1156

60×60×10 mm

San Ace 60 9GA type Low Power Consumption Fan

General Specifications

- Material ..... Frame: Plastic (Flammability: UL 94V-0), Impeller: Plastic (Flammability: UL 94V-0)
- Expected life ..... See the table below. (L10 life: 90% survival rate for continuous operation in free air at 60˚C, rated voltage) Expected life at 40°C is for reference only.
- Motor protection function ..... Locked rotor burnout protection, Reverse polarity protection For details, please refer to p. 608.
- Dielectric strength ..... 50/60 Hz, 500 VAC, for 1 minute (between lead wire conductors and frame)
- Insulation resistance ..... 10 MΩ min. at 500 VDC (between lead wire conductors and frame)
- Sound pressure level (SPL) ..... A-weighted sound pressure level (SPL) at 1 m away from the air inlet.
- Storage temperature ..... -30 to +70˚C (Non-condensing)
- Lead wire ..... ⊕Red ⊖Black Sensor Yellow
- Mass ..... 35 g

Specifications

The models listed below **have ribs and a pulse sensor.**

Model no.	Rated voltage [V]	Operating voltage range [V]	Rated current [A]	Rated input [W]	Rated speed [min⁻¹]	Max. airflow [m³/min]	Max. airflow [CFM]	Max. static pressure [Pa]	Max. static pressure [inchH₂O]	SPL [dB (A)]	Operating temperature [˚C]	Expected life [h]
9GA0612G9001	12	7.0 to 13.2	0.27	3.24	6200	0.62	21.9	66	0.26	43	-20 to +60	40000/60˚C (70000/40˚C)
9GA0612H9001		7.0 to 13.8	0.14	1.68	5000	0.5	17.6	42.9	0.17	37	-20 to +70	
9GA0612L9001			0.03	0.36	2300	0.23	8.1	9.1	0.037	17	-10 to +70	

Note 1: Sensor and control options are available for selection. Refer to the table on p. 638.
Note 2: The » mark indicates Short LeadTime Service applicable models. See p. 664 for details.

Airflow - Static Pressure Characteristics

9GA0612G9001 With pulse sensor

Operating voltage range

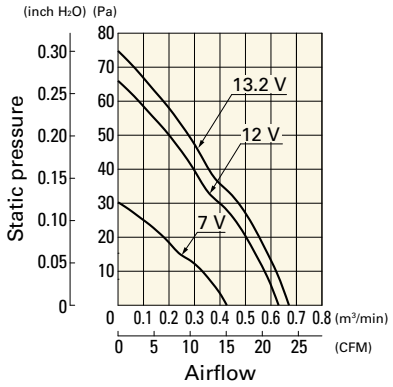

9GA0612H9001 With pulse sensor

Operating voltage range

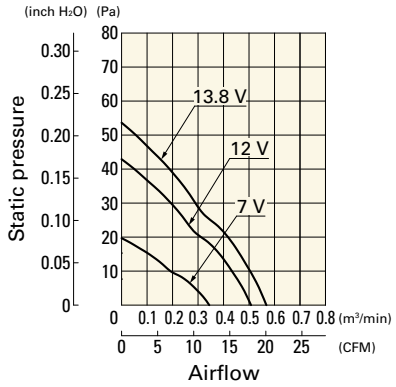

9GA0612L9001 With pulse sensor

Operating voltage range

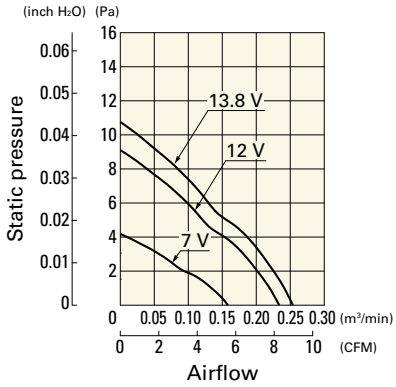

Dimensions (unit: mm)

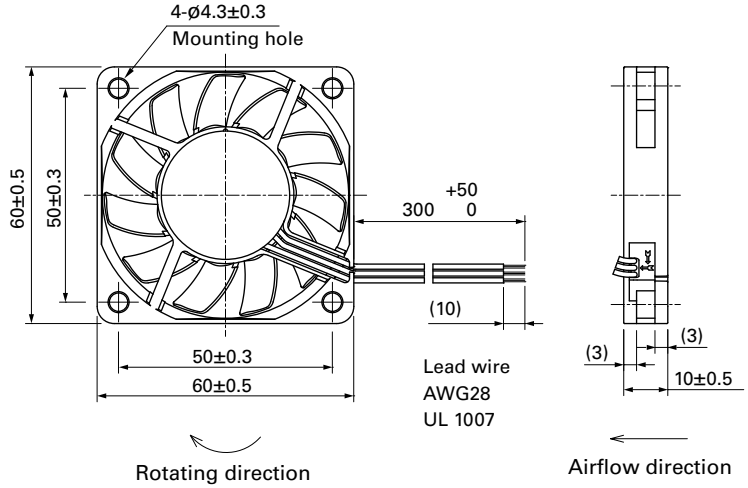

Reference Dimensions of Mounting Holes and Vent Opening (unit: mm)

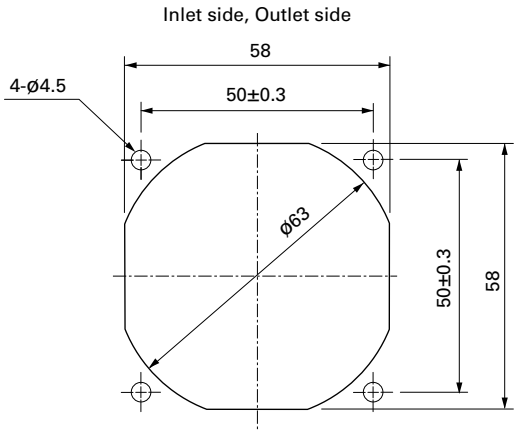

Options

Finger guards page: p. 590

Model no.: 109-139E, 109-139H

Resin filter kits page: p. 598

Model no.: 109-1003F13 (13PPI), 109-1003F20 (20PPI),
109-1003F30 (30PPI), 109-1003F40 (40PPI)

Resin finger guards page: p. 597

Model no.: 109-1003G

60×60×15 mm

San Ace 60 9GA type Low Power Consumption Fan

General Specifications

- Material ..... Frame: Plastic (Flammability: UL 94V-0), Impeller: Plastic (Flammability: UL 94V-0)
- Expected life ..... See the table below. (L10 life: 90% survival rate for continuous operation in free air at 60˚C, rated voltage) Expected life at 40°C is for reference only.
- Motor protection function ..... Locked rotor burnout protection, Reverse polarity protection For details, please refer to p. 608.
- Dielectric strength ..... 50/60 Hz, 500 VAC, for 1 minute (between lead wire conductors and frame)
- Insulation resistance ..... 10 MΩ min. at 500 VDC (between lead wire conductors and frame)
- Sound pressure level (SPL) ..... A-weighted sound pressure level (SPL) at 1 m away from the air inlet.
- Storage temperature ..... -30 to +70˚C (Non-condensing)
- Lead wire ..... ⊕Red ⊖Black Sensor Yellow Control Brown (For models without PWM control, there is no speed control wiring.)
- Mass ..... 50 g

Specifications

The models listed below **have ribs and a pulse sensor with PWM control.**

Model no.	Rated voltage [V]	Operating voltage range [V]	PWM duty cycle* [%]	Rated current [A]	Rated input [W]	Rated speed [min⁻¹]	Max. airflow [m³/min]	Max. airflow [CFM]	Max. static pressure [Pa]	Max. static pressure [inchH₂O]	SPL [dB (A)]	Operating temperature [˚C]	Expected life [h]
9GA0612P7G01	12	10.2 to 13.8	100	0.16	1.92	5900	0.68	24.0	80	0.32	38	-20 to +70	40000/60˚C (70000/40˚C)
			0	0.05	0.6	1500	0.17	6.0	5.2	0.02	10		
9GA0612P7H01			100	0.1	1.2	4900	0.56	19.7	55.6	0.223	34		
			0	0.03	0.36	1300	0.15	5.3	3.9	0.015	8		
9GA0624P7G01	24	20.4 to 27.6	100	0.08	1.92	5900	0.68	24.0	80	0.32	38		

PWM frequency is 25 kHz. Models without ratings for 0% PWM duty cycle have zero speed at 0%. When control terminal is open, speed is the same as at 100% duty cycle.

The models listed below **have ribs and a pulse sensor.**

Model no.	Rated voltage [V]	Operating voltage range [V]	Rated current [A]	Rated input [W]	Rated speed [min⁻¹]	Max. airflow [m³/min]	Max. airflow [CFM]	Max. static pressure [Pa]	Max. static pressure [inchH₂O]	SPL [dB (A)]	Operating temperature [˚C]	Expected life [h]
9GA0612G701	12	6 to 13.8	0.16	1.92	5900	0.68	24	80	0.32	38	-20 to +70	40000/60˚C (70000/40˚C)
9GA0612H701			0.1	1.2	4900	0.56	19.7	55.6	0.223	34		
9GA0612M701			0.08	0.96	3900	0.45	15.9	35.3	0.142	28		60000/60˚C (90000/40˚C)
9GA0612L701			0.03	0.36	2800	0.31	10.9	18	0.072	17		
9GA0612B701		10.2 to 13.8	0.025	0.3	2000	0.22	7.8	9.8	0.039	10		40000/60˚C (70000/40˚C)
9GA0624M701	24	12 to 27.6	0.05	1.2	3900	0.45	15.9	35.3	0.142	28		
9GA0624L701		20.4 to 27.6	0.02	0.48	2800	0.31	10.9	18	0.072	17		

Note 1: Sensor and control options are available for selection. Refer to the table on pp. 638 to 639.
Note 2: The mark indicates Short LeadTime Service applicable models. See p. 664 for details.

Airflow - Static Pressure Characteristics / PWM Duty - Speed Characteristics Example

9GA0612P7G01 With pulse sensor with PWM control

PWM duty cycle

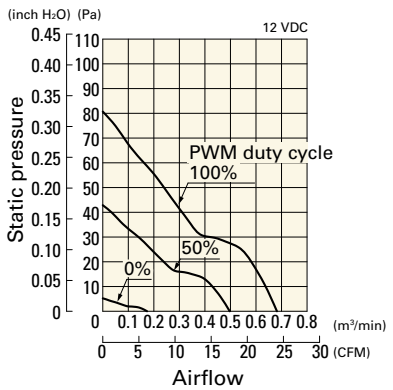

Operating voltage range

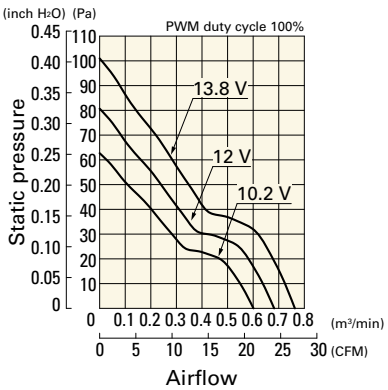

PWM duty - Speed characteristics example

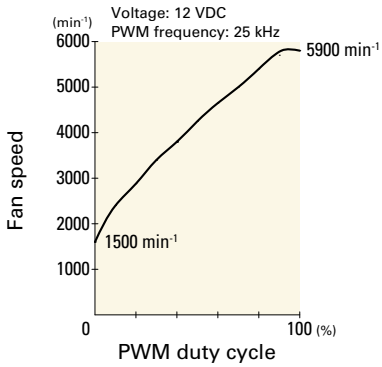

Airflow - Static Pressure Characteristics / PWM Duty - Speed Characteristics Example

9GA0612P7H01 With pulse sensor with PWM control

PWM duty cycle

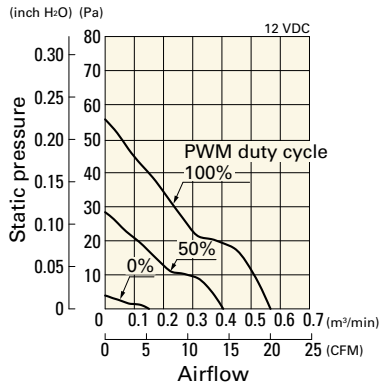

Operating voltage range

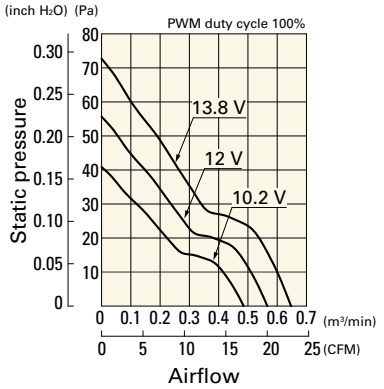

PWM duty - Speed characteristics example

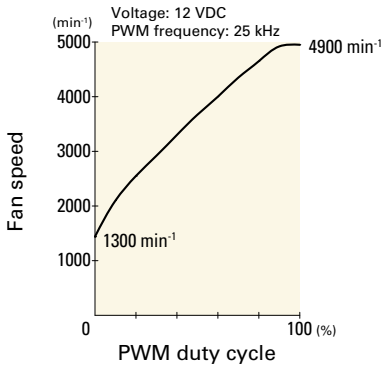

9GA0624P7G01 With pulse sensor with PWM control

PWM duty cycle

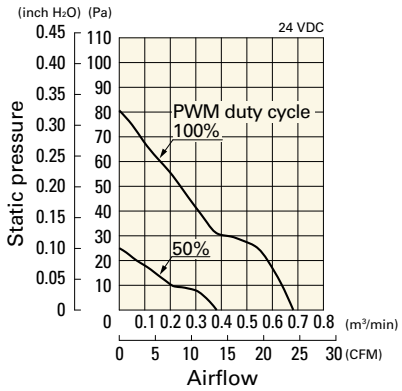

Operating voltage range

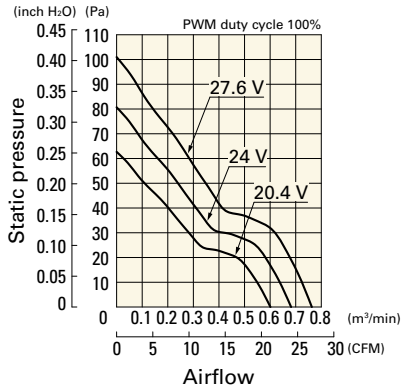

PWM duty - Speed characteristics example

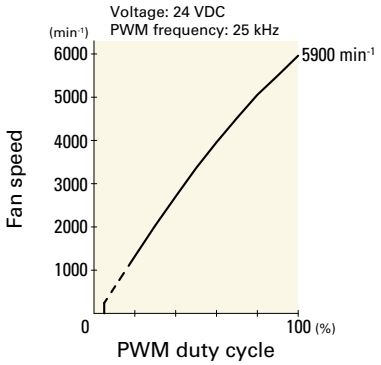

Airflow - Static Pressure Characteristics

9GA0612G701 With pulse sensor

Operating voltage range

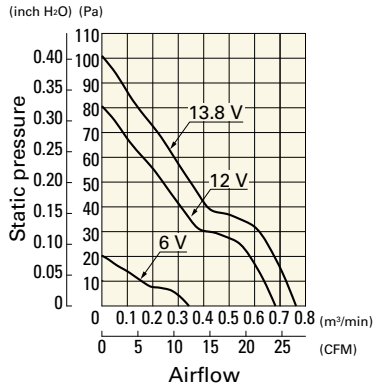

9GA0612H701 With pulse sensor

Operating voltage range

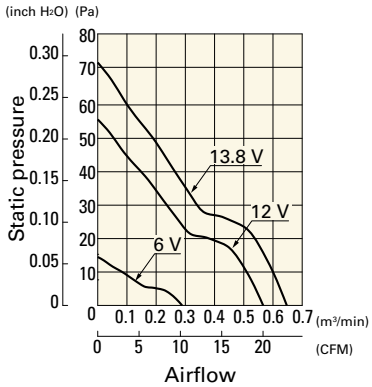

9GA0612M701 With pulse sensor

Operating voltage range

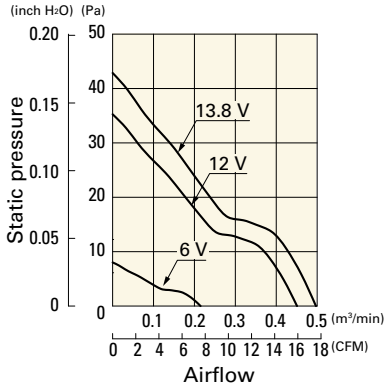

Airflow - Static Pressure Characteristics

9GA0612L701 With pulse sensor

Operating voltage range

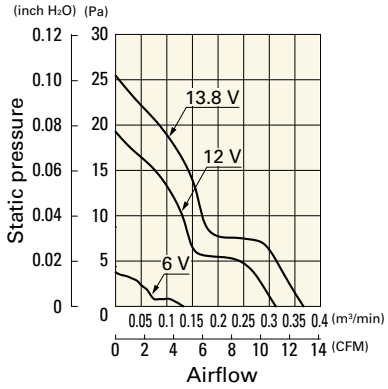

9GA0612B701 With pulse sensor

Operating voltage range

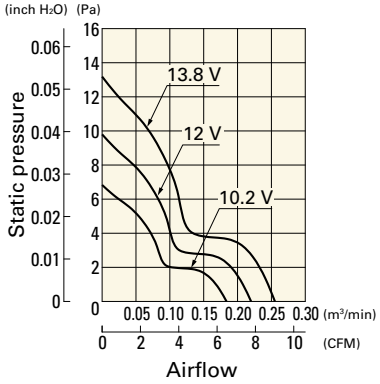

9GA0624M701 With pulse sensor

Operating voltage range

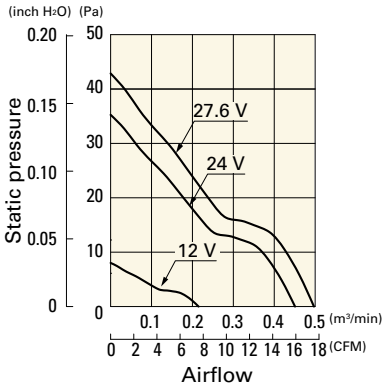

9GA0624L701 With pulse sensor

Operating voltage range

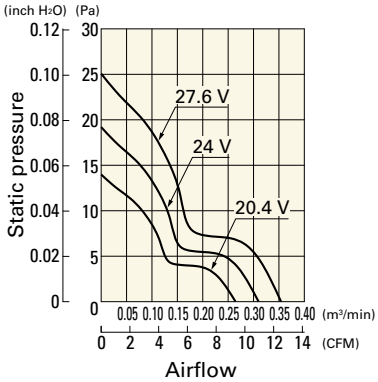

Dimensions (unit: mm) (With pulse sensor with PWM control)

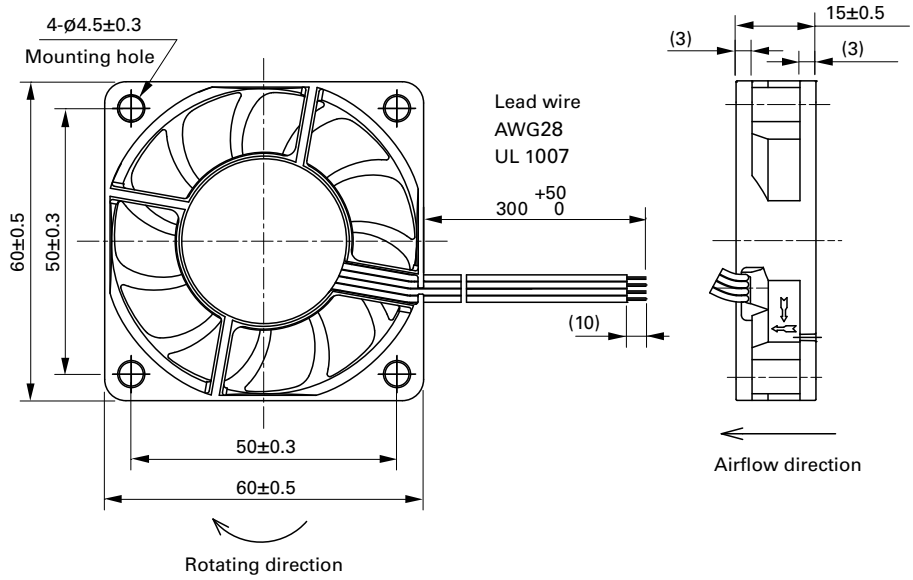

Reference Dimensions of Mounting Holes and Vent Opening (unit: mm)

Inlet side, Outlet side

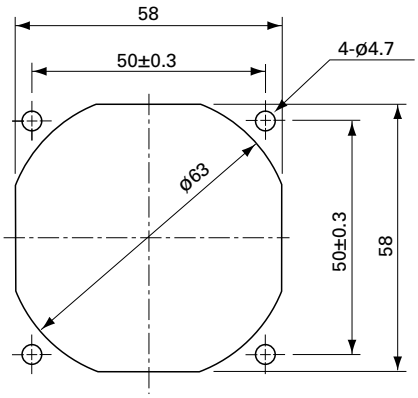

Options

Finger guards page: p. 590

Model no.: 109-139E, 109-139H

Resin filter kits page: p. 598

Model no.: 109-1003F13 (13PPI), 109-1003F20 (20PPI),
109-1003F30 (30PPI), 109-1003F40 (40PPI)

Resin finger guards page: p. 597

Model no.: 109-1003G

60×60×20 mm

San Ace 60 9GA type Low Power Consumption Fan

General Specifications

- Material ..... Frame: Plastic (Flammability: UL 94V-0), Impeller: Plastic (Flammability: UL 94V-0)
- Expected life ..... See the table below. (L10 life: 90% survival rate for continuous operation in free air at 60˚C, rated voltage) Expected life at 40°C is for reference only.
- Motor protection function ..... Locked rotor burnout protection, Reverse polarity protection For details, please refer to p. 608.
- Dielectric strength ..... 50/60 Hz, 500 VAC, for 1 minute (between lead wire conductors and frame)
- Insulation resistance ..... 10 MΩ min. at 500 VDC (between lead wire conductors and frame)
- Sound pressure level (SPL) ..... A-weighted sound pressure level (SPL) at 1 m away from the air inlet.
- Storage temperature ..... -30 to +70˚C (Non-condensing)
- Lead wire ..... ⊕Red ⊖Black Sensor Yellow Control Brown (For models without PWM control, there is no speed control wiring.)
- Mass ..... 70 g

Specifications

The models listed below **have ribs and a pulse sensor with PWM control.**

Model no.	Rated voltage [V]	Operating voltage range [V]	PWM duty cycle* [%]	Rated current [A]	Rated input [W]	Rated speed [min⁻¹]	Max. airflow [m³/min]	Max. airflow [CFM]	Max. static pressure [Pa]	Max. static pressure [inchH₂O]	SPL [dB (A)]	Operating temperature [˚C]	Expected life [h]
9GA0612P6G001	12	10.8 to 13.2	100	0.26	3.12	6850	0.88	31.1	125	0.5	43	-20 to +70	40000/60˚C (70000/40˚C)
9GA0612P6S001			100	0.15	1.8	5500	0.7	24.7	81	0.33	36		
9GA0624P6G001	24	21.6 to 26.4	100	0.12	2.88	6850	0.88	31.1	125	0.5	43		
9GA0624P6S001			100	0.07	1.68	5500	0.7	24.7	81	0.33	36		

PWM frequency is 25 kHz. Models without ratings for 0% PWM duty cycle have zero speed at 0%. When control terminal is open, speed is the same as at 100% duty cycle.

The models listed below **have ribs and a pulse sensor.**

Model no.	Rated voltage [V]	Operating voltage range [V]	Rated current [A]	Rated input [W]	Rated speed [min⁻¹]	Max. airflow [m³/min]	Max. airflow [CFM]	Max. static pressure [Pa]	Max. static pressure [inchH₂O]	SPL [dB (A)]	Operating temperature [˚C]	Expected life [h]
9GA0612H6001	12	10.8 to 13.2	0.09	1.08	4100	0.52	18.4	45	0.18	29	-20 to +70	60000/60˚C (90000/40˚C)
9GA0612M6001			0.05	0.6	2700	0.34	12.0	20	0.08	18		
9GA0624H6001	24	21.6 to 26.4	0.04	0.96	4100	0.52	18.4	45	0.18	29		
9GA0624M6001			0.03	0.72	2700	0.34	12.0	20	0.08	18		

Note 1: Sensor and control options are available for selection. Refer to the table on pp. 638 to 639.
Note 2: The » mark indicates Short LeadTime Service applicable models. See p. 664 for details.

Airflow - Static Pressure Characteristics / PWM Duty - Speed Characteristics Example

9GA0612P6G001 With pulse sensor with PWM control

PWM duty cycle

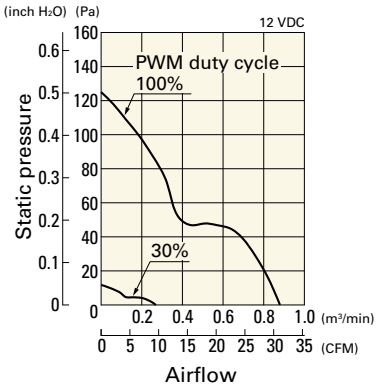

Operating voltage range

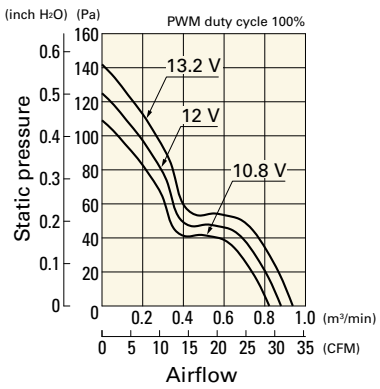

PWM duty - Speed characteristics example

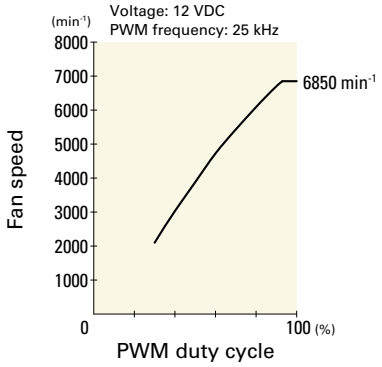

Airflow - Static Pressure Characteristics / PWM Duty - Speed Characteristics Example

9GA0612P6S001 With pulse sensor with PWM control

PWM duty cycle

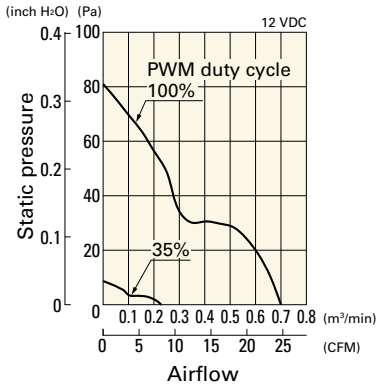

Operating voltage range

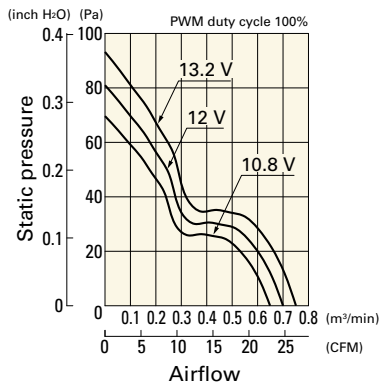

PWM duty - Speed characteristics example

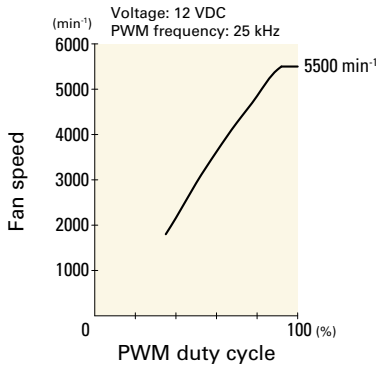

9GA0624P6G001 With pulse sensor with PWM control

PWM duty cycle

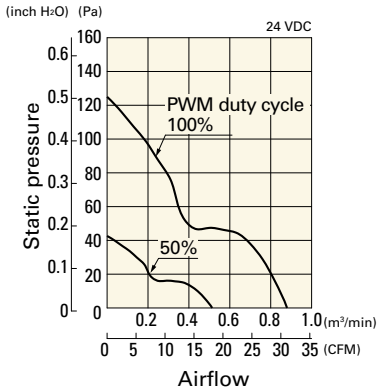

Operating voltage range

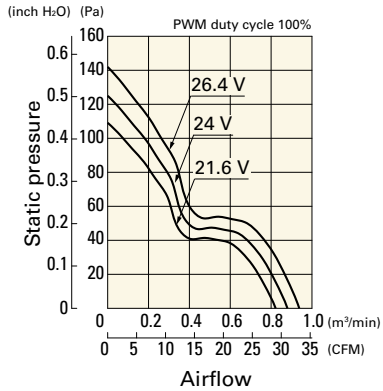

PWM duty - Speed characteristics example

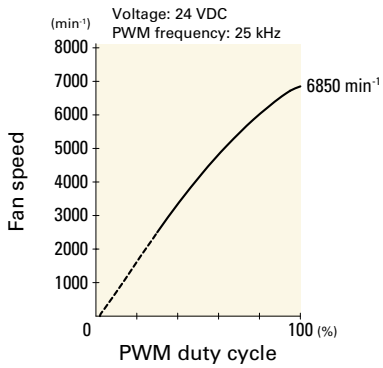

9GA0624P6S001 With pulse sensor with PWM control

PWM duty cycle

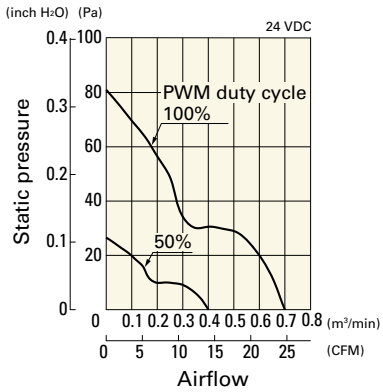

Operating voltage range

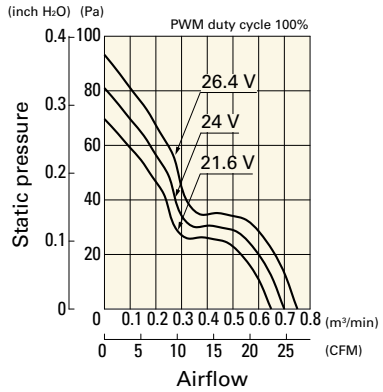

PWM duty - Speed characteristics example

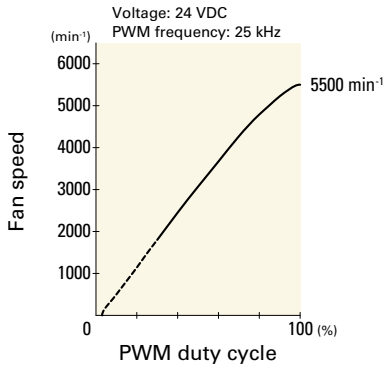

Airflow - Static Pressure Characteristics

9GA0612H6001 With pulse sensor

Operating voltage range

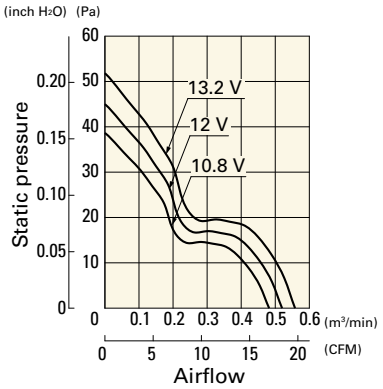

9GA0612M6001 With pulse sensor

Operating voltage range

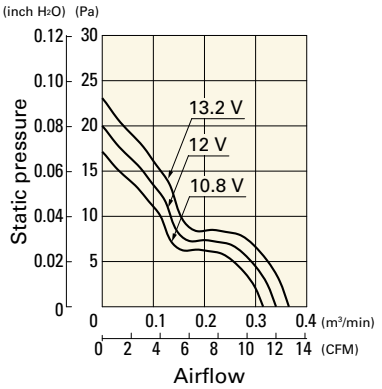

9GA0624H6001 With pulse sensor

Operating voltage range

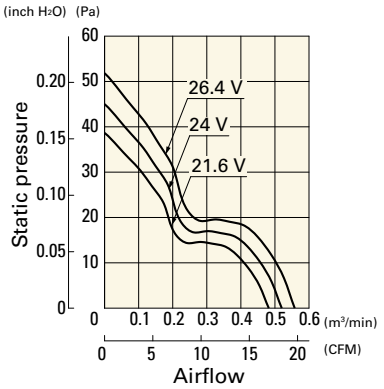

9GA0624M6001 With pulse sensor

Operating voltage range

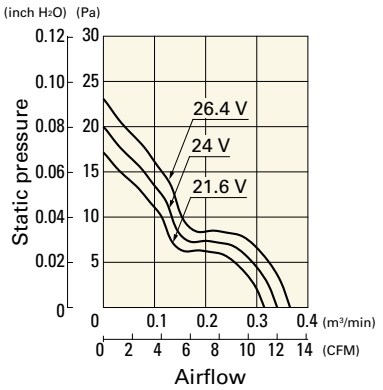

Dimensions (unit: mm) (With pulse sensor with PWM control)

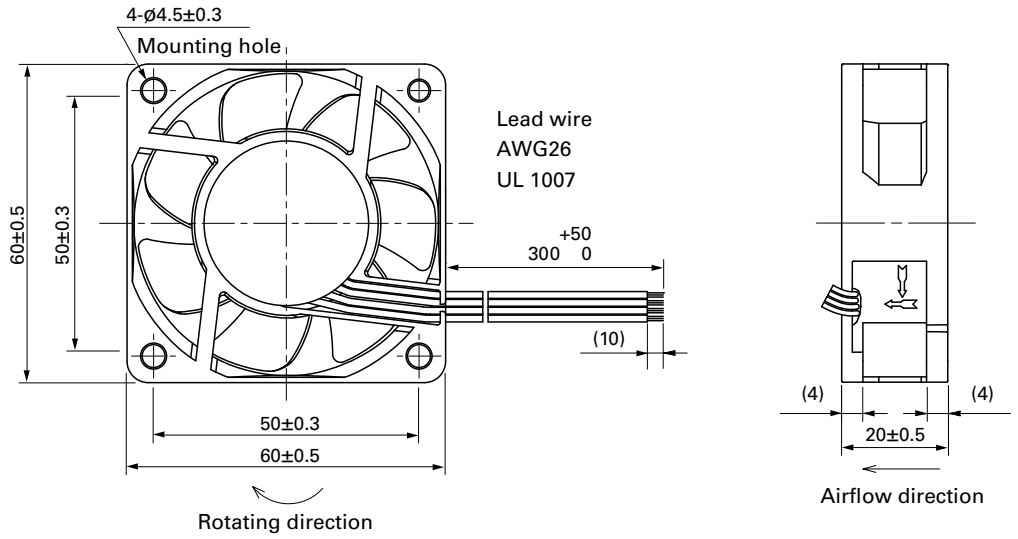

Reference Dimensions of Mounting Holes and Vent Opening (unit: mm)

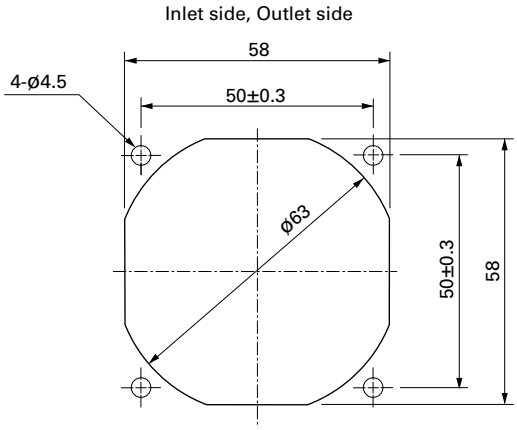

Options

Finger guards page: p. 590

Model no.: 109-139E, 109-139H

Resin filter kits page: p. 598

Model no.: 109-1003F13 (13PPI), 109-1003F20 (20PPI),
109-1003F30 (30PPI), 109-1003F40 (40PPI)

Resin finger guards page: p. 597

Model no.: 109-1003G

60×60×25 mm

San Ace 60 9G type

General Specifications

- Material ..... Frame: Plastic (Flammability: UL 94V-0), Impeller: Plastic (Flammability: UL 94V-0)
- Expected life ..... See the table below. (L10 life: 90% survival rate for continuous operation in free air at 60˚C, rated voltage) Expected life at 40°C is for reference only.
- Motor protection function ..... Locked rotor burnout protection, Reverse polarity protection For details, please refer to p. 608.
- Dielectric strength ..... 50/60 Hz, 500 VAC, for 1 minute (between lead wire conductors and frame)
- Insulation resistance ..... 10 MΩ min. at 500 VDC (between lead wire conductors and frame)
- Sound pressure level (SPL) ..... A-weighted sound pressure level (SPL) at 1 m away from the air inlet.
- Storage temperature ..... -30 to +70˚C (Non-condensing)
- Lead wire ..... ⊕Red ⊖Black Sensor Yellow Control Brown
- Mass ..... 90 g

Specifications

The models listed below **have ribs and a pulse sensor with PWM control.** For models without ribs, append "1" to the end of model numbers.

Model no.	Rated voltage [V]	Operating voltage range [V]	PWM duty cycle* [%]	Rated current [A]	Rated input [W]	Rated speed [min⁻¹]	Max. airflow [m³/min]	Max. airflow [CFM]	Max. static pressure [Pa]	Max. static pressure [inchH₂O]	SPL [dB (A)]	Operating temperature [˚C]	Expected life [h]
9G0612P4S001	12	10.2 to 13.8	100	0.67	8.04	11000	1.4	49.4	300	1.2	53	-20 to +70	40000/60˚C (70000/40˚C)
			0	0.07	0.84	3300	0.42	14.8	27	0.11	19		
9G0612P4H001			100	0.5	6.0	9500	1.21	42.7	224	0.9	49		
			0	0.06	0.72	2850	0.36	12.7	20.2	0.08	18		
9G0624P4S001	24	20.4 to 27.6	100	0.34	8.16	11000	1.4	49.4	300	1.2	53		
			0	0.04	0.96	3300	0.42	14.8	27	0.11	19		
9G0624P4H001			100	0.25	6.0	9500	1.21	42.7	224	0.9	49		
			0	0.04	0.96	2850	0.36	12.7	20.2	0.08	18		
9G0648P4S001	48	36 to 72	100	0.18	8.64	11000	1.4	49.4	305	1.22	53		
			0	0.02	0.96	3300	0.42	14.8	27.4	0.11	19		

PWM frequency is 25 kHz. Models without ratings for 0% PWM duty cycle have zero speed at 0%. When control terminal is open, speed is the same as at 100% duty cycle.

Note 1: Sensor and control options are available for selection. Refer to the table on p. 637.
Note 2: The » mark indicates Short LeadTime Service applicable models. See p. 664 for details.

Airflow - Static Pressure Characteristics / PWM Duty - Speed Characteristics Example

9G0612P4S001 With pulse sensor with PWM control

PWM duty cycle

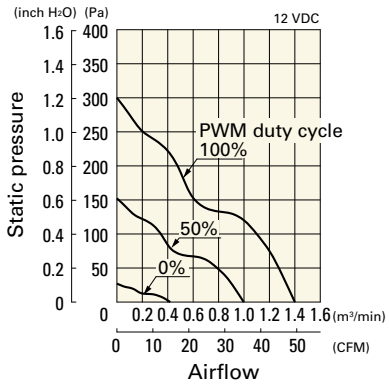

Operating voltage range

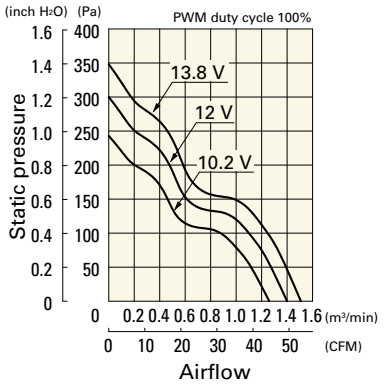

PWM duty - Speed characteristics example

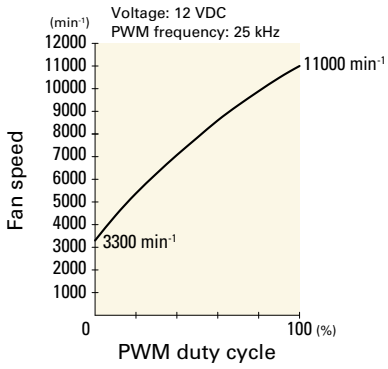

Airflow - Static Pressure Characteristics / PWM Duty - Speed Characteristics Example

9G0612P4H001 With pulse sensor with PWM control

PWM duty cycle

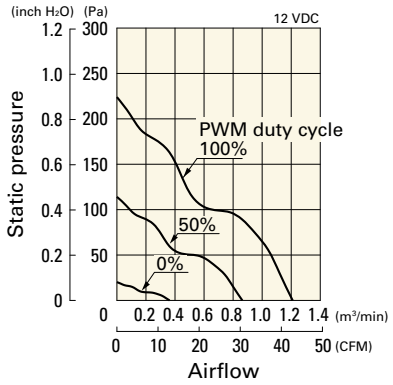

Operating voltage range

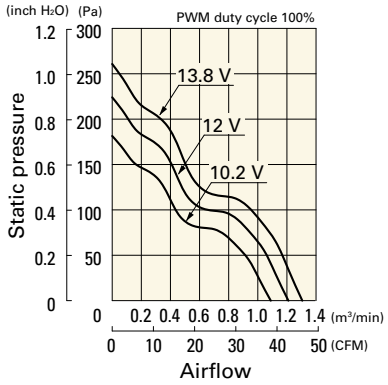

PWM duty - Speed characteristics example

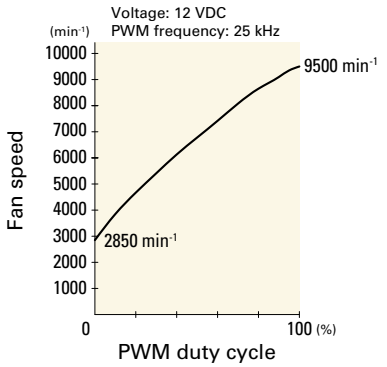

9G0624P4S001 With pulse sensor with PWM control

PWM duty cycle

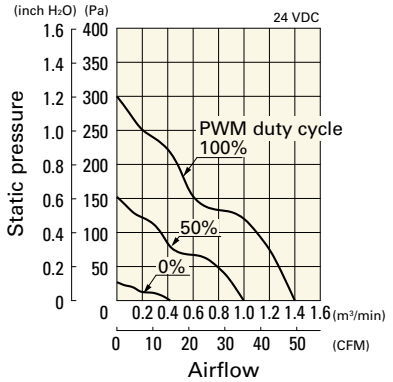

Operating voltage range

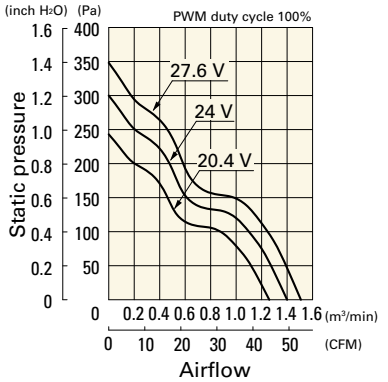

PWM duty - Speed characteristics example

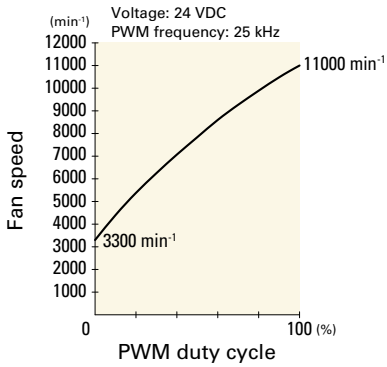

9G0624P4H001 With pulse sensor with PWM control

PWM duty cycle

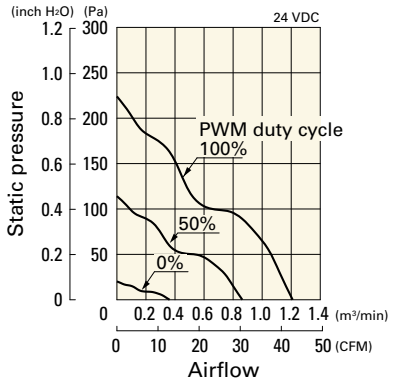

Operating voltage range

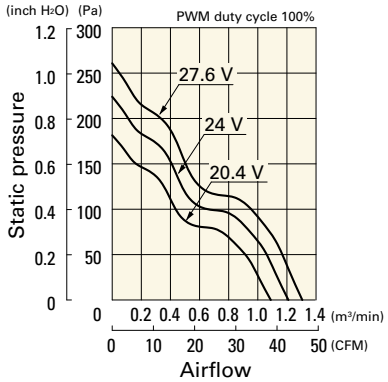

PWM duty - Speed characteristics example

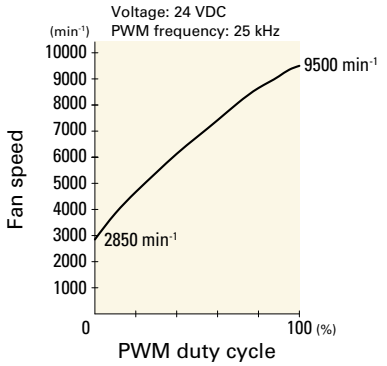

9G0648P4S001 With pulse sensor with PWM control

PWM duty cycle

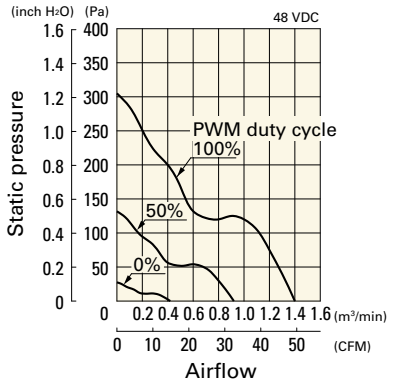

Operating voltage range

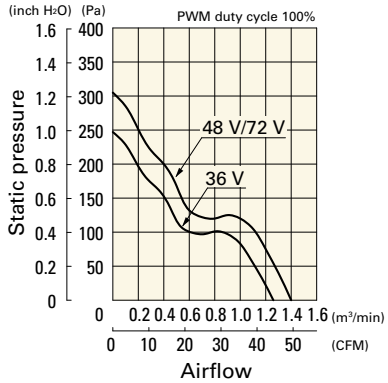

PWM duty - Speed characteristics example

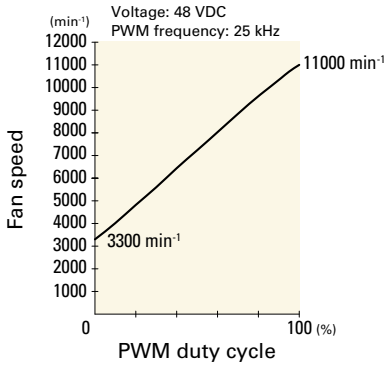

Dimensions (unit: mm) (With ribs)

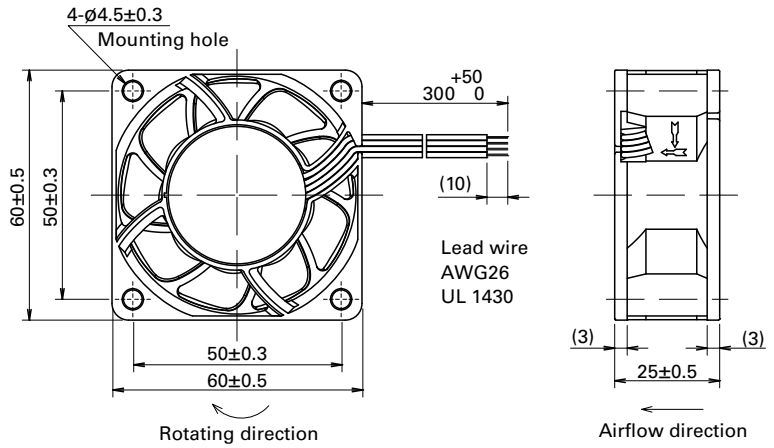

Reference Dimensions of Mounting Holes and Vent Opening (unit: mm)

Inlet side, Outlet side

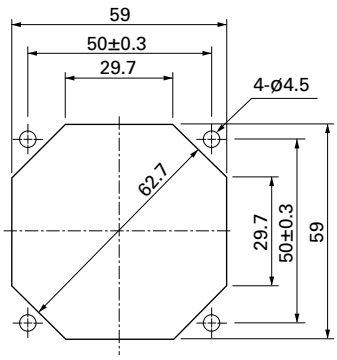

Options

Finger guards page: p. 590

Model no.: 109-139E, 109-139H

Resin finger guards page: p. 597

Model no.: 109-1003G

Resin filter kits page: p. 598

Model no.: 109-1003F13 (13PPI), 109-1003F20 (20PPI),
109-1003F30 (30PPI), 109-1003F40 (40PPI)

DC Fan

60×60×25 mm

San Ace 60 9RA type

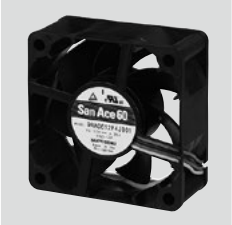

General Specifications

- Material ..... Frame: Plastic (Flammability: UL 94V-0), Impeller: Plastic (Flammability: UL 94V-1)
- Expected life ..... See the table below. (L10 life: 90% survival rate for continuous operation in free air at 60˚C, rated voltage) Expected life at 40°C is for reference only.
- Motor protection function ..... Locked rotor burnout protection, Reverse polarity protection For details, please refer to p. 608.
- Dielectric strength ..... 50/60 Hz, 500 VAC, for 1 minute (between lead wire conductors and frame)
- Insulation resistance ..... 10 MΩ min. at 500 VDC (between lead wire conductors and frame)
- Sound pressure level (SPL) ..... A-weighted sound pressure level (SPL) at 1 m away from the air inlet.
- Storage temperature ..... -30 to +70˚C (Non-condensing)
- Lead wire ..... ⊕Red ⊖Black Sensor Yellow Control Brown (For models without PWM control, there is no speed control wiring.)
- Mass ..... 70 g

Specifications

The models listed below **have ribs and a pulse sensor with PWM control.** For models without ribs, append "1" to the end of model numbers.

Model no.	Rated voltage [V]	Operating voltage range [V]	PWM duty cycle* [%]	Rated current [A]	Rated input [W]	Rated speed [min⁻¹]	Max. airflow [m³/min]	Max. airflow [CFM]	Max. static pressure [Pa]	Max. static pressure [inchH₂O]	SPL [dB (A)]	Operating temperature [˚C]	Expected life [h]
9RA0612P4J001	12	10.8 to 13.2	100	0.35	4.2	7700	1.1	38.8	130	0.52	41	-20 to +70	60000/60˚C (90000/40˚C)
			30	0.05	0.6	1900	0.27	9.5	8.1	0.03	13		
9RA0624P4J001	24	21.6 to 26.4	100	0.18	4.32	7700	1.1	38.8	130	0.52	41		
			20	0.03	0.72	1700	0.24	8.5	6.5	0.02	11		
9RA0648P4J001	48	43.2 to 52.8	100	0.1	4.8	7700	1.1	38.8	130	0.52	41		
			20	0.03	1.44	1800	0.25	8.8	7.1	0.03	12		

PWM frequency is 25 kHz. Models without ratings for 0% PWM duty cycle have zero speed at 0%. When control terminal is open, speed is the same as at 100% duty cycle.

The models listed below **have ribs and a pulse sensor.** For models without ribs, append "1" to the end of model numbers.

Model no.	Rated voltage [V]	Operating voltage range [V]	Rated current [A]	Rated input [W]	Rated speed [min⁻¹]	Max. airflow [m³/min]	Max. airflow [CFM]	Max. static pressure [Pa]	Max. static pressure [inchH₂O]	SPL [dB (A)]	Operating temperature [˚C]	Expected life [h]
9RA0612J4001	12	7 to 13.8	0.35	4.2	7700	1.1	38.8	130	0.52	41	-20 to +70	60000/60˚C (90000/40˚C)
9RA0612G4001			0.15	1.8	5600	0.8	28.2	69	0.28	36		
9RA0612S4001			0.1	1.2	4600	0.66	23.3	46	0.18	30		
9RA0612H4001			0.07	0.84	3800	0.54	19.1	32	0.13	26		
9RA0612F4001		6 to 13.8	0.05	0.6	3200	0.46	16.2	22	0.09	21		
9RA0612M4001			0.04	0.48	2600	0.37	13	14.8	0.06	17		
9RA0624J4001	24	14 to 27.6	0.18	4.32	7700	1.1	38.8	130	0.52	41		
9RA0624G4001			0.08	1.92	5600	0.8	28.2	69	0.28	36		
9RA0624S4001			0.06	1.44	4600	0.66	23.3	46	0.18	30		
9RA0624H4001			0.05	1.2	3800	0.54	19.1	32	0.13	26		
9RA0624F4001		12 to 27.6	0.04	0.96	3200	0.46	16.2	22	0.09	21		
9RA0624M4001		14 to 27.6	0.03	0.72	2600	0.37	13	14.8	0.06	17		
9RA0648J4001	48	36 to 55.2	0.1	4.8	7700	1.1	38.8	130	0.52	41		
9RA0648G4001			0.06	2.88	5600	0.8	28.2	69	0.28	36		

Note 1: Sensor and control options are available for selection. Refer to the table on pp. 644 to 645.
Note 2: The » mark indicates Short LeadTime Service applicable models. See p. 664 for details.

Airflow - Static Pressure Characteristics / PWM Duty - Speed Characteristics Example

9RA0612P4J001 With pulse sensor with PWM control

PWM duty cycle

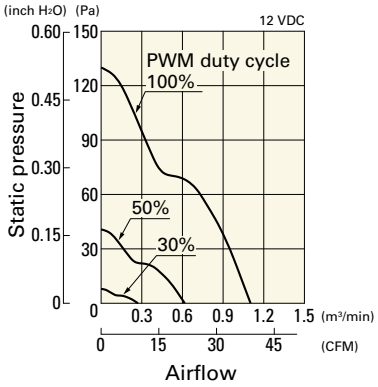

Operating voltage range

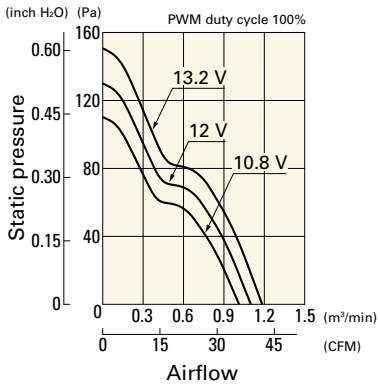

PWM duty - Speed characteristics example

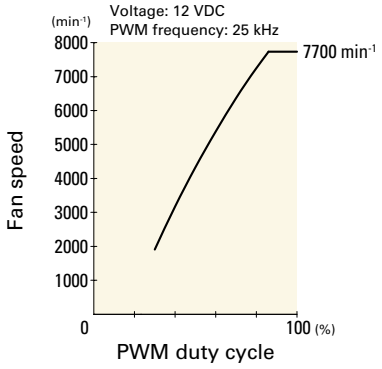

9RA0624P4J001 With pulse sensor with PWM control

PWM duty cycle

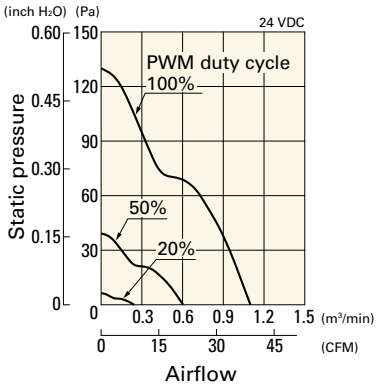

Operating voltage range

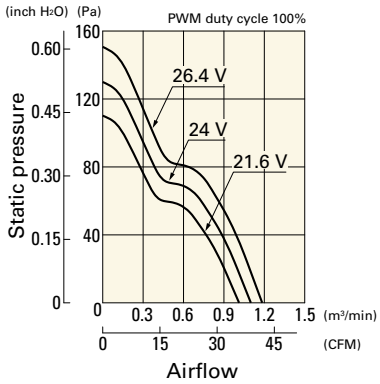

PWM duty - Speed characteristics example

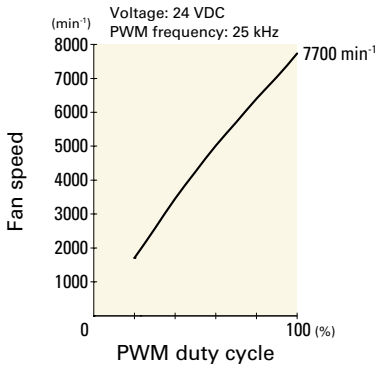

9RA0648P4J001 With pulse sensor with PWM control

PWM duty cycle

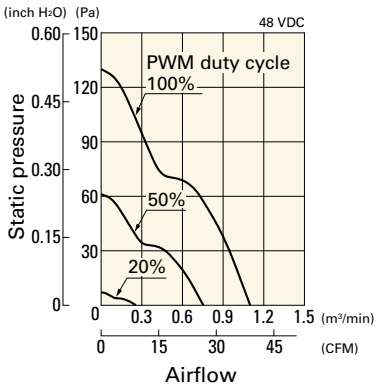

Operating voltage range

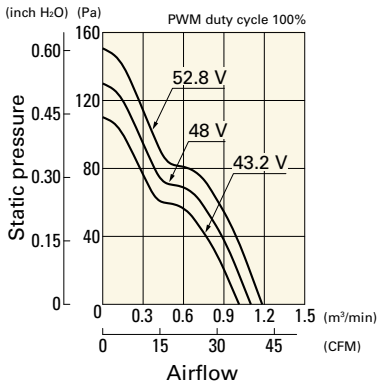

PWM duty - Speed characteristics example

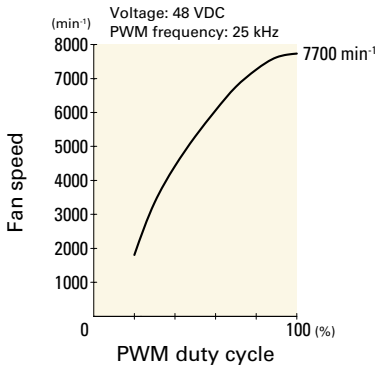

Airflow - Static Pressure Characteristics

9RA0612J4001 With pulse sensor

Operating voltage range

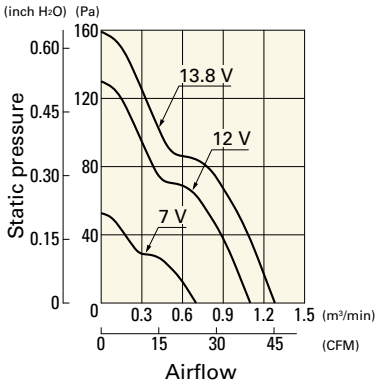

9RA0612G4001 With pulse sensor

Operating voltage range

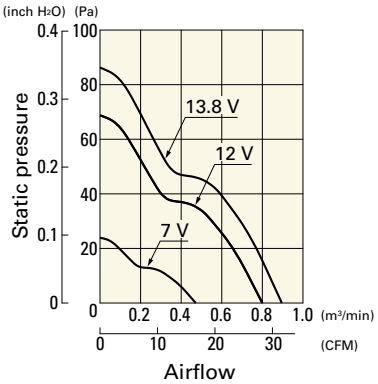

9RA0612S4001 With pulse sensor

Operating voltage range

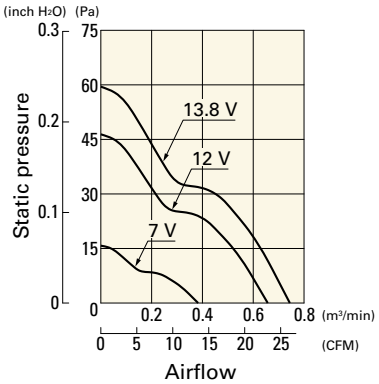

9RA0612H4001 With pulse sensor

Operating voltage range

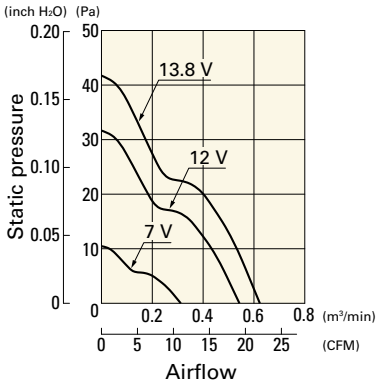

9RA0612F4001 With pulse sensor

Operating voltage range

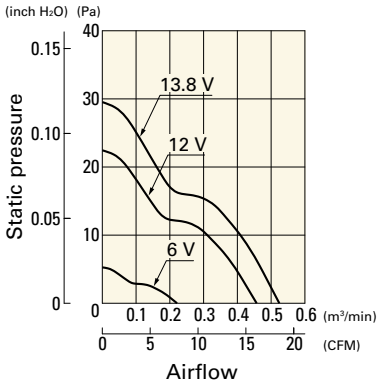

9RA0612M4001 With pulse sensor

Operating voltage range

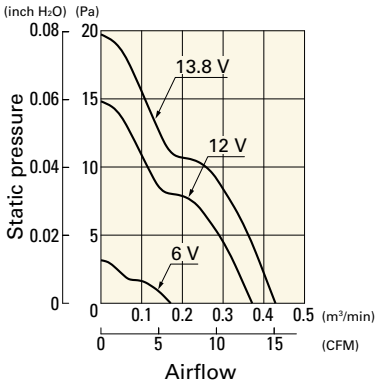

9RA0624J4001 With pulse sensor

Operating voltage range

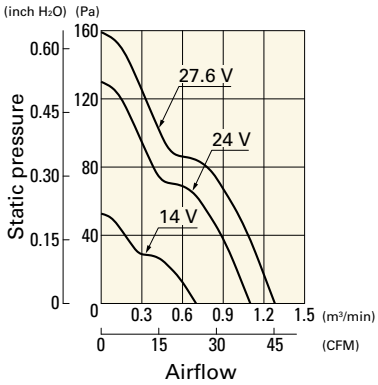

9RA0624G4001 With pulse sensor

Operating voltage range

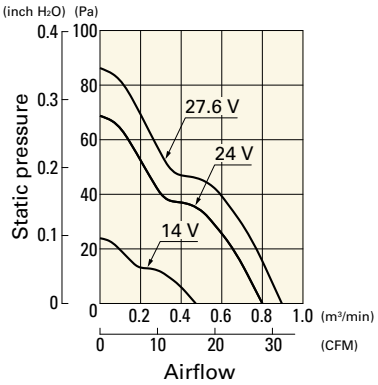

9RA0624S4001 With pulse sensor

Operating voltage range

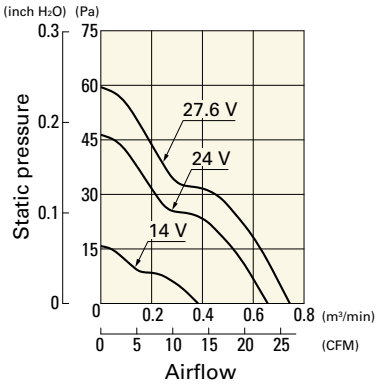

9RA0624H4001 With pulse sensor

Operating voltage range

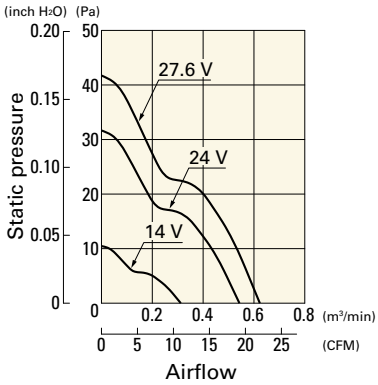

9RA0624F4001 With pulse sensor

Operating voltage range

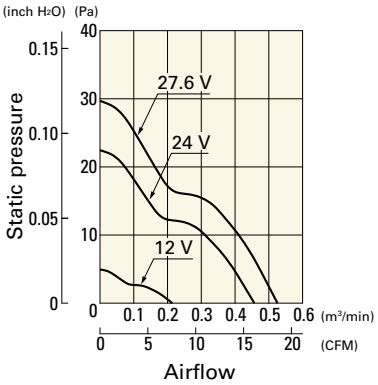

9RA0624M4001 With pulse sensor

Operating voltage range

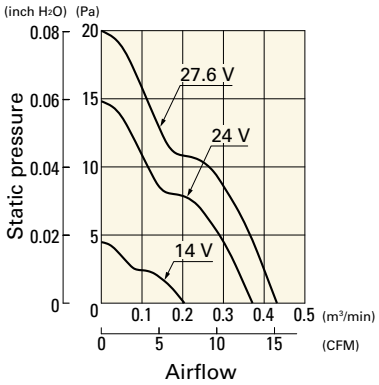

Airflow - Static Pressure Characteristics

9RA0648J4001 With pulse sensor

Operating voltage range

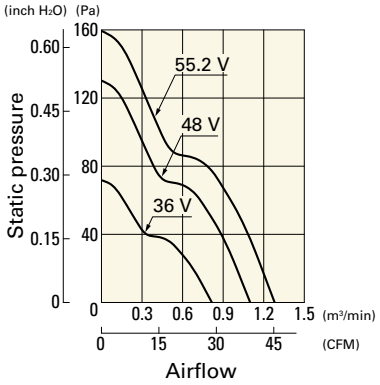

9RA0648G4001 With pulse sensor

Operating voltage range

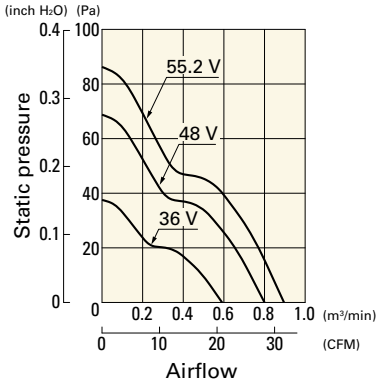

Dimensions (unit: mm) (Ribbed frame with pulse sensor with PWM control)

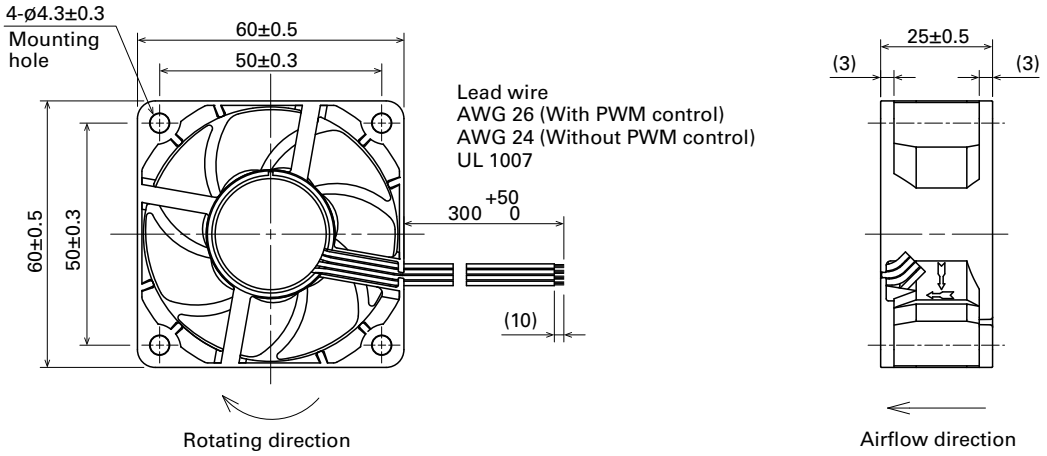

Reference Dimensions of Mounting Holes and Vent Opening (unit: mm)

Inlet side, Outlet side

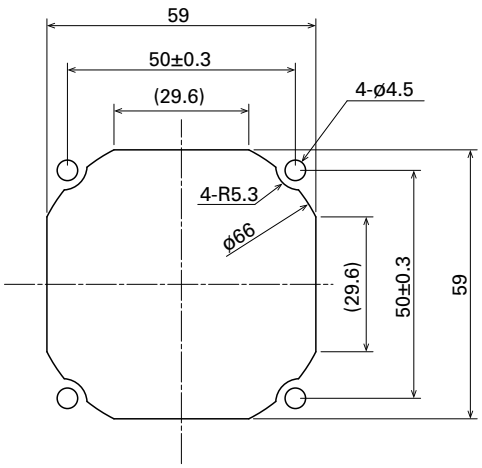

Options

Finger guards page: p. 590

Model no.: 109-139E, 109-139H

Resin finger guards page: p. 597

Model no.: 109-1003G

Resin filter kits page: p. 598

Model no.: 109-1003F13 (13PPI), 109-1003F20 (20PPI),
109-1003F30 (30PPI), 109-1003F40 (40PPI)

DC Fan

60×60×25 mm

San Ace 60 9S type Silent Fan

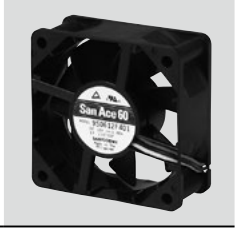

General Specifications

- Material ..... Frame: Plastic (Flammability: UL 94V-0), Impeller: Plastic (Flammability: UL 94V-1)
- Expected life ..... See the table below. (L10 life: 90% survival rate for continuous operation in free air at 60˚C, rated voltage) Expected life at 40°C is for reference only.
- Motor protection function ..... Locked rotor burnout protection, Reverse polarity protection For details, please refer to p. 608.
- Dielectric strength ..... 50/60 Hz, 500 VAC, for 1 minute (between lead wire conductors and frame)
- Insulation resistance ..... 10 MΩ min. at 500 VDC (between lead wire conductors and frame)
- Sound pressure level (SPL) ..... A-weighted sound pressure level (SPL) at 1 m away from the air inlet.
- Storage temperature ..... -30 to +70˚C (Non-condensing)
- Lead wire ..... ⊕Red ⊖Black Sensor Yellow
- Mass ..... 55 g

Specifications

The models listed below **have ribs and a pulse sensor.** For models without ribs, append "1" to the end of model numbers.

Model no.	Rated voltage [V]	Operating voltage range [V]	Rated current [A]	Rated input [W]	Rated speed [min⁻¹]	Max. airflow [m³/min]	Max. airflow [CFM]	Max. static pressure [Pa]	Max. static pressure [inchH₂O]	SPL [dB (A)]	Operating temperature [˚C]	Expected life [h]
9S0612S401	12	8 to 13.8	0.2	2.4	5000	0.74	26.1	65.7	0.26	31	-10 to +70	40000/60˚C (70000/40˚C)
9S0612H401			0.11	1.32	3900	0.58	20.5	40.0	0.16	24		
9S0612F401			0.08	0.96	3300	0.49	17.3	29.3	0.12	20		
9S0612M401			0.07	0.84	2700	0.4	14.1	19.7	0.08	16		

Note 1: Sensor and control options are available for selection. Refer to the table on p. 649.
Note 2: The » mark indicates Short Lead Time Service applicable models. See p. 664 for details.

Airflow - Static Pressure Characteristics

9S0612S401 With pulse sensor

Operating voltage range

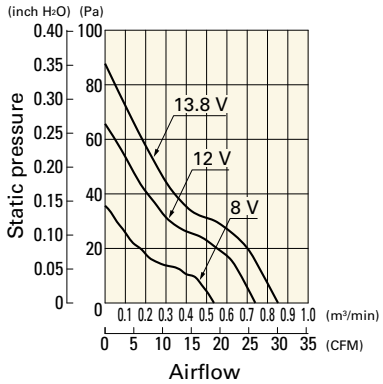

9S0612H401 With pulse sensor

Operating voltage range

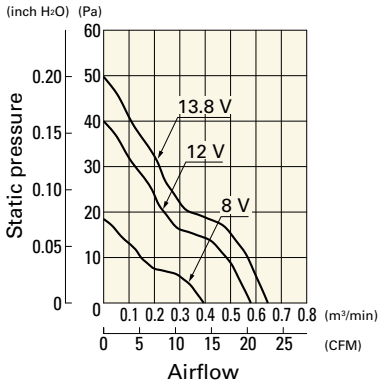

9S0612F401 With pulse sensor

Operating voltage range

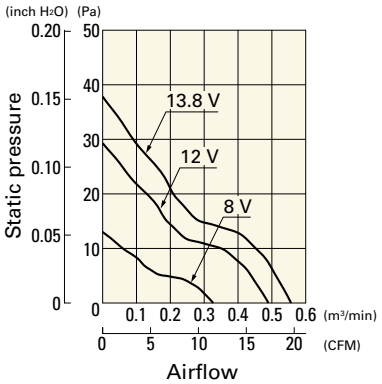

Airflow - Static Pressure Characteristics

9S0612M401 With pulse sensor

Operating voltage range

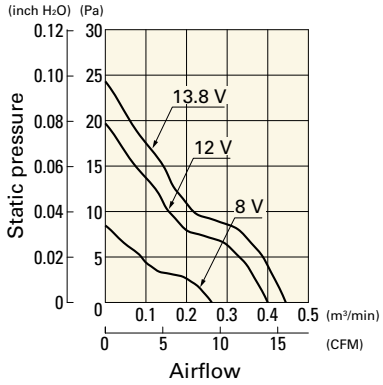

Dimensions (unit: mm) (With ribs)

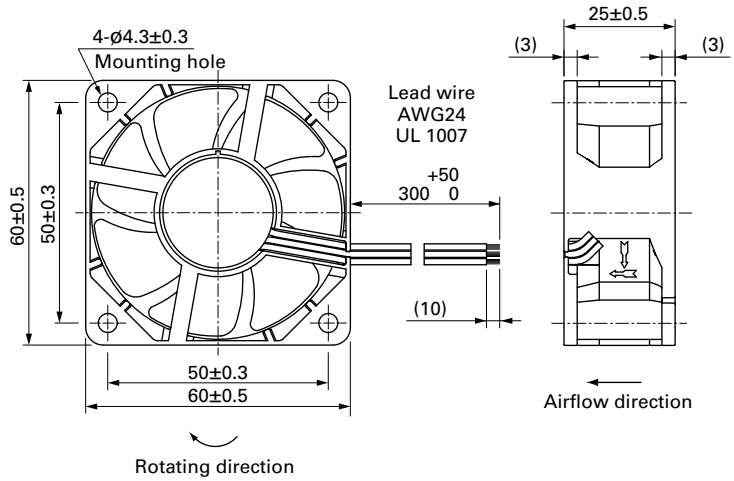

Reference Dimensions of Mounting Holes and Vent Opening (unit: mm)

Inlet side, Outlet side

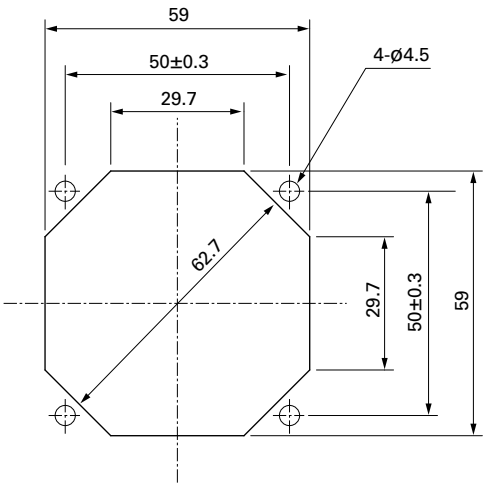

Options

Finger guards page: p. 590

Model no.: 109-139E, 109-139H

Resin finger guards page: p. 597

Model no.: 109-1003G

Resin filter kits page: p. 598

Model no.: 109-1003F13 (13PPI), 109-1003F20 (20PPI),
109-1003F30 (30PPI), 109-1003F40 (40PPI)

DC Fan

60×60×38 mm

San Ace 60 9HVA type

General Specifications

- Material ..... Frame: Plastic (Flammability: UL 94V-0), Impeller: Plastic (Flammability: UL 94V-1)
- Expected life ..... See the table below. (L10 life: 90% survival rate for continuous operation in free air at 60˚C, rated voltage) Expected life at 40°C is for reference only.
- Motor protection function ..... Locked rotor burnout protection, Reverse polarity protection For details, please refer to p. 608.
- Dielectric strength ..... 50/60 Hz, 500 VAC, for 1 minute (between lead wire conductors and frame)
- Insulation resistance ..... 10 MΩ min. at 500 VDC (between lead wire conductors and frame)
- Sound pressure level (SPL) ..... A-weighted sound pressure level (SPL) at 1 m away from the air inlet.
- Storage temperature ..... -30 to +70˚C (Non-condensing)
- Lead wire ..... ⊕Red ⊖Black Sensor Yellow Control Brown
- Mass ..... 130 g

Specifications

The models listed below **have ribs and a pulse sensor with PWM control.** For models without ribs, append "1" to the end of model numbers.

Model no.	Rated voltage [V]	Operating voltage range [V]	PWM duty cycle* [%]	Rated current [A]	Rated input [W]	Rated speed [min⁻¹]	Max. airflow [m³/min]	Max. airflow [CFM]	Max. static pressure [Pa]	Max. static pressure [inchH₂O]	SPL [dB (A)]	Operating temperature [˚C]	Expected life [h]
9HVA0612P1J001	12	10.8 to 13.2	100	2.8	33.6	24800	2.39	84.3	2000	8.0	68	-20 to +70	40000/60˚C (70000/40˚C)
			20	0.11	1.32	5200	0.48	16.9	91	0.36	34		

PWM frequency is 25 kHz. Models without ratings for 0% PWM duty cycle have zero speed at 0%. When control terminal is open, speed is the same as at 100% duty cycle.

Note: The » mark indicates Short Lead Time Service applicable models. See p. 664 for details.

Airflow - Static Pressure Characteristics / PWM Duty - Speed Characteristics Example

9HVA0612P1J001 With pulse sensor with PWM control

PWM duty cycle

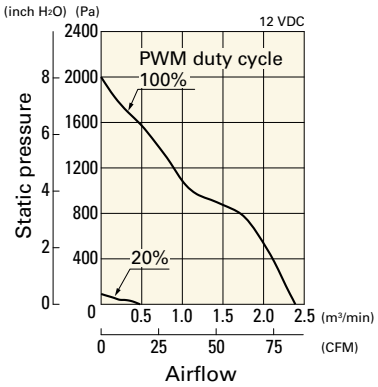

Operating voltage range

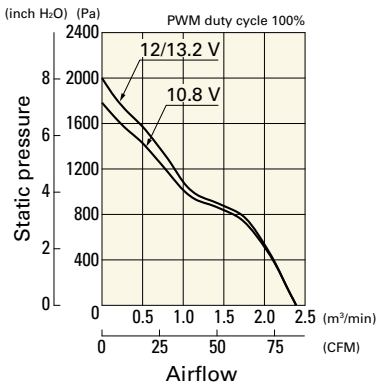

PWM duty - Speed characteristics example

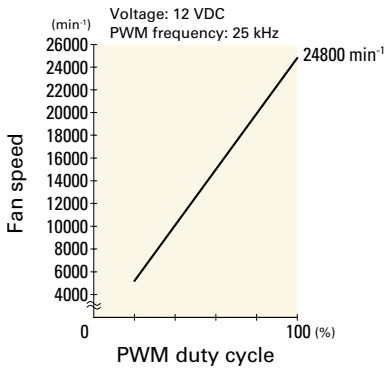

Dimensions (unit: mm) (With ribs)

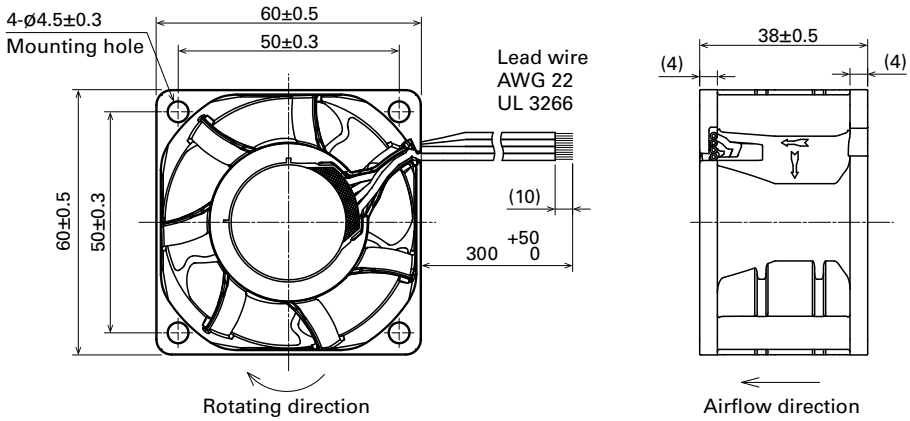

Reference Dimensions of Mounting Holes and Vent Opening (unit: mm)

Inlet side, Outlet side

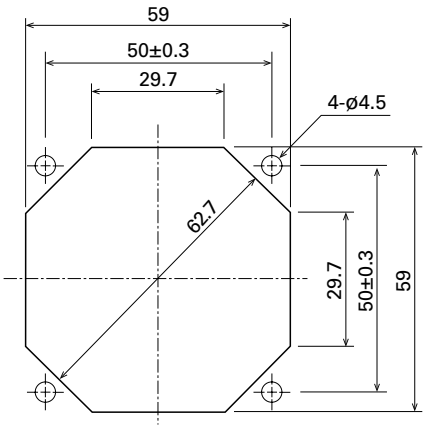

Options

Finger guards page: p. 590

Model no.: 109-139E, 109-139H

Resin filter kits page: p. 598

Model no.: 109-1003F13 (13PPI), 109-1003F20 (20PPI),
109-1003F30 (30PPI), 109-1003F40 (40PPI)

Resin finger guards page: p. 597

Model no.: 109-1003G

DC Fan

60×60×38 mm

San Ace 60 9HV type

General Specifications

- Material ..... Frame: Plastic (Flammability: UL 94V-0), Impeller: Plastic (Flammability: UL 94V-0)
- Expected life ..... See the table below. (L10 life: 90% survival rate for continuous operation in free air at 60˚C, rated voltage) Expected life at 40°C is for reference only.
- Motor protection function ..... Locked rotor burnout protection, Reverse polarity protection For details, please refer to p. 608.
- Dielectric strength ..... 50/60 Hz, 500 VAC, for 1 minute (between lead wire conductors and frame)
- Insulation resistance ..... 10 MΩ min. at 500 VDC (between lead wire conductors and frame)
- Sound pressure level (SPL) ..... A-weighted sound pressure level (SPL) at 1 m away from the air inlet.
- Storage temperature ..... -30 to +70˚C (Non-condensing)
- Lead wire ..... ⊕Red ⊖Black Sensor Yellow Control Brown
- Mass ..... 135 g

Specifications

The models listed below **have ribs and a pulse sensor with PWM control.** For models without ribs, append "1" to the end of model numbers.

Model no.	Rated voltage [V]	Operating voltage range [V]	PWM duty cycle* [%]	Rated current [A]	Rated input [W]	Rated speed [min⁻¹]	Max. airflow [m³/min]	Max. airflow [CFM]	Max. static pressure [Pa]	Max. static pressure [inchH₂O]	SPL [dB (A)]	Operating temperature [˚C]	Expected life [h]
9HV0612P1J001	12	10.8 to 12.6	100	2.7	32.4	21700	1.88	66.4	1750	7.0	68	-20 to +70	40000/60˚C (70000/40˚C)
			20	0.17	2.04	5300	0.43	15.2	102	0.41	34		

PWM frequency is 25 kHz. Models without ratings for 0% PWM duty cycle have zero speed at 0%. When control terminal is open, speed is the same as at 100% duty cycle.

Note: The mark indicates Short Lead Time Service applicable models. See p. 664 for details.

Airflow - Static Pressure Characteristics / PWM Duty - Speed Characteristics Example

9HV0612P1J001 With pulse sensor with PWM control

PWM duty cycle

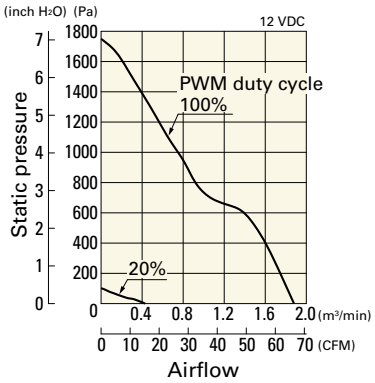

Operating voltage range

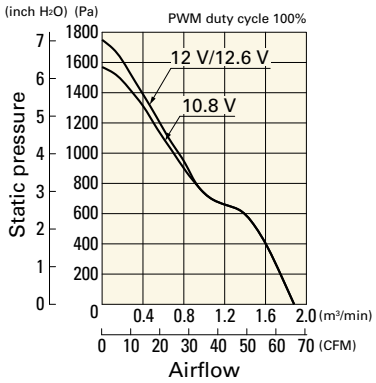

PWM duty - Speed characteristics example

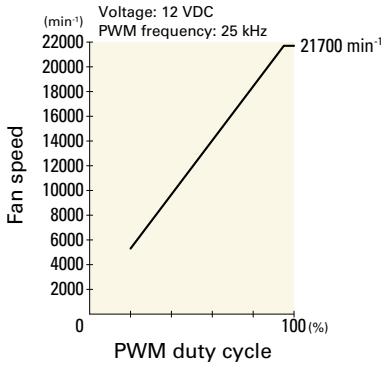

Dimensions (unit: mm) (With ribs)

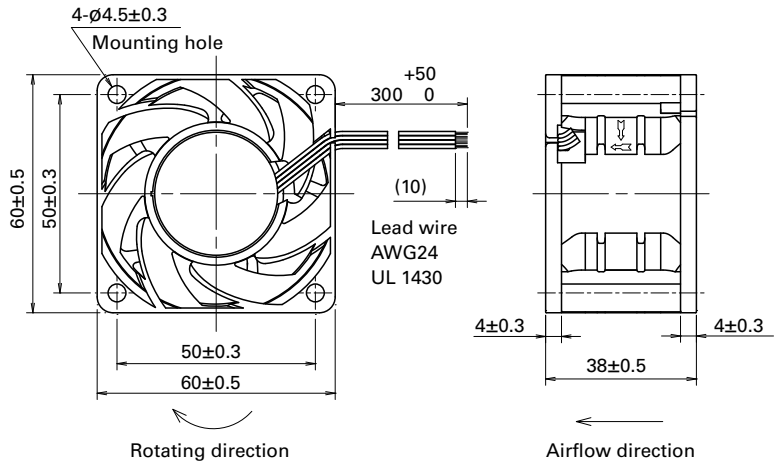

Reference Dimensions of Mounting Holes and Vent Opening (unit: mm)

Inlet side, Outlet side

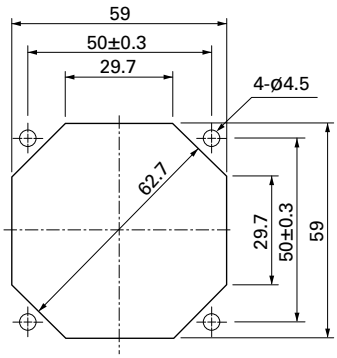

Options

Finger guards page: p. 590

Model no.: 109-139E, 109-139H

Resin filter kits page: p. 598

Model no.: 109-1003F13 (13PPI), 109-1003F20 (20PPI),
109-1003F30 (30PPI), 109-1003F40 (40PPI)

Resin finger guards page: p. 597

Model no.: 109-1003G

DC Fan

60×60×38 mm

San Ace 60 9GA type Low Power Consumption Fan

General Specifications

- Material ..... Frame: Plastic (Flammability: UL 94V-0), Impeller: Plastic (Flammability: UL 94V-0)
- Expected life ..... See the table below. (L10 life: 90% survival rate for continuous operation in free air at 60˚C, rated voltage) Expected life at 40°C is for reference only.
- Motor protection function ..... Locked rotor burnout protection, Reverse polarity protection For details, please refer to p. 608.
- Dielectric strength ..... 50/60 Hz, 500 VAC, for 1 minute (between lead wire conductors and frame)
- Insulation resistance ..... 10 MΩ min. at 500 VDC (between lead wire conductors and frame)
- Sound pressure level (SPL) ..... A-weighted sound pressure level (SPL) at 1 m away from the air inlet.
- Storage temperature ..... -30 to +70˚C (Non-condensing)
- Lead wire ..... ⊕Red ⊖Black Sensor Yellow Control Brown
- Mass ..... 130 g

Specifications

The models listed below **have ribs and a pulse sensor with PWM control.** For models without ribs, append "1" to the end of model numbers.

Model no.	Rated voltage [V]	Operating voltage range [V]	PWM duty cycle* [%]	Rated current [A]	Rated input [W]	Rated speed [min⁻¹]	Max. airflow [m³/min]	Max. airflow [CFM]	Max. static pressure [Pa]	Max. static pressure [inchH₂O]	SPL [dB (A)]	Operating temperature [˚C]	Expected life [h]
9GA0612P1J03	12	10.8 to 12.6	100	1.5	18.0	17500	1.75	62	820	3.3	63	-20 to +60	40000/60˚C (70000/40˚C)
			20	0.1	1.2	4000	0.4	14	43	0.17	24		
9GA0612P1K03		10.8 to 13.2	100	0.95	11.4	14800	1.5	53	600	2.4	59	-20 to +70	
			20	0.1	1.2	4000	0.4	14	43	0.17	24		
9GA0612P1K60			100	0.95	11.4	14800	1.5	53	675	2.7	59	-20 to +60	
			0	0.05	0.6	1480	0.134	4.7	8.3	0.03	16		
9GA0612P1H03			100	0.55	6.6	11500	1.15	40	375	1.5	52	-20 to +70	
			20	0.06	0.72	2600	0.27	9.5	20	0.08	19		
9GA0624P1J03	24	21.6 to 25.2	100	0.75	18.0	17500	1.75	62	820	3.3	63	-20 to +60	
			20	0.1	2.4	6200	0.63	22	104	0.42	35		
9GA0624P1K03		21.6 to 26.4	100	0.5	12	14800	1.5	53.0	600	2.4	59	-20 to +70	
			20	0.06	1.44	5000	0.5	17.7	70	0.28	28		
9GA0648P1K03	48	43.2 to 52.8	100	0.24	11.52	14800	1.5	53	600	2.4	59	-10 to +70	
			20	0.03	1.44	4000	0.4	14	43	0.17	24		

PWM frequency is 25 kHz. Models without ratings for 0% PWM duty cycle have zero speed at 0%. When control terminal is open, speed is the same as at 100% duty cycle.

Note 1: Sensor and control options are available for selection. Refer to the table on pp. 638 to 639.
Note 2: The » mark indicates Short LeadTime Service applicable models. See p. 664 for details.

Airflow - Static Pressure Characteristics / PWM Duty - Speed Characteristics Example

9GA0612P1J03 With pulse sensor with PWM control

PWM duty cycle

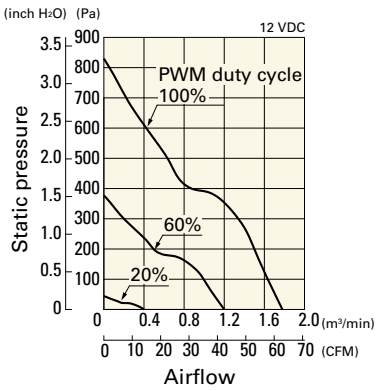

Operating voltage range

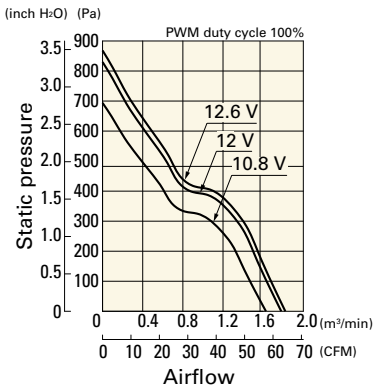

PWM duty - Speed characteristics example

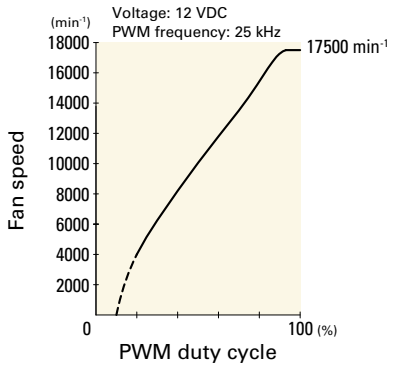

Airflow - Static Pressure Characteristics / PWM Duty - Speed Characteristics Example

9GA0612P1K03 With pulse sensor with PWM control

PWM duty cycle

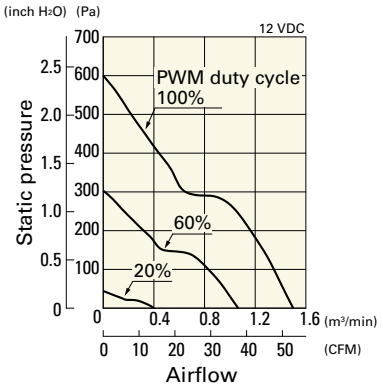

Operating voltage range

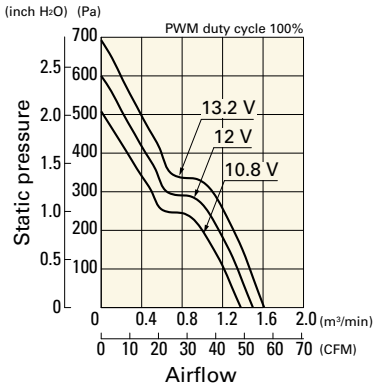

PWM duty - Speed characteristics example

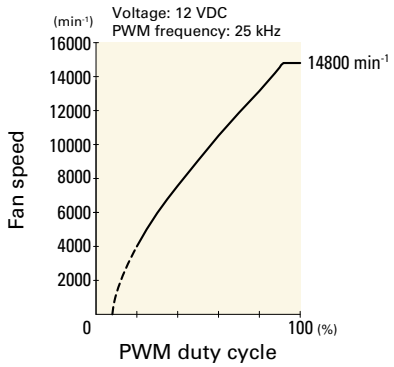

9GA0612P1K60 With pulse sensor with PWM control

PWM duty cycle

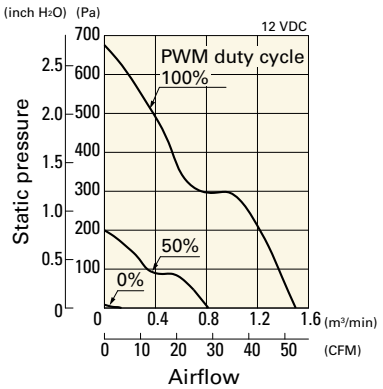

Operating voltage range

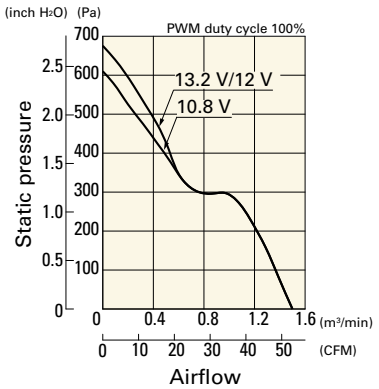

PWM duty - Speed characteristics example

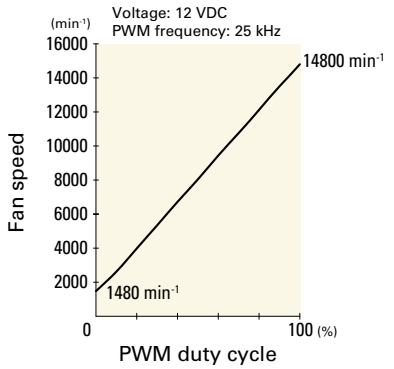

9GA0612P1H03 With pulse sensor with PWM control

PWM duty cycle

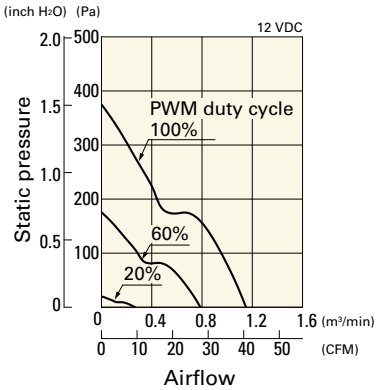

Operating voltage range

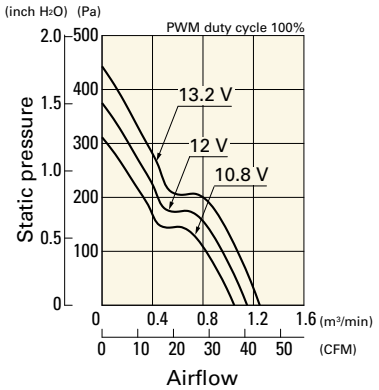

PWM duty - Speed characteristics example

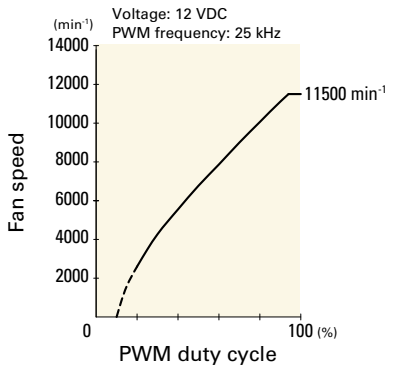

9GA0624P1J03 With pulse sensor with PWM control

PWM duty cycle

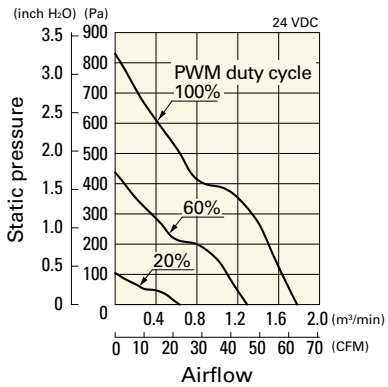

Operating voltage range

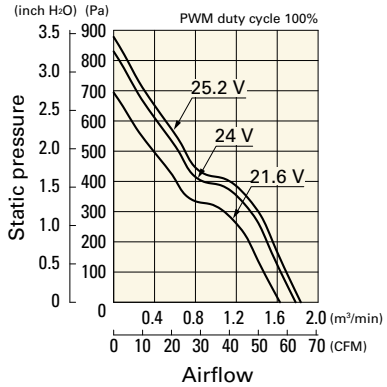

PWM duty - Speed characteristics example

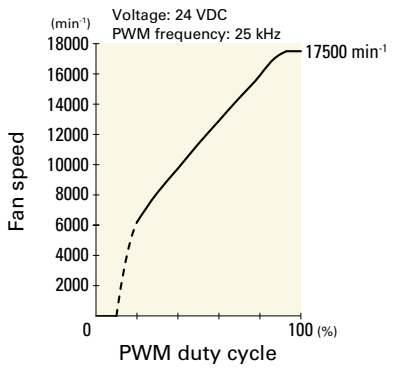

Airflow - Static Pressure Characteristics / PWM Duty - Speed Characteristics Example

9GA0624P1K03 With pulse sensor with PWM control

PWM duty cycle

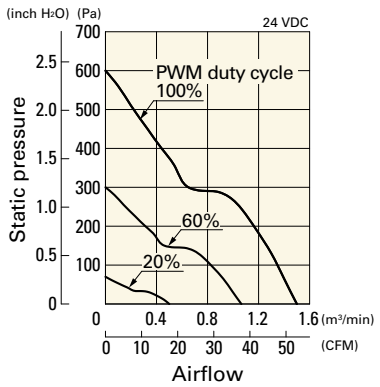

Operating voltage range

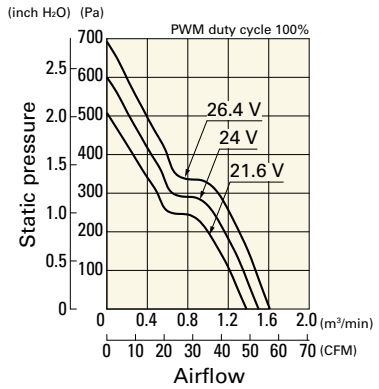

PWM duty - Speed characteristics example

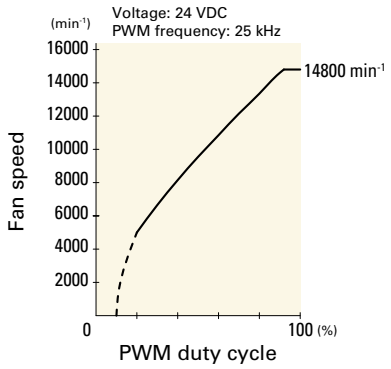

9GA0648P1K03 With pulse sensor with PWM control

PWM duty cycle

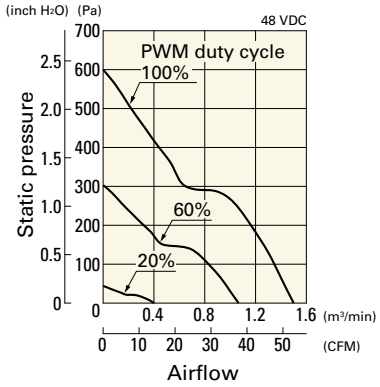

Operating voltage range

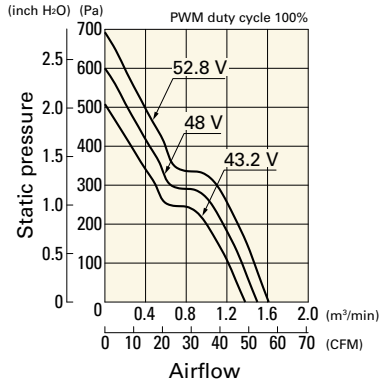

PWM duty - Speed characteristics example

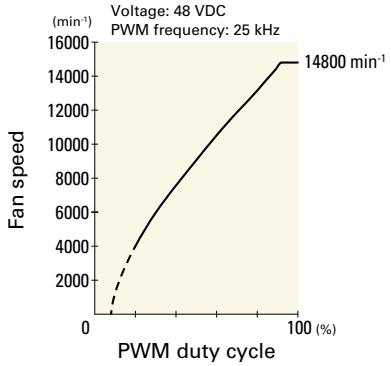

Dimensions (unit: mm) (With ribs)

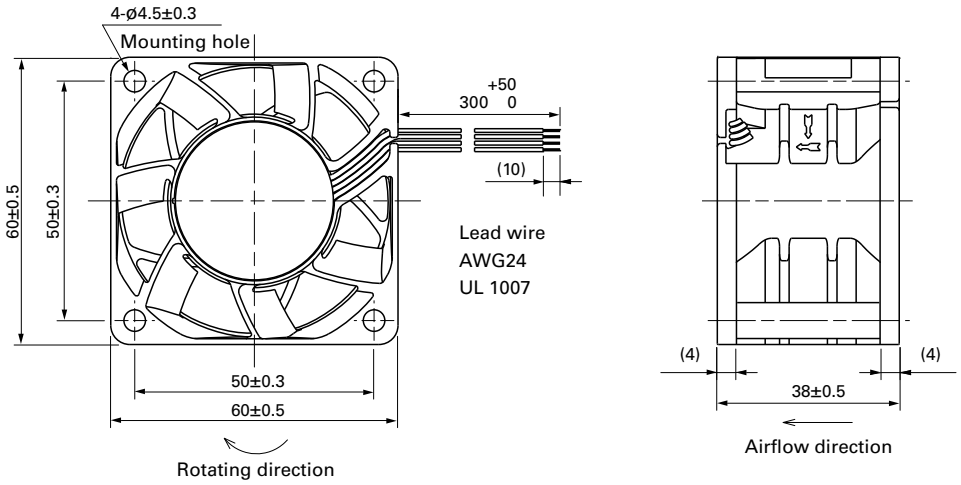

Reference Dimensions of Mounting Holes and Vent Opening (unit: mm)

Inlet side, Outlet side

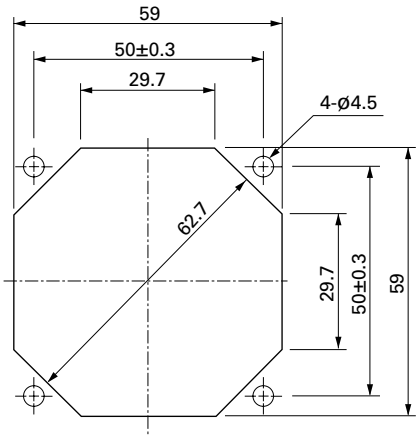

Options

Finger guards page: p. 590

Model no.: 109-139E, 109-139H

Resin filter kits page: p. 598

Model no.: 109-1003F13 (13PPI), 109-1003F20 (20PPI),
109-1003F30 (30PPI), 109-1003F40 (40PPI)

Resin finger guards page: p. 597

Model no.: 109-1003G

DC Fan

60×60×38 mm

San Ace 60 9GV type

General Specifications

- Material ..... Frame: Plastic (Flammability: UL 94V-0), Impeller: Plastic (Flammability: UL 94V-1)
- Expected life ..... See the table below. (L10 life: 90% survival rate for continuous operation in free air at 60˚C, rated voltage) Expected life at 40°C is for reference only.
- Motor protection function ..... Locked rotor burnout protection, Reverse polarity protection For details, please refer to p. 608.
- Dielectric strength ..... 50/60 Hz, 500 VAC, for 1 minute (between lead wire conductors and frame)
- Insulation resistance ..... 10 MΩ min. at 500 VDC (between lead wire conductors and frame)
- Sound pressure level (SPL) ..... A-weighted sound pressure level (SPL) at 1 m away from the air inlet.
- Storage temperature ..... -30 to +70˚C (Non-condensing)
- Lead wire ..... ⊕Red ⊖Black Sensor Yellow Control Brown
- Mass ..... 130 g

Specifications

The models listed below **have ribs and a pulse sensor with PWM control.** For models without ribs, append "1" to the end of model numbers.

Model no.	Rated voltage [V]	Operating voltage range [V]	PWM duty cycle* [%]	Rated current [A]	Rated input [W]	Rated speed [min⁻¹]	Max. airflow [m³/min]	Max. airflow [CFM]	Max. static pressure [Pa]	Max. static pressure [inchH₂O]	SPL [dB (A)]	Operating temperature [˚C]	Expected life [h]
9GV0612P1G03	12	8.0 to 13.8	100	2.8	33.6	16000	2.37	84	751	3.02	66	-20 to +70	40000/60˚C (70000/40˚C)
			0	0.12	1.5	3100	0.44	15	26	0.10	25		
9GV0624P1G03	24	20.4 to 27.6	100	1.4	33.6	16000	2.37	84	751	3.02	66		
			0	0.12	2.88	6000	0.89	31	105	0.42	38		

PWM frequency is 25 kHz. Models without ratings for 0% PWM duty cycle have zero speed at 0%. When control terminal is open, speed is the same as at 100% duty cycle.

Note: Sensor and control options are available for selection. Refer to the table on p. 641.

Airflow - Static Pressure Characteristics / PWM Duty - Speed Characteristics Example

9GV0612P1G03 With pulse sensor with PWM control

PWM duty cycle

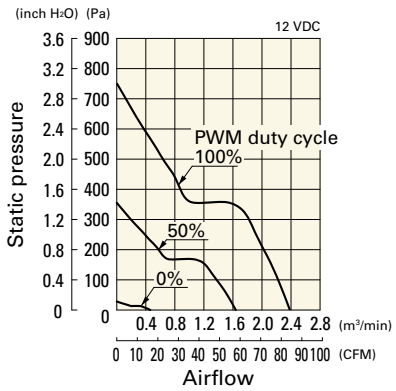

Operating voltage range

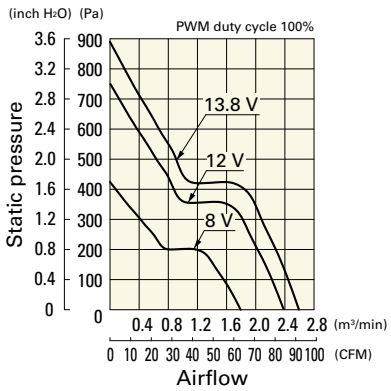

PWM duty - Speed characteristics example

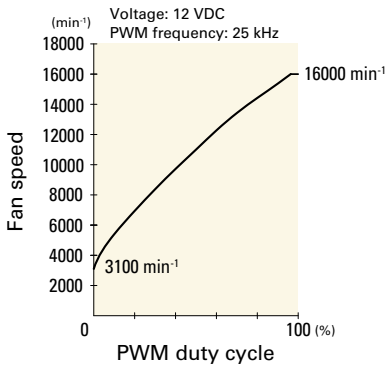

Airflow - Static Pressure Characteristics / PWM Duty - Speed Characteristics Example

9GV0624P1G03 With pulse sensor with PWM control

PWM duty cycle

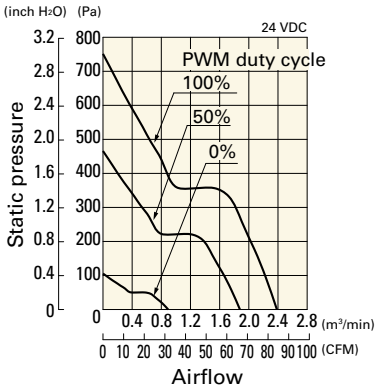

Operating voltage range

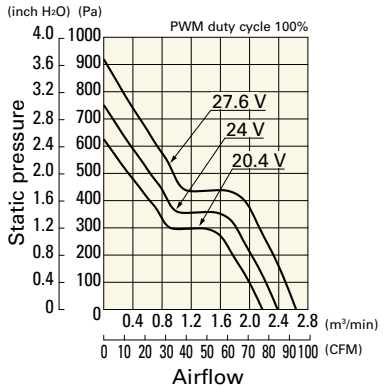

PWM duty - Speed characteristics example

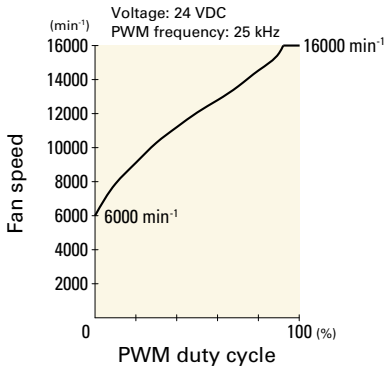

Dimensions (unit: mm) (With ribs)

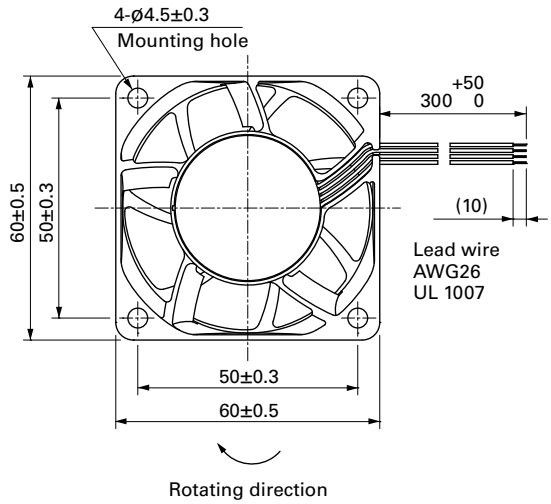

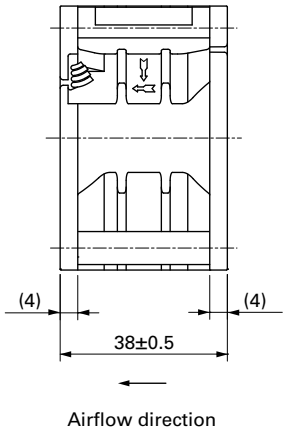

Reference Dimensions of Mounting Holes and Vent Opening (unit: mm)

Inlet side, Outlet side

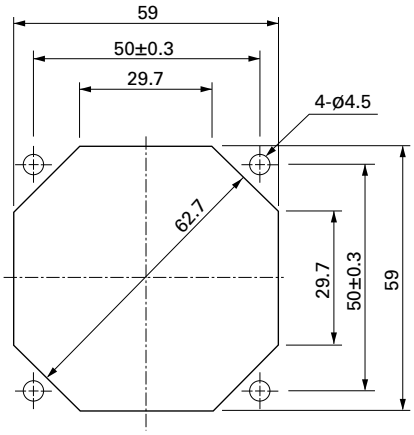

Options

Finger guards page: p. 590

Model no.: 109-139E, 109-139H

Resin finger guards page: p. 597

Model no.: 109-1003G

Resin filter kits page: p. 598

Model no.: 109-1003F13 (13PPI), 109-1003F20 (20PPI),
109-1003F30 (30PPI), 109-1003F40 (40PPI)

DC Fan

70×70×38 mm

San Ace 70 9GA type Low Power Consumption Fan

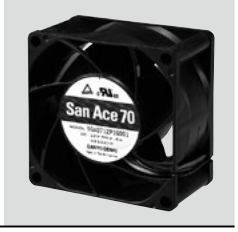

General Specifications

- Material ..... Frame: Plastic (Flammability: UL 94V-0), Impeller: Plastic (Flammability: UL 94V-0)
- Expected life ..... See the table below. (L10 life: 90% survival rate for continuous operation in free air at 60˚C, rated voltage) Expected life at 40°C is for reference only.
- Motor protection function ..... Locked rotor burnout protection, Reverse polarity protection For details, please refer to p. 608.
- Dielectric strength ..... 50/60 Hz, 500 VAC, for 1 minute (between lead wire conductors and frame)
- Insulation resistance ..... 10 MΩ min. at 500 VDC (between lead wire conductors and frame)
- Sound pressure level (SPL) ..... A-weighted sound pressure level (SPL) at 1 m away from the air inlet.
- Storage temperature ..... -30 to +70˚C (Non-condensing)
- Lead wire ..... ⊕Red ⊖Black Sensor Yellow Control Brown
- Mass ..... 170 g

Specifications

The models listed below **have ribs and a pulse sensor with PWM control.** For models without ribs, append "1" to the end of model numbers.

Model no.	Rated voltage [V]	Operating voltage range [V]	PWM duty cycle* [%]	Rated current [A]	Rated input [W]	Rated speed [min⁻¹]	Max. airflow [m³/min]	Max. airflow [CFM]	Max. static pressure [Pa]	Max. static pressure [inchH₂O]	SPL [dB (A)]	Operating temperature [˚C]	Expected life [h]
9GA0712P1G001	12	10.8 to 13.2	100	2.6	31.2	16500	2.65	93.6	860	3.45	65	-20 to +70	40000/60˚C (70000/40˚C)
			0	0.16	1.92	4400	0.7	24.7	61	0.24	30		
9GA0712P1H001			100	1.1	13.2	12000	1.92	67.8	455	1.83	57		
			0	0.07	0.84	2500	0.4	14.1	20	0.08	19		

PWM frequency is 25 kHz. Models without ratings for 0% PWM duty cycle have zero speed at 0%. When control terminal is open, speed is the same as at 100% duty cycle.

Note 1: Sensor and control options are available for selection. Refer to the table on p. 639.
Note 2: The » mark indicates Short LeadTime Service applicable models. See p. 664 for details.

Airflow - Static Pressure Characteristics / PWM Duty - Speed Characteristics Example

9GA0712P1G001 With pulse sensor with PWM control

PWM duty cycle

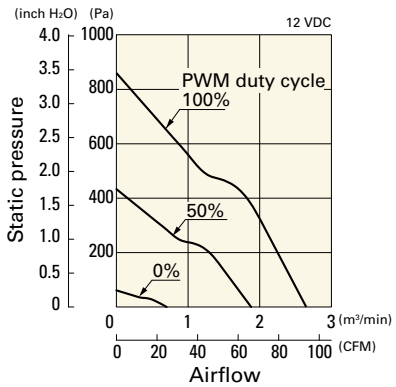

Operating voltage range

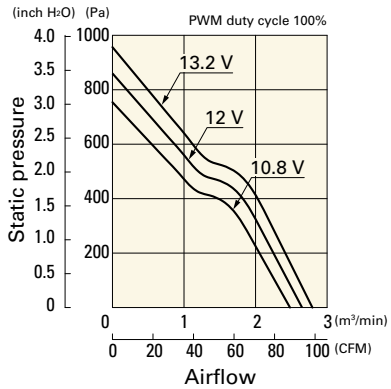

PWM duty - Speed characteristics example

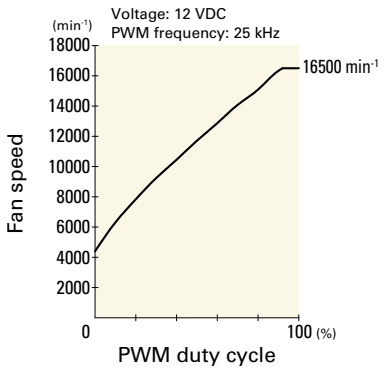

Airflow - Static Pressure Characteristics / PWM Duty - Speed Characteristics Example

9GA0712P1H001 With pulse sensor with PWM control

PWM duty cycle

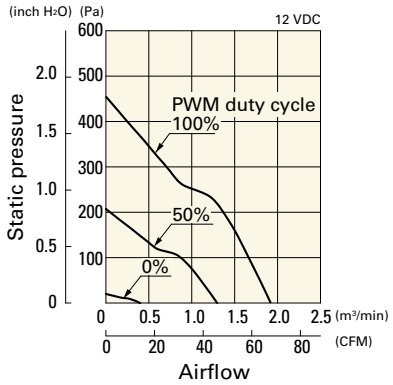

Operating voltage range

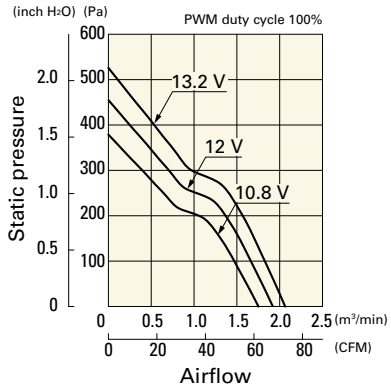

PWM duty - Speed characteristics example

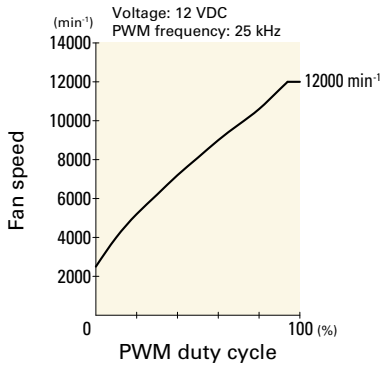

Dimensions (unit: mm) (With ribs)

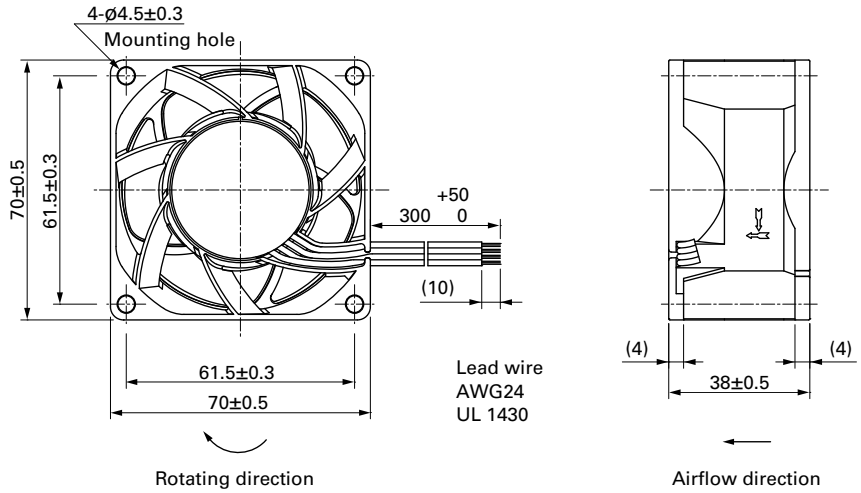

Reference Dimensions of Mounting Holes and Vent Opening (unit: mm)

Inlet side

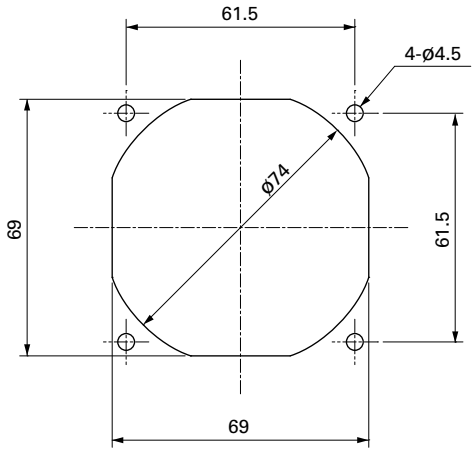

Outlet side

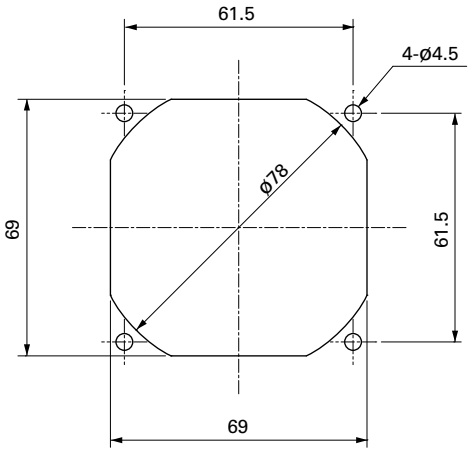

Options

Finger guards page: p. 590

Model no.: 109-1128

DC Fan

80×80×15 mm

San Ace 80 9GA type Low Power Consumption Fan

General Specifications

- Material ..... Frame: Plastic (Flammability: UL 94V-0), Impeller: Plastic (Flammability: UL 94V-0)
- Expected life ..... See the table below. (L10 life: 90% survival rate for continuous operation in free air at 60˚C, rated voltage) Expected life at 40°C is for reference only.
- Motor protection function ..... Locked rotor burnout protection, Reverse polarity protection For details, please refer to p. 608.
- Dielectric strength ..... 50/60 Hz, 500 VAC, for 1 minute (between lead wire conductors and frame)
- Insulation resistance ..... 10 MΩ min. at 500 VDC (between lead wire conductors and frame)
- Sound pressure level (SPL) ..... A-weighted sound pressure level (SPL) at 1 m away from the air inlet.
- Storage temperature ..... -30 to +70˚C (Non-condensing)
- Lead wire ..... ⊕Red ⊖Black Sensor Yellow Control Brown (For models without PWM control, there is no speed control wiring.)
- Mass ..... 65 g

Specifications

The models listed below **have ribs and a pulse sensor with PWM control.**

Model no.	Rated voltage [V]	Operating voltage range [V]	PWM duty cycle* [%]	Rated current [A]	Rated input [W]	Rated speed [min⁻¹]	Max. airflow [m³/min]	Max. airflow [CFM]	Max. static pressure [Pa]	Max. static pressure [inchH₂O]	SPL [dB (A)]	Operating temperature [˚C]	Expected life [h]
9GA0812P7G001	12	10.2 to 13.8	100	0.29	3.48	6100	1.44	50.9	84.0	0.34	41	-20 to +70	40000/60˚C (70000/40˚C)
9GA0812P7S001			100	0.17	2.04	5000	1.18	41.7	56.4	0.23	37		
9GA0824P7G001	24	20.4 to 27.6	100	0.13	3.12	6100	1.44	50.9	84.0	0.34	41		
9GA0824P7S001			100	0.08	1.92	5000	1.18	41.7	56.4	0.23	37		

PWM frequency is 25 kHz. Models without ratings for 0% PWM duty cycle have zero speed at 0%. When control terminal is open, speed is the same as at 100% duty cycle.

The models listed below **have ribs and a pulse sensor.**

Model no.	Rated voltage [V]	Operating voltage range [V]	Rated current [A]	Rated input [W]	Rated speed [min⁻¹]	Max. airflow [m³/min]	Max. airflow [CFM]	Max. static pressure [Pa]	Max. static pressure [inchH₂O]	SPL [dB (A)]	Operating temperature [˚C]	Expected life [h]
9GA0812H7001	12	6 to 13.2	0.09	1.08	3800	0.89	31.4	32.6	0.13	29	-20 to +70	40000/60˚C (70000/40˚C)
9GA0812M7001		7 to 13.2	0.04	0.48	2500	0.58	20.5	14	0.056	20		60000/60˚C (90000/40˚C)
9GA0824H7001	24	12 to 26.4	0.05	1.2	3800	0.89	31.4	32.6	0.13	29		40000/60˚C (70000/40˚C)
9GA0824M7001			0.02	0.48	2500	0.58	20.5	14	0.056	20		60000/60˚C (90000/40˚C)

Note 1: Sensor and control options are available for selection. Refer to the table on pp. 639 to 640.
Note 2: The » mark indicates Short LeadTime Service applicable models. See p. 664 for details.

Airflow - Static Pressure Characteristics / PWM Duty - Speed Characteristics Example

9GA0812P7G001 With pulse sensor with PWM control

PWM duty cycle

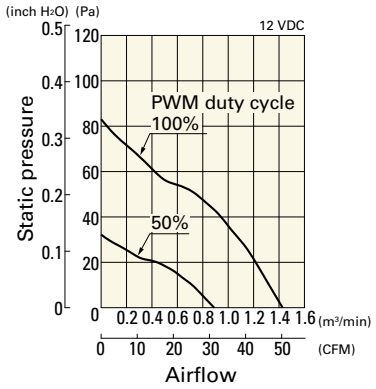

Operating voltage range

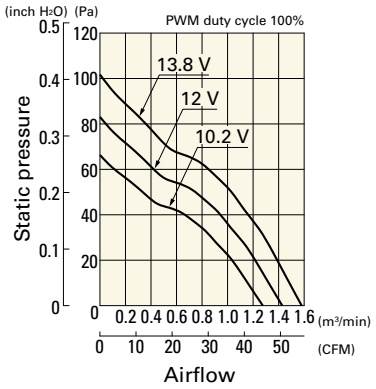

PWM duty - Speed characteristics example

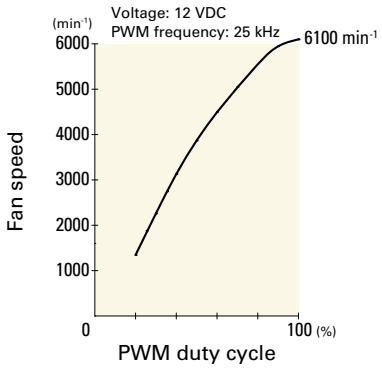

Airflow - Static Pressure Characteristics / PWM Duty - Speed Characteristics Example

9GA0812P7S001 With pulse sensor with PWM control

PWM duty cycle

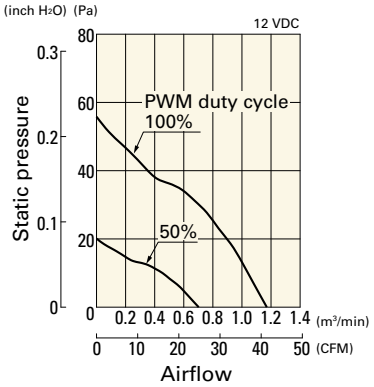

Operating voltage range

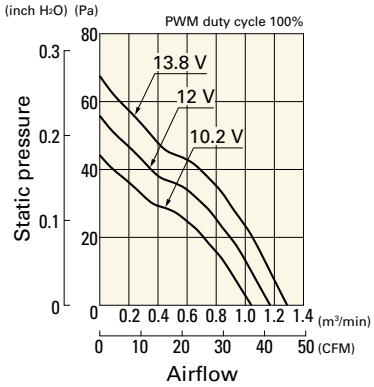

PWM duty - Speed characteristics example

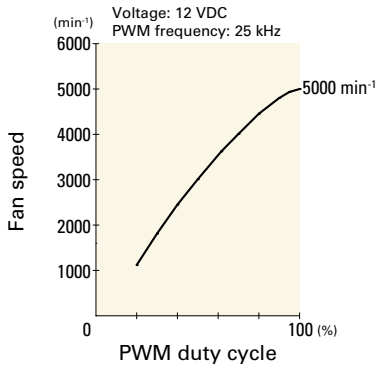

9GA0824P7G001 With pulse sensor with PWM control

PWM duty cycle

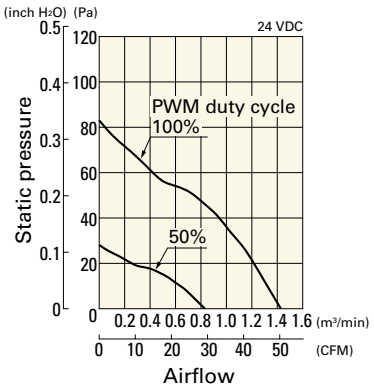

Operating voltage range

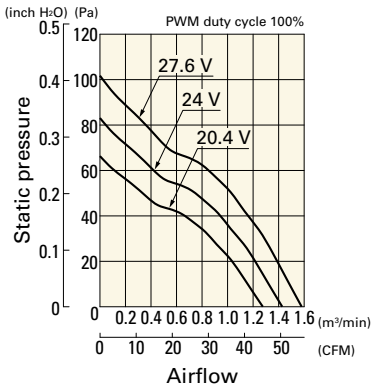

PWM duty - Speed characteristics example

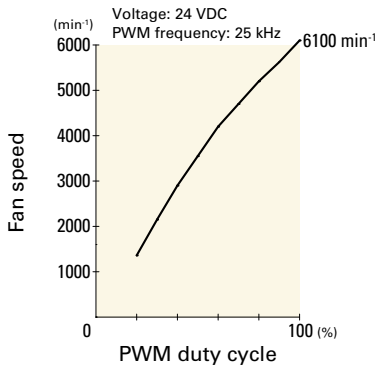

9GA0824P7S001 With pulse sensor with PWM control

PWM duty cycle

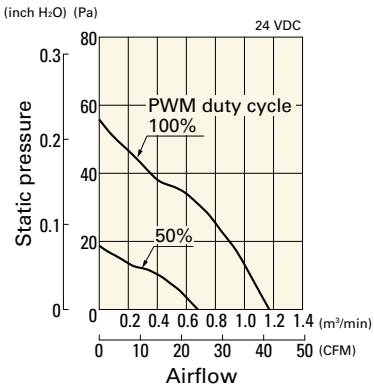

Operating voltage range

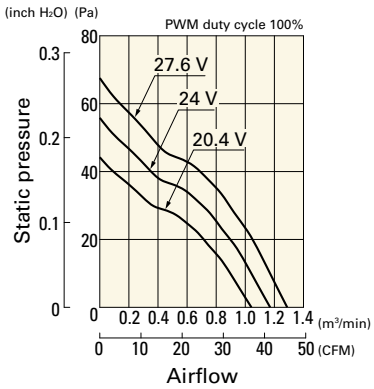

PWM duty - Speed characteristics example

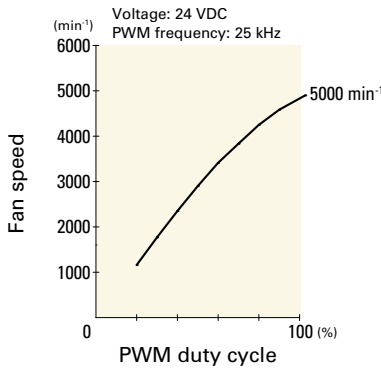

Airflow - Static Pressure Characteristics

9GA0812H7001 With pulse sensor

Operating voltage range

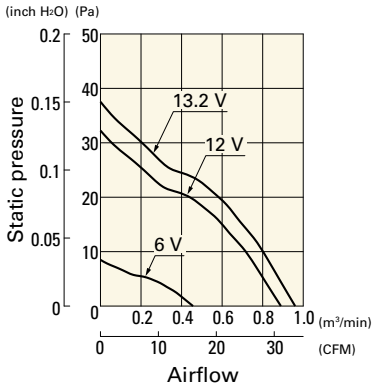

9GA0812M7001 With pulse sensor

Operating voltage range

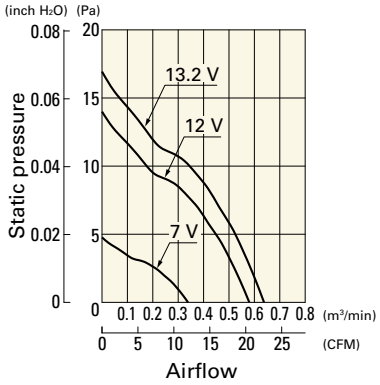

9GA0824H7001 With pulse sensor

Operating voltage range

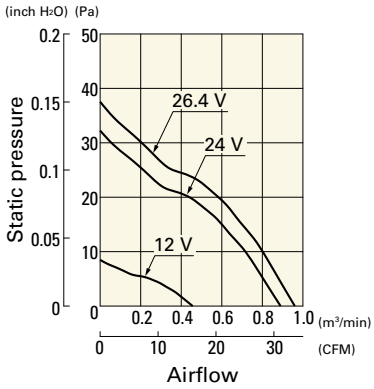

9GA0824M7001 With pulse sensor

Operating voltage range

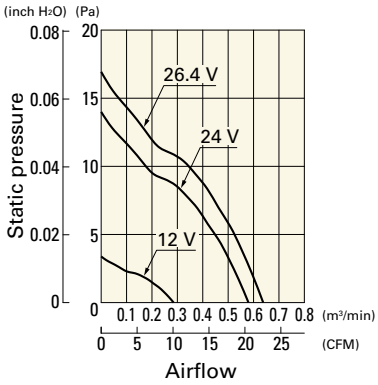

Dimensions (unit: mm) (With pulse sensor with PWM control)

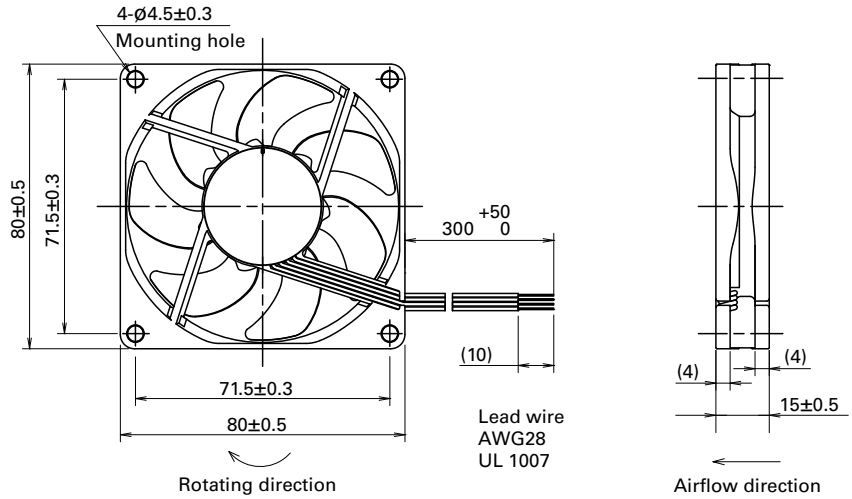

Reference Dimensions of Mounting Holes and Vent Opening (unit: mm)

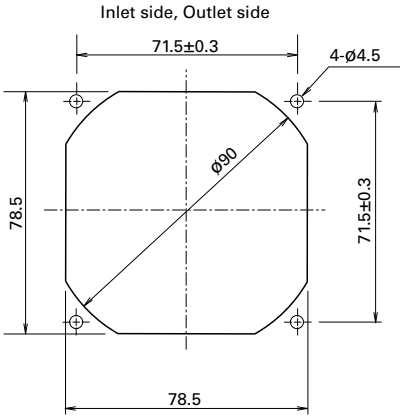

Options

Finger guards page: p. 590

Model no.: 109-049E, 109-049H

Resin filter kits page: p. 598

Model no.: 109-1002F13 (13PPI), 109-1002F20 (20PPI),
109-1002F30 (30PPI), 109-1002F40 (40PPI)

Resin finger guards page: p. 597

Model no.: 109-1002G

DC Fan

80×80×20 mm

San Ace 80 9GA type Low Power Consumption Fan

General Specifications

- Material ..... Frame: Plastic (Flammability: UL 94V-0), Impeller: Plastic (Flammability: UL 94V-0)
- Expected life ..... See the table below. (L10 life: 90% survival rate for continuous operation in free air at 60˚C, rated voltage) Expected life at 40°C is for reference only.
- Motor protection function ..... Locked rotor burnout protection, Reverse polarity protection For details, please refer to p. 608.
- Dielectric strength ..... 50/60 Hz, 500 VAC, for 1 minute (between lead wire conductors and frame)
- Insulation resistance ..... 10 MΩ min. at 500 VDC (between lead wire conductors and frame)
- Sound pressure level (SPL) ..... A-weighted sound pressure level (SPL) at 1 m away from the air inlet.
- Storage temperature ..... -30 to +70˚C (Non-condensing)
- Lead wire ..... ⊕Red ⊖Black Sensor Yellow Control Brown
- Mass ..... 80 g

Specifications

The models listed below **have ribs and a pulse sensor with PWM control.**

Model no.	Rated voltage [V]	Operating voltage range [V]	PWM duty cycle* [%]	Rated current [A]	Rated input [W]	Rated speed [min⁻¹]	Max. airflow [m³/min]	Max. airflow [CFM]	Max. static pressure [Pa]	Max. static pressure [inchH₂O]	SPL [dB (A)]	Operating temperature [˚C]	Expected life [h]
9GA0812P6G001	12	10.2 to 13.8	100	0.3	3.6	5850	1.72	60.78	110	0.44	45	-20 to +70	40000/60˚C (70000/40˚C)
9GA0812P6M001			100	0.06	0.72	2900	0.84	29.68	27	0.11	26.5		60000/60˚C (90000/40˚C)
9GA0824P6G001	24	20.4 to 27.6	100	0.15	3.6	5850	1.72	60.78	110	0.44	45		40000/60˚C (70000/40˚C)
9GA0824P6M001			100	0.03	0.72	2900	0.84	29.68	27	0.11	26.5		60000/60˚C (90000/40˚C)

PWM frequency is 25 kHz. Models without ratings for 0% PWM duty cycle have zero speed at 0%. When control terminal is open, speed is the same as at 100% duty cycle.

Note 1: Sensor and control options are available for selection. Refer to the table on pp. 639 to 640.
Note 2: The » mark indicates Short LeadTime Service applicable models. See p. 664 for details.

Airflow - Static Pressure Characteristics / PWM Duty - Speed Characteristics Example

9GA0812P6G001 With pulse sensor with PWM control

PWM duty cycle

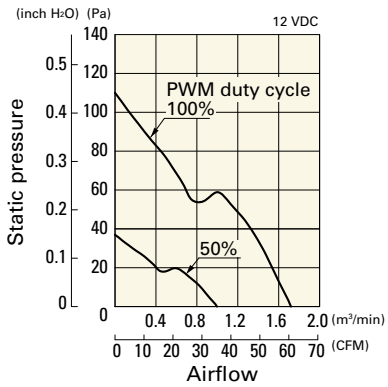

Operating voltage range

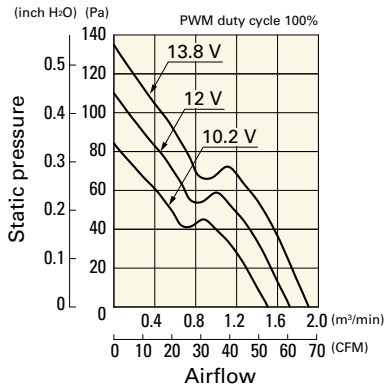

PWM duty - Speed characteristics example

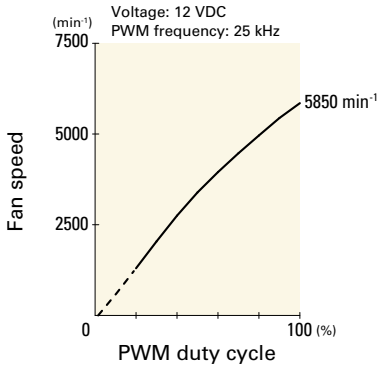

Airflow - Static Pressure Characteristics / PWM Duty - Speed Characteristics Example

9GA0812P6M001 With pulse sensor with PWM control

PWM duty cycle

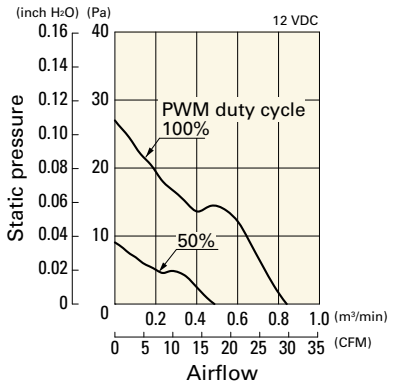

Operating voltage range

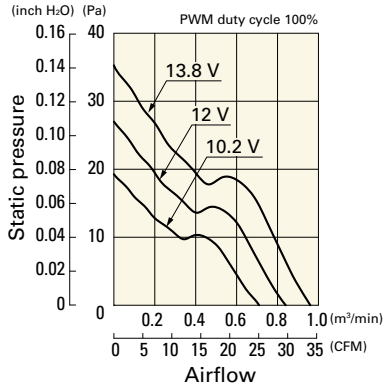

PWM duty - Speed characteristics example

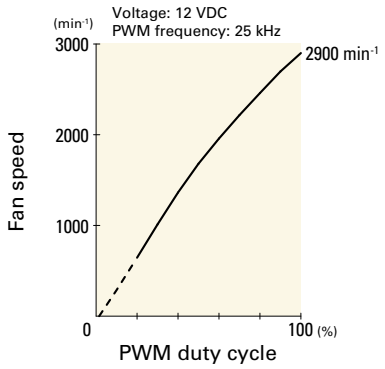

9GA0824P6G001 With pulse sensor with PWM control

PWM duty cycle

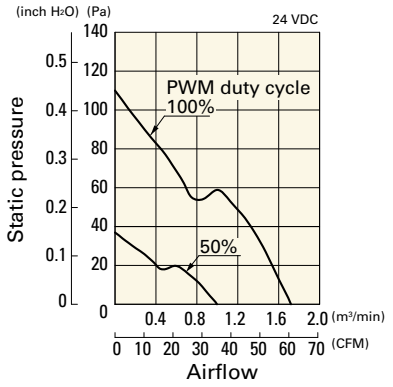

Operating voltage range

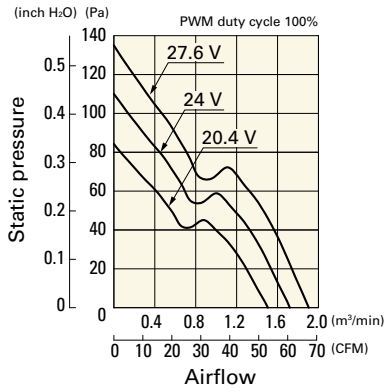

PWM duty - Speed characteristics example

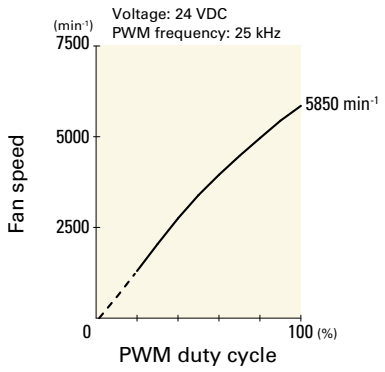

9GA0824P6M001 With pulse sensor with PWM control

PWM duty cycle

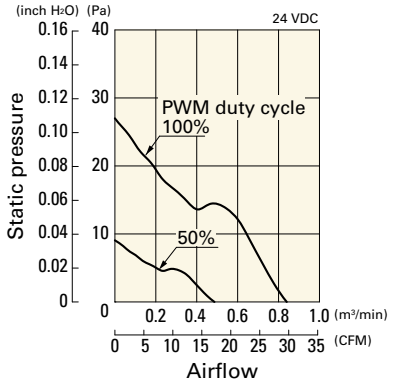

Operating voltage range

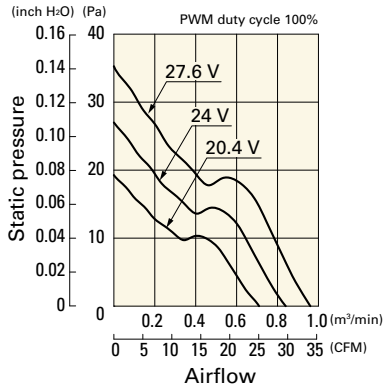

PWM duty - Speed characteristics example

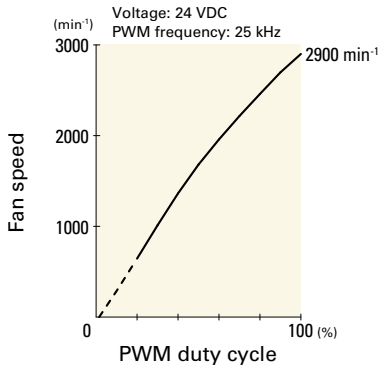

Dimensions (unit: mm)

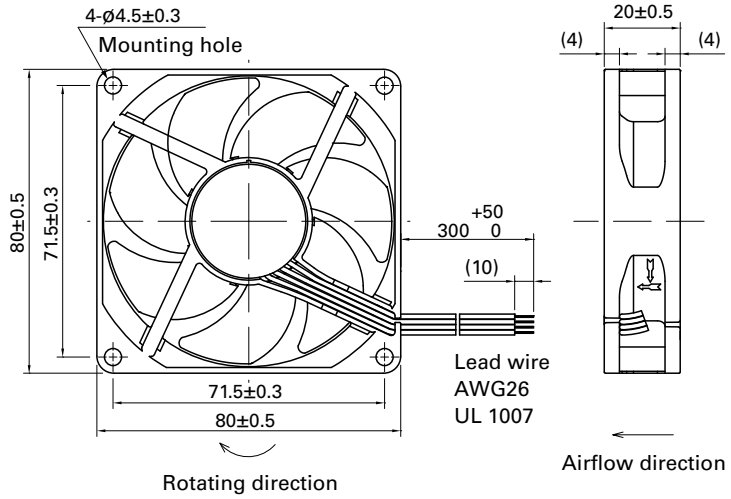

Reference Dimensions of Mounting Holes and Vent Opening (unit: mm)

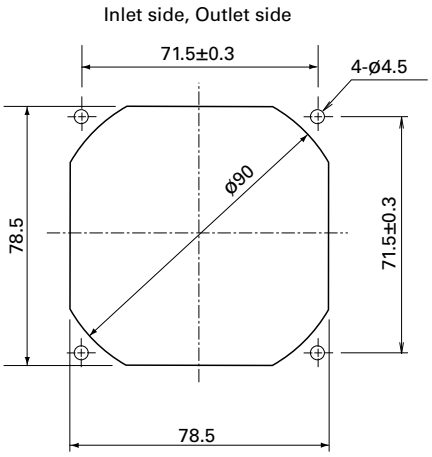

Options

Finger guards page: p. 590

Model no.: 109-049E, 109-049H

Resin filter kits page: p. 598

Model no.: 109-1002F13 (13PPI), 109-1002F20 (20PPI),
109-1002F30 (30PPI), 109-1002F40 (40PPI)

Resin finger guards page: p. 597

Model no.: 109-1002G

80×80×25 mm

San Ace 80 9GA type Low Power Consumption Fan

General Specifications

- Material ..... Frame: Plastic (Flammability: UL 94V-0), Impeller: Plastic (Flammability: UL 94V-0)
- Expected life ..... See the table below. (L10 life: 90% survival rate for continuous operation in free air at 60˚C, rated voltage) Expected life at 40°C is for reference only.
- Motor protection function ..... Locked rotor burnout protection, Reverse polarity protection For details, please refer to p. 608.
- Dielectric strength ..... 50/60 Hz, 500 VAC, for 1 minute (between lead wire conductors and frame)
- Insulation resistance ..... 10 MΩ min. at 500 VDC (between lead wire conductors and frame)
- Sound pressure level (SPL) ..... A-weighted sound pressure level (SPL) at 1 m away from the air inlet.
- Storage temperature ..... -30 to +70˚C (Non-condensing)
- Lead wire ..... ⊕Red ⊖Black Sensor Yellow Control Brown
- Mass ..... 110 g

Specifications

The models listed below **have ribs and a pulse sensor with PWM control.** For models without ribs, append "1" to the end of model numbers.

Model no.	Rated voltage [V]	Operating voltage range [V]	PWM duty cycle* [%]	Rated current [A]	Rated input [W]	Rated speed [min⁻¹]	Max. airflow [m³/min]	Max. airflow [CFM]	Max. static pressure [Pa]	Max. static pressure [inchH₂O]	SPL [dB (A)]	Operating temperature [˚C]	Expected life [h]
9GA0812P4J001	12	10.8 to 13.2	100	0.6	7.2	7400	2.07	73.0	177.6	0.7	48	-20 to +70	60000/60˚C (90000/40˚C)
			25	0.08	0.96	2500	0.69	24.3	20.2	0.08	21		
9GA0812P4G001			100	0.48	5.76	6800	1.91	67.4	150	0.6	45		
			25	0.06	0.72	1500	0.42	14.8	7.2	0.02	17		
9GA0824P4J001	24	21.6 to 26.4	100	0.28	6.72	7400	2.07	73.0	177.6	0.7	48		
			25	0.06	1.44	2800	0.78	27.5	25.4	0.1	23		
9GA0824P4G001			100	0.21	5.04	6800	1.91	67.4	150	0.6	45		
			25	0.04	0.96	2100	0.58	20.4	14.3	0.05	19		

PWM frequency is 25 kHz. Models without ratings for 0% PWM duty cycle have zero speed at 0%. When control terminal is open, speed is the same as at 100% duty cycle.

Note 1: Sensor and control options are available for selection. Refer to the table on pp. 639 to 640.
Note 2: The » mark indicates Short LeadTime Service applicable models. See p. 664 for details.

Airflow - Static Pressure Characteristics / PWM Duty - Speed Characteristics Example

9GA0812P4J001 With pulse sensor with PWM control

PWM duty cycle

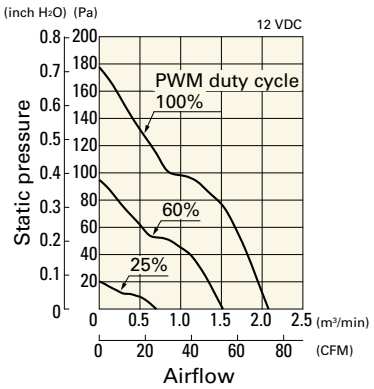

Operating voltage range

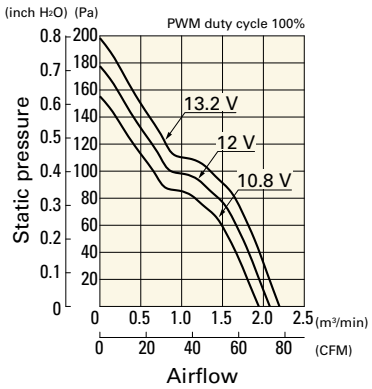

PWM duty - Speed characteristics example

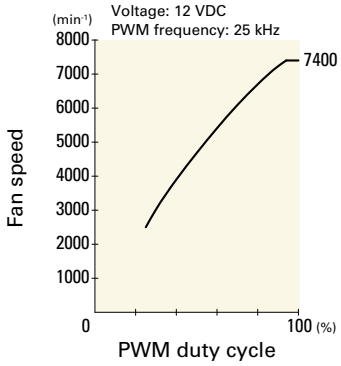

Airflow - Static Pressure Characteristics / PWM Duty - Speed Characteristics Example

9GA0812P4G001 With pulse sensor with PWM control

PWM duty cycle

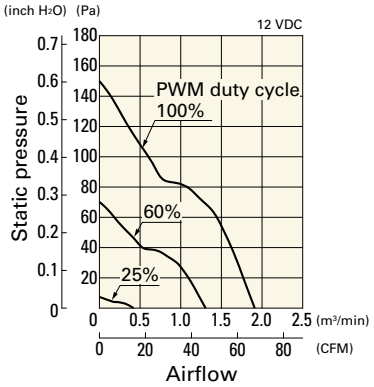

Operating voltage range

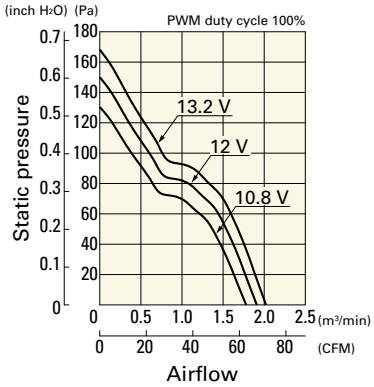

PWM duty - Speed characteristics example

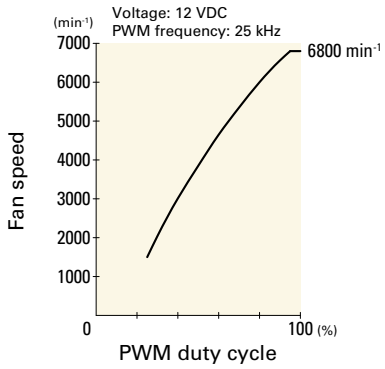

9GA0824P4J001 With pulse sensor with PWM control

PWM duty cycle

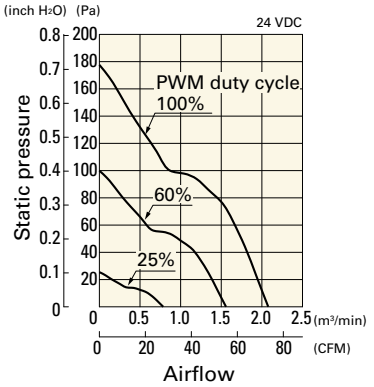

Operating voltage range

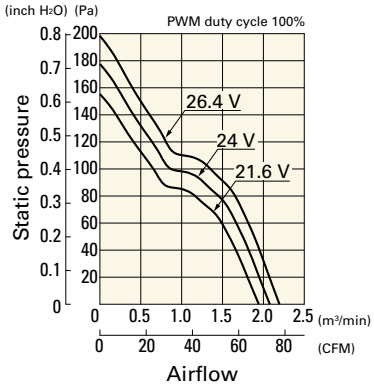

PWM duty - Speed characteristics example

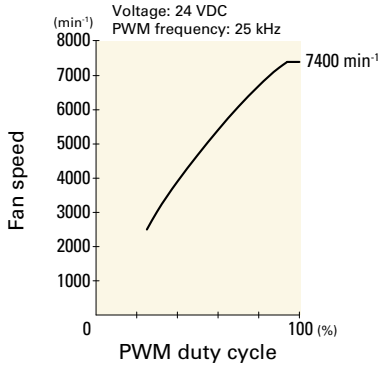

9GA0824P4G001 With pulse sensor with PWM control

PWM duty cycle

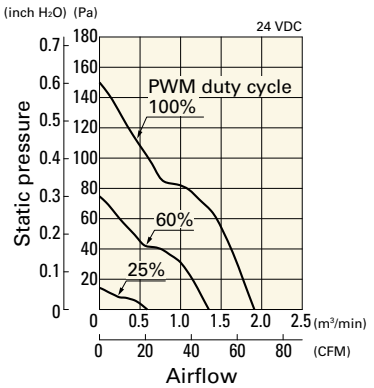

Operating voltage range

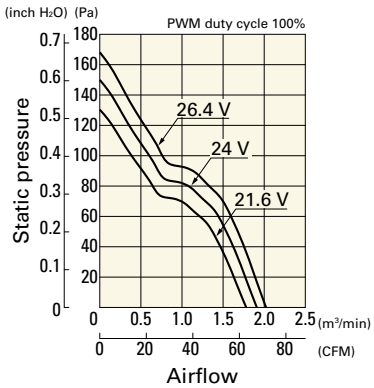

PWM duty - Speed characteristics example

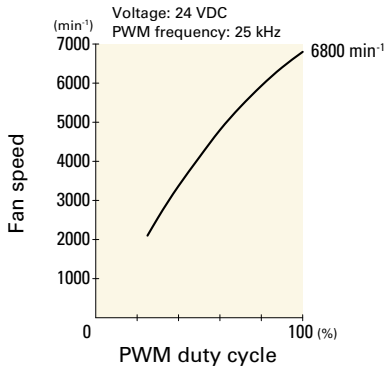

Dimensions (unit: mm) (With ribs)

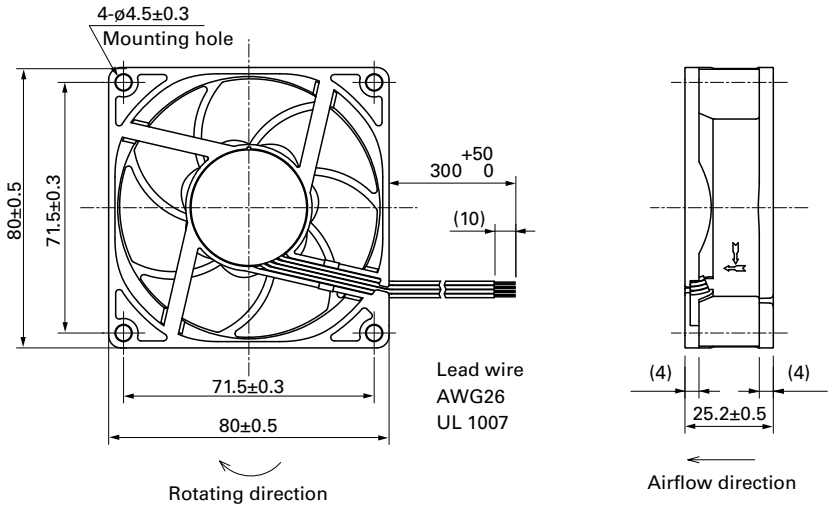

Reference Dimensions of Mounting Holes and Vent Opening (unit: mm)

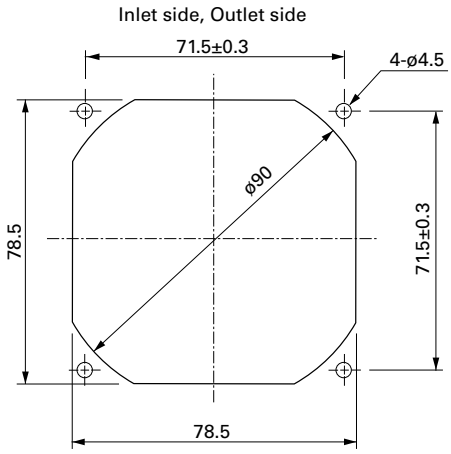

Options

Finger guards page: p. 590

Model no.: 109-049E, 109-049H

Resin finger guards page: p. 597

Model no.: 109-1002G

Resin filter kits page: p. 598

Model no.: 109-1002F13 (13PPI), 109-1002F20 (20PPI),
109-1002F30 (30PPI), 109-1002F40 (40PPI)

DC Fan

80×80×25 mm

San Ace 80 9RA type

General Specifications

- Material ..... Frame: Plastic (Flammability: UL 94V-0), Impeller: Plastic (Flammability: UL 94V-1)
- Expected life ..... See the table below. (L10 life: 90% survival rate for continuous operation in free air at 60˚C, rated voltage) Expected life at 40°C is for reference only.
- Motor protection function ..... Locked rotor burnout protection, Reverse polarity protection For details, please refer to p. 608.
- Dielectric strength ..... 50/60 Hz, 500 VAC, for 1 minute (between lead wire conductors and frame)
- Insulation resistance ..... 10 MΩ min. at 500 VDC (between lead wire conductors and frame)
- Sound pressure level (SPL) ..... A-weighted sound pressure level (SPL) at 1 m away from the air inlet.
- Storage temperature ..... -30 to +70˚C (Non-condensing)
- Lead wire ..... ⊕Red ⊖Black Sensor Yellow Control Brown (For models without PWM control, there is no speed control wiring.)
- Mass ..... 110 g

Specifications

The models listed below **have ribs and a pulse sensor with PWM control.** For models without ribs, append "1" to the end of model numbers.

Model no.	Rated voltage [V]	Operating voltage range [V]	PWM duty cycle* [%]	Rated current [A]	Rated input [W]	Rated speed [min⁻¹]	Max. airflow [m³/min]	Max. airflow [CFM]	Max. static pressure [Pa]	Max. static pressure [inchH₂O]	SPL [dB (A)]	Operating temperature [˚C]	Expected life [h]
9RA0812P4G001	12	10.8 to 13.2	100	0.22	2.64	5000	1.4	49.4	83	0.33	37	-20 to +70	60000/60˚C (90000/40˚C)
			30	0.03	0.36	1100	0.3	10.6	4	0.01	11		
9RA0824P4G001	24	21.6 to 26.4	100	0.11	2.64	5000	1.4	49.4	83	0.33	37		
			20	0.02	0.48	1000	0.28	9.8	3.3	0.01	10		
9RA0848P4G001	48	43.2 to 52.8	100	0.07	3.36	5000	1.4	49.4	83	0.33	37		
			20	0.02	0.96	1700	0.47	16.5	9.6	0.04	14		

PWM frequency is 25 kHz. Models without ratings for 0% PWM duty cycle have zero speed at 0%. When control terminal is open, speed is the same as at 100% duty cycle.

The models listed below **have ribs and a pulse sensor.** For models without ribs, append "1" to the end of model numbers.

Model no.	Rated voltage [V]	Operating voltage range [V]	Rated current [A]	Rated input [W]	Rated speed [min⁻¹]	Max. airflow [m³/min]	Max. airflow [CFM]	Max. static pressure [Pa]	Max. static pressure [inchH₂O]	SPL [dB (A)]	Operating temperature [˚C]	Expected life [h]
9RA0812G4001	12	7 to 13.8	0.22	2.64	5000	1.4	49.4	83	0.33	37	-20 to +70	60000/60˚C (90000/40˚C)
9RA0812S4001			0.12	1.44	3900	1.09	38.5	50	0.21	31		
9RA0812H4001			0.08	0.96	3300	0.92	32.5	36	0.14	27		
9RA0812M4001			0.06	0.72	2650	0.74	26.1	23	0.09	22		
9RA0824G4001	24	14 to 27.6	0.11	2.64	5000	1.4	49.4	83	0.33	37		
9RA0824S4001			0.06	1.44	3900	1.09	38.5	50	0.21	31		
9RA0824H4001			0.05	1.2	3300	0.92	32.5	36	0.14	27		
9RA0824M4001			0.04	0.96	2650	0.74	26.1	23	0.09	22		
9RA0848G4001	48	36 to 55.2	0.07	3.36	5000	1.4	49.4	83	0.33	37		
9RA0848S4001			0.05	2.4	3900	1.09	38.5	50	0.21	31		

Note 1: Sensor and control options are available for selection. Refer to the table on pp. 645 to 646.
Note 2: The mark indicates Short LeadTime Service applicable models. See p. 664 for details.

Airflow - Static Pressure Characteristics / PWM Duty - Speed Characteristics Example

9RA0812P4G001 With pulse sensor with PWM control

PWM duty cycle

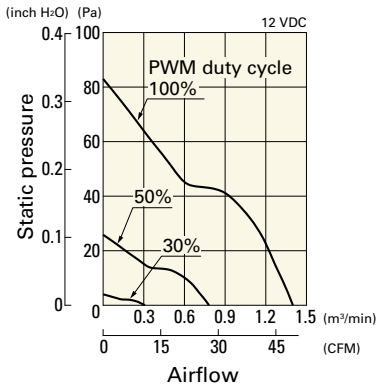

Operating voltage range

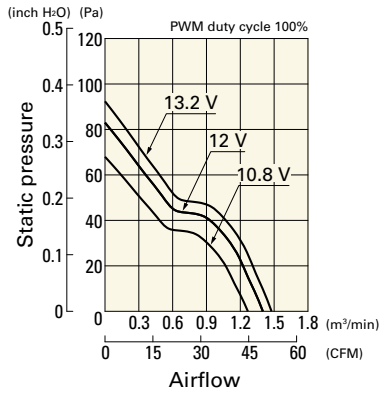

PWM duty - Speed characteristics example

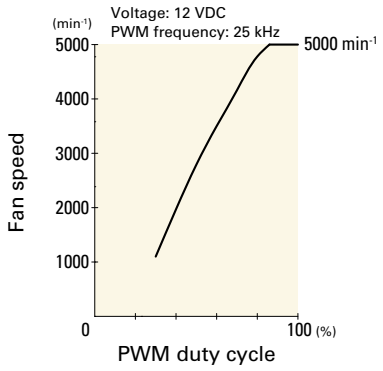

9RA0824P4G001 With pulse sensor with PWM control

PWM duty cycle

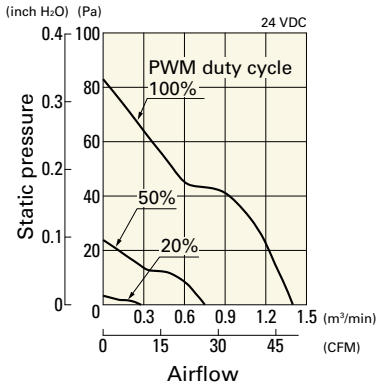

Operating voltage range

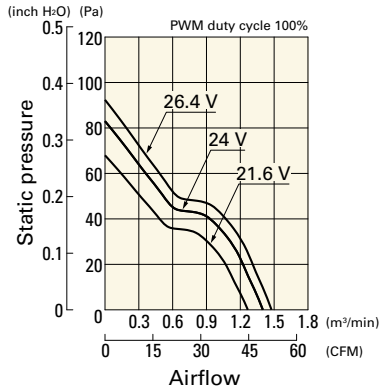

PWM duty - Speed characteristics example

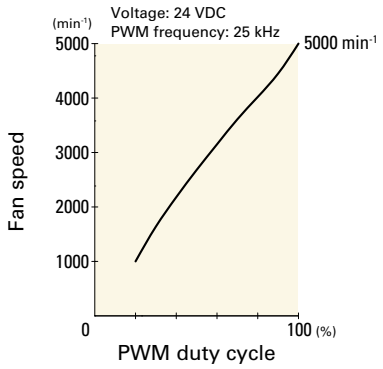

9RA0848P4G001 With pulse sensor with PWM control

PWM duty cycle

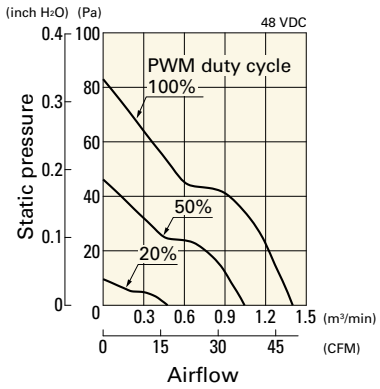

Operating voltage range

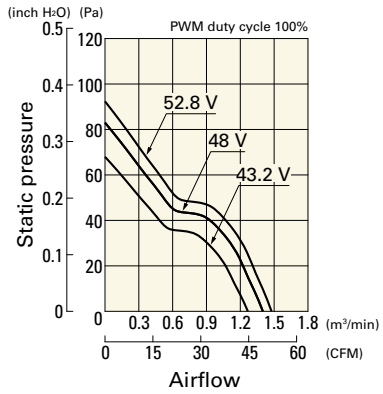

PWM duty - Speed characteristics example

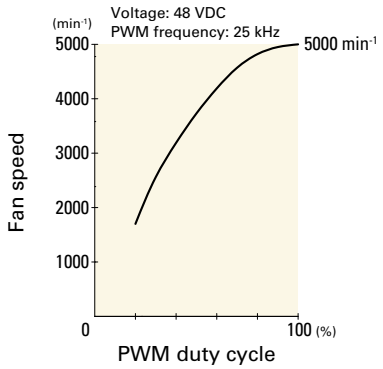

Airflow - Static Pressure Characteristics

9RA0812G4001 With pulse sensor

Operating voltage range

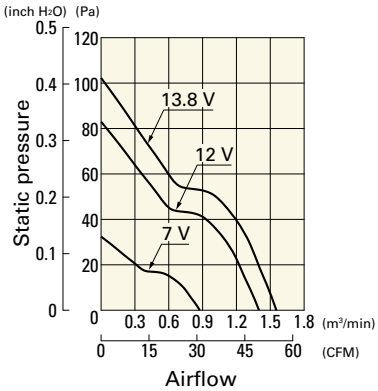

9RA0812S4001 With pulse sensor

Operating voltage range

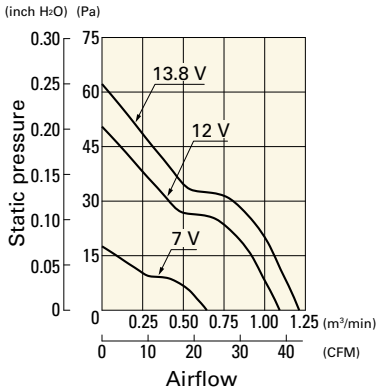

9RA0812H4001 With pulse sensor

Operating voltage range

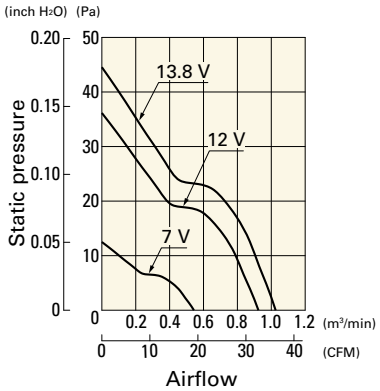

9RA0812M4001 With pulse sensor

Operating voltage range

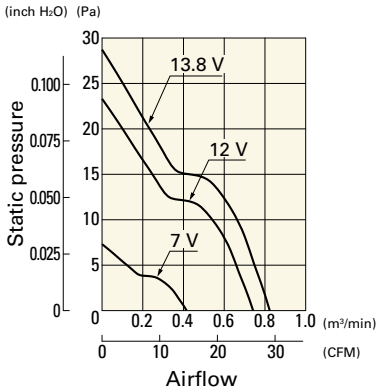

9RA0824G4001 With pulse sensor

Operating voltage range

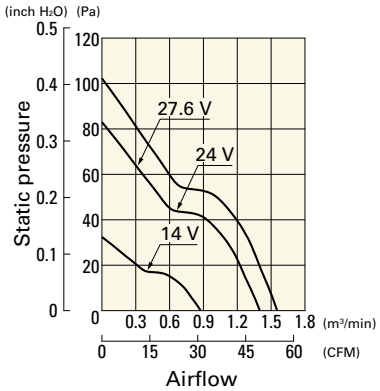

9RA0824S4001 With pulse sensor

Operating voltage range

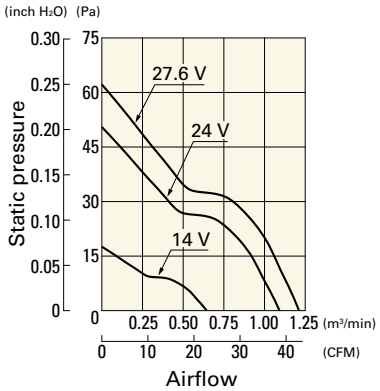

9RA0824H4001 With pulse sensor

Operating voltage range

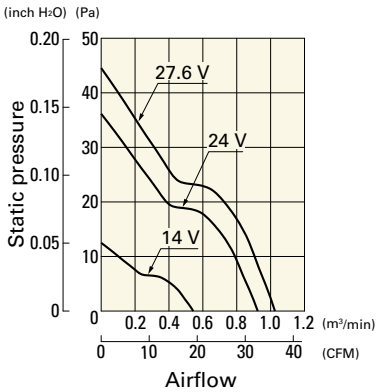

9RA0824M4001 With pulse sensor

Operating voltage range

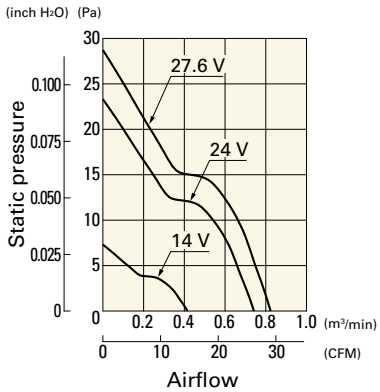

9RA0848G4001 With pulse sensor

Operating voltage range

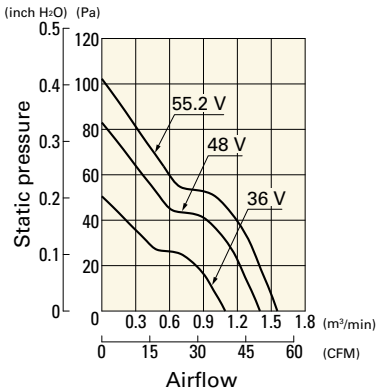

9RA0848S4001 With pulse sensor

Operating voltage range

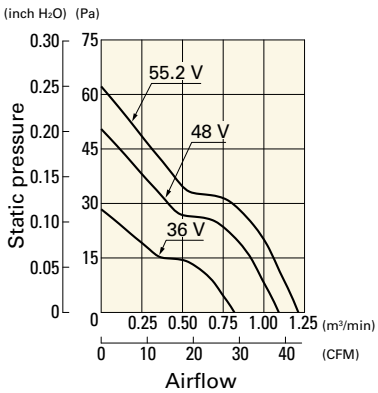

Dimensions (unit: mm) (Ribbed frame with pulse sensor with PWM control)

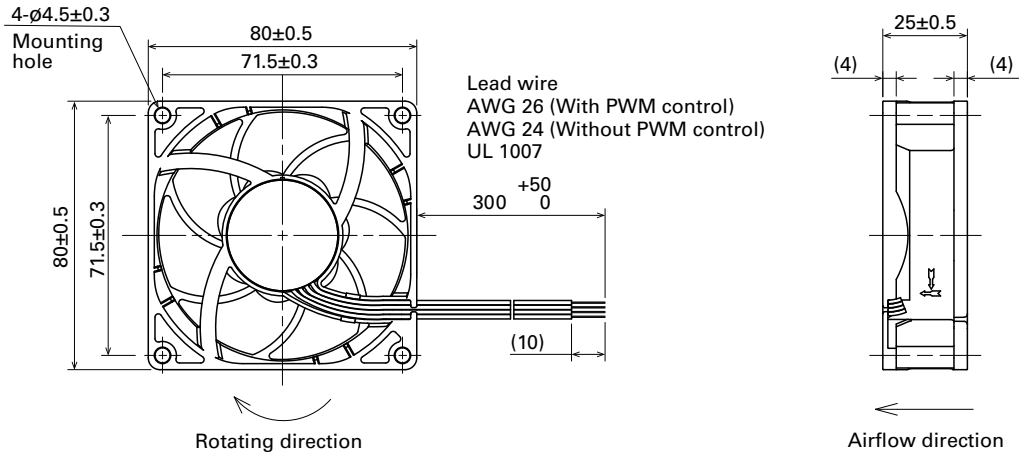

Reference Dimensions of Mounting Holes and Vent Opening (unit: mm)

Inlet side, Outlet side

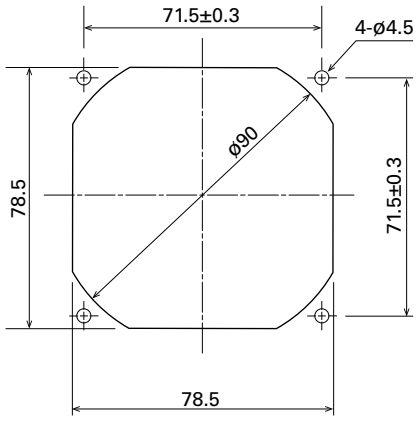

Options

Finger guards page: p. 590

Model no.: 109-049E, 109-049H

Resin finger guards page: p. 597

Model no.: 109-1002G

Resin filter kits page: p. 598

Model no.: 109-1002F13 (13PPI), 109-1002F20 (20PPI),
109-1002F30 (30PPI), 109-1002F40 (40PPI)

DC Fan

80×80×25 mm

San Ace 80 9S type Silent Fan

Model 9S0812H401 is not TÜV certified.

General Specifications

- Material ..... Frame: Plastic (Flammability: UL 94V-0), Impeller: Plastic (Flammability: UL 94V-1)
- Expected life ..... See the table below. (L10 life: 90% survival rate for continuous operation in free air at 60˚C, rated voltage) Expected life at 40°C is for reference only.
- Motor protection function ..... Locked rotor burnout protection, Reverse polarity protection For details, please refer to p. 608.
- Dielectric strength ..... 50/60 Hz, 500 VAC, for 1 minute (between lead wire conductors and frame)
- Insulation resistance ..... 10 MΩ min. at 500 VDC (between lead wire conductors and frame)
- Sound pressure level (SPL) ..... A-weighted sound pressure level (SPL) at 1 m away from the air inlet.
- Storage temperature ..... -30 to +70˚C (Non-condensing)
- Lead wire ..... ⊕Red ⊖Black Sensor Yellow
- Mass ..... 75 g

Specifications

The models listed below **have ribs and a pulse sensor.** For models without ribs, append "1" to the end of model numbers.

Model no.	Rated voltage [V]	Operating voltage range [V]	Rated current [A]	Rated input [W]	Rated speed [min⁻¹]	Max. airflow [m³/min]	Max. airflow [CFM]	Max. static pressure [Pa]	Max. static pressure [inchH₂O]	SPL [dB (A)]	Operating temperature [˚C]	Expected life [h]
9S0812H401	12	6 to 13.2	0.23	2.76	3400	1.12	39.5	52.15	0.2	31	-10 to +70	40000/60˚C (70000/40˚C)
9S0812F401		6 to 13.8	0.11	1.32	2800	0.93	32.8	35.5	0.143	24		
9S0812M401		7 to 13.8	0.08	0.96	2500	0.83	29.3	27.5	0.11	22		
9S0812L401			0.05	0.6	2000	0.66	23.3	18.1	0.073	16		
9S0824M401	24	10 to 26.4	0.06	1.44	2500	0.83	29.3	27.5	0.11	22		
9S0824L401			0.04	0.96	2000	0.66	23.3	18.1	0.073	16		

Note 1: Sensor and control options are available for selection. Refer to the table on p. 649.
Note 2: The » mark indicates Short Lead Time Service applicable models. See p. 664 for details.

Airflow - Static Pressure Characteristics

9S0812H401 With pulse sensor

Operating voltage range

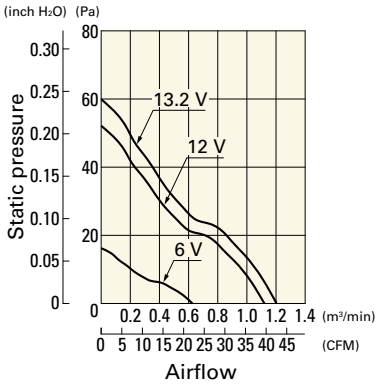

9S0812F401 With pulse sensor

Operating voltage range

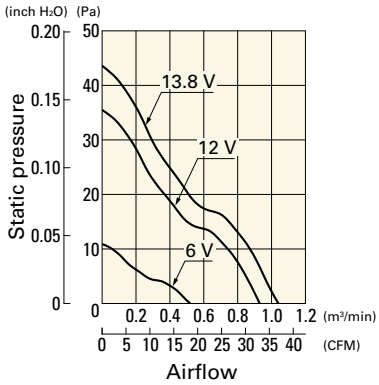

9S0812M401 With pulse sensor

Operating voltage range

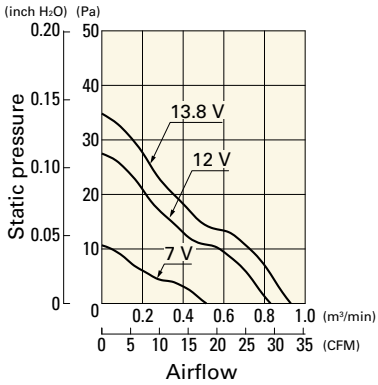

Airflow - Static Pressure Characteristics

9S0812L401 With pulse sensor

Operating voltage range

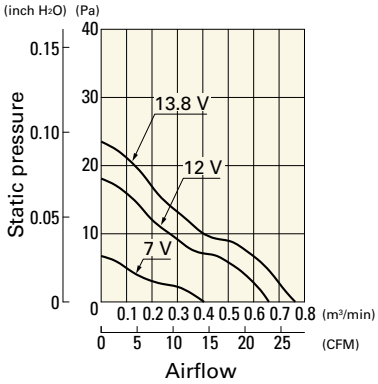

9S0824M401 With pulse sensor

Operating voltage range

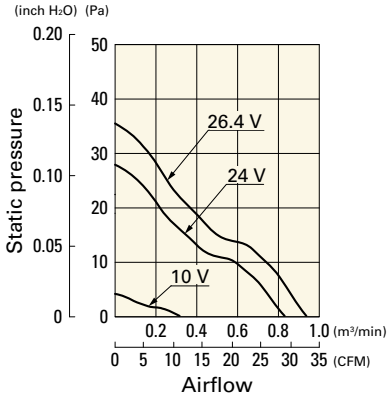

9S0824L401 With pulse sensor

Operating voltage range

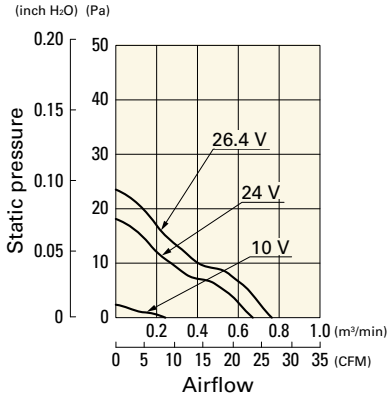

Dimensions (unit: mm) (With ribs)

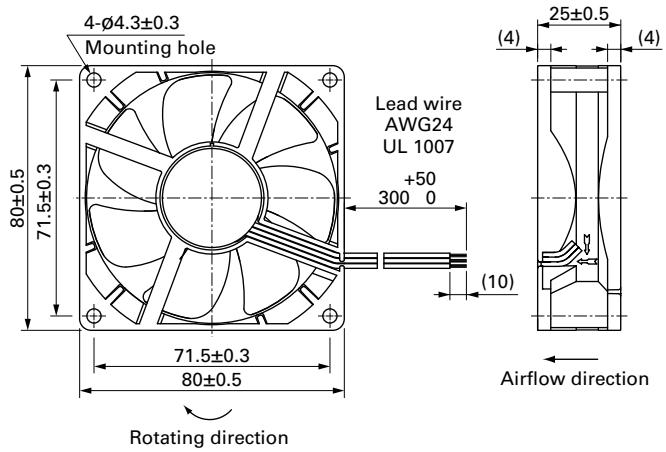

Reference Dimensions of Mounting Holes and Vent Opening (unit: mm)

Inlet side, Outlet side

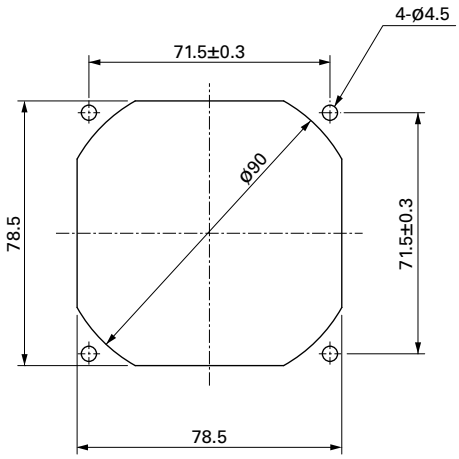

Options

Finger guards page: p. 590

Model no.: 109-049E, 109-049H

Resin finger guards page: p. 597

Model no.: 109-1002G

Resin filter kits page: p. 598

Model no.: 109-1002F13 (13PPI), 109-1002F20 (20PPI),
109-1002F30 (30PPI), 109-1002F40 (40PPI)

DC Fan

80×80×32 mm

San Ace 80 9GA type Low Power Consumption Fan

General Specifications

- Material ..... Frame: Plastic (Flammability: UL 94V-0), Impeller: Plastic (Flammability: UL 94V-0)
- Expected life ..... See the table below. (L10 life: 90% survival rate for continuous operation in free air at 60˚C, rated voltage) Expected life at 40°C is for reference only.
- Motor protection function ..... Locked rotor burnout protection, Reverse polarity protection For details, please refer to p. 608.
- Dielectric strength ..... 50/60 Hz, 500 VAC, for 1 minute (between lead wire conductors and frame)
- Insulation resistance ..... 10 MΩ min. at 500 VDC (between lead wire conductors and frame)
- Sound pressure level (SPL) ..... A-weighted sound pressure level (SPL) at 1 m away from the air inlet.
- Storage temperature ..... -30 to +70˚C (Non-condensing)
- Lead wire ..... ⊕Red ⊖Black Sensor Yellow Control Brown (For models without PWM control, there is no speed control wiring.)
- Mass ..... 130 g

Specifications

The models listed below **have ribs and a pulse sensor with PWM control.** For models without ribs, append "1" to the end of model numbers.

Model no.	Rated voltage [V]	Operating voltage range [V]	PWM duty cycle* [%]	Rated current [A]	Rated input [W]	Rated speed [min⁻¹]	Max. airflow [m³/min]	Max. airflow [CFM]	Max. static pressure [Pa]	Max. static pressure [inchH₂O]	SPL [dB (A)]	Operating temperature [˚C]	Expected life [h]
9GA0812P2S001	12	10.2 to 13.8	100	0.83	9.96	9700	2.45	86.5	360	1.45	57	-20 to +70	40000/60˚C (70000/40˚C)
			0	0.08	0.96	2800	0.71	25.1	30	0.12	24		
9GA0812P2H001			100	0.59	7.08	8700	2.2	77.7	294	1.18	54		
			0	0.05	0.6	2600	0.66	23.3	26	0.105	21		
9GA0812P2M001		10.2 to 12.6	100	0.35	4.2	6700	1.69	59.6	171	0.68	47	-20 to +55	
			0	0.04	0.48	1400	0.35	12.3	7.5	0.03	10		
9GA0824P2S001	24	20.4 to 27.6	100	0.42	10.1	9700	2.45	86.5	360	1.45	57	-20 to +70	
			0	0.05	1.2	2800	0.71	25.1	30	0.12	24		
9GA0848P2S001	48	40.8 to 55.2	100	0.22	10.56	9700	2.45	86.5	360	1.45	57	-10 to +70	
			0	0.04	1.92	2800	0.71	25.1	30	0.12	24		

PWM frequency is 25 kHz. Models without ratings for 0% PWM duty cycle have zero speed at 0%. When control terminal is open, speed is the same as at 100% duty cycle.

The models listed below **have ribs and a pulse sensor.** For models without ribs, append "1" to the end of model numbers.

Model no.	Rated voltage [V]	Operating voltage range [V]	Rated current [A]	Rated input [W]	Rated speed [min⁻¹]	Max. airflow [m³/min]	Max. airflow [CFM]	Max. static pressure [Pa]	Max. static pressure [inchH₂O]	SPL [dB (A)]	Operating temperature [˚C]	Expected life [h]
9GA0812A2001	12	6 to 13.2	0.31	3.72	6000	1.51	53.4	137.7	0.55	44	-20 to +70	40000/60˚C (70000/40˚C)
9GA0812B2001		6 to 13.8	0.13	1.56	4000	1.01	35.7	61.2	0.25	33		
9GA0812L2001		7 to 13.8	0.08	0.96	2600	0.66	23.3	26	0.1	21		
9GA0824A2001	24	12 to 26.4	0.15	3.6	6000	1.51	53.4	137.7	0.55	44		
9GA0824B2001		12 to 27.6	0.08	1.92	4000	1.01	35.7	61.2	0.25	33		
9GA0824L2001		14 to 27.6	0.05	1.2	2600	0.66	23.3	26	0.1	21		

Note 1: Sensor and control options are available for selection. Refer to the table on pp. 639 to 640.
Note 2: The » mark indicates Short LeadTime Service applicable models. See p. 664 for details.

Airflow - Static Pressure Characteristics / PWM Duty - Speed Characteristics Example

9GA0812P2S001 With pulse sensor with PWM control

PWM duty cycle

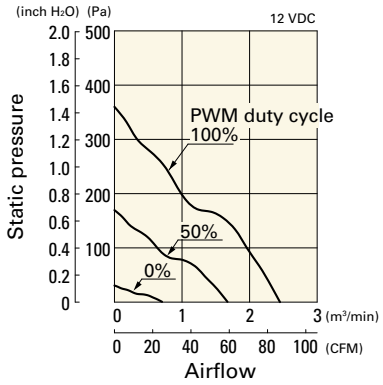

Operating voltage range

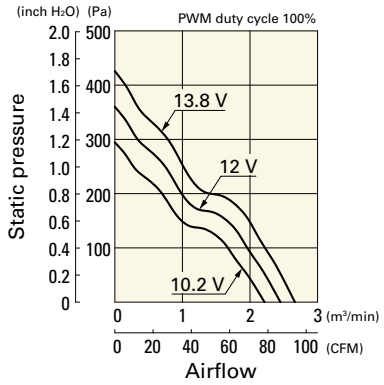

PWM duty - Speed characteristics example

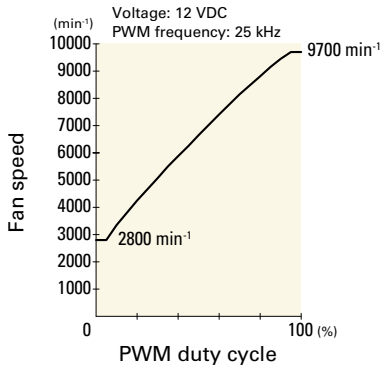

9GA0812P2H001 With pulse sensor with PWM control

PWM duty cycle

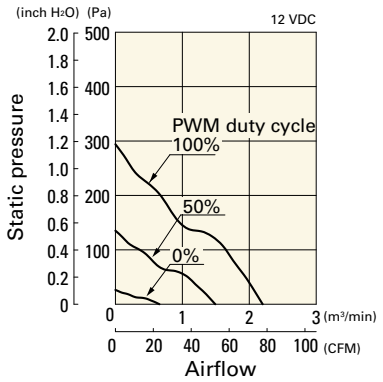

Operating voltage range

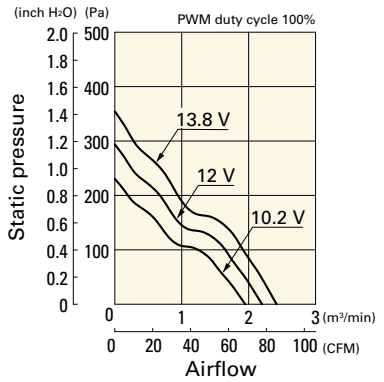

PWM duty - Speed characteristics example

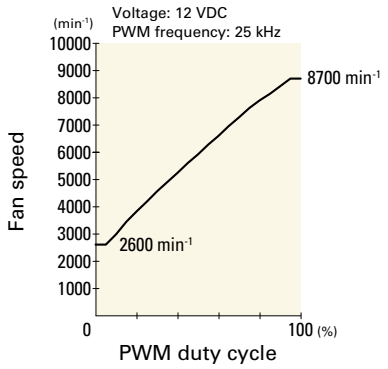

9GA0812P2M001 With pulse sensor with PWM control

PWM duty cycle

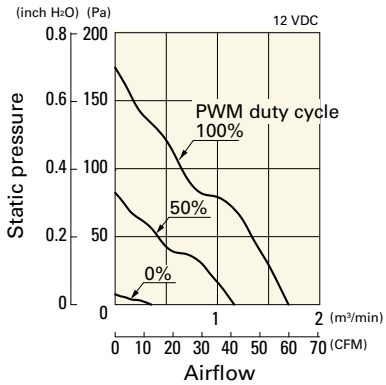

Operating voltage range

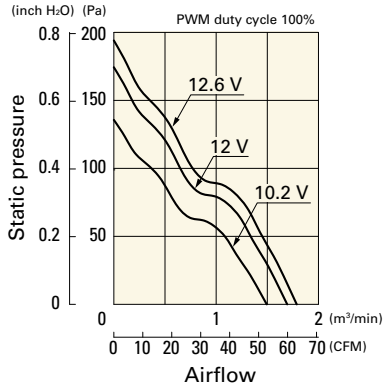

PWM duty - Speed characteristics example

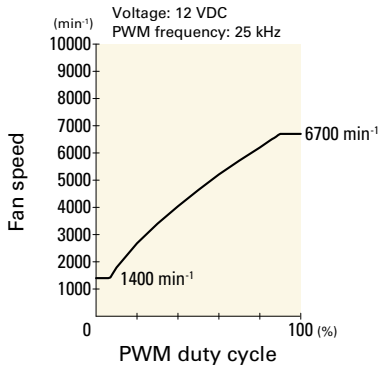

9GA0824P2S001 With pulse sensor with PWM control

PWM duty cycle

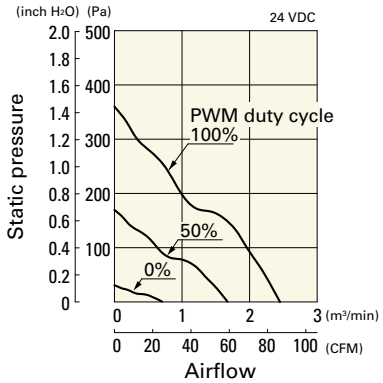

Operating voltage range

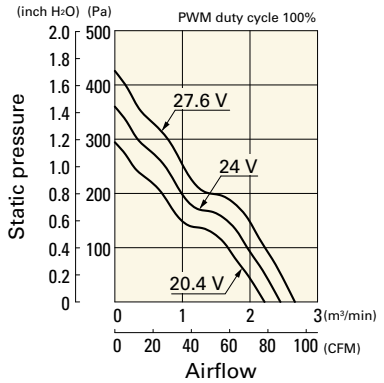

PWM duty - Speed characteristics example

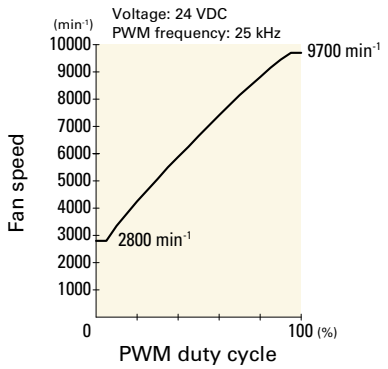

Airflow - Static Pressure Characteristics / PWM Duty - Speed Characteristics Example

9GA0848P2S001 With pulse sensor with PWM control

PWM duty cycle

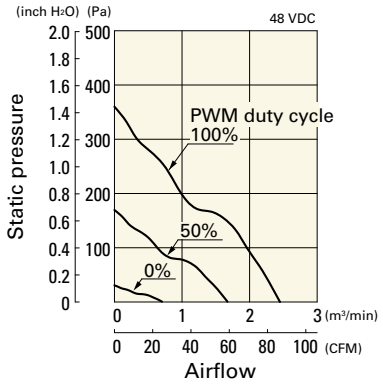

Operating voltage range

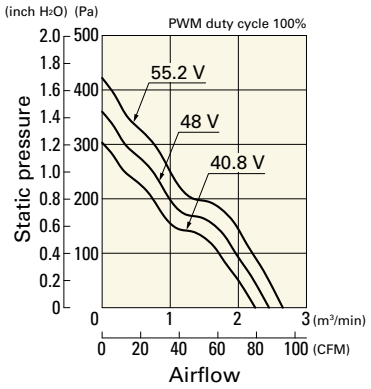

PWM duty - Speed characteristics example

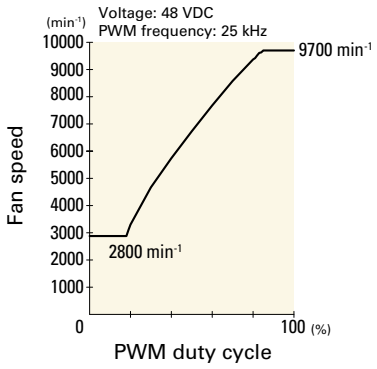

Airflow - Static Pressure Characteristics

9GA0812A2001 With pulse sensor

Operating voltage range

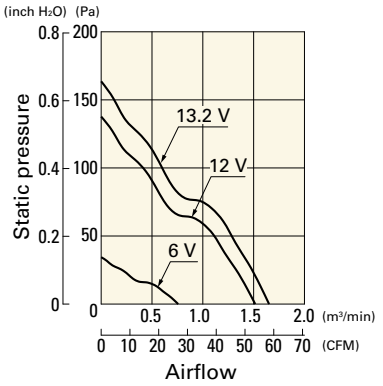

9GA0812B2001 With pulse sensor

Operating voltage range

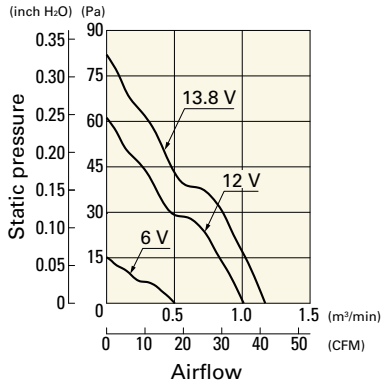

9GA0812L2001 With pulse sensor

Operating voltage range

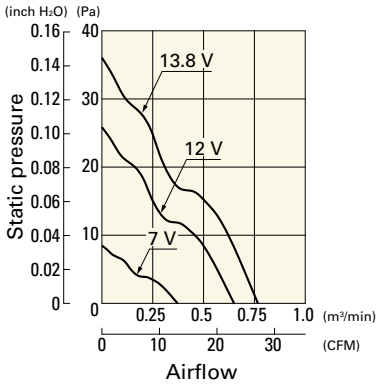

9GA0824A2001 With pulse sensor

Operating voltage range

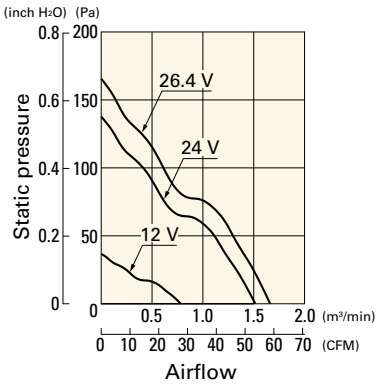

9GA0824B2001 With pulse sensor

Operating voltage range

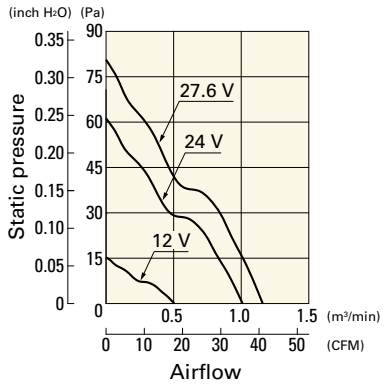

9GA0824L2001 With pulse sensor

Operating voltage range

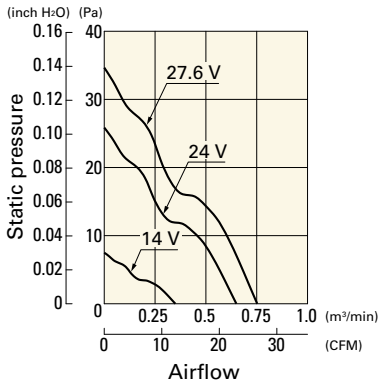

Dimensions (unit: mm) (Ribbed frame with pulse sensor with PWM control)

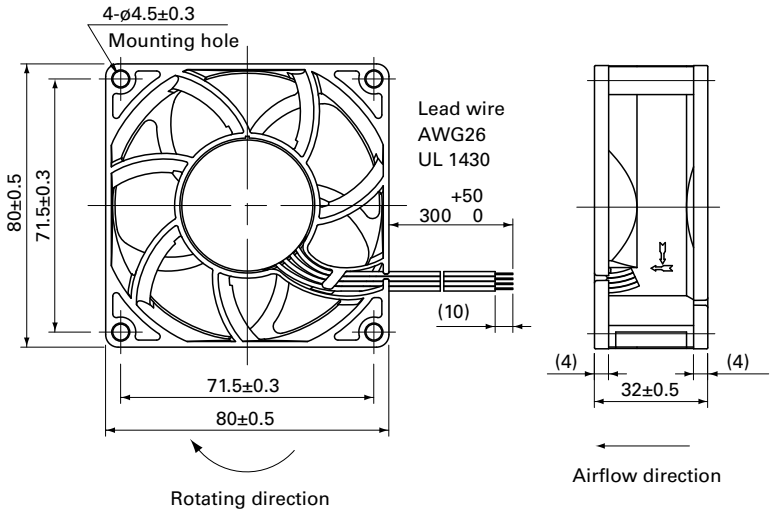

Reference Dimensions of Mounting Holes and Vent Opening (unit: mm)

Inlet side, Outlet side

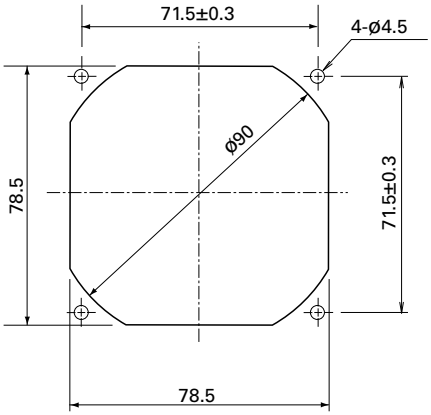

Options

Finger guards page: p. 590

Model no.: 109-049E, 109-049H

Resin filter kits page: p. 598

Model no.: 109-1002F13 (13PPI), 109-1002F20 (20PPI),
109-1002F30 (30PPI), 109-1002F40 (40PPI)

Resin finger guards page: p. 597

Model no.: 109-1002G

DC Fan

80×80×38 mm

San Ace 80 9HVB type

General Specifications

- Material ..... Frame: Plastic (Flammability: UL 94V-0), Impeller: Plastic (Flammability: UL 94V-1)
- Expected life ..... See the table below. (L10 life: 90% survival rate for continuous operation in free air at 60˚C, rated voltage) Expected life at 40°C is for reference only.
- Motor protection function ..... Locked rotor burnout protection, Reverse polarity protection For details, please refer to p. 608.
- Dielectric strength ..... 50/60 Hz, 500 VAC, for 1 minute (between lead wire conductors and frame)
- Insulation resistance ..... 10 MΩ min. at 500 VDC (between lead wire conductors and frame)
- Sound pressure level (SPL) ..... A-weighted sound pressure level (SPL) at 1 m away from the air inlet.
- Storage temperature ..... -30 to +70˚C (Non-condensing)
- Lead wire ..... ⊕Red ⊖Black Sensor Yellow Control Brown
- Mass ..... 230 g

Specifications

The models listed below **have ribs and a pulse sensor with PWM control.** For models without ribs, append "1" to the end of model numbers.

Model no.	Rated voltage [V]	Operating voltage range [V]	PWM duty cycle* [%]	Rated current [A]	Rated input [W]	Rated speed [min⁻¹]	Max. airflow [m³/min]	Max. airflow [CFM]	Max. static pressure [Pa]	Max. static pressure [inchH₂O]	SPL [dB (A)]	Operating temperature [˚C]	Expected life [h]
9HVB0812P1G001	12	10.8 to 12.6	100	4.8	57.6	18300	4.0	141.3	1600	6.42	75	-20 to +70	40000/60˚C (70000/40˚C)
			20	0.17	2.0	4300	0.94	33.2	105	0.42	40		
9HVB0812P1S001		10.8 to 13.2	100	3.8	45.6	16800	3.7	130	1400	5.62	73		
			20	0.17	2.0	4300	0.94	33.2	105	0.42	40		

PWM frequency is 25 kHz. Models without ratings for 0% PWM duty cycle have zero speed at 0%. When control terminal is open, speed is the same as at 100% duty cycle.

Note: The » mark indicates Short Lead Time Service applicable models. See p. 664 for details.

Airflow - Static Pressure Characteristics / PWM Duty - Speed Characteristics Example

9HVB0812P1G001 With pulse sensor with PWM control

PWM duty cycle

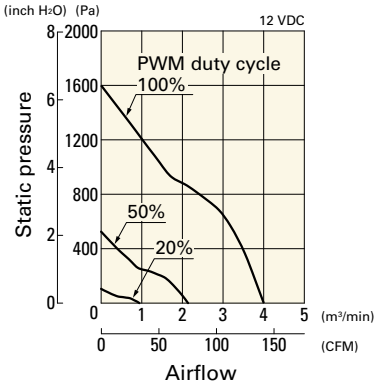

Operating voltage range

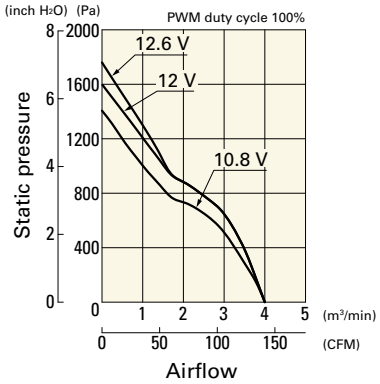

PWM duty - Speed characteristics example

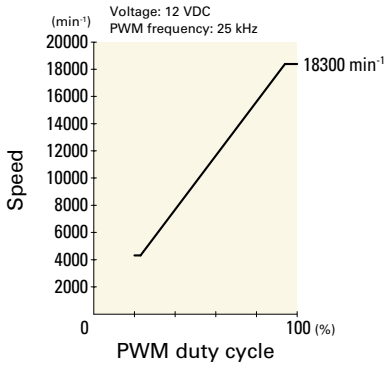

Airflow - Static Pressure Characteristics / PWM Duty - Speed Characteristics Example

9HVB0812P1S001 With pulse sensor with PWM control

PWM duty cycle

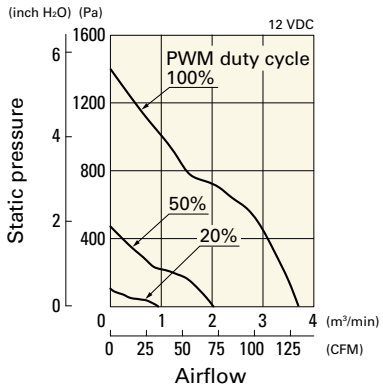

Operating voltage range

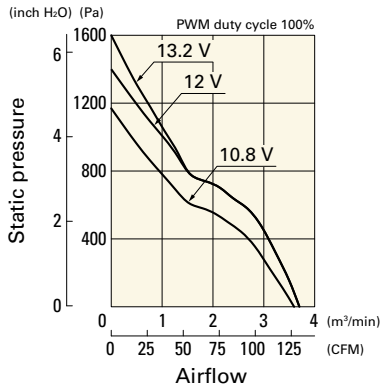

PWM duty - Speed characteristics example

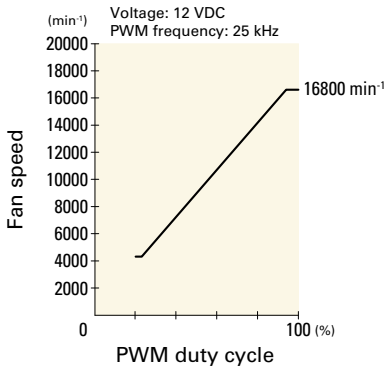

Dimensions (unit: mm) (With ribs)

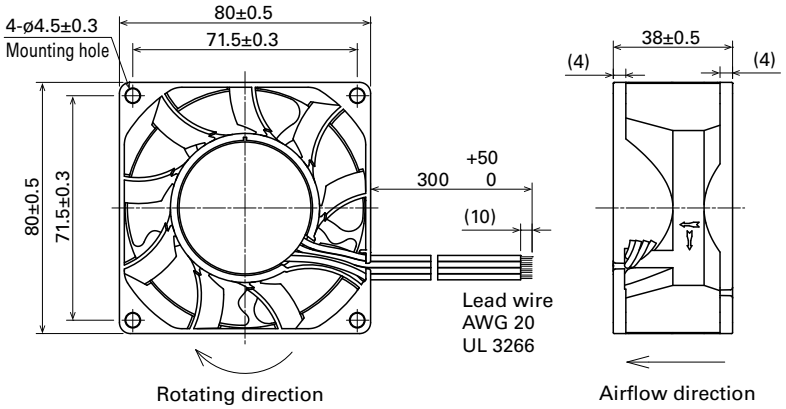

Reference Dimensions of Mounting Holes and Vent Opening (unit: mm)

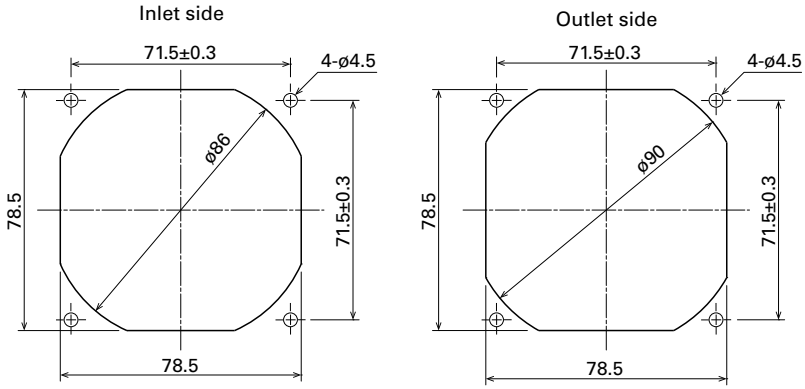

Options

Finger guards page: p. 590

Model no.: 109-049E, 109-049H

Resin finger guards page: p. 597

Model no.: 109-1002G

Resin filter kits page: p. 598

Model no.: 109-1002F13 (13PPI), 109-1002F20 (20PPI),
109-1002F30 (30PPI), 109-1002F40 (40PPI)

DC Fan

80×80×38 mm

San Ace 80 9HVA type

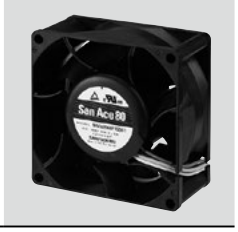

General Specifications

- Material ..... Frame: Plastic (Flammability: UL 94V-0), Impeller: Plastic (Flammability: UL 94V-0)
- Expected life ..... See the table below. (L10 life: 90% survival rate for continuous operation in free air at 60˚C, rated voltage) Expected life at 40°C is for reference only.
- Motor protection function ..... Locked rotor burnout protection, Reverse polarity protection For details, please refer to p. 608.
- Dielectric strength ..... 50/60 Hz, 500 VAC, for 1 minute (between lead wire conductors and frame)
- Insulation resistance ..... 10 MΩ min. at 500 VDC (between lead wire conductors and frame)
- Sound pressure level (SPL) ..... A-weighted sound pressure level (SPL) at 1 m away from the air inlet.
- Storage temperature ..... -30 to +70˚C (Non-condensing)
- Lead wire ..... ⊕Red ⊖Black Sensor Yellow Control Brown
- Mass ..... 220 g

Specifications

The models listed below **have ribs and a pulse sensor with PWM control.** For models without ribs, append "1" to the end of model numbers.

Model no.	Rated voltage [V]	Operating voltage range [V]	PWM duty cycle* [%]	Rated current [A]	Rated input [W]	Rated speed [min⁻¹]	Max. airflow [m³/min]	Max. airflow [CFM]	Max. static pressure [Pa]	Max. static pressure [inchH₂O]	SPL [dB (A)]	Operating temperature [˚C]	Expected life [h]
9HVA0848P1G601	48	36 to 57	100	0.9	43.2	16100	3.75	132	1250	5.0	73	-20 to +70	40000/60˚C (70000/40˚C)
			20	0.07	3.36	4200	0.96	33.9	105	0.42	44		

PWM frequency is 25 kHz. Models without ratings for 0% PWM duty cycle have zero speed at 0%. When control terminal is open, speed is the same as at 100% duty cycle.

Airflow - Static Pressure Characteristics / PWM Duty - Speed Characteristics Example

9HVA0848P1G601 With pulse sensor with PWM control

PWM duty cycle

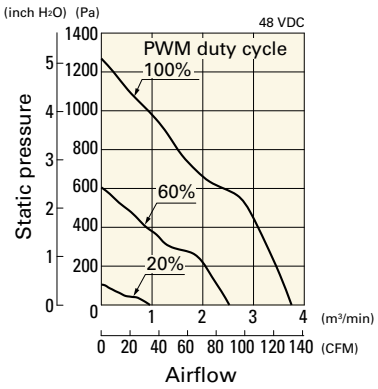

Operating voltage range

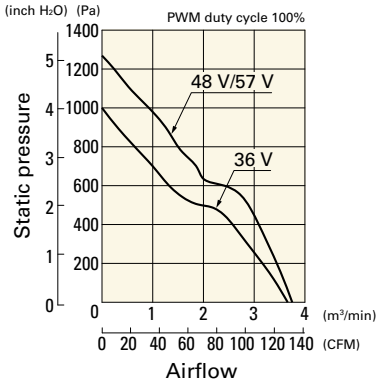

PWM duty - Speed characteristics example

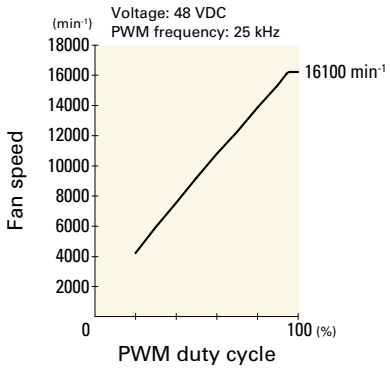

Dimensions (unit: mm) (With ribs)

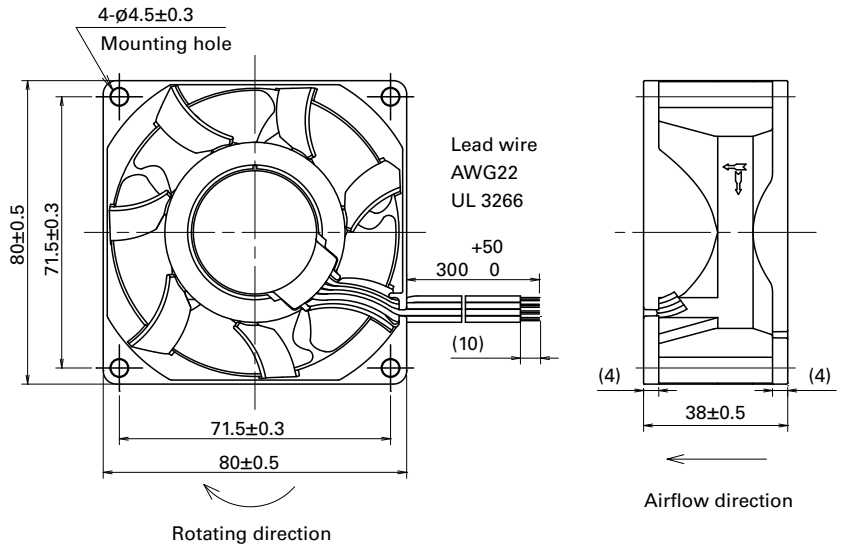

Reference Dimensions of Mounting Holes and Vent Opening (unit: mm)

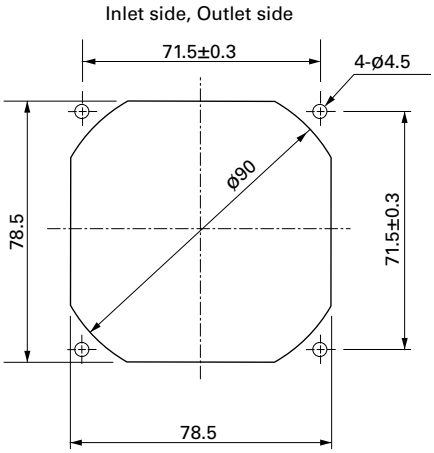

Options

Finger guards page: p. 590

Model no.: 109-049E, 109-049H

Resin filter kits page: p. 598

Model no.: 109-1002F13 (13PPI), 109-1002F20 (20PPI),
109-1002F30 (30PPI), 109-1002F40 (40PPI)

Resin finger guards page: p. 597

Model no.: 109-1002G

DC Fan

80×80×38 mm

San Ace 80 9HV type

General Specifications

- Material ..... Frame: Plastic (Flammability: UL 94V-0), Impeller: Plastic (Flammability: UL 94V-0)
- Expected life ..... See the table below. (L10 life: 90% survival rate for continuous operation in free air at 60˚C, rated voltage) Expected life at 40°C is for reference only.
- Motor protection function ..... Locked rotor burnout protection, Reverse polarity protection For details, please refer to p. 608.
- Dielectric strength ..... 50/60 Hz, 500 VAC, for 1 minute (between lead wire conductors and frame)
- Insulation resistance ..... 10 MΩ min. at 500 VDC (between lead wire conductors and frame)
- Sound pressure level (SPL) ..... A-weighted sound pressure level (SPL) at 1 m away from the air inlet.
- Storage temperature ..... -30 to +70˚C (Non-condensing)
- Lead wire ..... ⊕Red ⊖Black Sensor Yellow Control Brown
- Mass ..... 230 g

Specifications

The models listed below **have ribs and a pulse sensor with PWM control.** For models without ribs, append "1" to the end of model numbers.

Model no.	Rated voltage [V]	Operating voltage range [V]	PWM duty cycle* [%]	Rated current [A]	Rated input [W]	Rated speed [min⁻¹]	Max. airflow [m³/min]	Max. airflow [CFM]	Max. static pressure [Pa]	Max. static pressure [inchH₂O]	SPL [dB (A)]	Operating temperature [˚C]	Expected life [h]
9HV0812P1G601	12	10.8 to 13.2	100	3.4	40.8	14900	3.7	130.7	1000	4.0	69	-20 to +70	40000/60˚C (70000/40˚C)
			0	0.25	3	4400	1.06	37.5	87.2	0.35	40		
9HV0812P1H601			100	3	36	13500	3.35	118	870	3.49	67		
			0	0.12	1.44	2500	0.6	21.1	28.1	0.11	28		
9HV0812P1S601			100	2.1	25.2	12000	2.9	102	780	3.13	63		
			0	0.12	1.44	2500	0.6	21.1	28.1	0.11	28		
9HV0824P1G003	24	21.6 to 26.4	100	1.7	40.8	14900	3.7	130.7	1000	4.0	69		
9HV0848P1G001	48	36 to 57	100	0.85	40.8	14900	3.7	130.7	1000	4.0	69	-10 to +70	
			0	0.13	6.24	4400	1.06	37.5	87.2	0.35	40		

PWM frequency is 25 kHz. Models without ratings for 0% PWM duty cycle have zero speed at 0%. When control terminal is open, speed is the same as at 100% duty cycle.

Note 1: The model number of the ribless model for 9HV0824P1G003 is 9HV0824P1G0011.
Note 2: Sensor and control options are available for selection. Refer to the table on p. 642.
Note 3: The » mark indicates Short Lead Time Service applicable models. See p. 664 for details.

Airflow - Static Pressure Characteristics / PWM Duty - Speed Characteristics Example

9HV0812P1G601 With pulse sensor with PWM control

PWM duty cycle

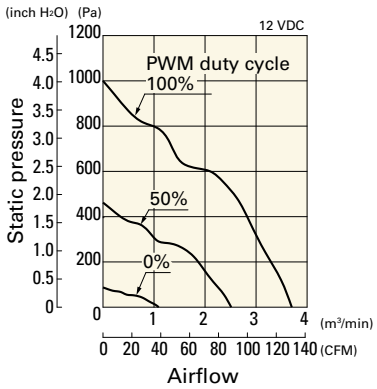

Operating voltage range

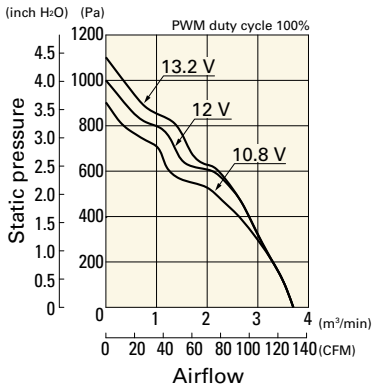

PWM duty - Speed characteristics example

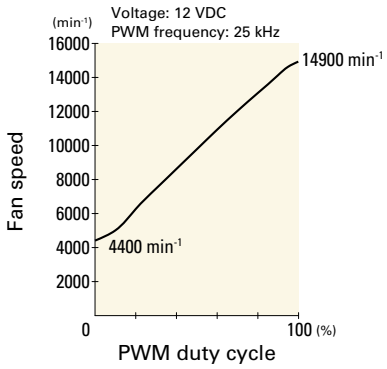

Airflow - Static Pressure Characteristics / PWM Duty - Speed Characteristics Example

9HV0812P1H601 With pulse sensor with PWM control

PWM duty cycle

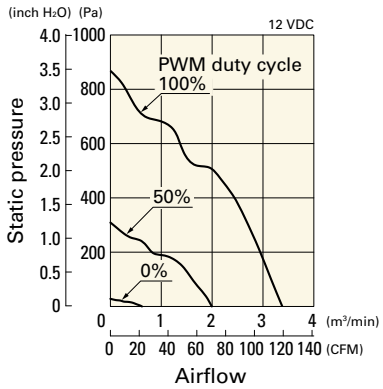

Operating voltage range

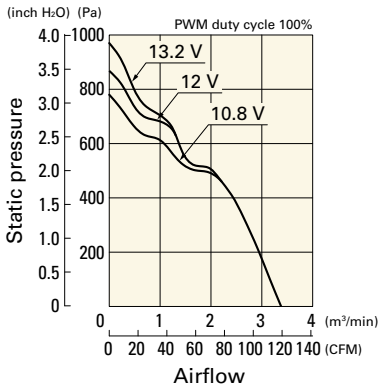

PWM duty - Speed characteristics example

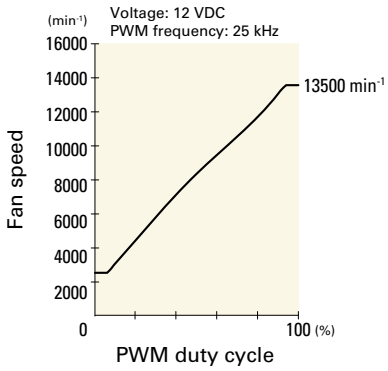

9HV0812P1S601 With pulse sensor with PWM control

PWM duty cycle

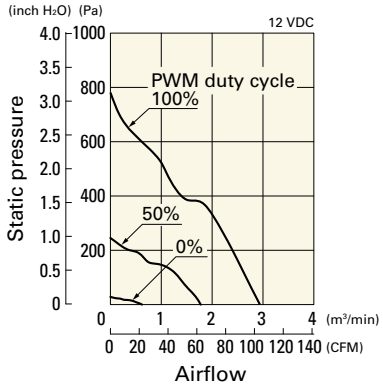

Operating voltage range

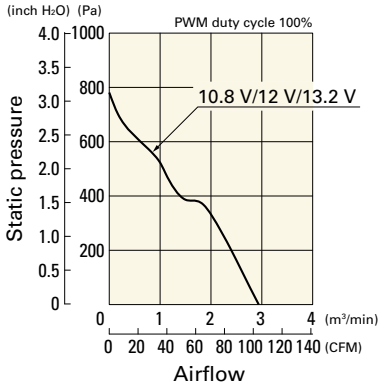

PWM duty - Speed characteristics example

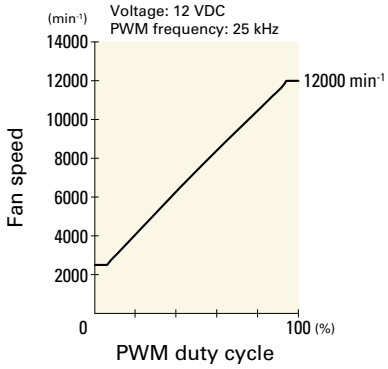

9HV0824P1G003 With pulse sensor with PWM control

PWM duty cycle

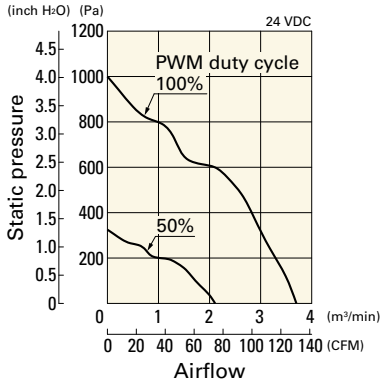

Operating voltage range

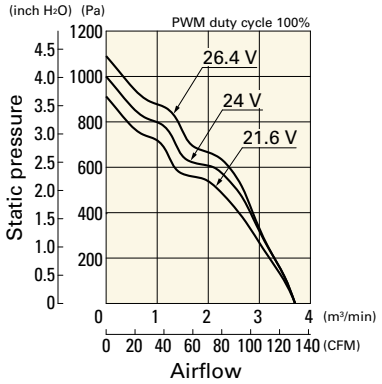

PWM duty - Speed characteristics example

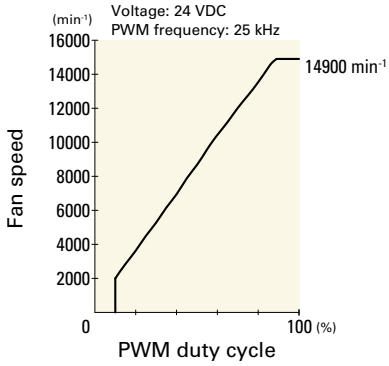

9HV0848P1G001 With pulse sensor with PWM control

PWM duty cycle

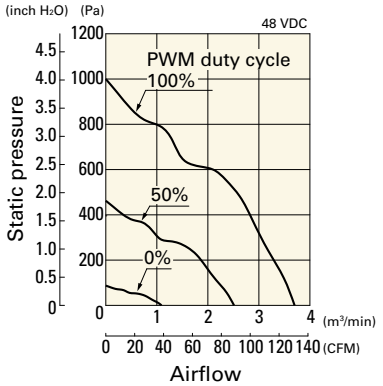

Operating voltage range

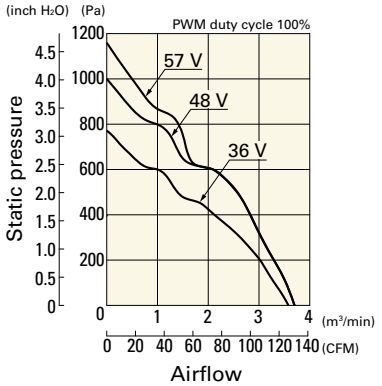

PWM duty - Speed characteristics example

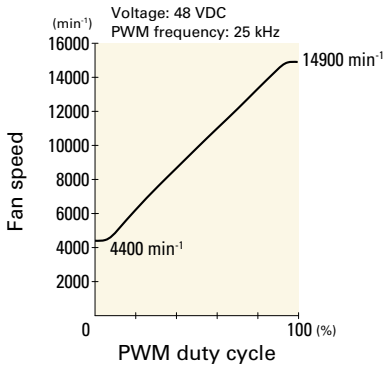

Dimensions (unit: mm) (With ribs)

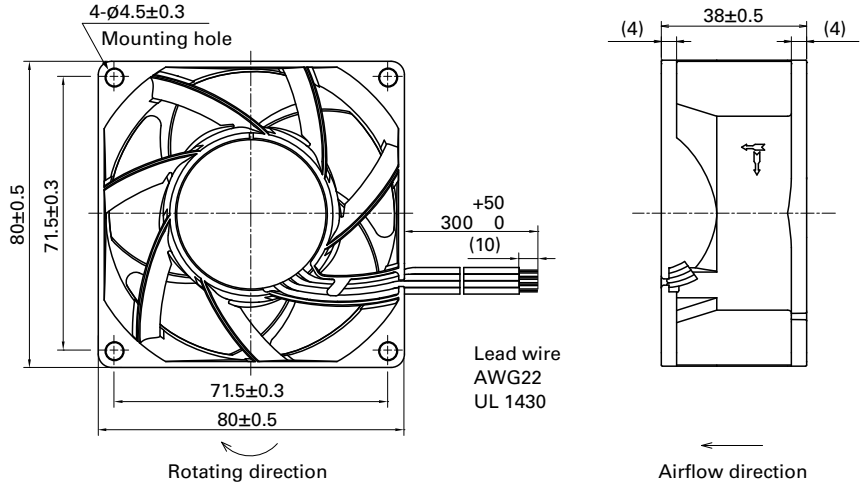

Reference Dimensions of Mounting Holes and Vent Opening (unit: mm)

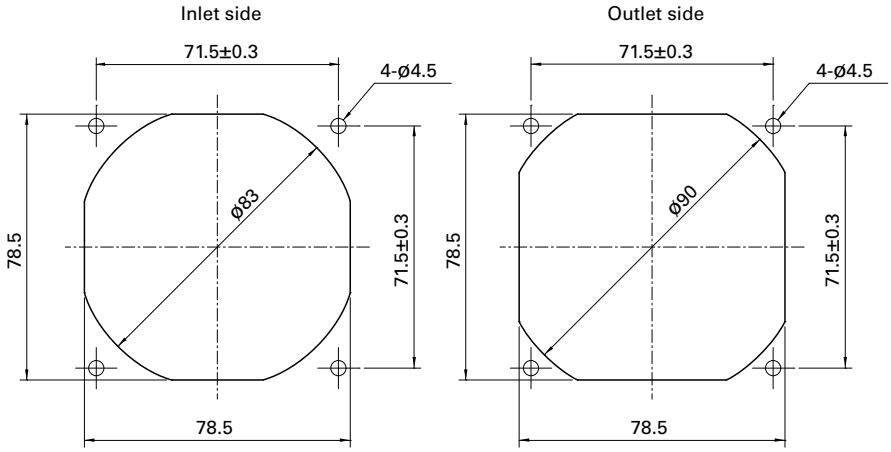

Options

Finger guards page: p. 590

Model no.: 109-049E, 109-049H

Resin finger guards page: p. 597

Model no.: 109-1002G

Resin filter kits page: p. 598

Model no.: 109-1002F13 (13PPI), 109-1002F20 (20PPI),
109-1002F30 (30PPI), 109-1002F40 (40PPI)

80×80×38 mm

San Ace 80 9GA type Low Power Consumption Fan

General Specifications

- Material ..... Frame: Plastic (Flammability: UL 94V-0), Impeller: Plastic (Flammability: UL 94V-0)
- Expected life ..... See the table below. (L10 life: 90% survival rate for continuous operation in free air at 60˚C, rated voltage) Expected life at 40°C is for reference only.
- Motor protection function ..... Locked rotor burnout protection, Reverse polarity protection For details, please refer to p. 608.
- Dielectric strength ..... 50/60 Hz, 500 VAC, for 1 minute (between lead wire conductors and frame)
- Insulation resistance ..... 10 MΩ min. at 500 VDC (between lead wire conductors and frame)
- Sound pressure level (SPL) ..... A-weighted sound pressure level (SPL) at 1 m away from the air inlet.
- Storage temperature ..... -30 to +70˚C (Non-condensing)
- Lead wire ..... ⊕Red ⊖Black Sensor Yellow Control Brown
- Mass ..... 160 g

Specifications

The models listed below **have ribs and a pulse sensor with PWM control.** For models without ribs, append "1" to the end of model numbers.

Model no.	Rated voltage [V]	Operating voltage range [V]	PWM duty cycle* [%]	Rated current [A]	Rated input [W]	Rated speed [min⁻¹]	Max. airflow [m³/min]	Max. airflow [CFM]	Max. static pressure [Pa]	Max. static pressure [inchH₂O]	SPL [dB (A)]	Operating temperature [˚C]	Expected life [h]
9GA0812P1G61	12	10.8 to 13.2	100	1.2	14.4	10500	2.85	100.6	480	1.93	60	-20 to +70	40000/60˚C (70000/40˚C)
			0	0.07	0.48	2000	0.51	18.0	28.7	0.11	21		
9GA0812P1S61			100	0.94	11.28	9550	2.6	91.8	480	1.93	59		
			0	0.1	1.2	2900	0.74	26.1	60	0.24	27		
9GA0812P1H61			100	0.6	7.2	8250	2.25	79.4	380	1.53	55		
			0	0.08	0.96	2500	0.64	22.6	45	0.18	24		
9GA0824P1S61	24	20.4 to 27.6	100	0.47	11.28	9550	2.6	91.8	480	1.93	59		
			0	0.06	1.44	2900	0.74	26.1	60	0.24	27		
9GA0824P1H61			100	0.3	7.2	8250	2.25	79.4	380	1.53	55		
			0	0.05	1.2	2500	0.64	22.6	45	0.18	24		
9GA0848P1S61	48	40.8 to 55.2	100	0.25	12	9550	2.6	91.8	480	1.93	59		
			0	0.04	1.92	2900	0.74	26.1	60	0.24	27		

PWM frequency is 25 kHz. Models without ratings for 0% PWM duty cycle have zero speed at 0%. When control terminal is open, speed is the same as at 100% duty cycle.

Note 1: Sensor and control options are available for selection. Refer to the table on pp. 639 to 640.
Note 2: The » mark indicates Short LeadTime Service applicable models. See p. 664 for details.

Airflow - Static Pressure Characteristics / PWM Duty - Speed Characteristics Example

9GA0812P1G61 With pulse sensor with PWM control

PWM duty cycle

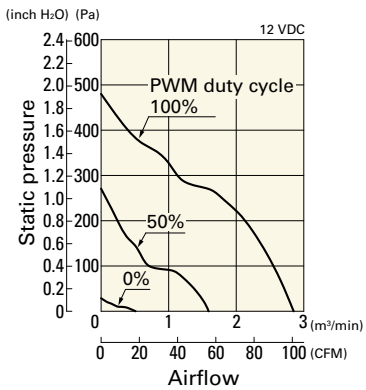

Operating voltage range

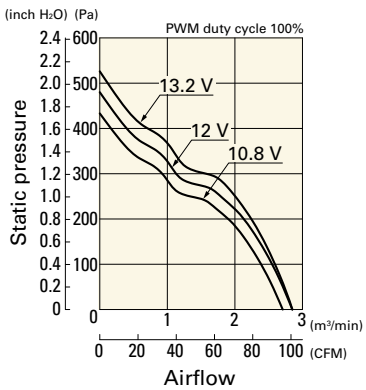

PWM duty - Speed characteristics example

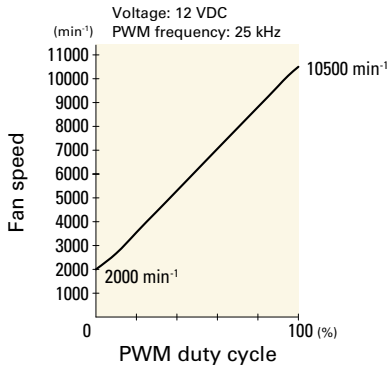

Airflow - Static Pressure Characteristics / PWM Duty - Speed Characteristics Example

9GA0812P1S61 With pulse sensor with PWM control

PWM duty cycle

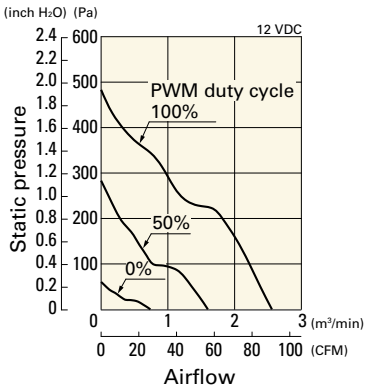

Operating voltage range

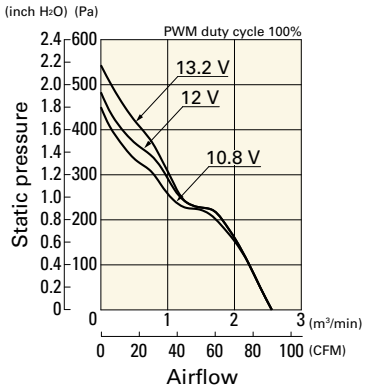

PWM duty - Speed characteristics example

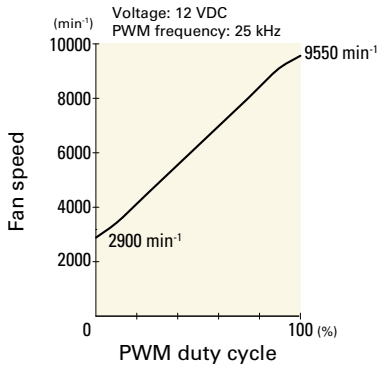

9GA0812P1H61 With pulse sensor with PWM control

PWM duty cycle

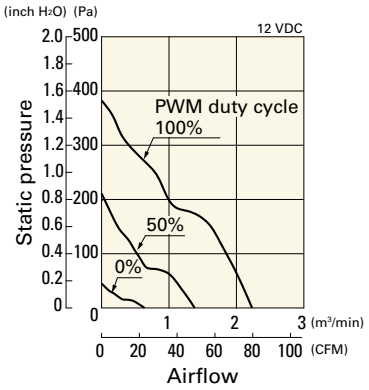

Operating voltage range

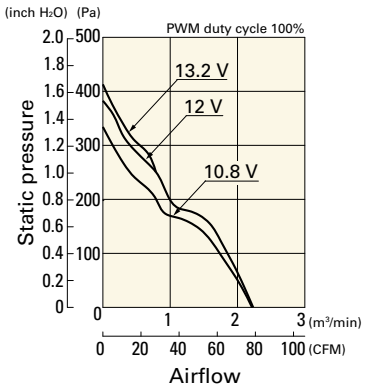

PWM duty - Speed characteristics example

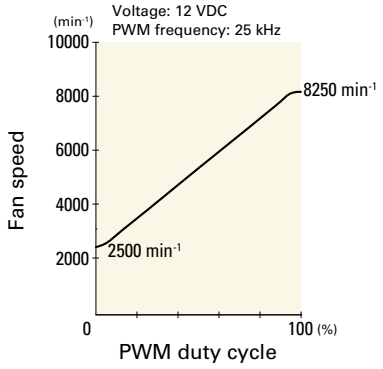

9GA0824P1S61 With pulse sensor with PWM control

PWM duty cycle

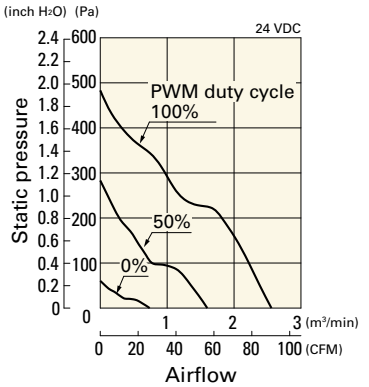

Operating voltage range

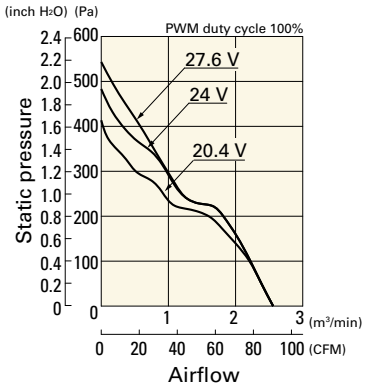

PWM duty - Speed characteristics example

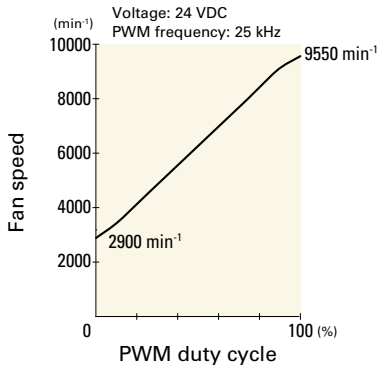

9GA0824P1H61 With pulse sensor with PWM control

PWM duty cycle

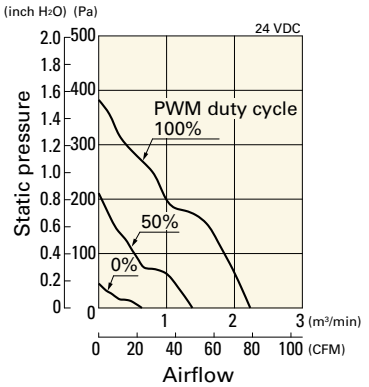

Operating voltage range

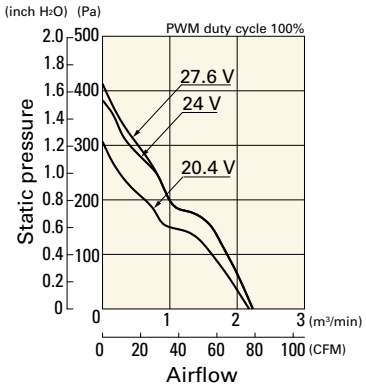

PWM duty - Speed characteristics example

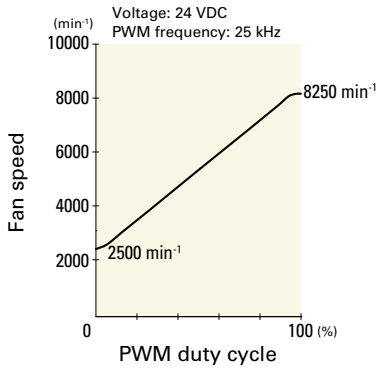

Airflow - Static Pressure Characteristics / PWM Duty - Speed Characteristics Example

9GA0848P1S61 With pulse sensor with PWM control

PWM duty cycle

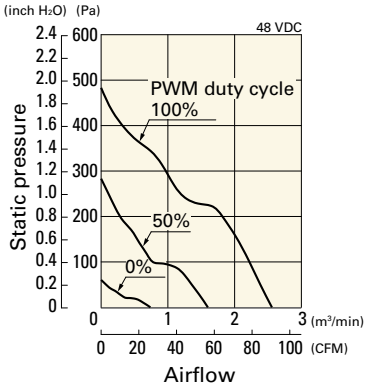

Operating voltage range

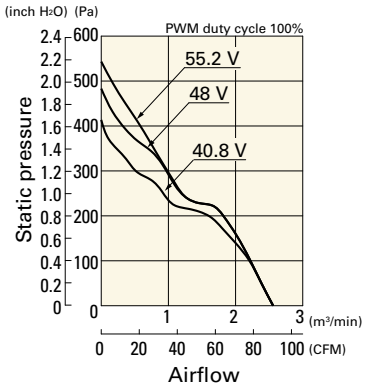

PWM duty - Speed characteristics example

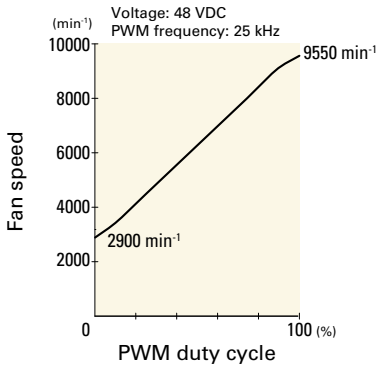

Dimensions (unit: mm) (With ribs)

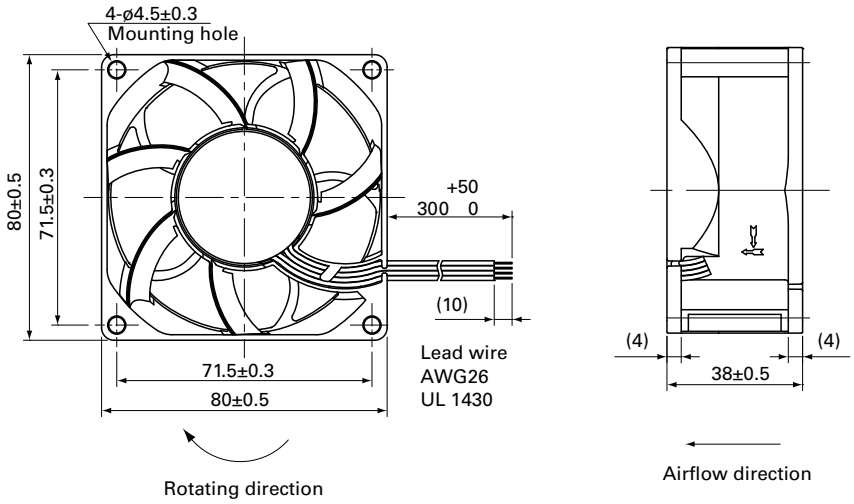

Reference Dimensions of Mounting Holes and Vent Opening (unit: mm)

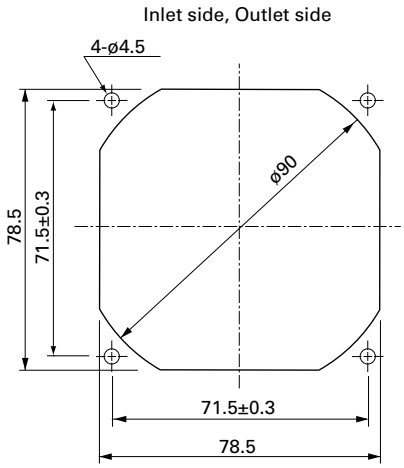

Options

Finger guards page: p. 590

Model no.: 109-049E, 109-049H

Resin finger guards page: p. 597

Model no.: 109-1002G

Resin filter kits page: p. 598

Model no.: 109-1002F13 (13PPI), 109-1002F20 (20PPI),
109-1002F30 (30PPI), 109-1002F40 (40PPI)

DC Fan

80×80×38 mm

San Ace 80 9GV type

General Specifications

- Material ..... Frame: Plastic (Flammability: UL 94V-0), Impeller: Plastic (Flammability: UL 94V-1)
- Expected life ..... See the table below. (L10 life: 90% survival rate for continuous operation in free air at 60˚C, rated voltage) Expected life at 40°C is for reference only.
- Motor protection function ..... Locked rotor burnout protection, Reverse polarity protection For details, please refer to p. 608.
- Dielectric strength ..... 50/60 Hz, 500 VAC, for 1 minute (between lead wire conductors and frame)
- Insulation resistance ..... 10 MΩ min. at 500 VDC (between lead wire conductors and frame)
- Sound pressure level (SPL) ..... A-weighted sound pressure level (SPL) at 1 m away from the air inlet.
- Storage temperature ..... -30 to +70˚C (Non-condensing)
- Lead wire ..... ⊕Red ⊖Black Sensor Yellow Control Brown
- Mass ..... 220 g

Specifications

The models listed below **have ribs and a pulse sensor with PWM control.** For models without ribs, append "1" to the end of model numbers.

Model no.	Rated voltage [V]	Operating voltage range [V]	PWM duty cycle* [%]	Rated current [A]	Rated input [W]	Rated speed [min⁻¹]	Max. airflow [m³/min]	Max. airflow [CFM]	Max. static pressure [Pa]	Max. static pressure [inchH₂O]	SPL [dB (A)]	Operating temperature [˚C]	Expected life [h]
9GV0812P1G03	12	10.8 to 13.2	100	3.8	45.6	10200	3.9	138.0	490.0	1.97	65	-20 to +70	40000/60˚C (70000/40˚C)
			0	0.32	3.84	3000	1.15	40.6	42.4	0.17	34		
9GV0812P1H03			100	3.0	36.0	9700	3.7	131.0	440.0	1.77	63		
			0	0.2	2.4	2900	1.11	39.2	39.0	0.16	34		
9GV0824P1G03	24	20.4 to 27.6	100	1.6	38.4	10200	3.9	138.0	490.0	1.97	65		
			0	0.3	7.2	4700	1.79	63.2	104.0	0.41	44		
9GV0848P1G03	48	40.8 to 55.2	100	0.84	40.32	10200	3.9	138.0	490.0	1.97	65		
			0	0.15	7.2	4700	1.79	63.2	104.0	0.41	44		

PWM frequency is 25 kHz. Models without ratings for 0% PWM duty cycle have zero speed at 0%. When control terminal is open, speed is the same as at 100% duty cycle.

Note: Sensor and control options are available for selection. Refer to the table on p. 641.

Airflow - Static Pressure Characteristics / PWM Duty - Speed Characteristics Example

9GV0812P1G03 With pulse sensor with PWM control

PWM duty cycle

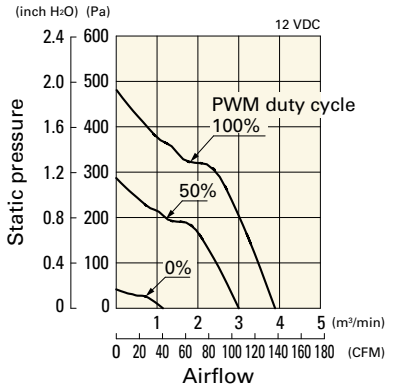

Operating voltage range

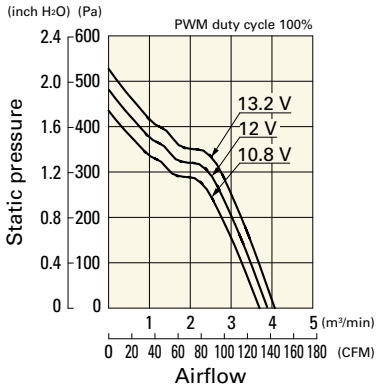

PWM duty - Speed characteristics example

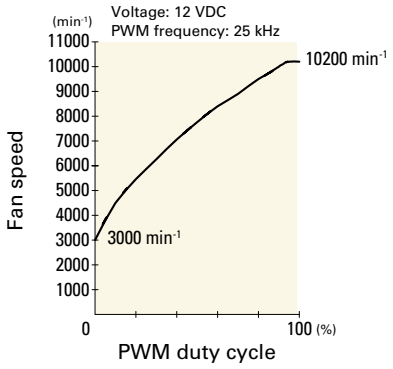

Airflow - Static Pressure Characteristics / PWM Duty - Speed Characteristics Example

9GV0812P1H03 With pulse sensor with PWM control

PWM duty cycle

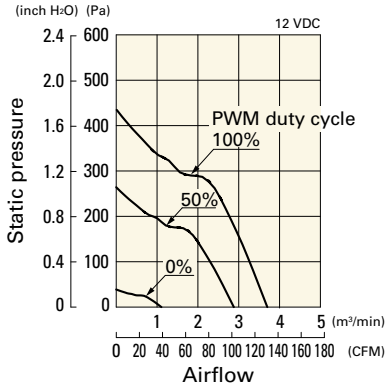

Operating voltage range

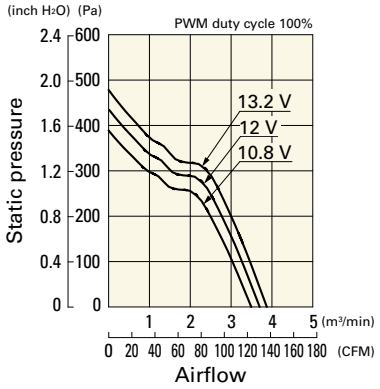

PWM duty - Speed characteristics example

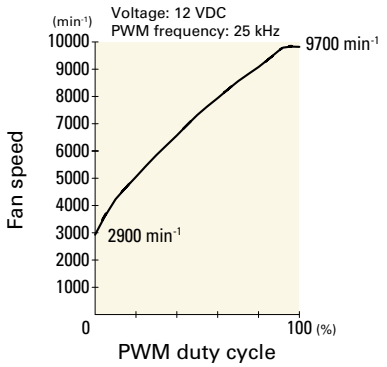

9GV0824P1G03 With pulse sensor with PWM control

PWM duty cycle

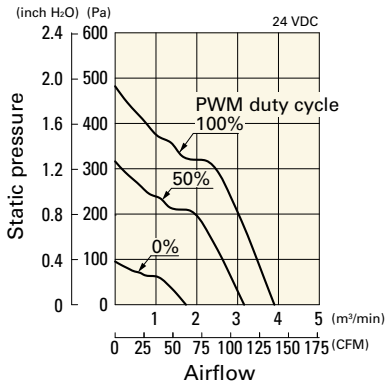

Operating voltage range

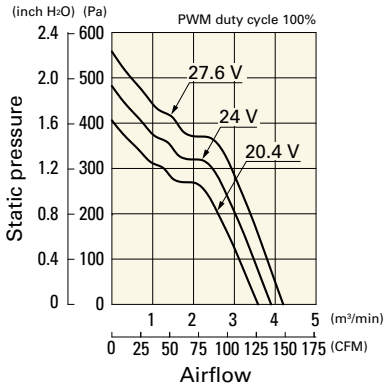

PWM duty - Speed characteristics example

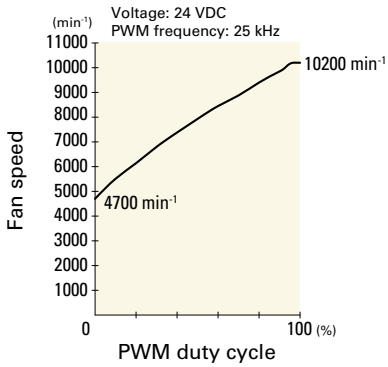

9GV0848P1G03 With pulse sensor with PWM control

PWM duty cycle

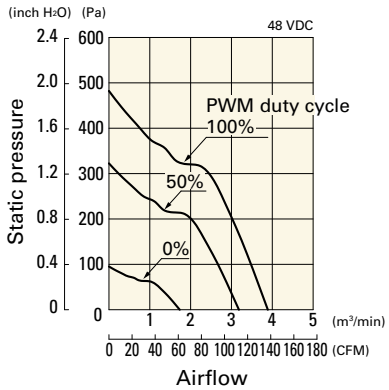

Operating voltage range

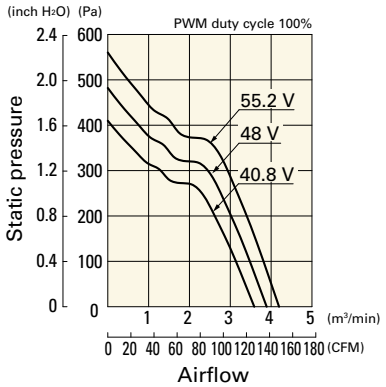

PWM duty - Speed characteristics example

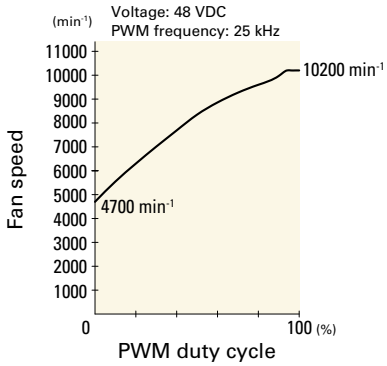

Dimensions (unit: mm) (With ribs)

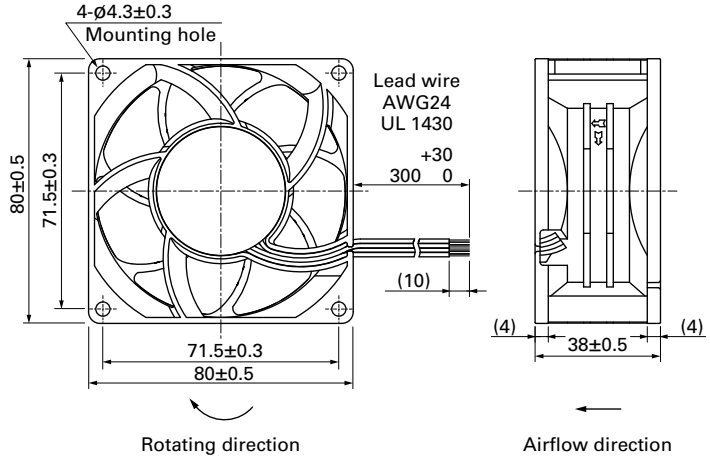

Reference Dimensions of Mounting Holes and Vent Opening (unit: mm)

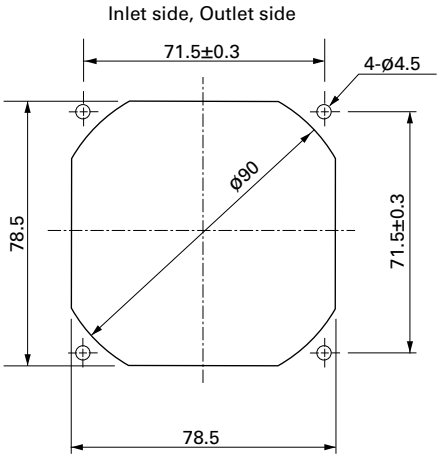

Options

Finger guards page: p. 590

Model no.: 109-049E, 109-049H

Resin filter kits page: p. 598

Model no.: 109-1002F13 (13PPI), 109-1002F20 (20PPI),
109-1002F30 (30PPI), 109-1002F40 (40PPI)

Resin finger guards page: p. 597

Model no.: 109-1002G

80×80×38 mm

San Ace 80 9RA type

General Specifications

- Material ..... Frame: Plastic (Flammability: UL 94V-0), Impeller: Plastic (Flammability: UL 94V-1)
- Expected life ..... See the table below. (L10 life: 90% survival rate for continuous operation in free air at 60˚C, rated voltage) Expected life at 40°C is for reference only.
- Motor protection function ..... Locked rotor burnout protection, Reverse polarity protection For details, please refer to p. 608.
- Dielectric strength ..... 50/60 Hz, 500 VAC, for 1 minute (between lead wire conductors and frame)
- Insulation resistance ..... 10 MΩ min. at 500 VDC (between lead wire conductors and frame)
- Sound pressure level (SPL) ..... A-weighted sound pressure level (SPL) at 1 m away from the air inlet.
- Storage temperature ..... -30 to +70˚C (Non-condensing)
- Lead wire ..... ⊕Red ⊖Black Sensor Yellow Control Brown (For models without PWM control, there is no speed control wiring.)
- Mass ..... 170 g

Specifications

The models listed below **have ribs and a pulse sensor with PWM control.** For models without ribs, append "1" to the end of model numbers.

Model no.	Rated voltage [V]	Operating voltage range [V]	PWM duty cycle* [%]	Rated current [A]	Rated input [W]	Rated speed [min⁻¹]	Max. airflow [m³/min]	Max. airflow [CFM]	Max. static pressure [Pa]	Max. static pressure [inchH₂O]	SPL [dB (A)]	Operating temperature [˚C]	Expected life [h]
9RA0812P1K001	12	10.8 to 13.2	100	1.52	18.24	8250	2.96	104.5	307	1.23	53	-20 to +70	40000/60˚C (70000/40˚C)
			20	0.13	1.56	2500	0.90	31.8	27.7	0.11	21		
9RA0812P1G001			100	0.82	9.84	6750	2.42	85.5	206	0.83	48		
			20	0.08	0.96	1800	0.65	22.9	14.6	0.06	15		
9RA0812P1H001			100	0.66	7.92	6100	2.19	77.3	168	0.67	46		
			20	0.08	0.96	1500	0.54	19.0	10.2	0.04	13		
9RA0824P1G001	24	21.6 to 26.4	100	0.41	9.84	6750	2.42	85.5	206	0.83	48		
			20	0.08	1.92	2800	1.00	35.3	35.4	0.14	24		
9RA0848P1G001	48	43.2 to 52.8	100	0.22	10.56	6750	2.42	85.5	206	0.83	48		
			20	0.05	2.40	3000	1.07	37.8	40.7	0.16	26		

PWM frequency is 25 kHz. Models without ratings for 0% PWM duty cycle have zero speed at 0%. When control terminal is open, speed is the same as at 100% duty cycle.

The models listed below **have ribs and a pulse sensor.** For models without ribs, append "1" to the end of model numbers.

Model no.	Rated voltage [V]	Operating voltage range [V]	Rated current [A]	Rated input [W]	Rated speed [min⁻¹]	Max. airflow [m³/min]	Max. airflow [CFM]	Max. static pressure [Pa]	Max. static pressure [inchH₂O]	SPL [dB (A)]	Operating temperature [˚C]	Expected life [h]
9RA0812K1001	12	7 to 13.2	1.52	18.24	8250	2.96	104.5	307	1.23	53	-20 to +70	40000/60˚C (70000/40˚C)
9RA0812G1001		7 to 13.8	0.82	9.84	6750	2.42	85.5	206	0.83	48		
9RA0812H1001			0.66	7.92	6100	2.19	77.3	168	0.67	46		
9RA0824G1001	24	14 to 27.6	0.41	9.84	6750	2.42	85.5	206	0.83	48		
9RA0824H1001			0.33	7.92	6100	2.19	77.3	168	0.67	46		
9RA0848G1001	48	36 to 55.2	0.22	10.56	6750	2.42	85.5	206	0.83	48		
9RA0848H1001			0.18	8.64	6100	2.19	77.3	168	0.67	46		

Note 1: Sensor and control options are available for selection. Refer to the table on pp. 645 to 646.
Note 2: The » mark indicates Short LeadTime Service applicable models. See p. 664 for details.

Airflow - Static Pressure Characteristics / PWM Duty - Speed Characteristics Example

9RA0812P1K001 With pulse sensor with PWM control

PWM duty cycle

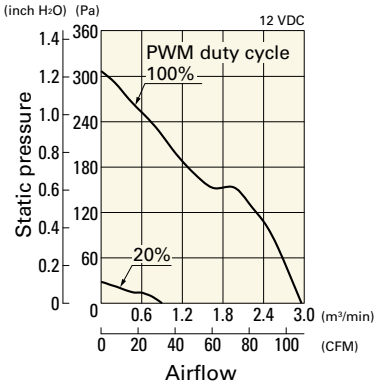

Operating voltage range

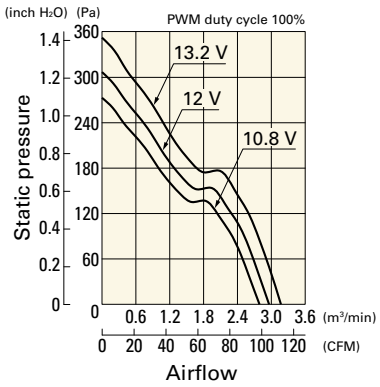

PWM duty - Speed characteristics example

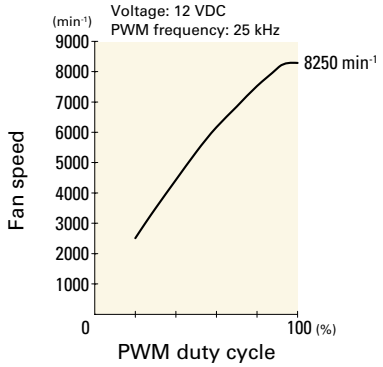

9RA0812P1G001 With pulse sensor with PWM control

PWM duty cycle

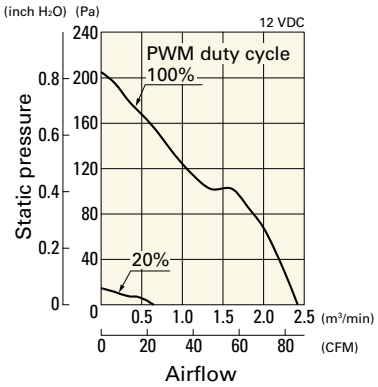

Operating voltage range

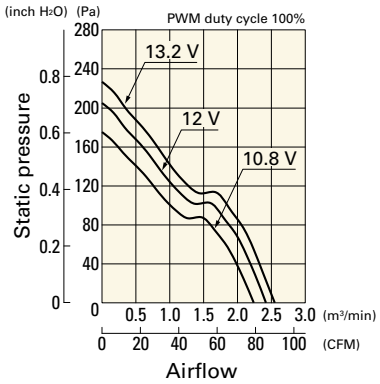

PWM duty - Speed characteristics example

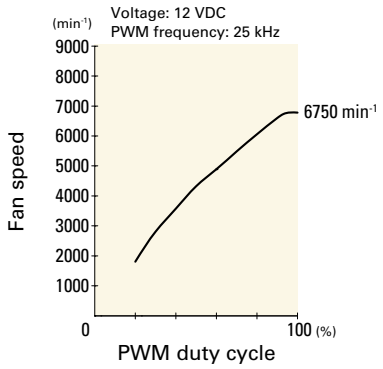

9RA0812P1H001 With pulse sensor with PWM control

PWM duty cycle

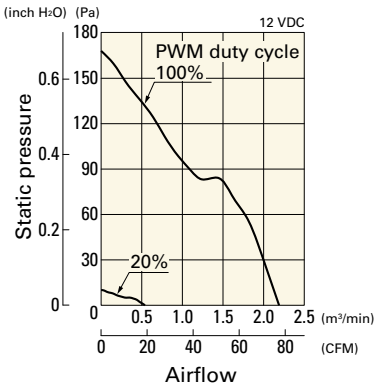

Operating voltage range

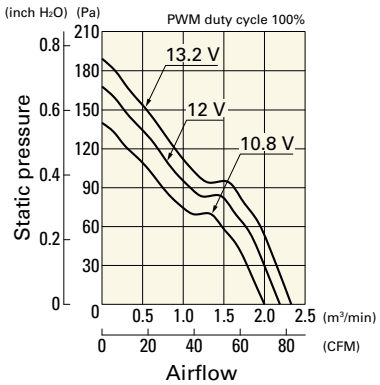

PWM duty - Speed characteristics example

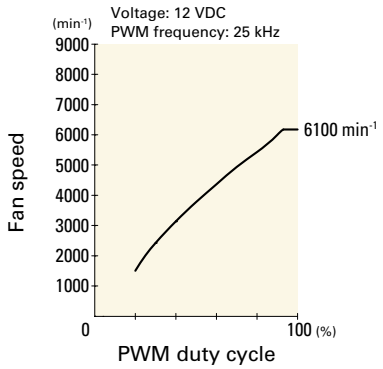

9RA0824P1G001 With pulse sensor with PWM control

PWM duty cycle

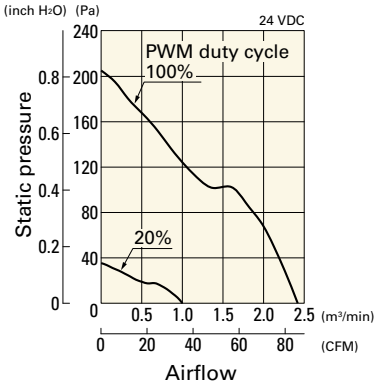

Operating voltage range

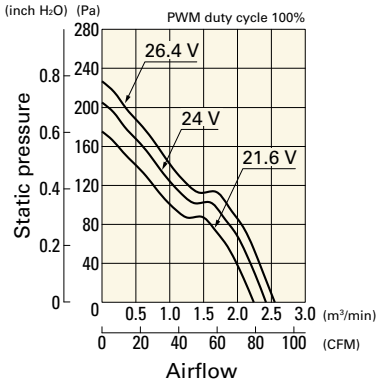

PWM duty - Speed characteristics example

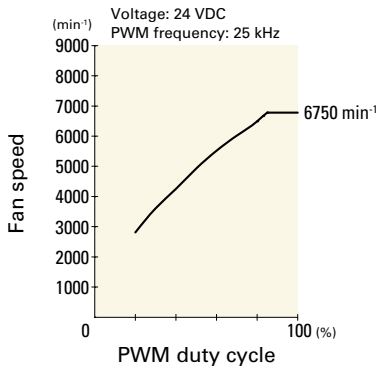

Airflow - Static Pressure Characteristics / PWM Duty - Speed Characteristics Example

9RA0848P1G001 With pulse sensor with PWM control

PWM duty cycle

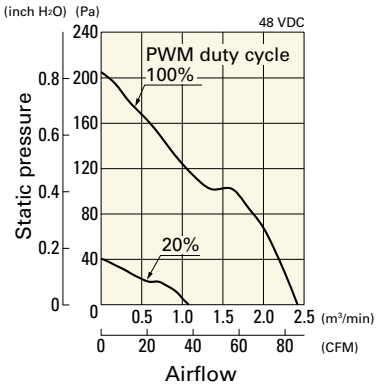

Operating voltage range

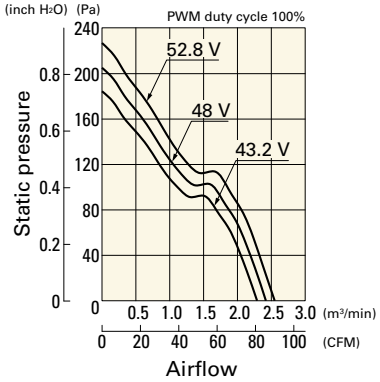

PWM duty - Speed characteristics example

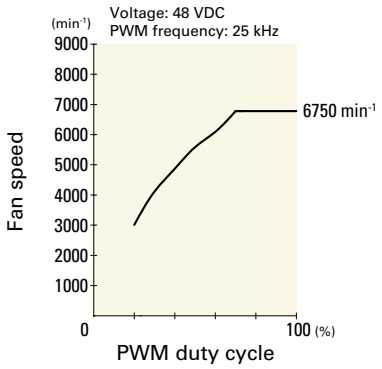

Airflow - Static Pressure Characteristics

9RA0812K1001 With pulse sensor

Operating voltage range

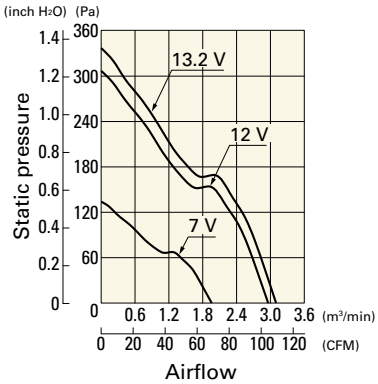

9RA0812G1001 With pulse sensor

Operating voltage range

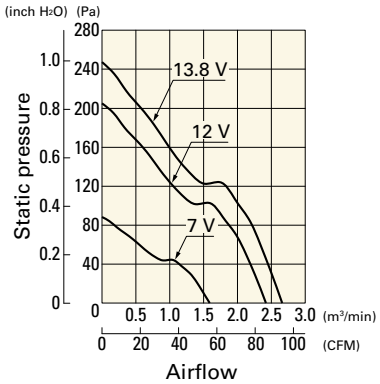

9RA0812H1001 With pulse sensor

Operating voltage range

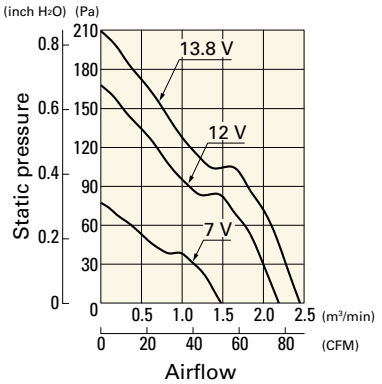

9RA0824G1001 With pulse sensor

Operating voltage range

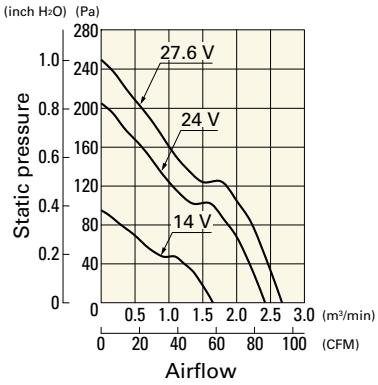

9RA0824H1001 With pulse sensor

Operating voltage range

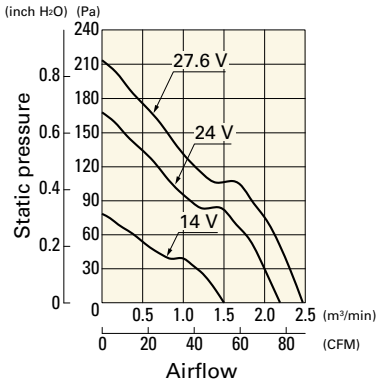

9RA0848G1001 With pulse sensor

Operating voltage range

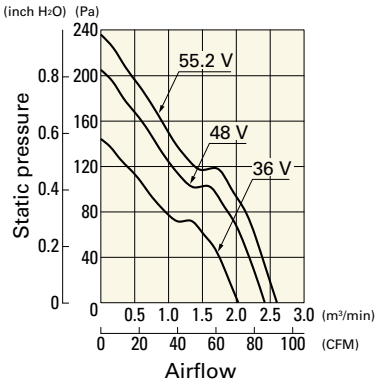

Airflow - Static Pressure Characteristics

9RA0848H1001 With pulse sensor

Operating voltage range

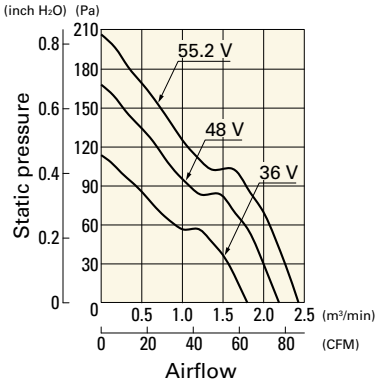

Dimensions (unit: mm) (Ribbed frame with pulse sensor with PWM control)

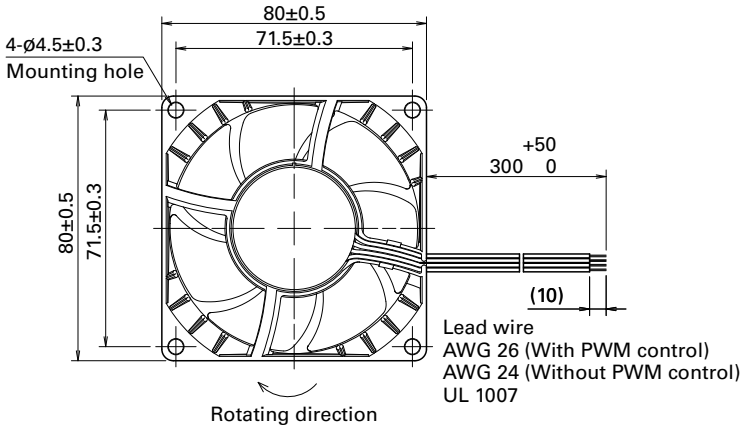

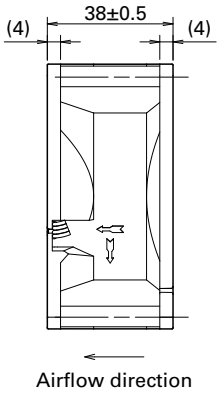

Reference Dimensions of Mounting Holes and Vent Opening (unit: mm)

Inlet side, Outlet side

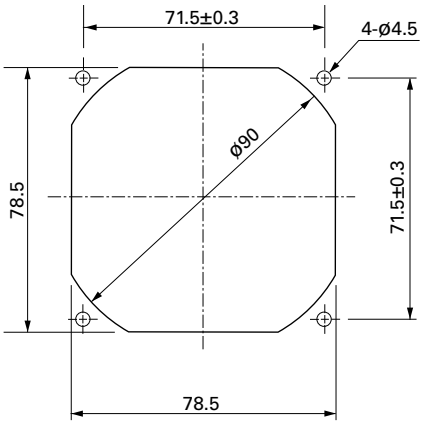

Options

Finger guards page: p. 590

Model no.: 109-049E, 109-049H

Resin finger guards page: p. 597

Model no.: 109-1002G

Resin filter kits page: p. 598

Model no.: 109-1002F13 (13PPI), 109-1002F20 (20PPI),
109-1002F30 (30PPI), 109-1002F40 (40PPI)

92×92×25 mm

San Ace 92 9HV type

General Specifications

- Material ..... Frame: Plastic (Flammability: UL 94V-0), Impeller: Plastic (Flammability: UL 94V-1)
- Expected life ..... See the table below. (L10 life: 90% survival rate for continuous operation in free air at 60˚C, rated voltage) Expected life at 40°C is for reference only.
- Motor protection function ..... Locked rotor burnout protection, Reverse polarity protection For details, please refer to p. 608.
- Dielectric strength ..... 50/60 Hz, 500 VAC, for 1 minute (between lead wire conductors and frame)
- Insulation resistance ..... 10 MΩ min. at 500 VDC (between lead wire conductors and frame)
- Sound pressure level (SPL) ..... A-weighted sound pressure level (SPL) at 1 m away from the air inlet.
- Storage temperature ..... -30 to +70˚C (Non-condensing)
- Lead wire ..... ⊕Red ⊖Black Sensor Yellow Control Brown
- Mass ..... 150 g

Specifications

The models listed below **have ribs and a pulse sensor with PWM control.** For models without ribs, append "1" to the end of model numbers.

Model no.	Rated voltage [V]	Operating voltage range [V]	PWM duty cycle* [%]	Rated current [A]	Rated input [W]	Rated speed [min⁻¹]	Max. airflow [m³/min]	Max. airflow [CFM]	Max. static pressure [Pa]	Max. static pressure [inchH₂O]	SPL [dB (A)]	Operating temperature [˚C]	Expected life [h]
9HV0912P4G001	12	10.2 to 13.8	100	1.23	14.76	7350	3.35	118	280	1.12	56	-20 to +70	40000/60˚C (70000/40˚C)
			20	0.12	1.44	2200	1.0	35.3	25	0.1	26		
9HV0912P4H001			100	0.71	8.52	6050	2.75	97.1	190	0.76	52		
			20	0.07	0.84	1700	0.77	27.2	15	0.06	20		
9HV0924P4G001	24	20.4 to 27.6	100	0.61	14.64	7350	3.35	118	280	1.12	56		
			20	0.06	1.44	2200	1.0	35.3	25	0.1	26		
9HV0924P4H001			100	0.38	9.12	6050	2.75	97.1	190	0.76	52		
			20	0.05	1.2	1700	0.77	27.2	15	0.06	20		

PWM frequency is 25 kHz. Models without ratings for 0% PWM duty cycle have zero speed at 0%. When control terminal is open, speed is the same as at 100% duty cycle.

Note 1: Sensor and control options are available for selection. Refer to the table on p. 642.
Note 2: The » mark indicates Short LeadTime Service applicable models. See p. 664 for details.

Airflow - Static Pressure Characteristics / PWM Duty - Speed Characteristics Example

9HV0912P4G001 With pulse sensor with PWM control

PWM duty cycle

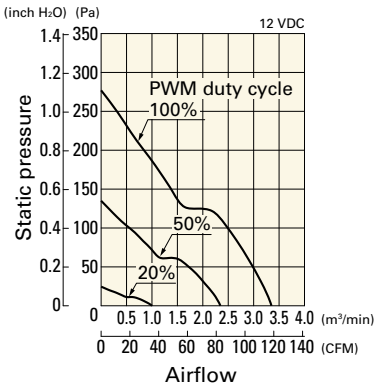

Operating voltage range

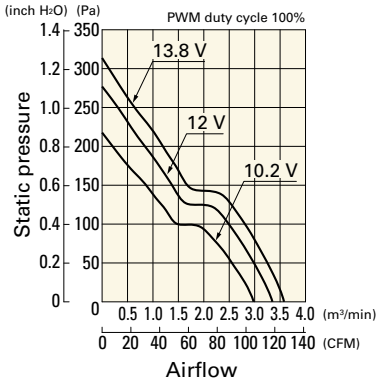

PWM duty - Speed characteristics example

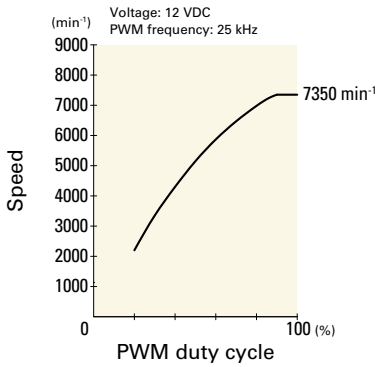

Airflow - Static Pressure Characteristics / PWM Duty - Speed Characteristics Example

9HV0912P4H001 With pulse sensor with PWM control

PWM duty cycle

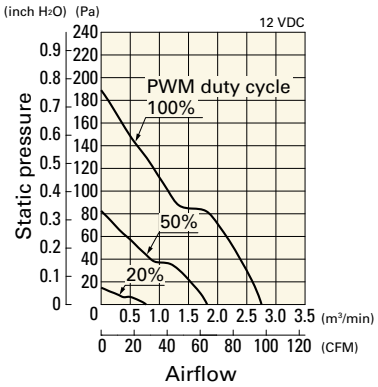

Operating voltage range

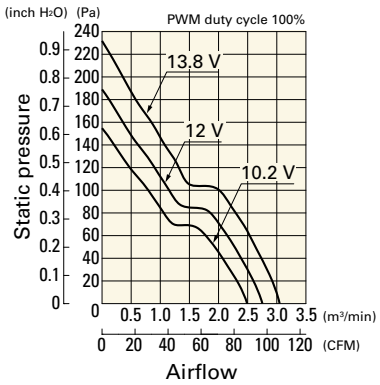

PWM duty - Speed characteristics example

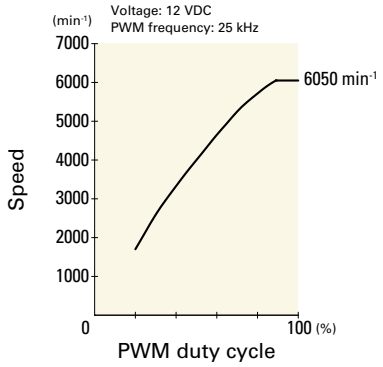

9HV0924P4G001 With pulse sensor with PWM control

PWM duty cycle

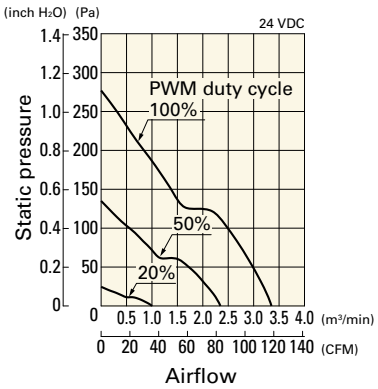

Operating voltage range

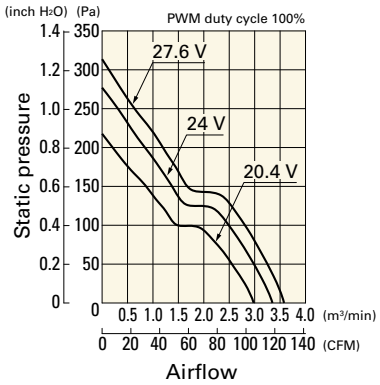

PWM duty - Speed characteristics example

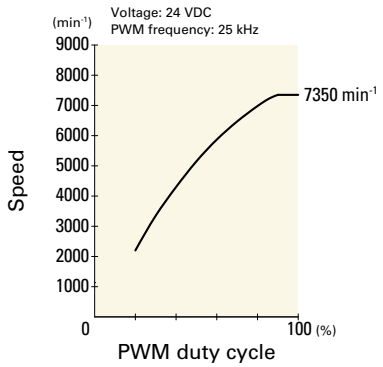

9HV0924P4H001 With pulse sensor with PWM control

PWM duty cycle

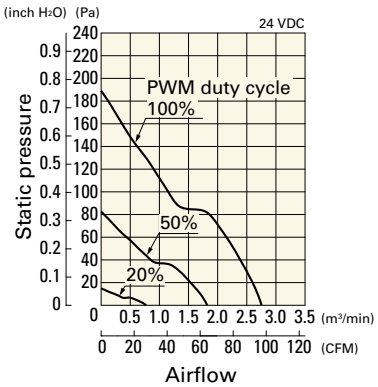

Operating voltage range

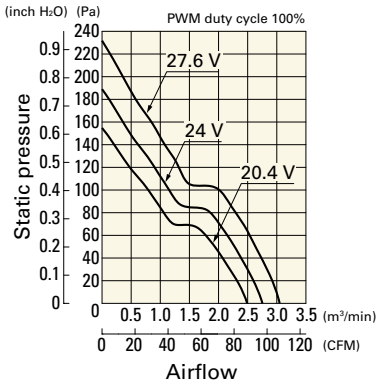

PWM duty - Speed characteristics example

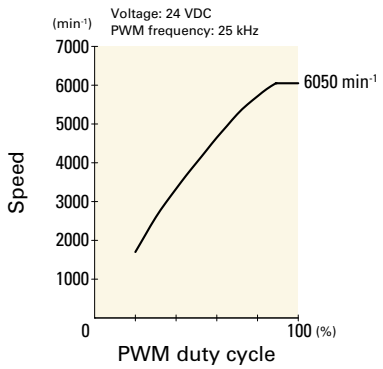

Dimensions (unit: mm) (With ribs)

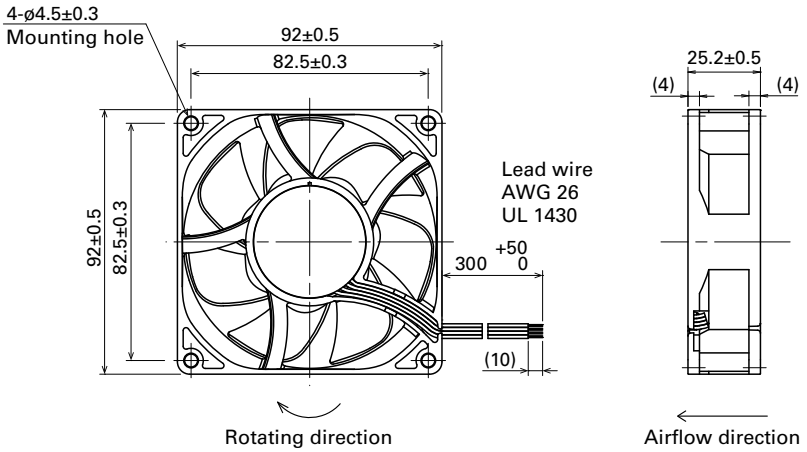

Reference Dimensions of Mounting Holes and Vent Opening (unit: mm)

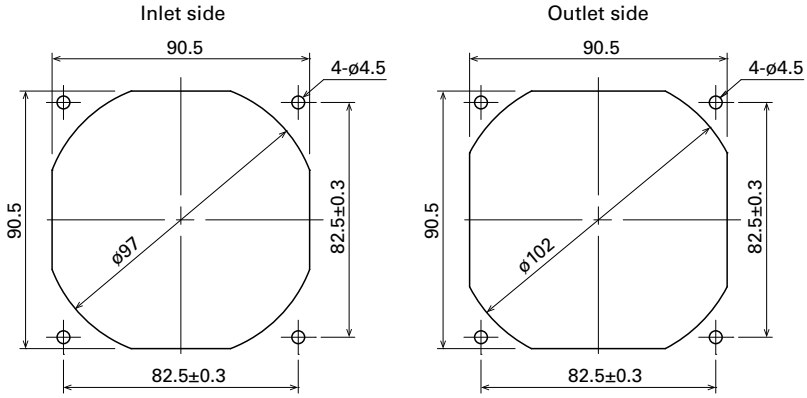

Options

Finger guards page: p. 591

Model no.: 109-099E, 109-099H

Resin finger guards page: p. 597

Model no.: 109-1001G

Resin filter kits page: p. 598

Model no.: 109-1001F13 (13PPI), 109-1001F20 (20PPI),
109-1001F30 (30PPI), 109-1001F40 (40PPI)

DC Fan

92×92×25 mm

San Ace 92 9GA type Low Power Consumption Fan

General Specifications

- Material ..... Frame: Plastic (Flammability: UL 94V-0), Impeller: Plastic (Flammability: UL 94V-0)
- Expected life ..... See the table below. (L10 life: 90% survival rate for continuous operation in free air at 60˚C, rated voltage) Expected life at 40°C is for reference only.
- Motor protection function ..... Locked rotor burnout protection, Reverse polarity protection For details, please refer to p. 608.
- Dielectric strength ..... 50/60 Hz, 500 VAC, for 1 minute (between lead wire conductors and frame)
- Insulation resistance ..... 10 MΩ min. at 500 VDC (between lead wire conductors and frame)
- Sound pressure level (SPL) ..... A-weighted sound pressure level (SPL) at 1 m away from the air inlet.
- Storage temperature ..... -30 to +70˚C (Non-condensing)
- Lead wire ..... ⊕Red ⊖Black Sensor Yellow Control Brown (For models without PWM control, there is no speed control wiring.)
- Mass ..... 125 g

Specifications

The models listed below **have ribs and a pulse sensor with PWM control.** For models without ribs, append "1" to the end of model numbers.

Model no.	Rated voltage [V]	Operating voltage range [V]	PWM duty cycle* [%]	Rated current [A]	Rated input [W]	Rated speed [min⁻¹]	Max. airflow [m³/min]	Max. airflow [CFM]	Max. static pressure [Pa]	Max. static pressure [inchH₂O]	SPL [dB (A)]	Operating temperature [˚C]	Expected life [h]
9GA0912P4J03	12	10.2 to 13.8	100	0.39	4.68	5000	2.2	77.7	105	0.42	43	-20 to +70	60000/60˚C (90000/40˚C)
			0	0.06	0.72	1500	0.65	23.3	9.4	0.04	14		
9GA0912P4G03			100	0.28	3.36	4400	1.93	68.2	81	0.33	39		
			0	0.06	0.72	1500	0.65	23.3	9.4	0.04	14		
9GA0924P4J03	24	20.4 to 27.6	100	0.2	4.8	5000	2.2	77.7	105	0.42	43		
			0	0.04	0.96	1500	0.65	23.3	9.4	0.04	14		
9GA0924P4G03			100	0.15	3.6	4400	1.93	68.2	81	0.33	39		
			0	0.04	0.96	1500	0.65	23.3	9.4	0.04	14		

PWM frequency is 25 kHz. Models without ratings for 0% PWM duty cycle have zero speed at 0%. When control terminal is open, speed is the same as at 100% duty cycle.

Note 1: Sensor and control options are available for selection. Refer to the table on p. 640.
Note 2: The mark indicates Short LeadTime Service applicable models. See p. 664 for details.

Airflow - Static Pressure Characteristics / PWM Duty - Speed Characteristics Example

9GA0912P4J03 With pulse sensor with PWM control

PWM duty cycle

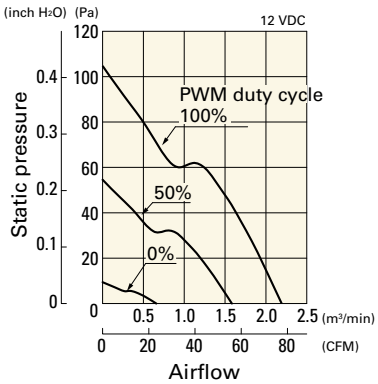

Operating voltage range

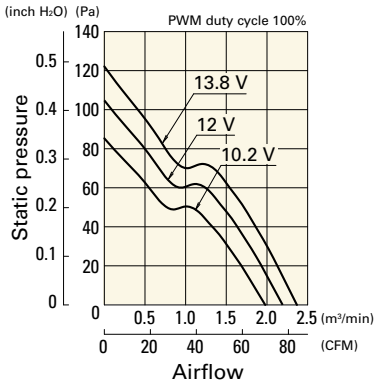

PWM duty - Speed characteristics example

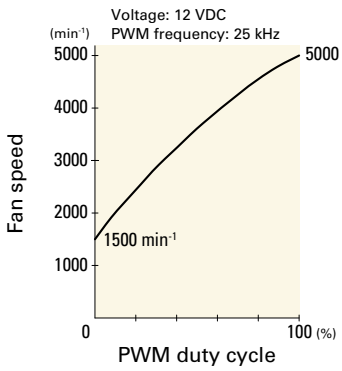

Airflow - Static Pressure Characteristics / PWM Duty - Speed Characteristics Example

9GA0912P4G03 With pulse sensor with PWM control

PWM duty cycle

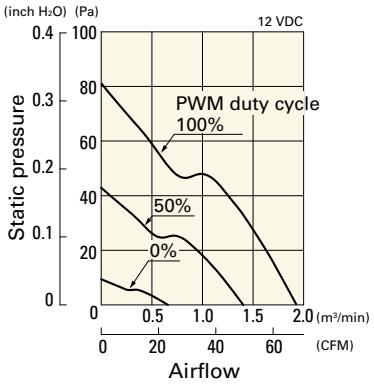

Operating voltage range

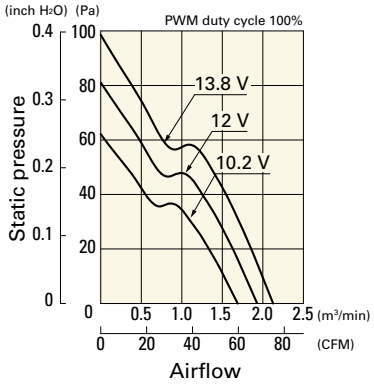

PWM duty - Speed characteristics example

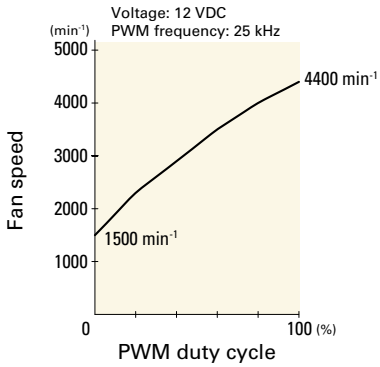

9GA0924P4J03 With pulse sensor with PWM control

PWM duty cycle

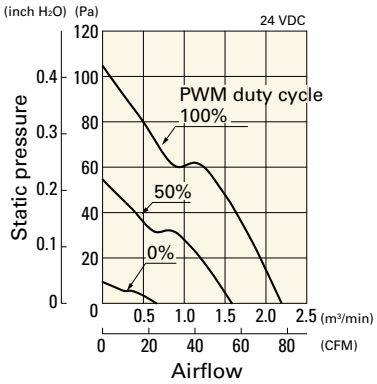

Operating voltage range

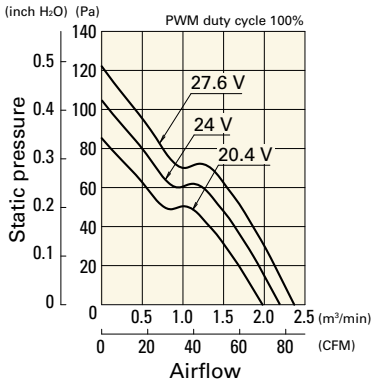

PWM duty - Speed characteristics example

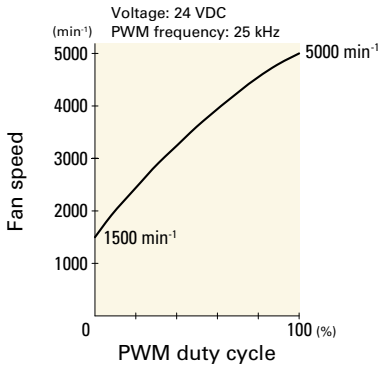

9GA0924P4G03 With pulse sensor with PWM control

PWM duty cycle

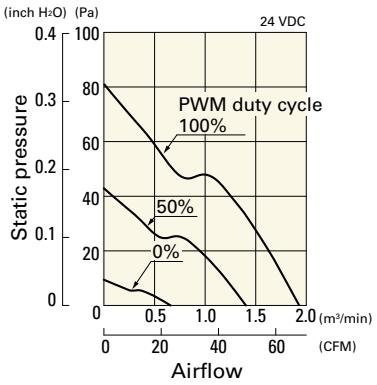

Operating voltage range

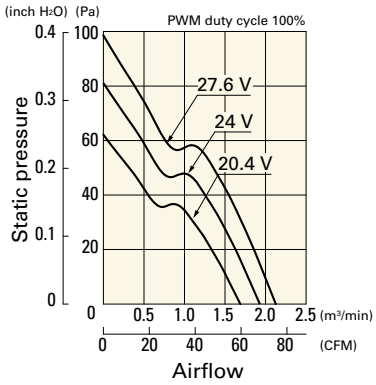

PWM duty - Speed characteristics example

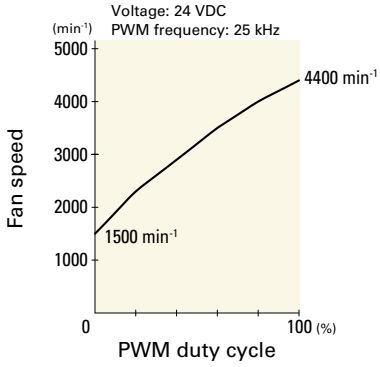

Dimensions (unit: mm) (With ribs)

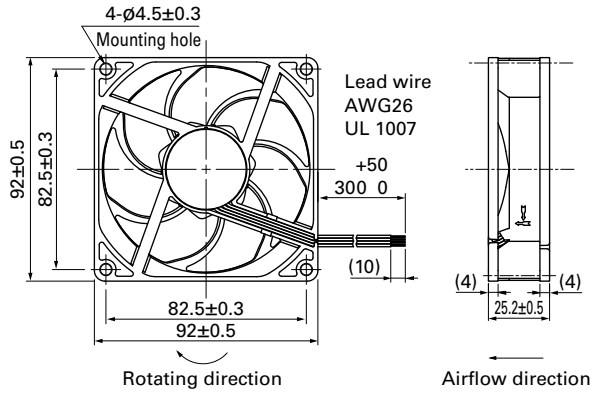

Reference Dimensions of Mounting Holes and Vent Opening (unit: mm)

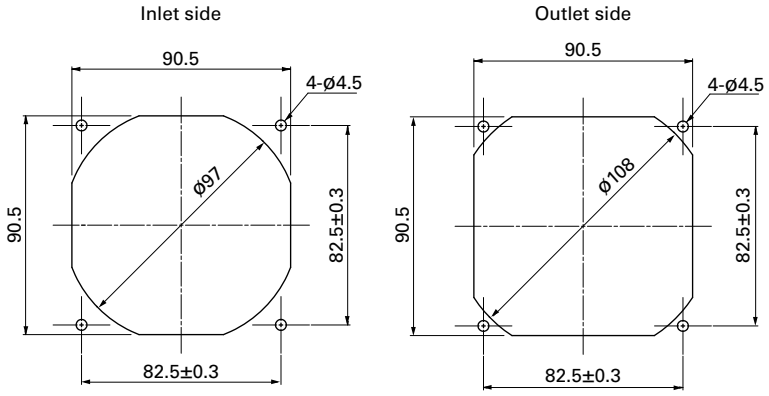

Options

Finger guards
page: p. 591

Model no.: 109-099E, 109-099H

Resin filter kits
page: p. 598

Model no.: 109-1001F13 (13PPI), 109-1001F20 (20PPI),
109-1001F30 (30PPI), 109-1001F40 (40PPI)

Resin finger guards
page: p. 597

Model no.: 109-1001G

92×92×25 mm

San Ace 92 9RA type

General Specifications

- Material ..... Frame: Plastic (Flammability: UL 94V-0), Impeller: Plastic (Flammability: UL 94V-1)
- Expected life ..... See the table below. (L10 life: 90% survival rate for continuous operation in free air at 60˚C, rated voltage) Expected life at 40°C is for reference only.
- Motor protection function ..... Locked rotor burnout protection, Reverse polarity protection For details, please refer to p. 608.
- Dielectric strength ..... 50/60 Hz, 500 VAC, for 1 minute (between lead wire conductors and frame)
- Insulation resistance ..... 10 MΩ min. at 500 VDC (between lead wire conductors and frame)
- Sound pressure level (SPL) ..... A-weighted sound pressure level (SPL) at 1 m away from the air inlet.
- Storage temperature ..... -30 to +70˚C (Non-condensing)
- Lead wire ..... ⊕Red ⊖Black Sensor Yellow Control Brown (For models without PWM control, there is no speed control wiring.)
- Mass ..... 130 g

Specifications

The models listed below **have ribs and a pulse sensor with PWM control.** For models without ribs, append "1" to the end of model numbers.

Model no.	Rated voltage [V]	Operating voltage range [V]	PWM duty cycle* [%]	Rated current [A]	Rated input [W]	Rated speed [min⁻¹]	Max. airflow [m³/min]	Max. airflow [CFM]	Max. static pressure [Pa]	Max. static pressure [inchH₂O]	SPL [dB (A)]	Operating temperature [˚C]	Expected life [h]
9RA0912P4G001	12	10.8 to 13.2	100	0.22	2.64	4200	1.8	63.5	73.5	0.29	37	-20 to +70	60000/60˚C (90000/40˚C)
			30	0.03	0.36	1000	0.42	14.8	4.1	0.016	11		
9RA0924P4G001	24	21.6 to 26.4	100	0.13	3.12	4200	1.8	63.5	73.5	0.29	37		
			20	0.03	0.72	1000	0.42	14.8	4.1	0.016	11		
9RA0948P4G001	48	43.2 to 52.8	100	0.07	3.36	4200	1.8	63.5	73.5	0.29	37		
			20	0.03	1.44	1400	0.6	21.2	8.1	0.033	14		

PWM frequency is 25 kHz. Models without ratings for 0% PWM duty cycle have zero speed at 0%. When control terminal is open, speed is the same as at 100% duty cycle.

The models listed below **have ribs and a pulse sensor.** For models without ribs, append "1" to the end of model numbers.

Model no.	Rated voltage [V]	Operating voltage range [V]	Rated current [A]	Rated input [W]	Rated speed [min⁻¹]	Max. airflow [m³/min]	Max. airflow [CFM]	Max. static pressure [Pa]	Max. static pressure [inchH₂O]	SPL [dB (A)]	Operating temperature [˚C]	Expected life [h]
9RA0912G4001	12	7 to 13.8	0.22	2.64	4200	1.8	63.5	73.5	0.29	37	-20 to +70	60000/60˚C (90000/40˚C)
9RA0912S4001			0.2	2.4	3850	1.65	58.3	61.7	0.25	35		
9RA0912H4001			0.14	1.68	3400	1.46	51.6	48.1	0.19	31		
9RA0912F4001			0.1	1.2	2850	1.22	43.1	33.8	0.14	27		
9RA0912M4001			0.07	0.84	2450	1.05	37.1	25	0.1	23		
9RA0924G4001	24	14 to 27.6	0.13	3.12	4200	1.8	63.5	73.5	0.29	37		
9RA0924S4001			0.1	2.4	3850	1.65	58.3	61.7	0.25	35		
9RA0924H4001			0.08	1.92	3400	1.46	51.6	48.1	0.19	31		
9RA0924F4001			0.06	1.44	2850	1.22	43.1	33.8	0.14	27		
9RA0924M4001			0.04	0.96	2450	1.05	37.1	25	0.1	23		
9RA0948G4001	48	36 to 55.2	0.07	3.36	4200	1.8	63.5	73.5	0.29	37		
9RA0948S4001			0.06	2.88	3850	1.65	58.3	61.7	0.25	35		
9RA0948H4001			0.05	2.4	3400	1.46	51.6	48.1	0.19	31		

Note 1: Sensor and control options are available for selection. Refer to the table on pp. 646 to 647.
Note 2: The » mark indicates Short LeadTime Service applicable models. See p. 664 for details.

Airflow - Static Pressure Characteristics / PWM Duty - Speed Characteristics Example

9RA0912P4G001 With pulse sensor with PWM control

PWM duty cycle

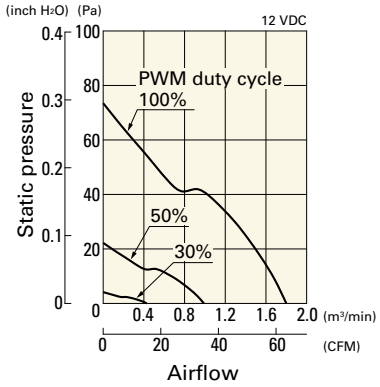

Operating voltage range

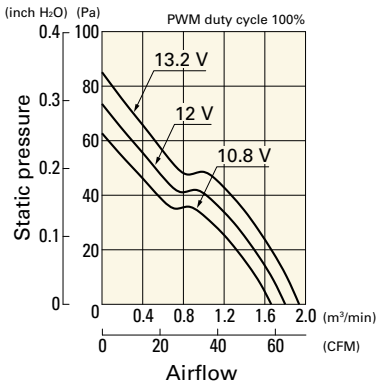

PWM duty - Speed characteristics example

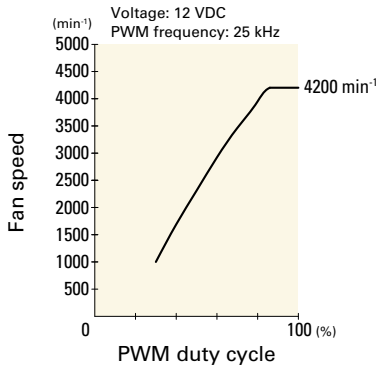

9RA0924P4G001 With pulse sensor with PWM control

PWM duty cycle

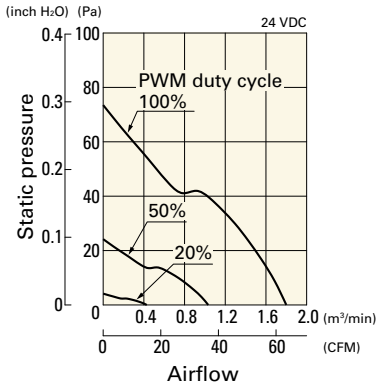

Operating voltage range

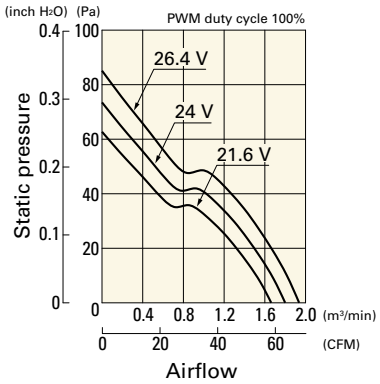

PWM duty - Speed characteristics example

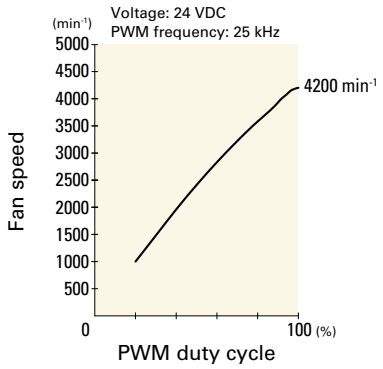

9RA0948P4G001 With pulse sensor with PWM control

PWM duty cycle

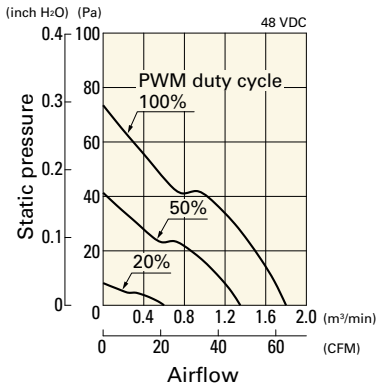

Operating voltage range

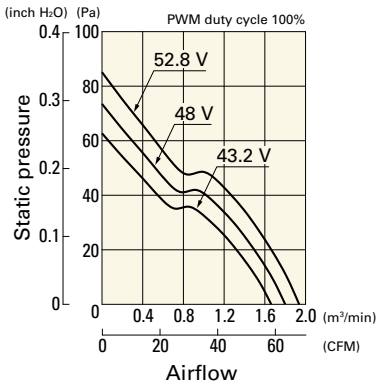

PWM duty - Speed characteristics example

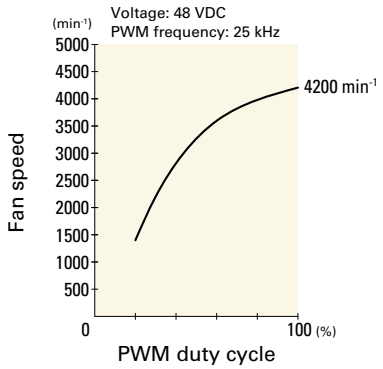

Airflow - Static Pressure Characteristics

9RA0912G4001 With pulse sensor

Operating voltage range

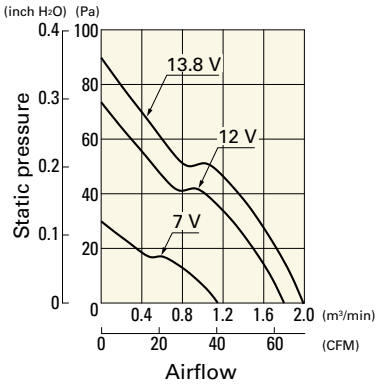

9RA0912S4001 With pulse sensor

Operating voltage range

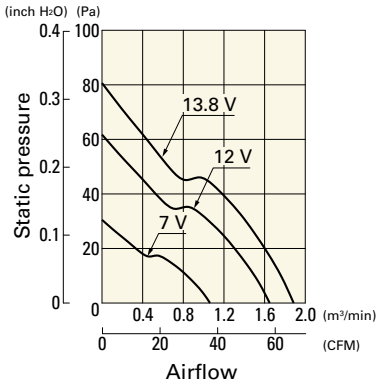

9RA0912H4001 With pulse sensor

Operating voltage range

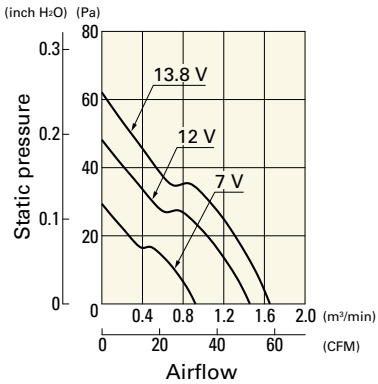

9RA0912F4001 With pulse sensor

Operating voltage range

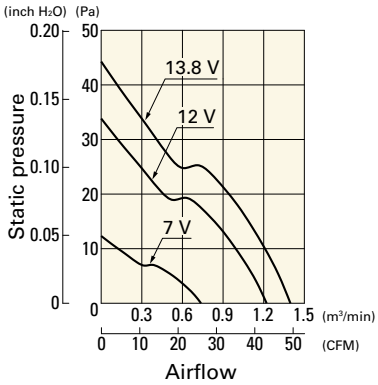

9RA0912M4001 With pulse sensor

Operating voltage range

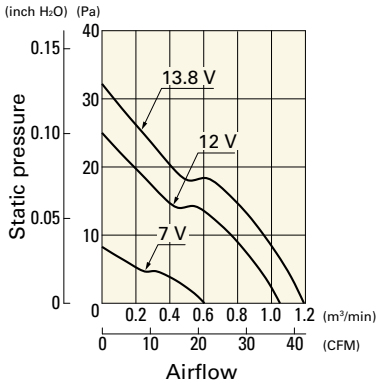

9RA0924G4001 With pulse sensor

Operating voltage range

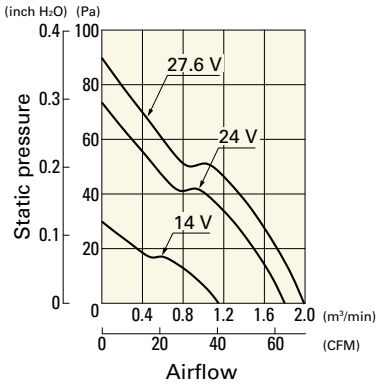

9RA0924S4001 With pulse sensor

Operating voltage range

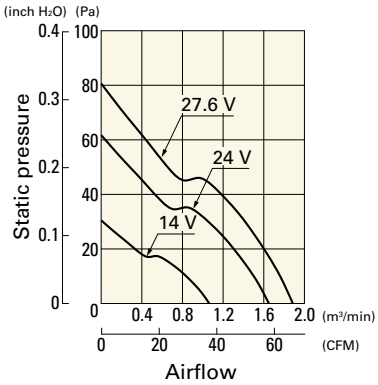

9RA0924H4001 With pulse sensor

Operating voltage range

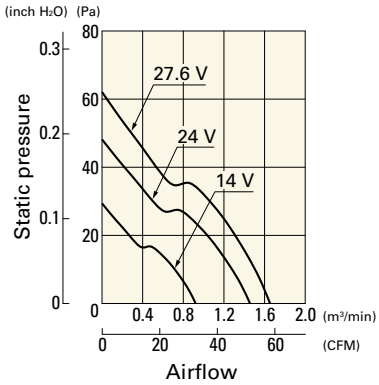

9RA0924F4001 With pulse sensor

Operating voltage range

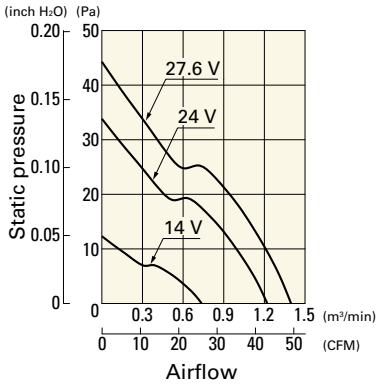

9RA0924M4001 With pulse sensor

Operating voltage range

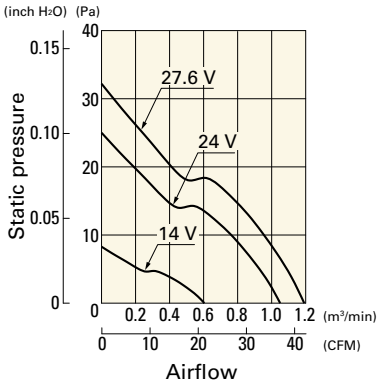

9RA0948G4001 With pulse sensor

Operating voltage range

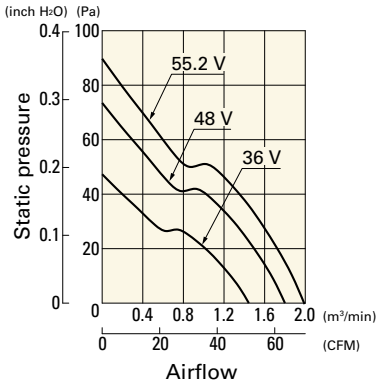

9RA0948S4001 With pulse sensor

Operating voltage range

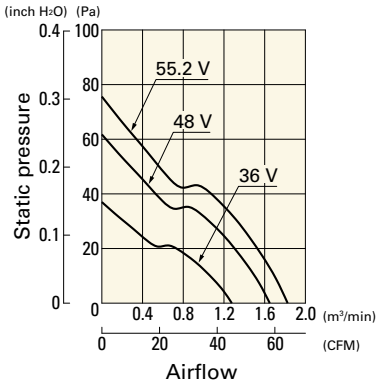

Airflow - Static Pressure Characteristics

9RA0948H4001 With pulse sensor

Operating voltage range

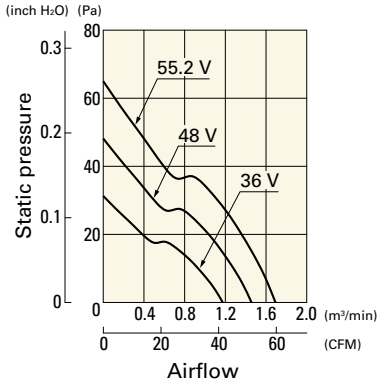

Dimensions (unit: mm) (Ribbed frame with pulse sensor with PWM control)

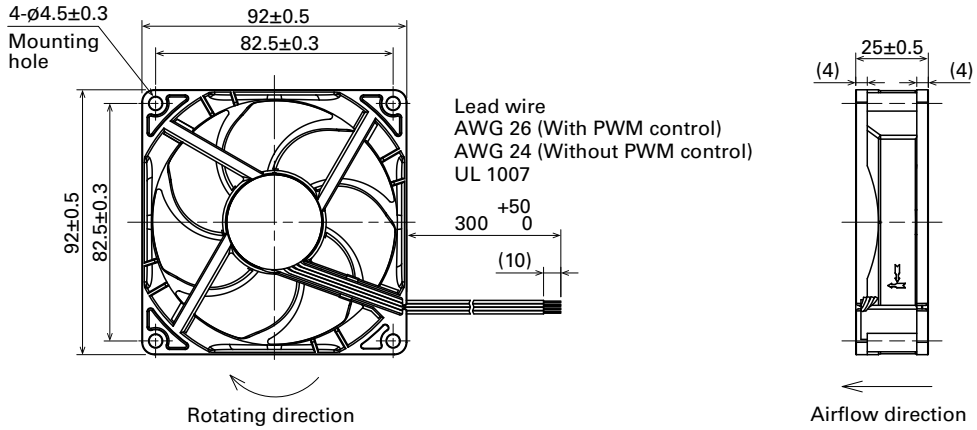

Reference Dimensions of Mounting Holes and Vent Opening (unit: mm)

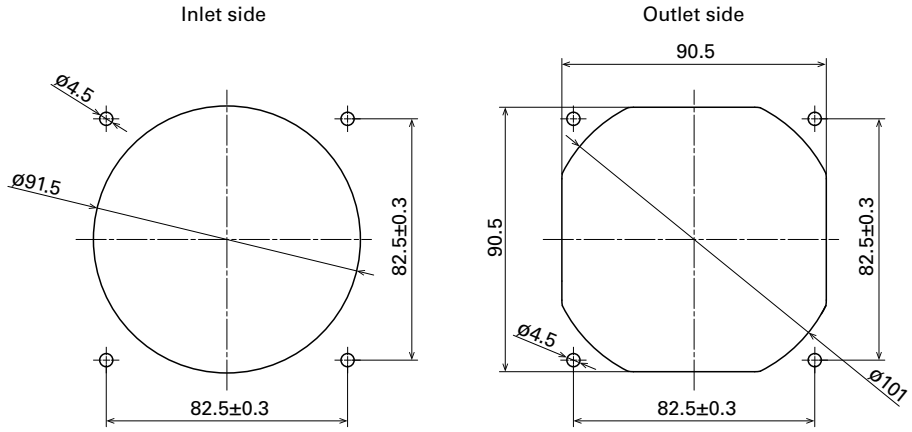

Options

Finger guards page: p. 591

Model no.: 109-099E, 109-099H

Resin finger guards page: p. 597

Model no.: 109-1001G

Resin filter kits page: p. 598

Model no.: 109-1001F13 (13PPI), 109-1001F20 (20PPI),
109-1001F30 (30PPI), 109-1001F40 (40PPI)

92×92×25 mm

San Ace 92 9S type Silent Fan

General Specifications

- Material ..... Frame: Plastic (Flammability: UL 94V-0), Impeller: Plastic (Flammability: UL 94V-1)
- Expected life ..... See the table below. (L10 life: 90% survival rate for continuous operation in free air at 60˚C, rated voltage) Expected life at 40°C is for reference only.
- Motor protection function ..... Locked rotor burnout protection, Reverse polarity protection For details, please refer to p. 608.
- Dielectric strength ..... 50/60 Hz, 500 VAC, for 1 minute (between lead wire conductors and frame)
- Insulation resistance ..... 10 MΩ min. at 500 VDC (between lead wire conductors and frame)
- Sound pressure level (SPL) ..... A-weighted sound pressure level (SPL) at 1 m away from the air inlet.
- Storage temperature ..... -30 to +70˚C (Non-condensing)
- Lead wire ..... ⊕Red ⊖Black Sensor Yellow
- Mass ..... 100 g

Specifications

The models listed below **have ribs and a pulse sensor.** For models without ribs, append "1" to the end of model numbers.

Model no.	Rated voltage [V]	Operating voltage range [V]	Rated current [A]	Rated input [W]	Rated speed [min⁻¹]	Max. airflow [m³/min]	Max. airflow [CFM]	Max. static pressure [Pa]	Max. static pressure [inchH₂O]	SPL [dB (A)]	Operating temperature [˚C]	Expected life [h]
9S0912F401	12	6 to 13.8	0.14	1.68	2650	1.26	44.5	30.0	0.12	27	-10 to +70	40000/60˚C (70000/40˚C)
9S0912M401		7 to 13.8	0.11	1.32	2250	1.07	37.8	21.6	0.087	22		
9S0912L401			0.07	0.84	1750	0.83	29.3	13.1	0.053	17		
9S0924F401	24	14 to 26.4	0.09	2.16	2650	1.26	44.5	30.0	0.12	27		
9S0924M401			0.07	1.68	2250	1.07	37.8	21.6	0.087	22		
9S0924L401			0.04	0.96	1750	0.83	29.3	13.1	0.053	17		

Note 1: Sensor and control options are available for selection. Refer to the table on p. 649.
Note 2: The » mark indicates Short LeadTime Service applicable models. See p. 664 for details.

Airflow - Static Pressure Characteristics

9S0912F401 With pulse sensor

Operating voltage range

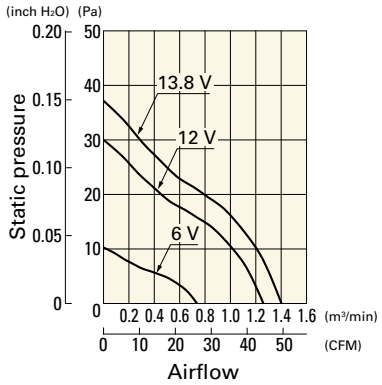

9S0912M401 With pulse sensor

Operating voltage range

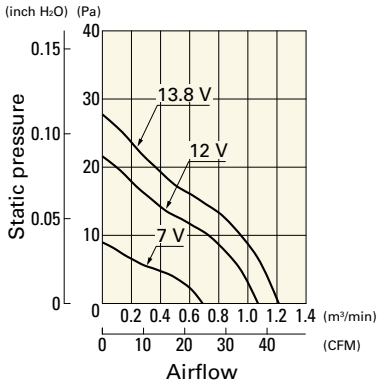

9S0912L401 With pulse sensor

Operating voltage range

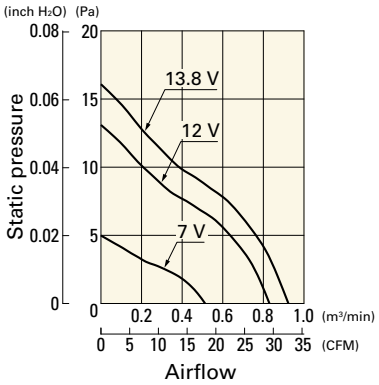

Airflow - Static Pressure Characteristics

9S0924F401 With pulse sensor

Operating voltage range

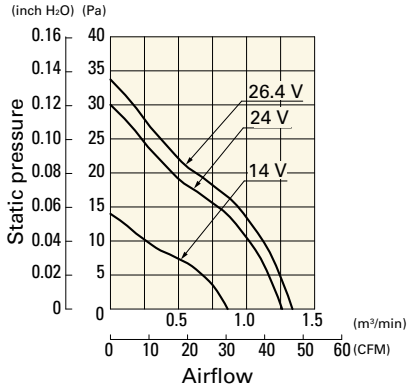

9S0924M401 With pulse sensor

Operating voltage range

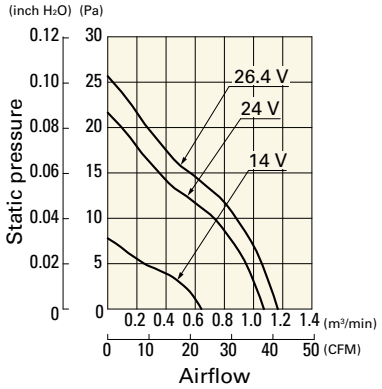

9S0924L401 With pulse sensor

Operating voltage range

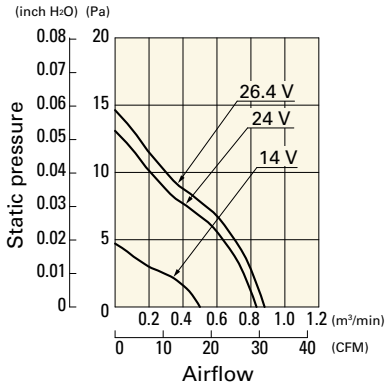

Dimensions (unit: mm) (With ribs)

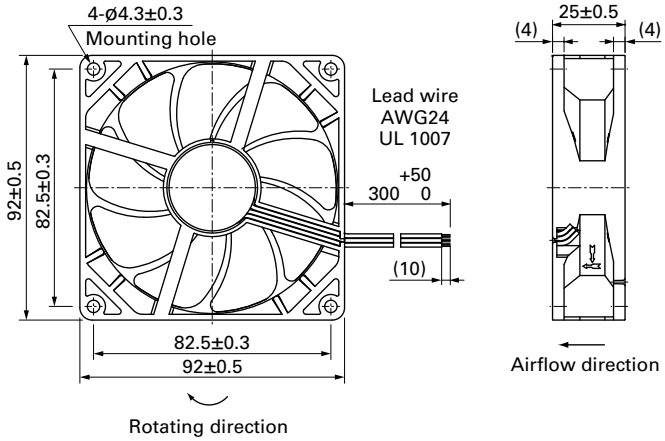

Reference Dimensions of Mounting Holes and Vent Opening (unit: mm)

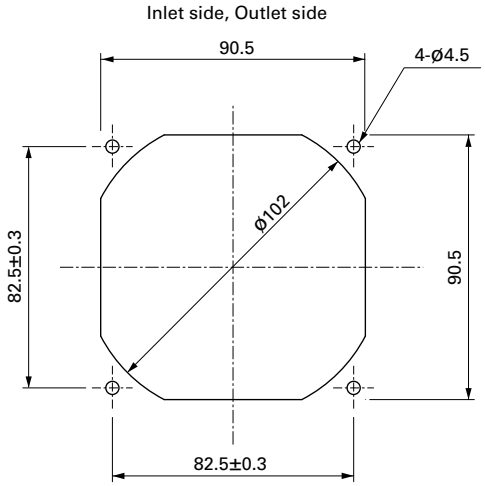

Options

Finger guards page: p. 591

Model no.: 109-099E, 109-099H

Resin finger guards page: p. 597

Model no.: 109-1001G

Resin filter kits page: p. 598

Model no.: 109-1001F13 (13PPI), 109-1001F20 (20PPI),
109-1001F30 (30PPI), 109-1001F40 (40PPI)

92×92×32 mm

San Ace 92 9G type

General Specifications

- Material ..... Frame: Plastic (Flammability: UL 94V-0), Impeller: Plastic (Flammability: UL 94V-1)
- Expected life ..... See the table below. (L10 life: 90% survival rate for continuous operation in free air at 60˚C, rated voltage) Expected life at 40°C is for reference only.
- Motor protection function ..... Locked rotor burnout protection, Reverse polarity protection For details, please refer to p. 608.
- Dielectric strength ..... 50/60 Hz, 500 VAC, for 1 minute (between lead wire conductors and frame)
- Insulation resistance ..... 10 MΩ min. at 500 VDC (between lead wire conductors and frame)
- Sound pressure level (SPL) ..... A-weighted sound pressure level (SPL) at 1 m away from the air inlet.
- Storage temperature ..... -30 to +70˚C (Non-condensing)
- Lead wire ..... ⊕Red ⊖Black or Blue Sensor Yellow
- Mass ..... 170 g

Specifications

The models listed below **have ribs and a pulse sensor.** For models without ribs, append "1" to the end of model numbers.

Model no.	Rated voltage [V]	Operating voltage range [V]	Rated current [A]	Rated input [W]	Rated speed [min⁻¹]	Max. airflow [m³/min]	Max. airflow [CFM]	Max. static pressure [Pa]	Max. static pressure [inchH₂O]	SPL [dB (A)]	Operating temperature [˚C]	Expected life [h]
9G0912A201	12	10.2 to 13.8	0.58	6.96	4300	2.5	88.3	115	0.462	44	-20 to +70	40000/60˚C (70000/40˚C)
9G0912S201			0.38	4.56	3500	2.0	70.7	77	0.309	38		
9G0912H201			0.23	2.76	2850	1.59	56.2	51	0.205	32		
9G0912M201			0.13	1.56	2100	1.2	42.4	27	0.108	25		
9G0924A201	24	20.4 to 27.6	0.3	7.2	4300	2.5	88.3	115	0.462	44	-20 to +60	
9G0924S201			0.19	4.56	3500	2.0	70.7	77	0.309	38	-20 to +70	
9G0924H201			0.12	2.88	2850	1.59	56.2	51	0.205	32		
9G0924M201			0.08	1.92	2100	1.2	42.4	27	0.108	25		
9G0948A201	48	40.8 to 55.2	0.16	7.68	4300	2.5	88.3	115	0.462	44		
9G0948S201			0.11	5.28	3500	2.0	70.7	77	0.309	38		
9G0948H201			0.08	3.84	2850	1.59	56.2	51	0.205	32		
9G0948M201			0.05	2.4	2100	1.2	42.4	27	0.108	25		

Note 1: Sensor and control options are available for selection. Refer to the table on p. 637.
Note 2: The » mark indicates Short LeadTime Service applicable models. See p. 664 for details.

Airflow - Static Pressure Characteristics

9G0912A201 With pulse sensor

Operating voltage range

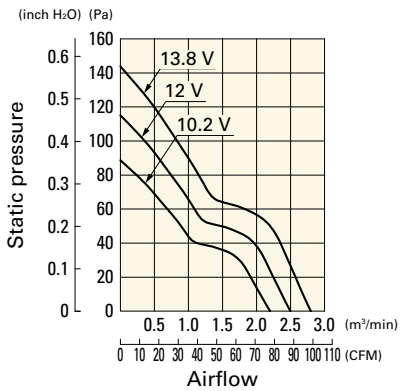

9G0912S201 With pulse sensor

Operating voltage range

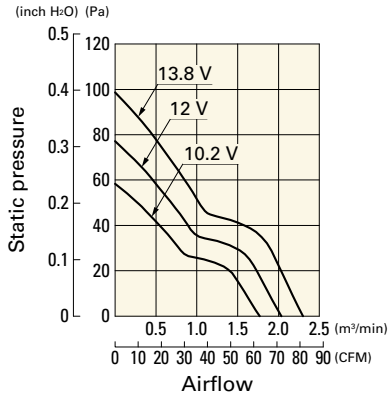

9G0912H201 With pulse sensor

Operating voltage range

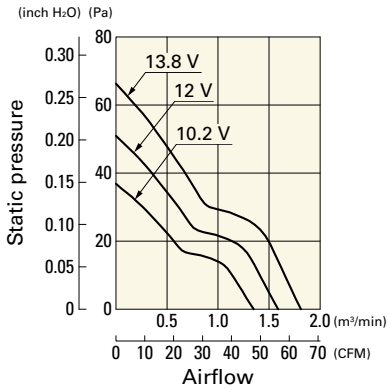

Airflow - Static Pressure Characteristics

9G0912M201 With pulse sensor

Operating voltage range

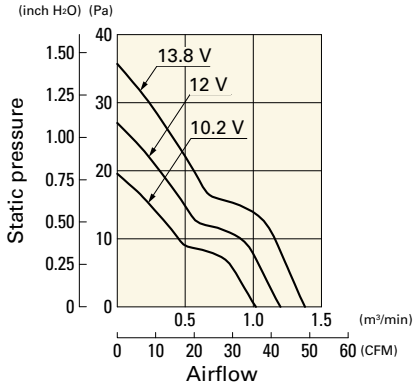

9G0924A201 With pulse sensor

Operating voltage range

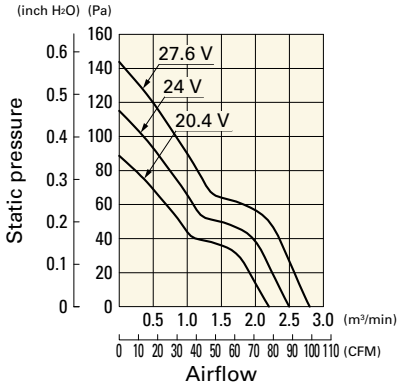

9G0924S201 With pulse sensor

Operating voltage range

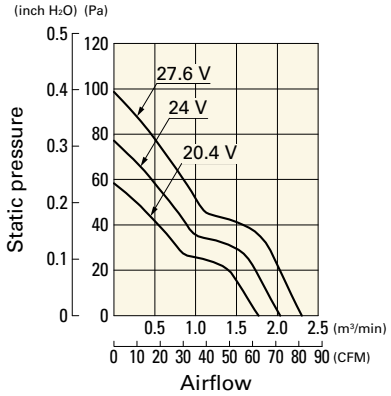

9G0924H201 With pulse sensor

Operating voltage range

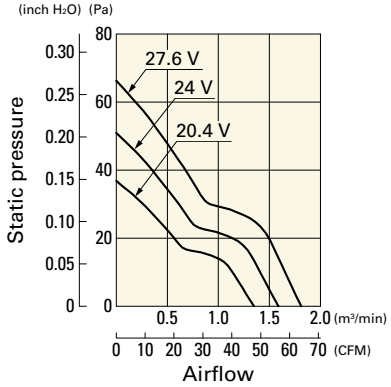

9G0924M201 With pulse sensor

Operating voltage range

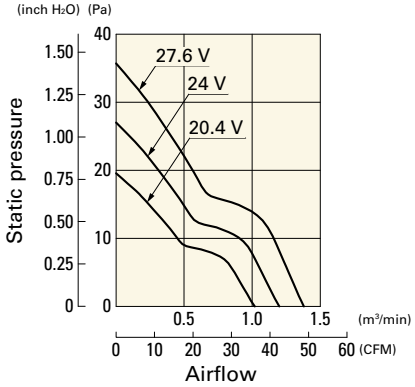

9G0948A201 With pulse sensor

Operating voltage range

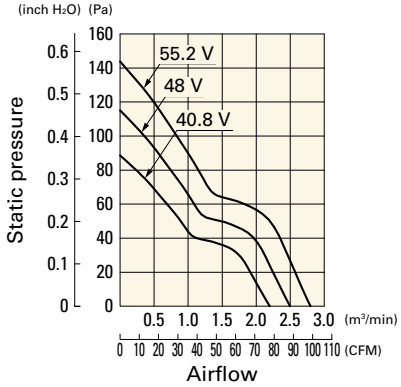

9G0948S201 With pulse sensor

Operating voltage range

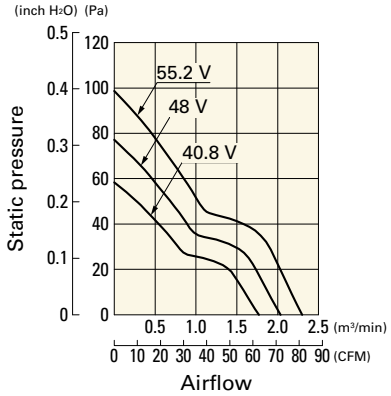

9G0948H201 With pulse sensor

Operating voltage range

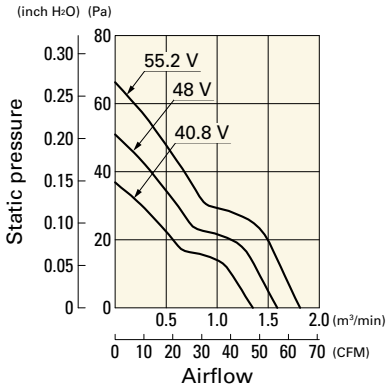

9G0948M201 With pulse sensor

Operating voltage range

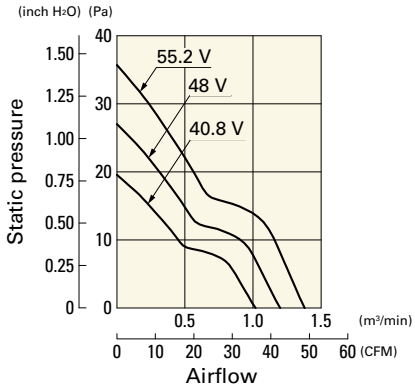

Dimensions (unit: mm) (With ribs)

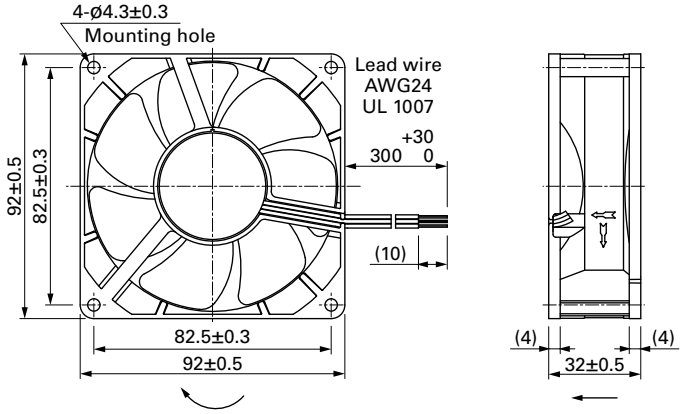

Reference Dimensions of Mounting Holes and Vent Opening (unit: mm)

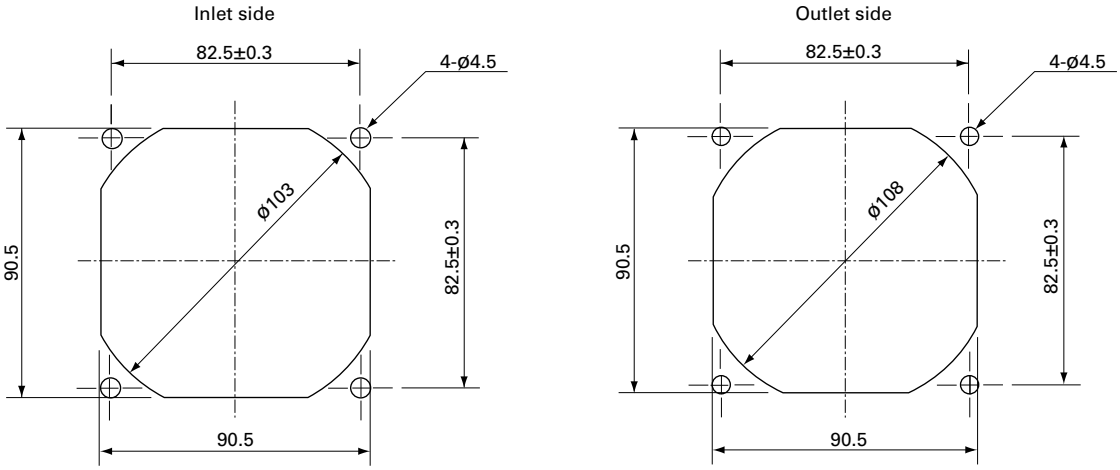

Options

Finger guards page: p. 591

Model no.: 109-099E, 109-099H

Resin filter kits page: p. 598

Model no.: 109-1001F13 (13PPI), 109-1001F20 (20PPI),
109-1001F30 (30PPI), 109-1001F40 (40PPI)

Resin finger guards page: p. 597

Model no.: 109-1001G

DC Fan

92×92×38 mm

San Ace 92 9HV type

General Specifications

- Material ..... Frame: Plastic (Flammability: UL 94V-0), Impeller: Plastic (Flammability: UL 94V-1)
- Expected life ..... See the table below. (L10 life: 90% survival rate for continuous operation in free air at 60˚C, rated voltage) Expected life at 40°C is for reference only.
- Motor protection function ..... Locked rotor burnout protection, Reverse polarity protection For details, please refer to p. 608.
- Dielectric strength ..... 50/60 Hz, 500 VAC, for 1 minute (between lead wire conductors and frame)
- Insulation resistance ..... 10 MΩ min. at 500 VDC (between lead wire conductors and frame)
- Sound pressure level (SPL) ..... A-weighted sound pressure level (SPL) at 1 m away from the air inlet.
- Storage temperature ..... -30 to +70˚C (Non-condensing)
- Lead wire ..... ⊕Red ⊖Black Sensor Yellow Control Brown
- Mass ..... 250 g

Specifications

The models listed below **have ribs and a pulse sensor with PWM control.** For models without ribs, append "1" to the end of model numbers.

Model no.	Rated voltage [V]	Operating voltage range [V]	PWM duty cycle* [%]	Rated current [A]	Rated input [W]	Rated speed [min⁻¹]	Max. airflow [m³/min]	Max. airflow [CFM]	Max. static pressure [Pa]	Max. static pressure [inchH₂O]	SPL [dB (A)]	Operating temperature [˚C]	Expected life [h]
9HV0912P1G001	12	8 to 12.6	100	5.2	62.4	14900	5.1	180	1100	4.42	72	-20 to +70	40000/60˚C (70000/40˚C)
			0	0.8	9.6	4500	1.54	54.4	160	0.64	44		
9HV0924P1G001	24	20.4 to 27.6	100	2.50	60.0	14900	5.1	180	1100	4.42	72		
			0	0.34	8.16	4500	1.54	54.4	160	0.64	44		
9HV0948P1G001	48	36 to 60	100	1.2	57.6	14900	5.1	180	1100	4.42	72		
			0	0.15	7.2	4500	1.54	54.4	160	0.64	44		

PWM frequency is 25 kHz. Models without ratings for 0% PWM duty cycle have zero speed at 0%. When control terminal is open, speed is the same as at 100% duty cycle.

Note 1: Sensor and control options are available for selection. Refer to the table on p. 642.
Note 2: The » mark indicates Short LeadTime Service applicable models. See p. 664 for details.

Airflow - Static Pressure Characteristics / PWM Duty - Speed Characteristics Example

9HV0912P1G001 With pulse sensor with PWM control

PWM duty cycle

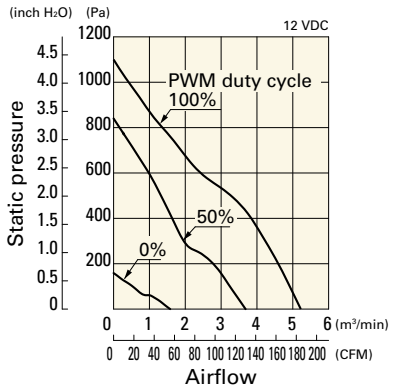

Operating voltage range

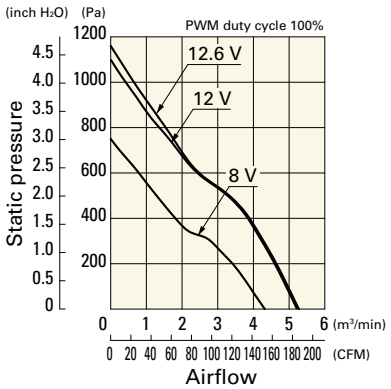

PWM duty - Speed characteristics example

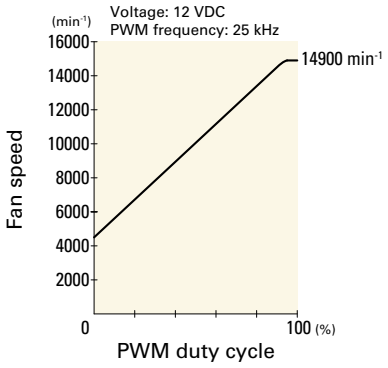

Airflow - Static Pressure Characteristics / PWM Duty - Speed Characteristics Example

9HV0924P1G001 With pulse sensor with PWM control

PWM duty cycle

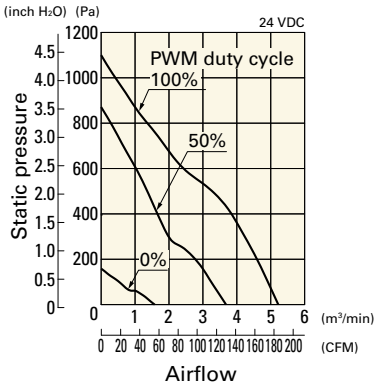

Operating voltage range

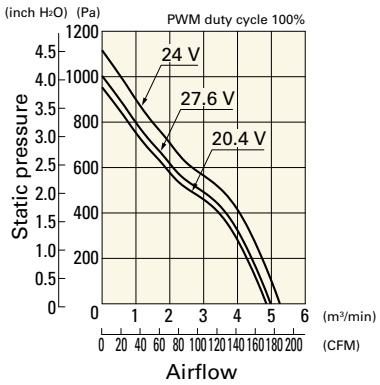

PWM duty - Speed characteristics example

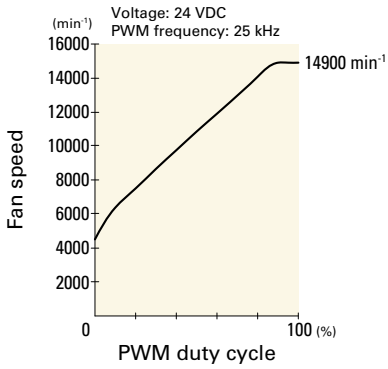

9HV0948P1G001 With pulse sensor with PWM control

PWM duty cycle

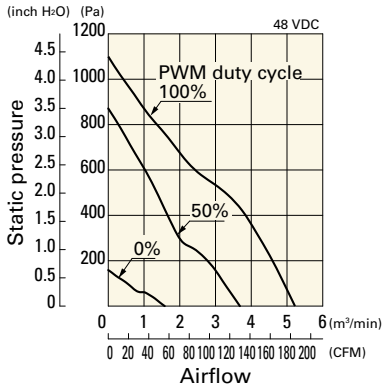

Operating voltage range

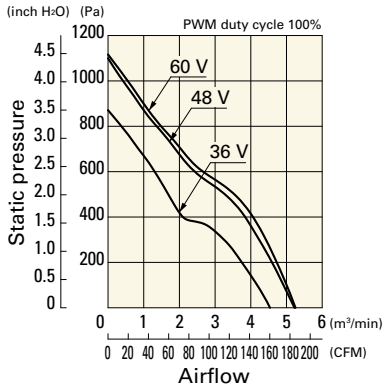

PWM duty - Speed characteristics example

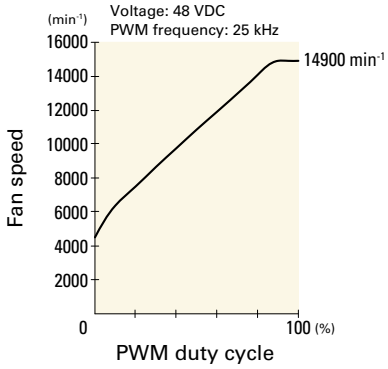

Dimensions (unit: mm) (With ribs)

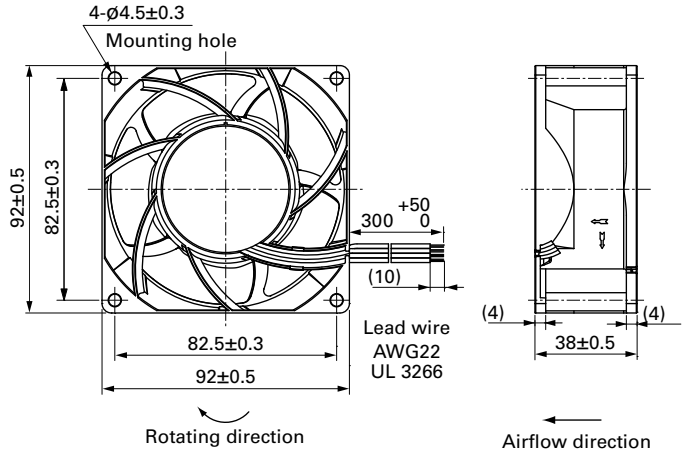

Reference Dimensions of Mounting Holes and Vent Opening (unit: mm)

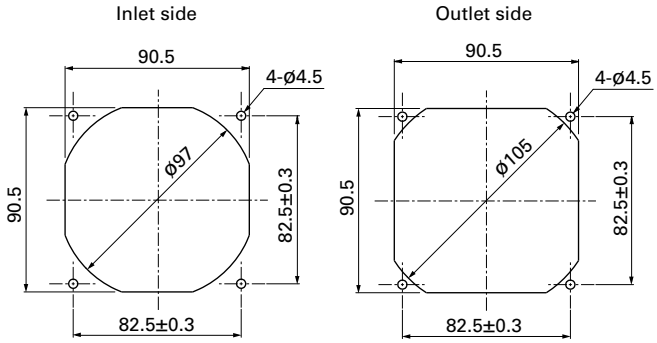

Options

Finger guards
page: p. 591

Model no.: 109-099E, 109-099H

Resin filter kits
page: p. 598

Model no.: 109-1001F13 (13PPI), 109-1001F20 (20PPI),
109-1001F30 (30PPI), 109-1001F40 (40PPI)

Resin finger guards
page: p. 597

Model no.: 109-1001G

92×92×38 mm

San Ace 92 9GA type Low Power Consumption Fan

General Specifications

- Material ..... Frame: Plastic (Flammability: UL 94V-0), Impeller: Plastic (Flammability: UL 94V-0)
- Expected life ..... See the table below. (L10 life: 90% survival rate for continuous operation in free air at 60˚C, rated voltage) Expected life at 40°C is for reference only.
- Motor protection function ..... Locked rotor burnout protection, Reverse polarity protection For details, please refer to p. 608.
- Dielectric strength ..... 50/60 Hz, 500 VAC, for 1 minute (between lead wire conductors and frame)
- Insulation resistance ..... 10 MΩ min. at 500 VDC (between lead wire conductors and frame)
- Sound pressure level (SPL) ..... A-weighted sound pressure level (SPL) at 1 m away from the air inlet.
- Storage temperature ..... -30 to +70˚C (Non-condensing)
- Lead wire ..... ⊕Red ⊖Black Sensor Yellow Control Brown
- Mass ..... 240 g

Specifications

The models listed below **have ribs and a pulse sensor with PWM control.** For models without ribs, append "1" to the end of model numbers.

Model no.	Rated voltage [V]	Operating voltage range [V]	PWM duty cycle* [%]	Rated current [A]	Rated input [W]	Rated speed [min⁻¹]	Max. airflow [m³/min]	Max. airflow [CFM]	Max. static pressure [Pa]	Max. static pressure [inchH₂O]	SPL [dB (A)]	Operating temperature [˚C]	Expected life [h]
9GA0912P1H03	12	10.2 to 13.8	100	2.1	25.2	9700	4.0	141	500	2.01	63	-20 to +70	40000/60˚C (70000/40˚C)
			0	0.16	1.92	2500	0.97	34.3	33	0.13	29		
9GA0924P1H01	24	20.4 to 27.6	100	1.1	26.4	9700	4.0	141	500	2.01	63	-10 to +70	
			0	0.07	1.68	2500	0.97	34.3	33	0.13	29		
9GA0948P1H03	48	40.8 to 55.2	100	0.55	26.4	9700	4.0	141	500	2.01	63	-20 to +70	

PWM frequency is 25 kHz. Models without ratings for 0% PWM duty cycle have zero speed at 0%. When control terminal is open, speed is the same as at 100% duty cycle.

Note 1: Sensor and control options are available for selection. Refer to the table on p. 640.
Note 2: The » mark indicates Short LeadTime Service applicable models. See p. 664 for details.

Airflow - Static Pressure Characteristics / PWM Duty - Speed Characteristics Example

9GA0912P1H03 With pulse sensor with PWM control

PWM duty cycle

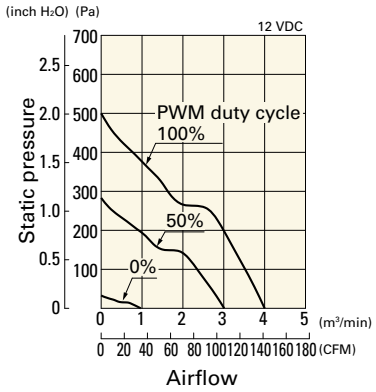

Operating voltage range

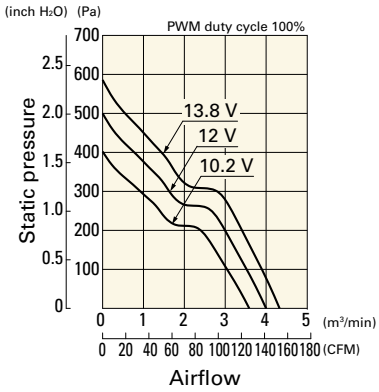

PWM duty - Speed characteristics example

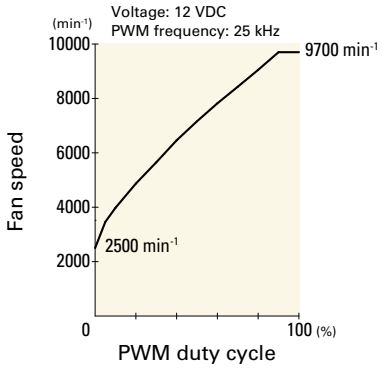

Airflow - Static Pressure Characteristics / PWM Duty - Speed Characteristics Example

9GA0924P1H01 With pulse sensor with PWM control

PWM duty cycle

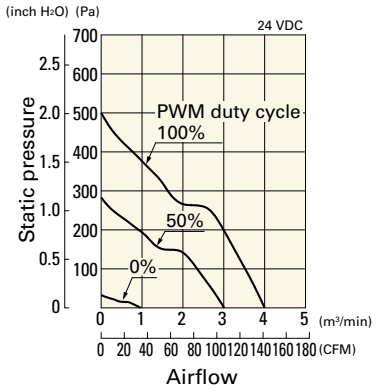

Operating voltage range

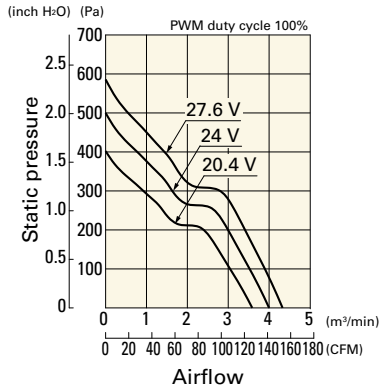

PWM duty - Speed characteristics example

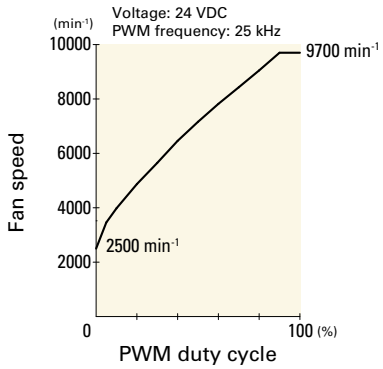

9GA0948P1H03 With pulse sensor with PWM control

PWM duty cycle

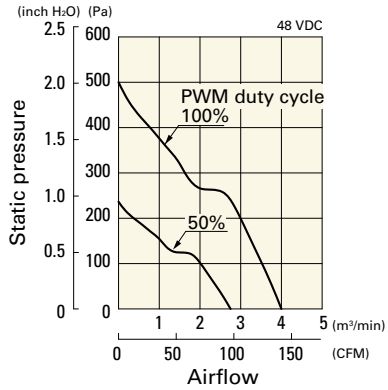

Operating voltage range

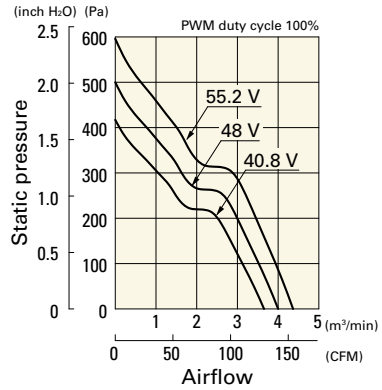

PWM duty - Speed characteristics example

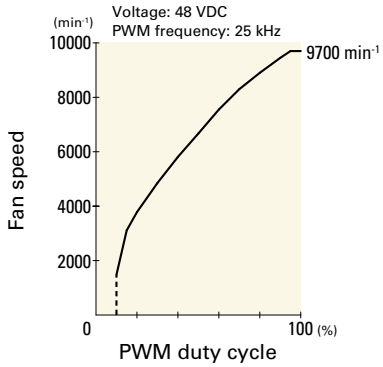

Dimensions (unit: mm) (With ribs)

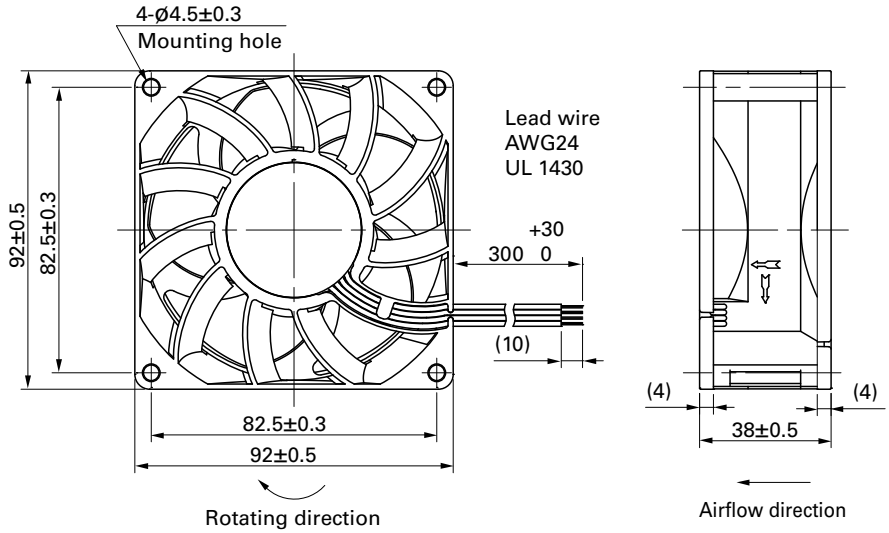

Reference Dimensions of Mounting Holes and Vent Opening (unit: mm)

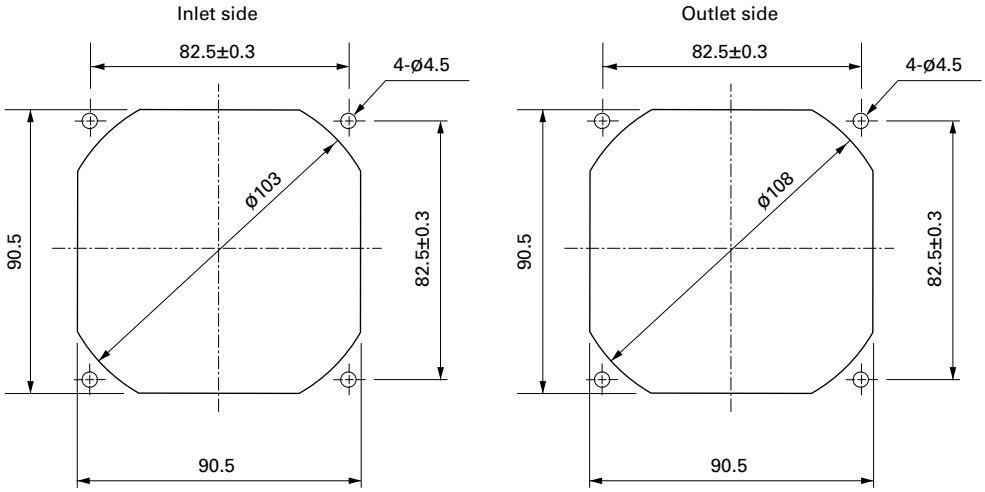

Options

Finger guards page: p. 591

Model no.: 109-099E, 109-099H

Resin filter kits page: p. 598

Model no.: 109-1001F13 (13PPI), 109-1001F20 (20PPI),
109-1001F30 (30PPI), 109-1001F40 (40PPI)

Resin finger guards page: p. 597

Model no.: 109-1001G

DC Fan

92×92×38 mm

San Ace 92 9GV type

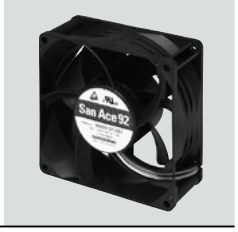

General Specifications

- Material ..... Frame: Plastic (Flammability: UL 94V-0), Impeller: Plastic (Flammability: UL 94V-1)
- Expected life ..... See the table below. (L10 life: 90% survival rate for continuous operation in free air at 60˚C, rated voltage) Expected life at 40°C is for reference only.
- Motor protection function ..... Locked rotor burnout protection, Reverse polarity protection For details, please refer to p. 608.
- Dielectric strength ..... 50/60 Hz, 500 VAC, for 1 minute (between lead wire conductors and frame)
- Insulation resistance ..... 10 MΩ min. at 500 VDC (between lead wire conductors and frame)
- Sound pressure level (SPL) ..... A-weighted sound pressure level (SPL) at 1 m away from the air inlet.
- Storage temperature ..... -30 to +70˚C (Non-condensing)
- Lead wire ..... ⊕Red ⊖Black Sensor Yellow Control Brown
- Mass ..... 250 g

Specifications

The models listed below **have ribs and a pulse sensor with PWM control.** For models without ribs, append "1" to the end of model numbers.

Model no.	Rated voltage [V]	Operating voltage range [V]	PWM duty cycle* [%]	Rated current [A]	Rated input [W]	Rated speed [min⁻¹]	Max. airflow [m³/min]	Max. airflow [CFM]	Max. static pressure [Pa]	Max. static pressure [inchH₂O]	SPL [dB (A)]	Operating temperature [˚C]	Expected life [h]
9GV0912P1G03	12	10.8 to 13.2	100	4.1	49.2	9000	5.35	189.0	430.0	1.73	68	-20 to +70	40000/60˚C (70000/40˚C)
			0	0.33	4.0	2900	1.72	60.8	44.6	0.18	37		
9GV0912P1H03		10.2 to 13.8	100	3.5	42.0	8500	5.05	178.0	385.0	1.55	64		
			0	0.29	3.5	2700	1.6	56.5	38.8	0.16	34		
9GV0912P1F03			100	1.9	22.8	7000	4.15	146.6	261	1.05	59	-10 to +70	
			0	0.16	1.92	2200	1.3	45.9	25.7	0.1	31		
9GV0948P1H03	48	40.8 to 55.2	100	0.82	39.4	8500	5.05	178.0	385.0	1.55	64	-20 to +70	
			0	0.14	6.7	4000	2.37	83.7	85.2	0.34	45		
9GV0948P1F03			100	0.48	23.04	7000	4.15	146.6	261	1.05	59	-10 to +70	
			0	0.12	5.76	3500	2.07	73.1	65.2	0.26	42		

PWM frequency is 25 kHz. Models without ratings for 0% PWM duty cycle have zero speed at 0%. When control terminal is open, speed is the same as at 100% duty cycle.

Note: Sensor and control options are available for selection. Refer to the table on p. 641.

Airflow - Static Pressure Characteristics / PWM Duty - Speed Characteristics Example

9GV0912P1G03 With pulse sensor with PWM control

PWM duty cycle

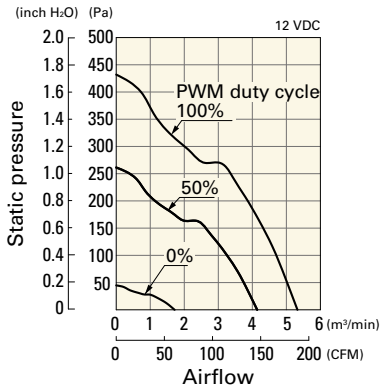

Operating voltage range

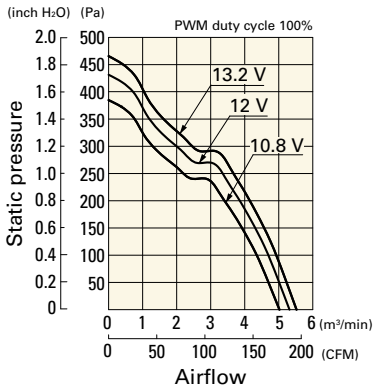

PWM duty - Speed characteristics example

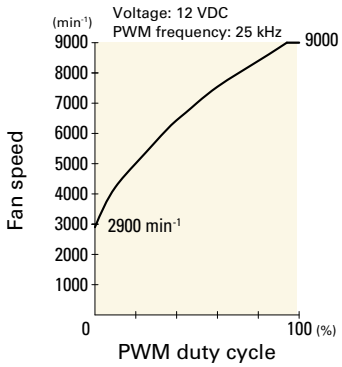

Airflow - Static Pressure Characteristics / PWM Duty - Speed Characteristics Example

9GV0912P1H03 With pulse sensor with PWM control

PWM duty cycle

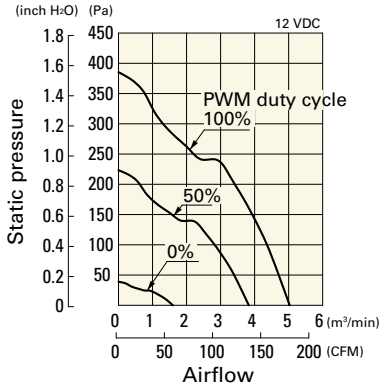

Operating voltage range

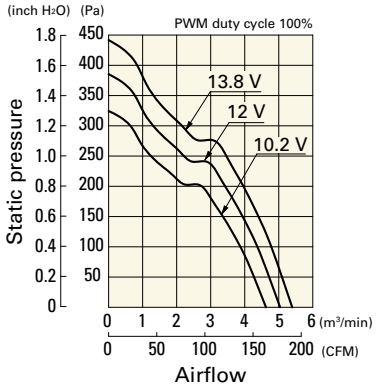

PWM duty - Speed characteristics example

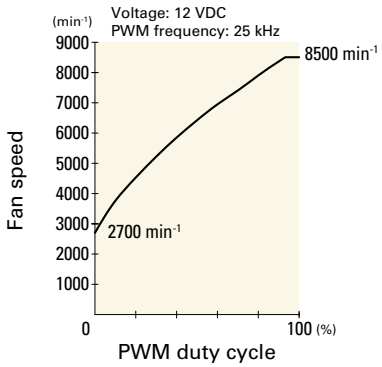

9GV0912P1F03 With pulse sensor with PWM control

PWM duty cycle

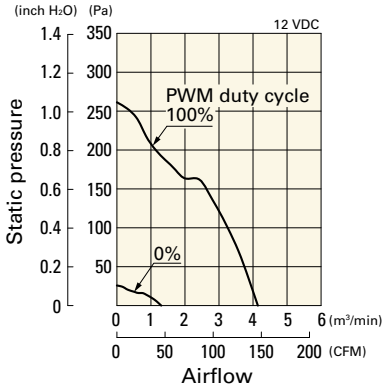

Operating voltage range

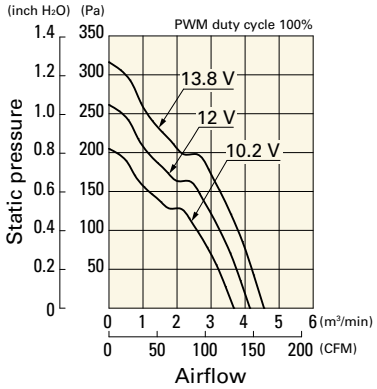

PWM duty - Speed characteristics example

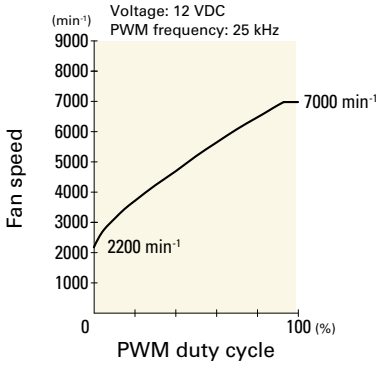

9GV0948P1H03 With pulse sensor with PWM control

PWM duty cycle

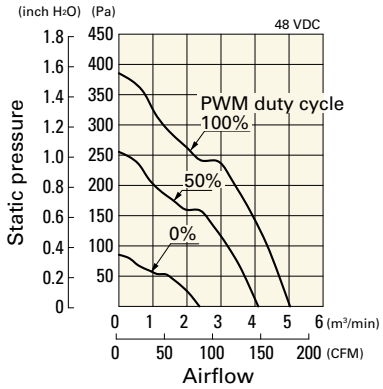

Operating voltage range

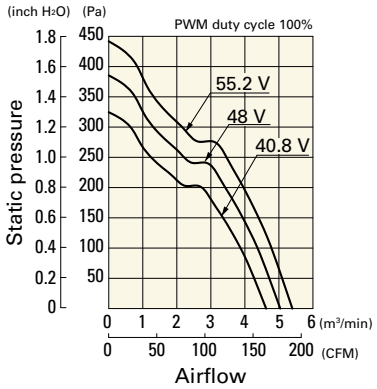

PWM duty - Speed characteristics example

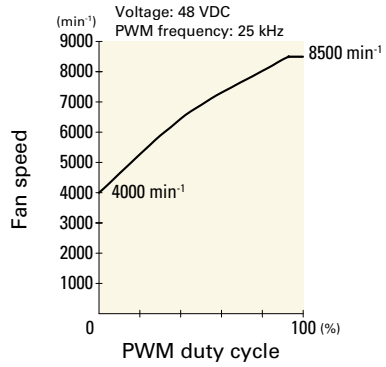

9GV0948P1F03 With pulse sensor with PWM control

PWM duty cycle

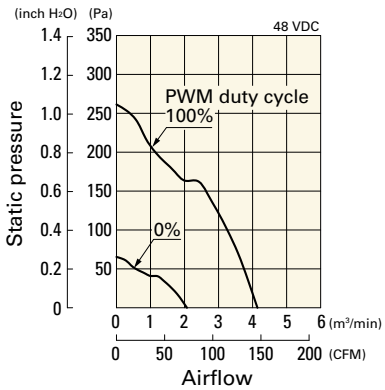

Operating voltage range

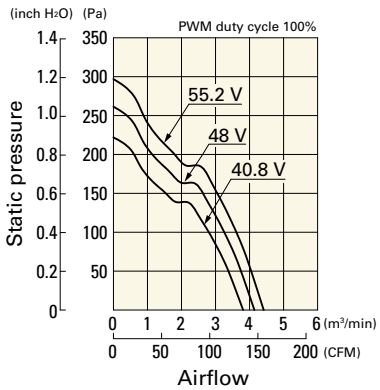

PWM duty - Speed characteristics example

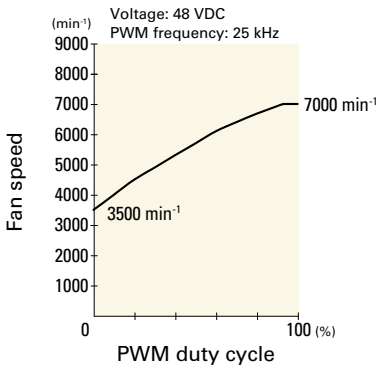

Dimensions (unit: mm) (With ribs)

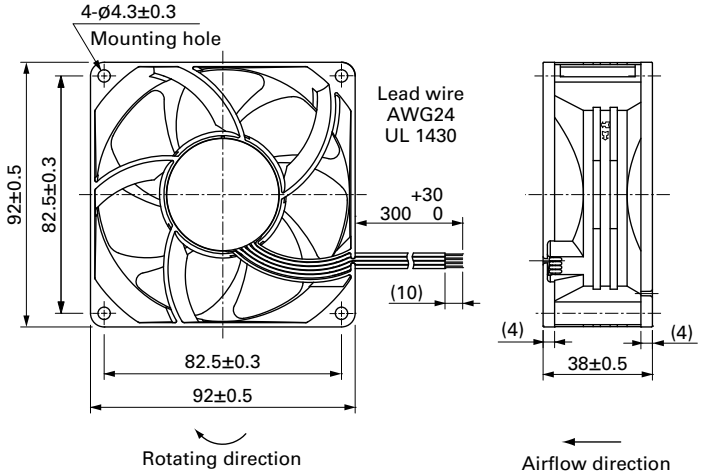

Reference Dimensions of Mounting Holes and Vent Opening (unit: mm)

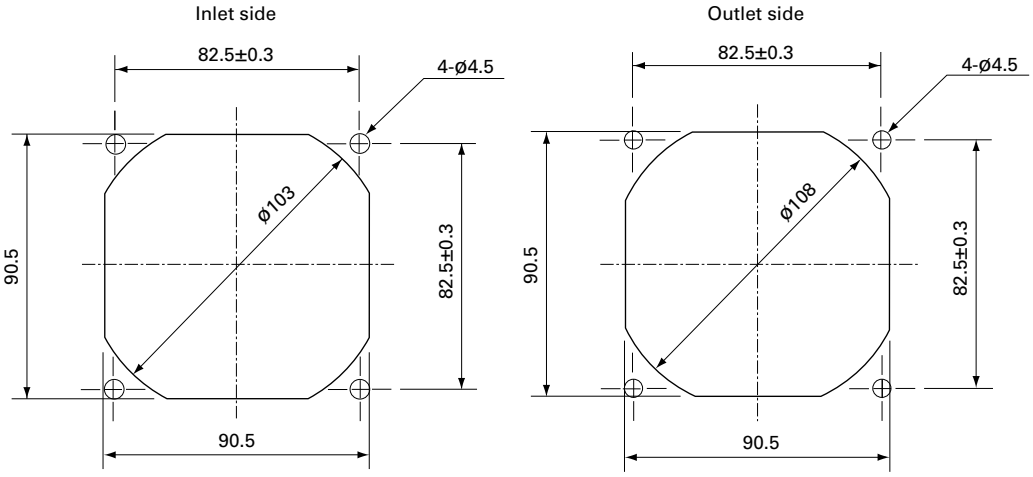

Options

Finger guards page: p. 591

Model no.: 109-099E, 109-099H

Resin finger guards page: p. 597

Model no.: 109-1001G

Resin filter kits page: p. 598

Model no.: 109-1001F13 (13PPI), 109-1001F20 (20PPI),
109-1001F30 (30PPI), 109-1001F40 (40PPI)

92×92×38 mm

San Ace 92 9RA type

General Specifications

- Material ..... Frame: Plastic (Flammability: UL 94V-0), Impeller: Plastic (Flammability: UL 94V-1)
- Expected life ..... See the table below. (L10 life: 90% survival rate for continuous operation in free air at 60˚C, rated voltage) Expected life at 40°C is for reference only.
- Motor protection function ..... Locked rotor burnout protection, Reverse polarity protection For details, please refer to p. 608.
- Dielectric strength ..... 50/60 Hz, 500 VAC, for 1 minute (between lead wire conductors and frame)
- Insulation resistance ..... 10 MΩ min. at 500 VDC (between lead wire conductors and frame)
- Sound pressure level (SPL) ..... A-weighted sound pressure level (SPL) at 1 m away from the air inlet.
- Storage temperature ..... -30 to +70˚C (Non-condensing)
- Lead wire ..... ⊕Red ⊖Black Sensor Yellow Control Brown (For models without PWM control, there is no speed control wiring.)
- Mass ..... 210 g

Specifications

The models listed below **have ribs and a pulse sensor with PWM control.** For models without ribs, append "1" to the end of model numbers.

Model no.	Rated voltage [V]	Operating voltage range [V]	PWM duty cycle* [%]	Rated current [A]	Rated input [W]	Rated speed [min⁻¹]	Max. airflow [m³/min]	Max. airflow [CFM]	Max. static pressure [Pa]	Max. static pressure [inchH₂O]	SPL [dB (A)]	Operating temperature [˚C]	Expected life [h]
9RA0912P1J001	12	10.8 to 13.2	100	1.24	14.9	6400	3.28	116	192	0.77	50	-20 to +70	40000/60˚C (70000/40˚C)
			20	0.07	0.8	1600	0.82	29	12.0	0.05	12		
9RA0912P1G001			100	0.96	11.5	5800	2.97	105	158	0.63	47		
			20	0.06	0.7	1400	0.72	25	9.2	0.04	10		
9RA0924P1J001	24	21.6 to 26.4	100	0.62	14.9	6400	3.28	116	192	0.77	50		
			20	0.07	1.7	2200	1.13	40	22.7	0.09	19		
9RA0924P1G001			100	0.48	11.5	5800	2.97	105	158	0.63	47		
			20	0.05	1.2	2000	1.02	36	18.8	0.08	17		
9RA0948P1J001	48	43.2 to 52.8	100	0.31	14.9	6400	3.28	116	192	0.77	50		
			20	0.03	1.4	2000	1.02	36	18.8	0.08	17		
9RA0948P1G001			100	0.25	12.0	5800	2.97	105	158	0.63	47		
			20	0.03	1.4	1700	0.87	31	13.6	0.05	13		

PWM frequency is 25 kHz. Models without ratings for 0% PWM duty cycle have zero speed at 0%. When control terminal is open, speed is the same as at 100% duty cycle.

The models listed below **have ribs and a pulse sensor.** For models without ribs, append "1" to the end of model numbers.

Model no.	Rated voltage [V]	Operating voltage range [V]	Rated current [A]	Rated input [W]	Rated speed [min⁻¹]	Max. airflow [m³/min]	Max. airflow [CFM]	Max. static pressure [Pa]	Max. static pressure [inchH₂O]	SPL [dB (A)]	Operating temperature [˚C]	Expected life [h]
9RA0912J1001	12	7 to 13.2	1.24	14.9	6400	3.28	116	192	0.77	50	-20 to +70	40000/60˚C (70000/40˚C)
9RA0912G1001		7 to 13.8	0.96	11.5	5800	2.97	105	158	0.63	47		
9RA0912H1001			0.52	6.2	4650	2.36	83	102	0.41	40		
9RA0924J1001	24	14 to 26.4	0.62	14.9	6400	3.28	116	192	0.77	50		
9RA0924G1001		14 to 27.6	0.48	11.5	5800	2.97	105	158	0.63	47		
9RA0924H1001			0.26	6.2	4650	2.36	83	102	0.41	40		
9RA0948J1001	48	36 to 52.8	0.31	14.9	6400	3.28	116	192	0.77	50		
9RA0948G1001		36 to 55.2	0.25	12.0	5800	2.97	105	158	0.63	47		
9RA0948H1001			0.14	6.7	4650	2.36	83	102	0.41	40		

Note 1: Sensor and control options are available for selection. Refer to the table on pp. 646 to 647.
Note 2: The » mark indicates Short LeadTime Service applicable models. See p. 664 for details.

Airflow - Static Pressure Characteristics / PWM Duty - Speed Characteristics Example

9RA0912P1J001 With pulse sensor with PWM control

PWM duty cycle

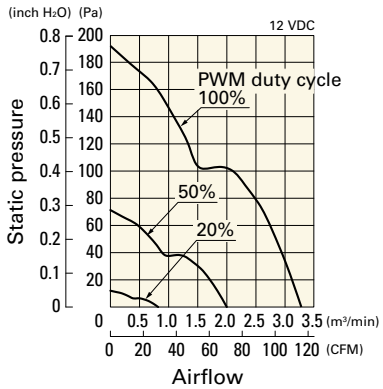

Operating voltage range

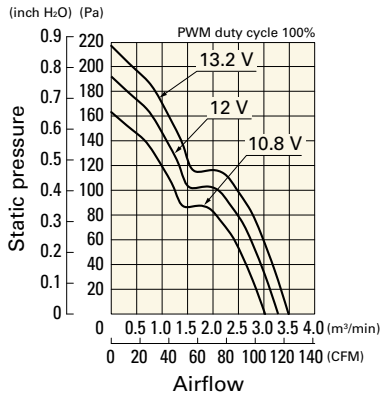

PWM duty - Speed characteristics example

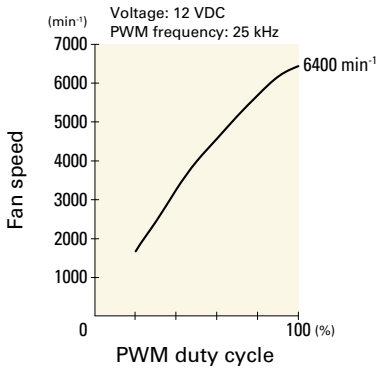

9RA0912P1G001 With pulse sensor with PWM control

PWM duty cycle

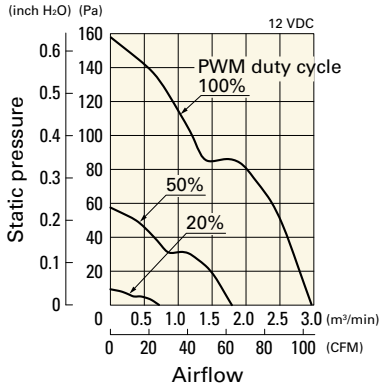

Operating voltage range

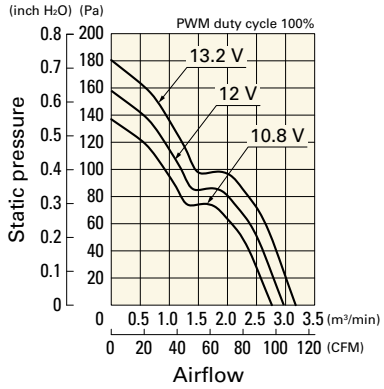

PWM duty - Speed characteristics example

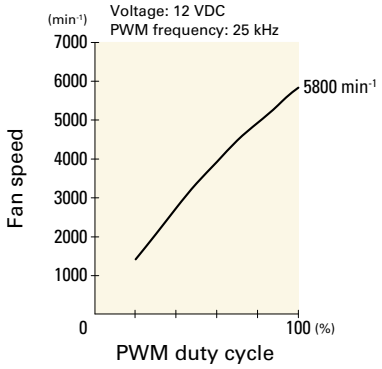

9RA0924P1J001 With pulse sensor with PWM control

PWM duty cycle

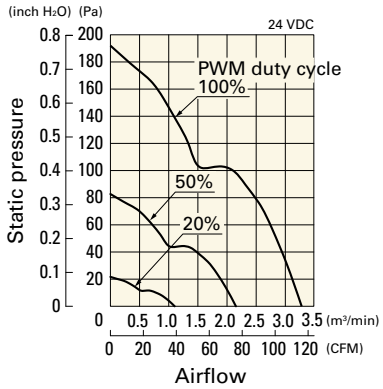

Operating voltage range

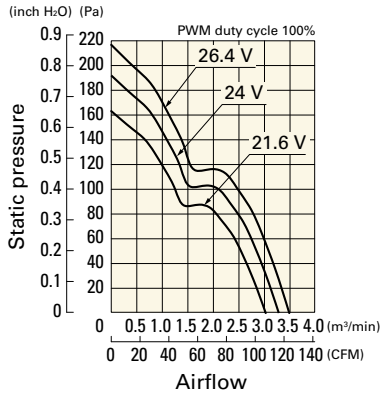

PWM duty - Speed characteristics example

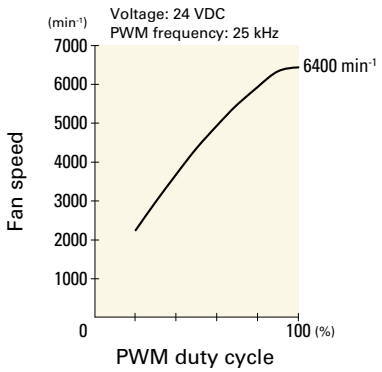

9RA0924P1G001 With pulse sensor with PWM control

PWM duty cycle

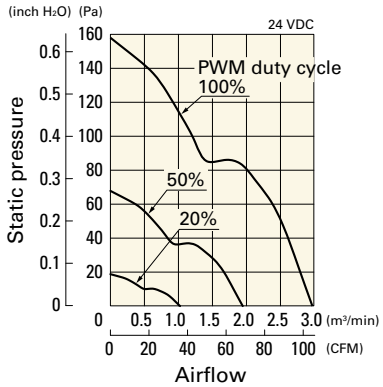

Operating voltage range

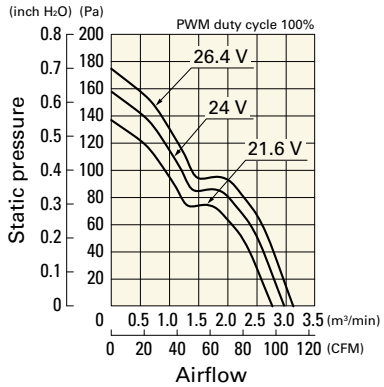

PWM duty - Speed characteristics example

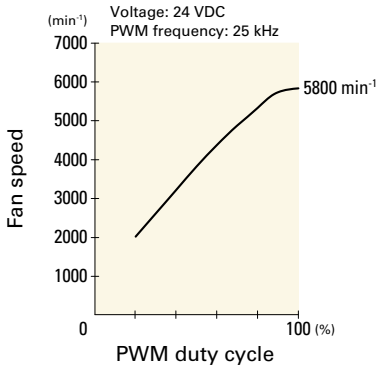

Airflow - Static Pressure Characteristics / PWM Duty - Speed Characteristics Example

9RA0948P1J001 With pulse sensor with PWM control

PWM duty cycle

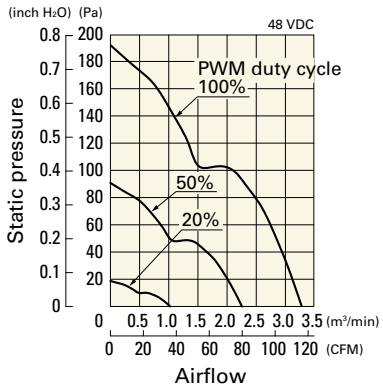

Operating voltage range

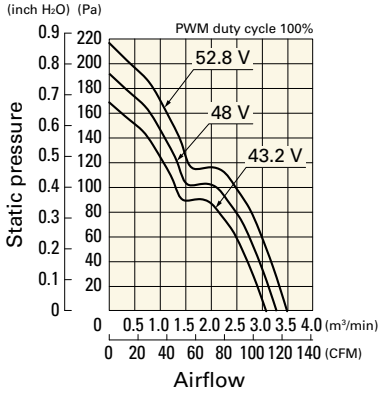

PWM duty - Speed characteristics example

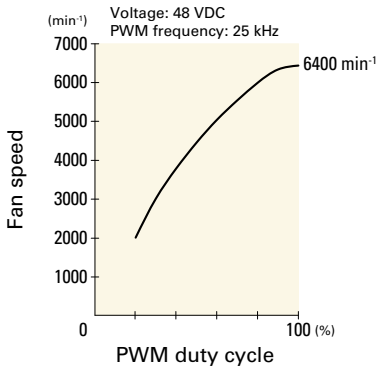

9RA0948P1G001 With pulse sensor with PWM control

PWM duty cycle

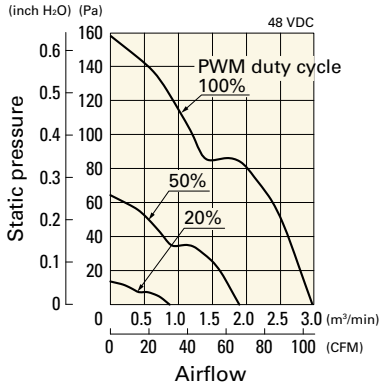

Operating voltage range

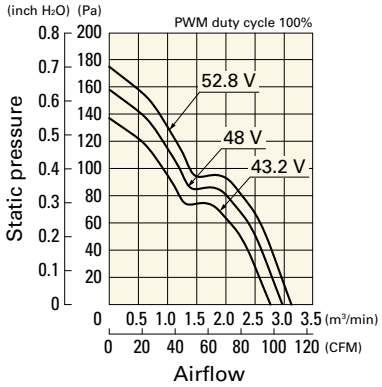

PWM duty - Speed characteristics example

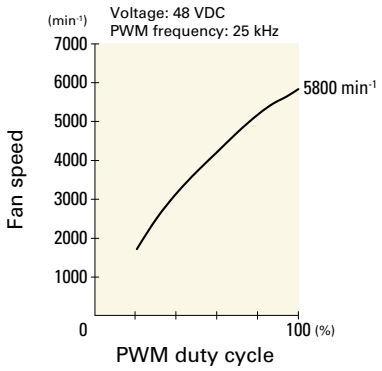

Airflow - Static Pressure Characteristics

9RA0912J1001 With pulse sensor

Operating voltage range

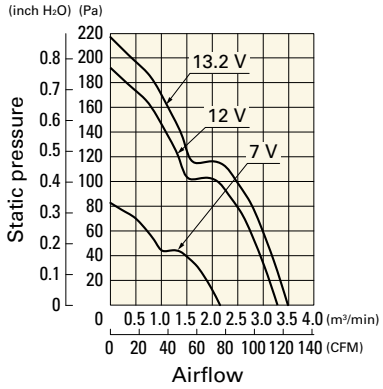

9RA0912G1001 With pulse sensor

Operating voltage range

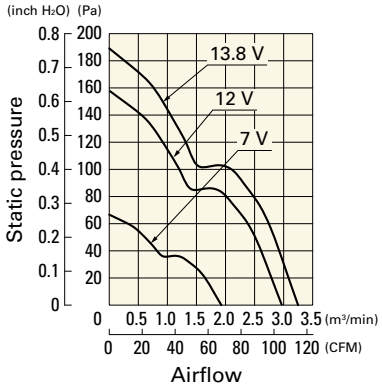

9RA0912H1001 With pulse sensor

Operating voltage range

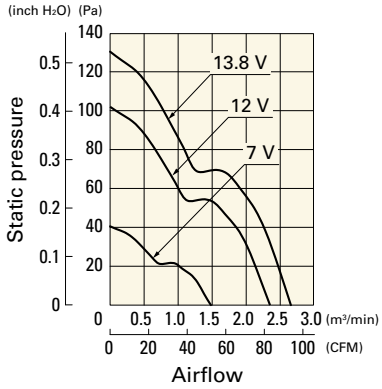

Airflow - Static Pressure Characteristics

9RA0924J1001 With pulse sensor

Operating voltage range

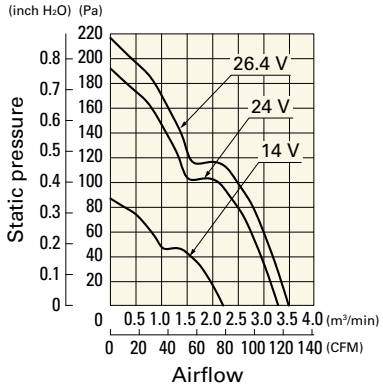

9RA0924G1001 With pulse sensor

Operating voltage range

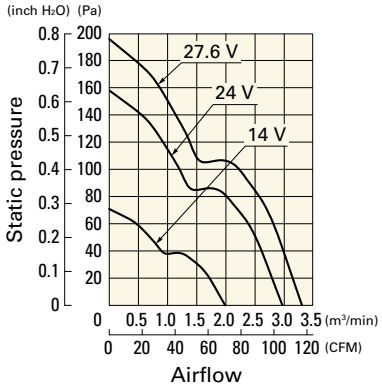

9RA0924H1001 With pulse sensor

Operating voltage range

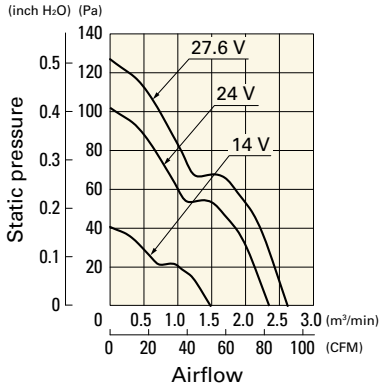

9RA0948J1001 With pulse sensor

Operating voltage range

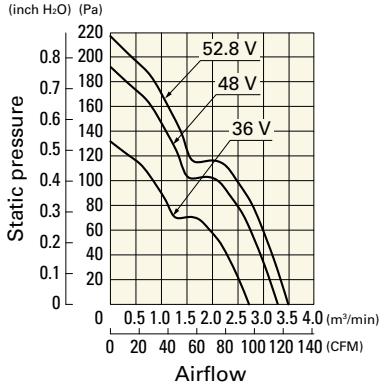

9RA0948G1001 With pulse sensor

Operating voltage range

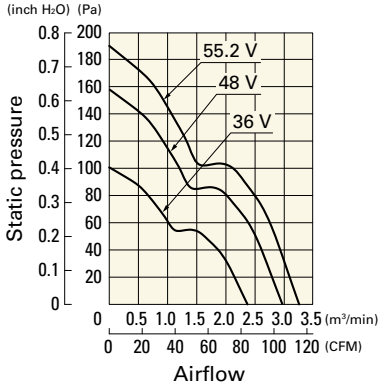

9RA0948H1001 With pulse sensor

Operating voltage range

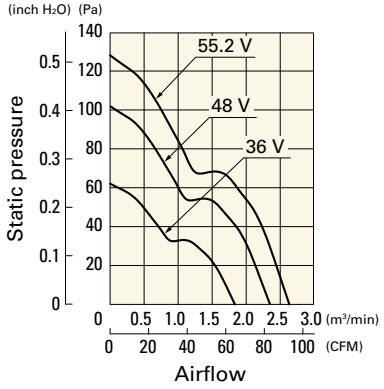

Dimensions (unit: mm) (Ribbed frame with pulse sensor with PWM control)

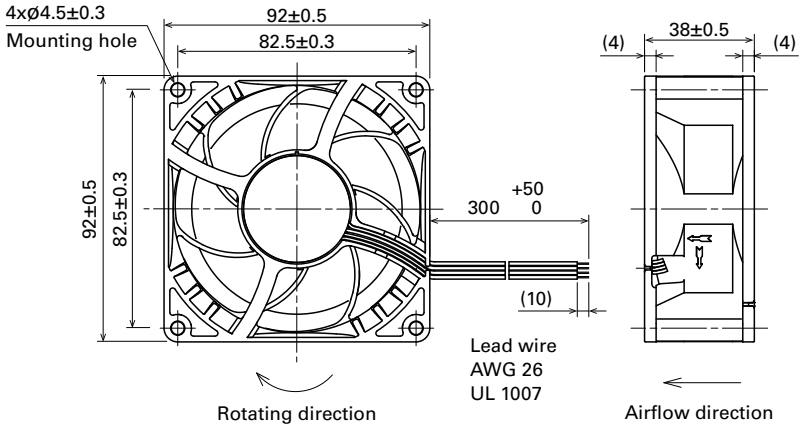

Reference Dimensions of Mounting Holes and Vent Opening (unit: mm)

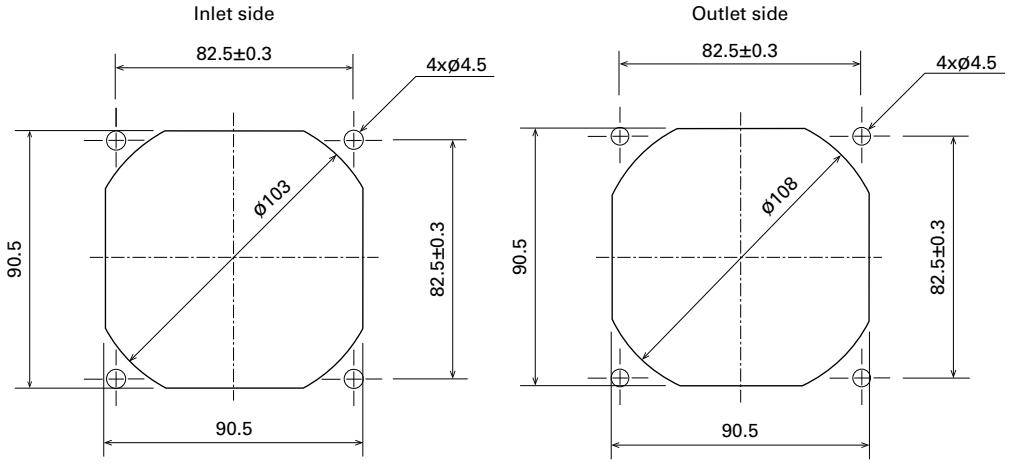

Options

Finger guards page: p. 591

Model no.: 109-099E, 109-099H

Resin filter kits page: p. 598

Model no.: 109-1001F13 (13PPI), 109-1001F20 (20PPI),
109-1001F30 (30PPI), 109-1001F40 (40PPI)

Resin finger guards page: p. 597

Model no.: 109-1001G

DC Fan

120×120×25 mm

San Ace 120 9GA type Low Power Consumption Fan

General Specifications

- Material ..... Frame: Plastic (Flammability: UL 94V-0), Impeller: Plastic (Flammability: UL 94V-0)
- Expected life ..... See the table below. (L10 life: 90% survival rate for continuous operation in free air at 60˚C, rated voltage) Expected life at 40°C is for reference only.
- Motor protection function ..... Locked rotor burnout protection, Reverse polarity protection For details, please refer to p. 608.
- Dielectric strength ..... 50/60 Hz, 500 VAC, for 1 minute (between lead wire conductors and frame)
- Insulation resistance ..... 10 MΩ min. at 500 VDC (between lead wire conductors and frame)
- Sound pressure level (SPL) ..... A-weighted sound pressure level (SPL) at 1 m away from the air inlet.
- Storage temperature ..... -30 to +70˚C (Non-condensing)
- Lead wire ..... ⊕Red ⊖Black Sensor Yellow Control Brown (For models without PWM control, there is no speed control wiring.)
- Mass ..... 280 g

Specifications

The models listed below **have ribs and a pulse sensor with PWM control.** For models without ribs, append "1" to the end of model numbers.

Model no.	Rated voltage [V]	Operating voltage range [V]	PWM duty cycle* [%]	Rated current [A]	Rated input [W]	Rated speed [min⁻¹]	Max. airflow [m³/min]	Max. airflow [CFM]	Max. static pressure [Pa]	Max. static pressure [inchH₂O]	SPL [dB (A)]	Operating temperature [˚C]	Expected life [h]
9GA1212P4G001	12	10.2 to 13.8	100	0.93	11.16	6400	3.8	134	365	1.47	57	-20 to +70	40000/60˚C (70000/40˚C)
			25	0.16	1.92	2550	1.5	53	60	0.24	34		
9GA1212P4S001			100	0.61	7.32	5400	3.2	113	260	1.04	54		
			25	0.16	1.92	2550	1.5	53	60	0.24	34		
9GA1224P4G001	24	20.4 to 27.6	100	0.47	11.28	6400	3.8	134	365	1.47	57		
			25	0.1	2.4	2550	1.5	53	60	0.24	34		
9GA1224P4S001			100	0.31	7.44	5400	3.2	113	260	1.04	54		
			25	0.1	2.4	2550	1.5	53	60	0.24	34		
9GA1248P4G001	48	40.8 to 53	100	0.24	11.52	6400	3.8	134	365	1.47	57		
			25	0.08	3.84	2550	1.5	53	60	0.24	34		
9GA1248P4S001			100	0.16	7.68	5400	3.2	113	260	1.04	54		
			25	0.08	3.84	2550	1.5	53	60	0.24	34		

PWM frequency is 25 kHz. Models without ratings for 0% PWM duty cycle have zero speed at 0%. When control terminal is open, speed is the same as at 100% duty cycle.

The models listed below **have ribs and a pulse sensor.** For models without ribs, append "1" to the end of model numbers.

Model no.	Rated voltage [V]	Operating voltage range [V]	Rated current [A]	Rated input [W]	Rated speed [min⁻¹]	Max. airflow [m³/min]	Max. airflow [CFM]	Max. static pressure [Pa]	Max. static pressure [inchH₂O]	SPL [dB (A)]	Operating temperature [˚C]	Expected life [h]
9GA1212G4001	12	7 to 13.8	0.93	11.16	6400	3.8	134	365	1.47	57	-20 to +70	40000/60˚C (70000/40˚C)
9GA1212S4001			0.61	7.32	5400	3.2	113	260	1.04	54		
9GA1224G4001	24	14 to 27.6	0.47	11.28	6400	3.8	134	365	1.47	57		
9GA1224S4001			0.31	7.44	5400	3.2	113	260	1.04	54		
9GA1248G4001	48	36 to 53	0.24	11.52	6400	3.8	134	365	1.47	57		
9GA1248S4001			0.16	7.68	5400	3.2	113	260	1.04	54		

Note 1: Sensor and control options are available for selection. Refer to the table on p. 640.
Note 2: The mark indicates Short LeadTime Service applicable models. See p. 664 for details.

Airflow - Static Pressure Characteristics / PWM Duty - Speed Characteristics Example

9GA1212P4G001 With pulse sensor with PWM control

PWM duty cycle

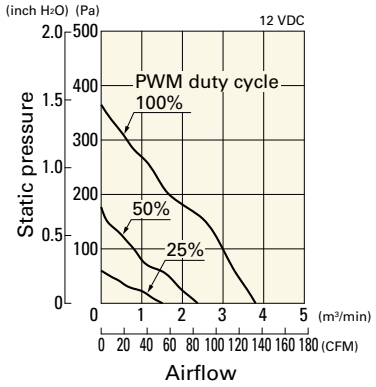

Operating voltage range

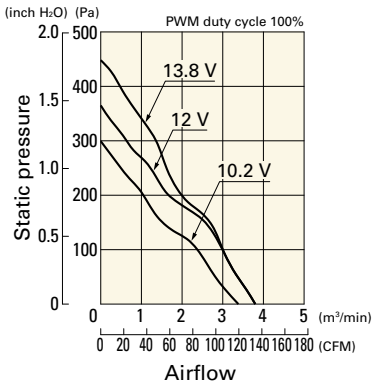

PWM duty - Speed characteristics example

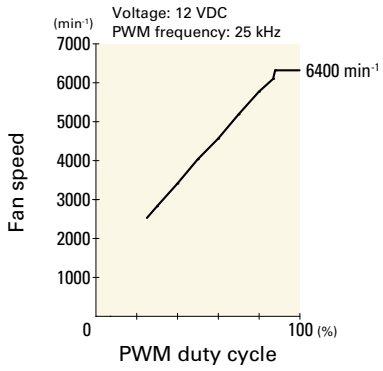

9GA1212P4S001 With pulse sensor with PWM control

PWM duty cycle

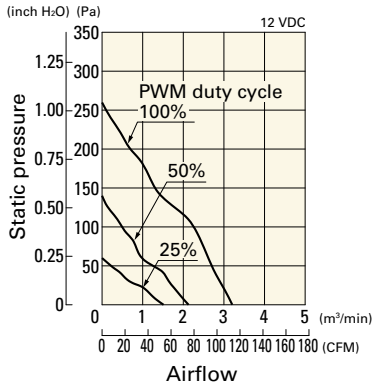

Operating voltage range

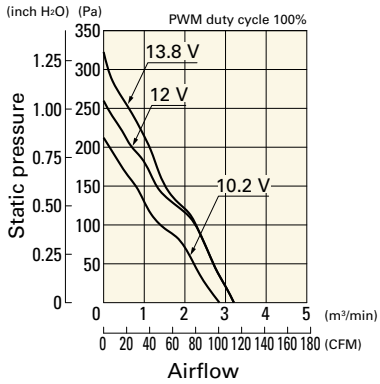

PWM duty - Speed characteristics example

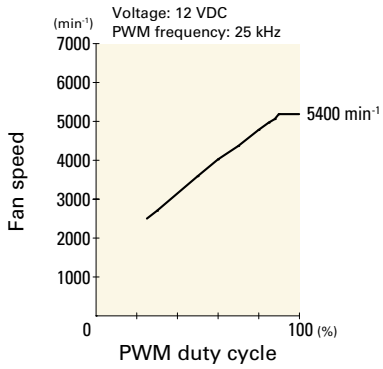

9GA1224P4G001 With pulse sensor with PWM control

PWM duty cycle

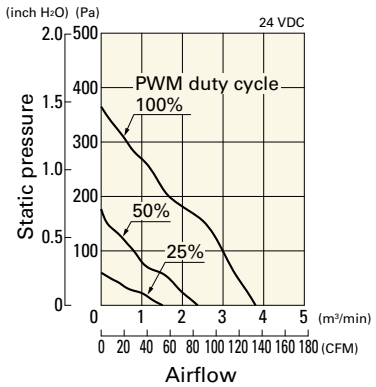

Operating voltage range

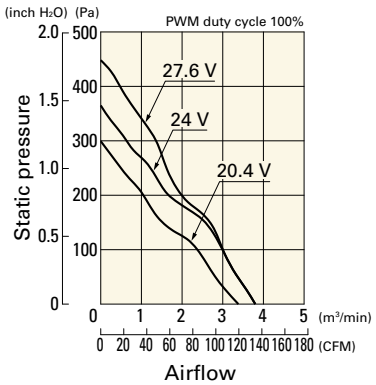

PWM duty - Speed characteristics example

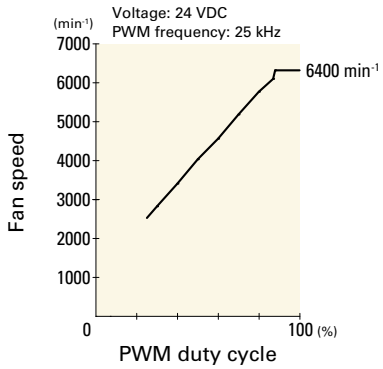

9GA1224P4S001 With pulse sensor with PWM control

PWM duty cycle

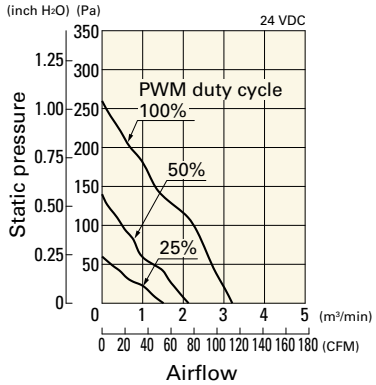

Operating voltage range

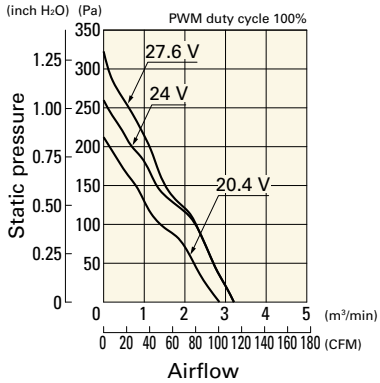

PWM duty - Speed characteristics example

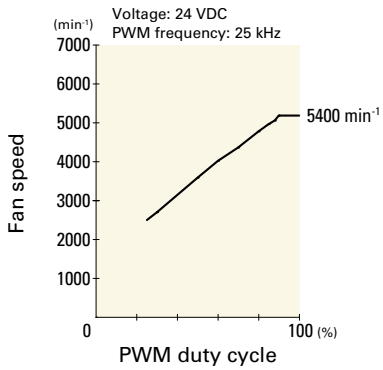

Airflow - Static Pressure Characteristics / PWM Duty - Speed Characteristics Example

9GA1248P4G001 With pulse sensor with PWM control

PWM duty cycle

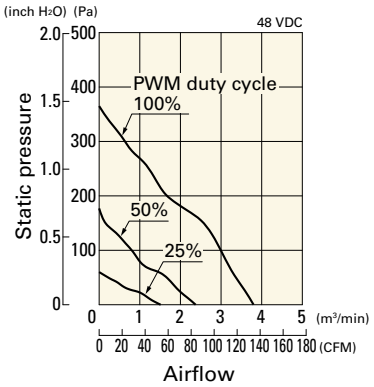

Operating voltage range

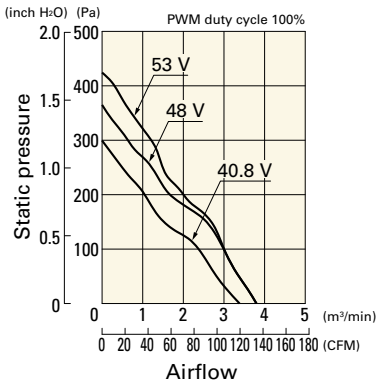

PWM duty - Speed characteristics example

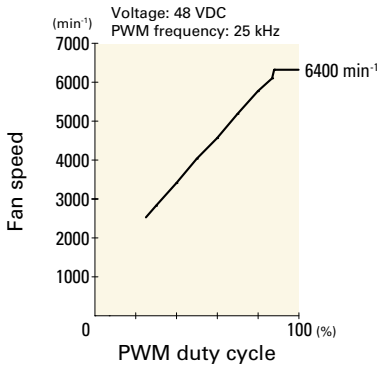

9GA1248P4S001 With pulse sensor with PWM control

PWM duty cycle

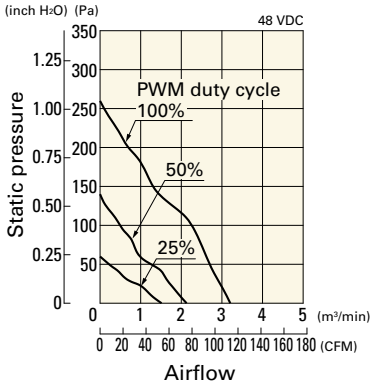

Operating voltage range

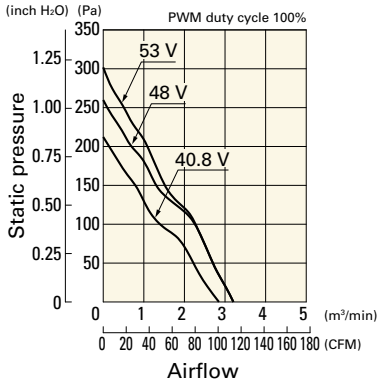

PWM duty - Speed characteristics example

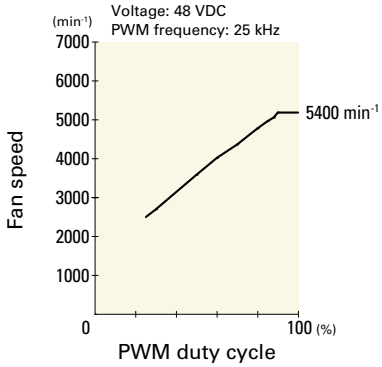

Airflow - Static Pressure Characteristics

9GA1212G4001 With pulse sensor

Operating voltage range

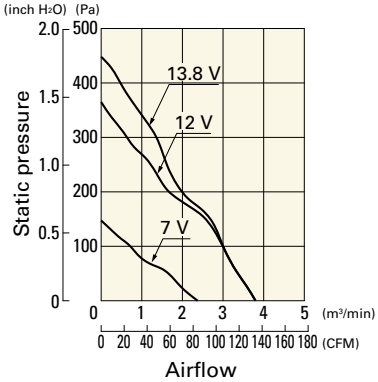

9GA1212S4001 With pulse sensor

Operating voltage range

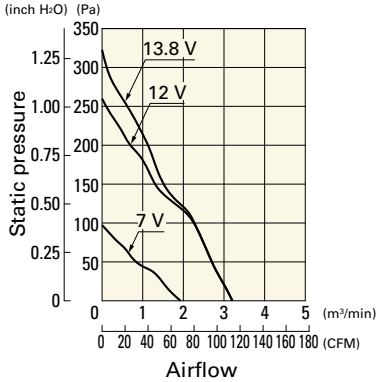

9GA1224G4001 With pulse sensor

Operating voltage range

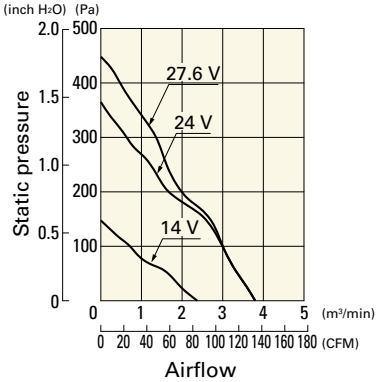

Airflow - Static Pressure Characteristics

9GA1224S4001 With pulse sensor

Operating voltage range

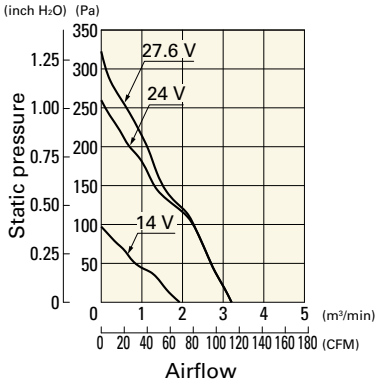

9GA1248G4001 With pulse sensor

Operating voltage range

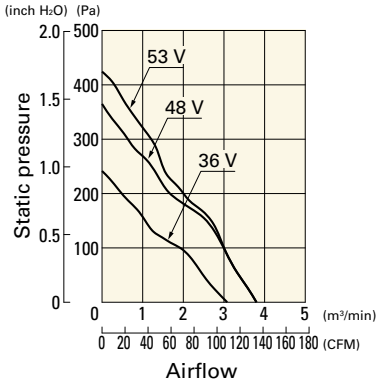

9GA1248S4001 With pulse sensor

Operating voltage range

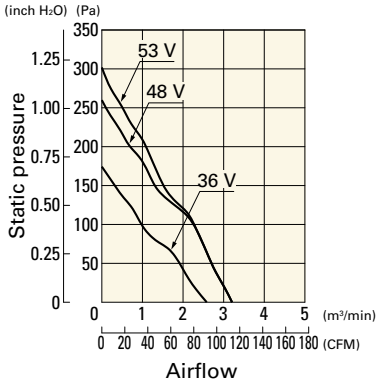

Dimensions (unit: mm) (Ribbed frame with pulse sensor with PWM control)

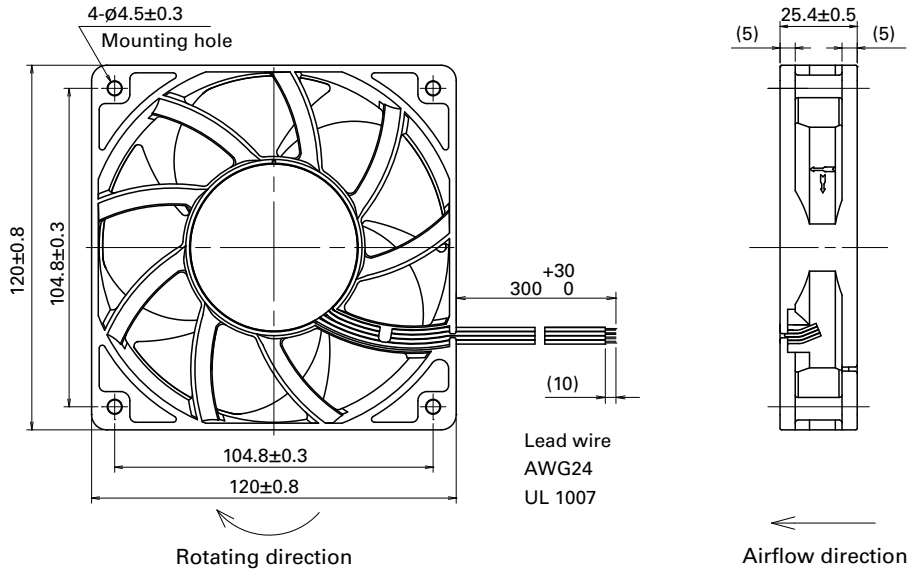

Reference Dimensions of Mounting Holes and Vent Opening (unit: mm)

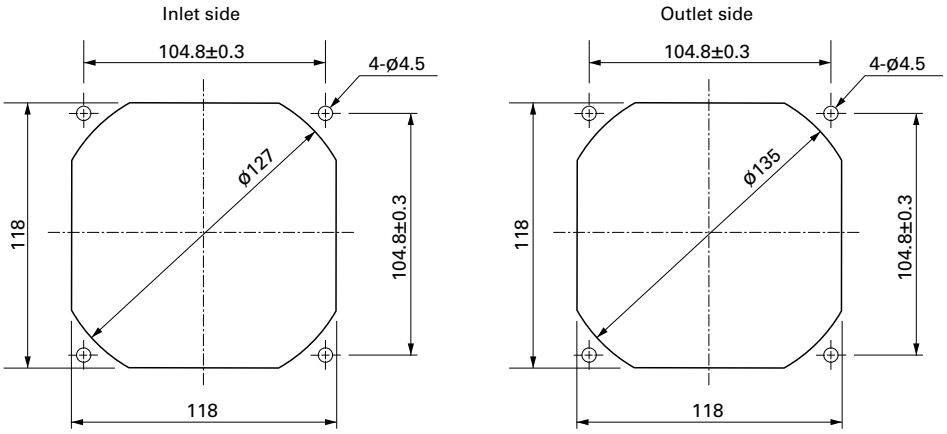

Options

Finger guards page: p. 591

Model no.: 109-019E, 109-019K

Resin finger guards page: p. 597

Model no.: 109-1000G

Resin filter kits page: p. 598

Model no.: 109-1000F13 (13PPI), 109-1000F20 (20PPI),
109-1000F30 (30PPI), 109-1000F40 (40PPI)

DC Fan

120×120×25 mm

San Ace 120 9GV type

General Specifications

- Material ..... Frame: Plastic (Flammability: UL 94V-0), Impeller: Plastic (Flammability: UL 94V-1)
- Expected life ..... See the table below. (L10 life: 90% survival rate for continuous operation in free air at 60˚C, rated voltage) Expected life at 40°C is for reference only.
- Motor protection function ..... Locked rotor burnout protection, Reverse polarity protection For details, please refer to p. 608.
- Dielectric strength ..... 50/60 Hz, 500 VAC, for 1 minute (between lead wire conductors and frame)
- Insulation resistance ..... 10 MΩ min. at 500 VDC (between lead wire conductors and frame)
- Sound pressure level (SPL) ..... A-weighted sound pressure level (SPL) at 1 m away from the air inlet.
- Storage temperature ..... -30 to +70˚C (Non-condensing)
- Lead wire ..... ⊕Red ⊖Black Sensor Yellow Control Brown
- Mass ..... 260 g

Specifications

The models listed below **have ribs and a pulse sensor with PWM control.** For models without ribs, append "1" to the end of model numbers.

Model no.	Rated voltage [V]	Operating voltage range [V]	PWM duty cycle* [%]	Rated current [A]	Rated input [W]	Rated speed [min⁻¹]	Max. airflow [m³/min]	Max. airflow [CFM]	Max. static pressure [Pa]	Max. static pressure [inchH₂O]	SPL [dB (A)]	Operating temperature [˚C]	Expected life [h]
9GV1212P4G01	12	10.2 to 13.8	100	1.68	20.16	5100	4.83	171	224	0.9	58	-20 to +70	40000/60˚C (70000/40˚C)
			0	0.18	2.16	1650	1.56	55.1	23.5	0.09	30		
9GV1224P4G01	24	20.4 to 27.6	100	0.84	20.16	5100	4.83	171	224	0.9	58		
			0	0.13	3.12	1650	1.56	55.1	23.5	0.09	30		
9GV1248P4J01	48	40.8 to 55.2	100	0.5	24.0	5400	5.11	180	251	1.01	59		
			0	0.15	7.2	3000	2.84	100	77.5	0.31	47		
9GV1248P4G01		40.8 to 60.0	100	0.42	20.16	5100	4.83	171	224	0.9	58		
			0	0.07	3.36	1650	1.56	55.1	23.5	0.09	30		
9GV1248P4H01			100	0.33	15.84	4600	4.35	154	182	0.73	55		
			0	0.07	3.36	1650	1.56	55.1	23.5	0.09	30		

PWM frequency is 25 kHz. Models without ratings for 0% PWM duty cycle have zero speed at 0%. When control terminal is open, speed is the same as at 100% duty cycle.

Note: Sensor and control options are available for selection. Refer to the table on pp. 641 to 642.

Airflow - Static Pressure Characteristics / PWM Duty - Speed Characteristics Example

9GV1212P4G01 With pulse sensor with PWM control

PWM duty cycle

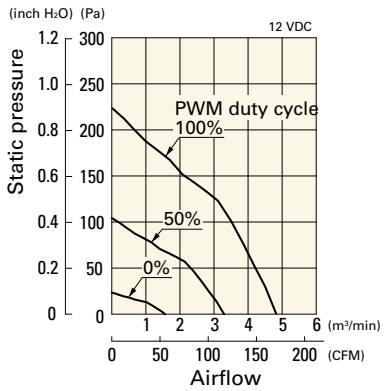

Operating voltage range

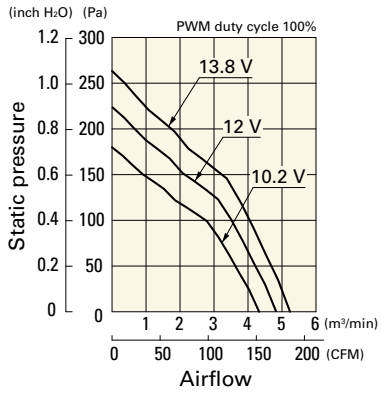

PWM duty - Speed characteristics example

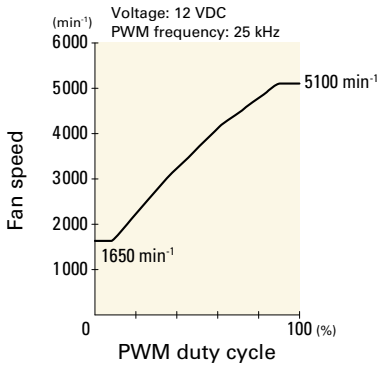

Airflow - Static Pressure Characteristics / PWM Duty - Speed Characteristics Example

9GV1224P4G01 With pulse sensor with PWM control

PWM duty cycle

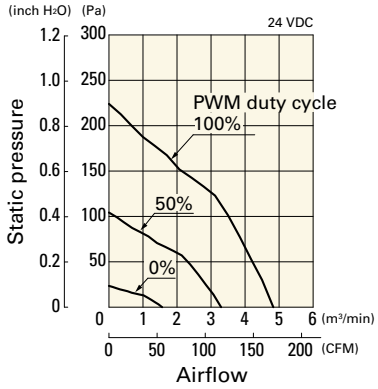

Operating voltage range

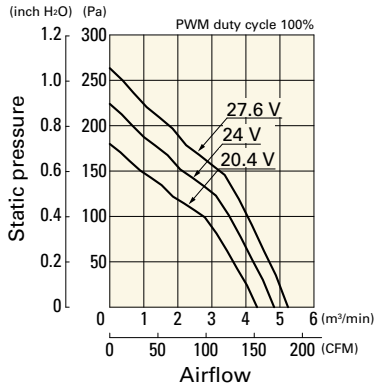

PWM duty - Speed characteristics example

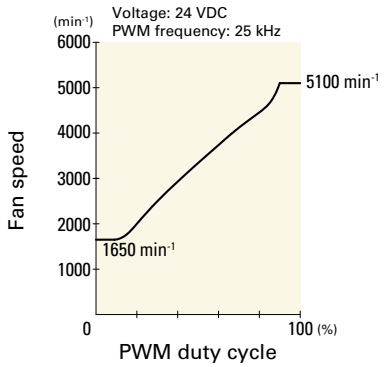

9GV1248P4J01 With pulse sensor with PWM control

PWM duty cycle

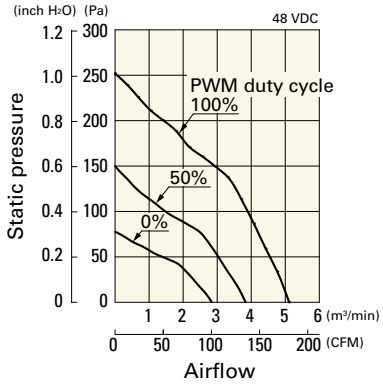

Operating voltage range

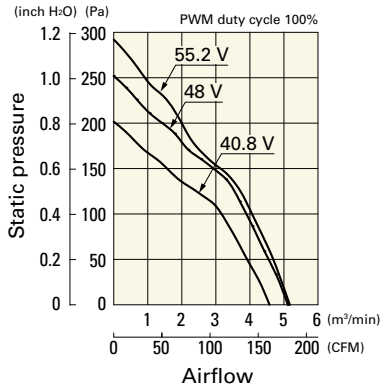

PWM duty - Speed characteristics example

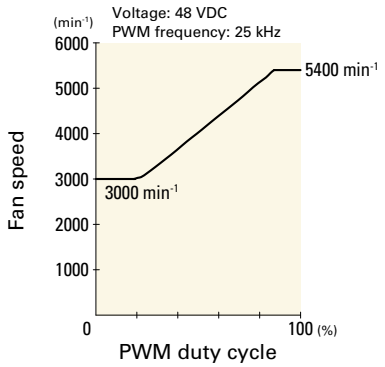

9GV1248P4G01 With pulse sensor with PWM control

PWM duty cycle

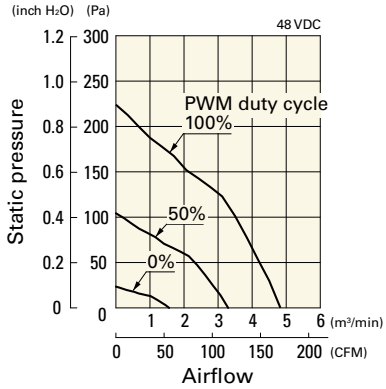

Operating voltage range

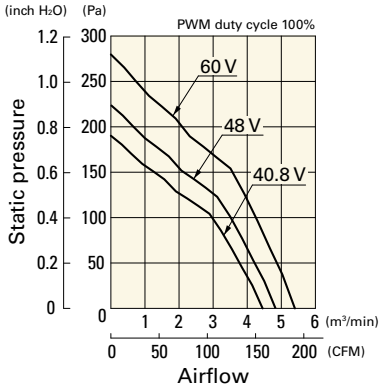

PWM duty - Speed characteristics example

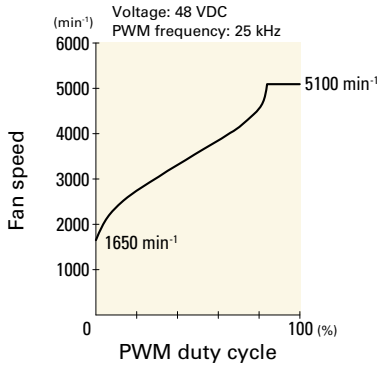

9GV1248P4H01 With pulse sensor with PWM control

PWM duty cycle

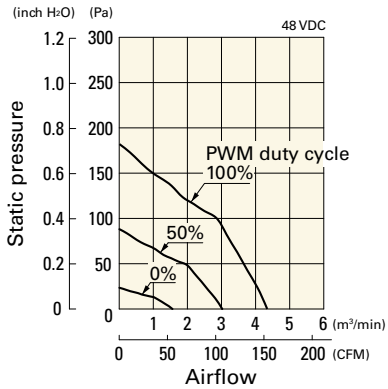

Operating voltage range

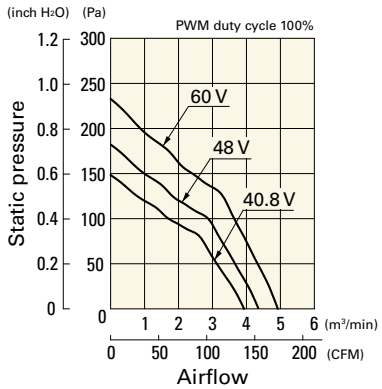

PWM duty - Speed characteristics example

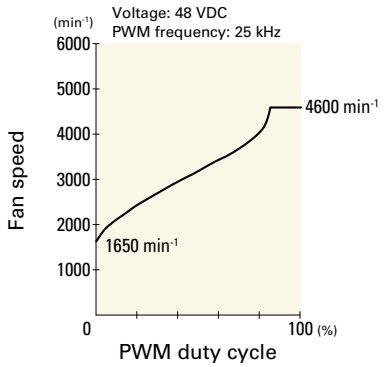

Dimensions (unit: mm) (With ribs)

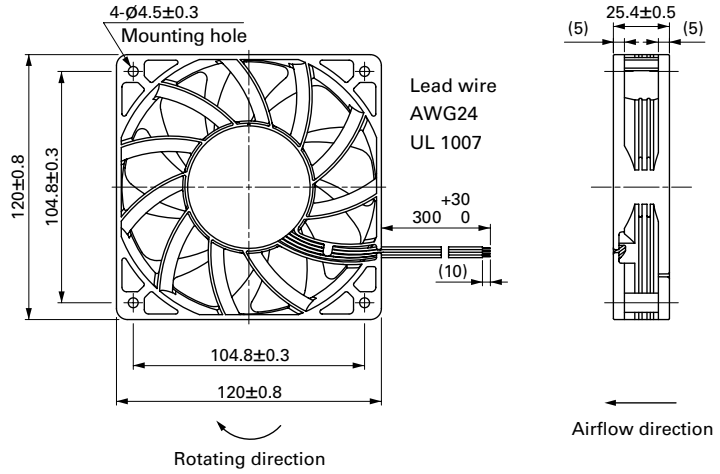

Reference Dimensions of Mounting Holes and Vent Opening (unit: mm)

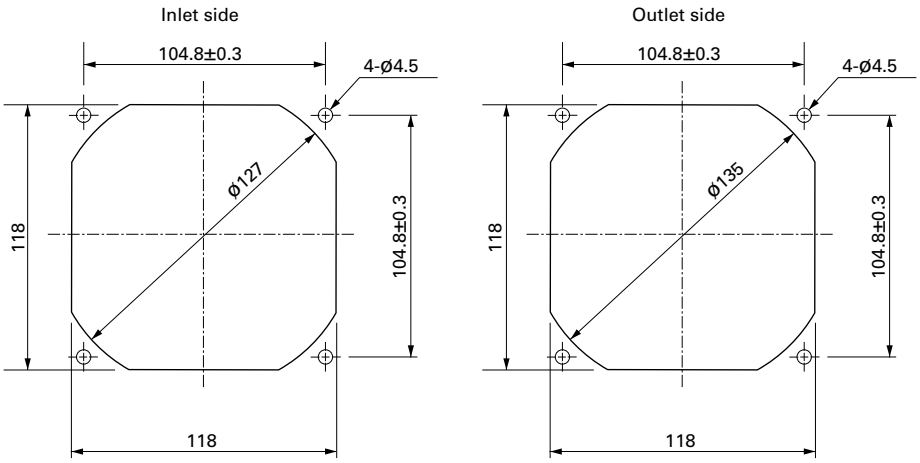

Options

Finger guards page: p. 591

Model no.: 109-019E, 109-019K

Resin finger guards page: p. 597

Model no.: 109-1000G

Resin filter kits page: p. 598

Model no.: 109-1000F13 (13PPI), 109-1000F20 (20PPI),
109-1000F30 (30PPI), 109-1000F40 (40PPI)

120×120×25 mm

San Ace 120 9RA type

General Specifications

- Material ..... Frame: Plastic (Flammability: UL 94V-0), Impeller: Plastic (Flammability: UL 94V-1)
- Expected life ..... See the table below. (L10 life: 90% survival rate for continuous operation in free air at 60˚C, rated voltage) Expected life at 40°C is for reference only.
- Motor protection function ..... Locked rotor burnout protection, Reverse polarity protection For details, please refer to p. 608.
- Dielectric strength ..... 50/60 Hz, 500 VAC, for 1 minute (between lead wire conductors and frame)
- Insulation resistance ..... 10 MΩ min. at 500 VDC (between lead wire conductors and frame)
- Sound pressure level (SPL) ..... A-weighted sound pressure level (SPL) at 1 m away from the air inlet.
- Storage temperature ..... -30 to +70˚C (Non-condensing)
- Lead wire ..... ⊕Red ⊖Black Sensor Yellow Control Brown (For models without PWM control, there is no speed control wiring.)
- Mass ..... 210 g

Specifications

The models listed below **have ribs and a pulse sensor with PWM control.** For models without ribs, append "1" to the end of model numbers.

Model no.	Rated voltage [V]	Operating voltage range [V]	PWM duty cycle* [%]	Rated current [A]	Rated input [W]	Rated speed [min⁻¹]	Max. airflow [m³/min]	Max. airflow [CFM]	Max. static pressure [Pa]	Max. static pressure [inchH₂O]	SPL [dB (A)]	Operating temperature [˚C]	Expected life [h]
9RA1212P4G001	12	10.8 to 13.2	100	0.55	6.6	4500	3.68	130	120	0.48	47	-20 to +70	60000/60˚C (90000/40˚C)
			20	0.06	0.72	1250	1.02	36	9.2	0.037	15		
9RA1224P4G001	24	21.6 to 26.4	100	0.28	6.72	4500	3.68	130	120	0.48	47		
			20	0.05	1.2	1750	1.43	50.5	18.1	0.073	22		
9RA1248P4G001	48	43.2 to 52.8	100	0.15	7.2	4500	3.68	130	120	0.48	47		
			20	0.03	1.44	1650	1.34	47.3	16.1	0.065	21		

PWM frequency is 25 kHz. Models without ratings for 0% PWM duty cycle have zero speed at 0%. When control terminal is open, speed is the same as at 100% duty cycle.

The models listed below **have ribs and a pulse sensor.** For models without ribs, append "1" to the end of model numbers.

Model no.	Rated voltage [V]	Operating voltage range [V]	Rated current [A]	Rated input [W]	Rated speed [min⁻¹]	Max. airflow [m³/min]	Max. airflow [CFM]	Max. static pressure [Pa]	Max. static pressure [inchH₂O]	SPL [dB (A)]	Operating temperature [˚C]	Expected life [h]
9RA1212G4001	12	7 to 13.8	0.55	6.6	4500	3.68	130	120	0.48	47	-20 to +70	60000/60˚C (90000/40˚C)
9RA1212E4001			0.41	4.92	4000	3.3	116.5	96	0.386	45		
9RA1212A4001			0.3	3.6	3500	2.86	101.1	73	0.293	42		
9RA1212H4001			0.26	3.12	3200	2.62	92.4	61	0.245	39		
9RA1212F4001			0.17	2.04	2700	2.2	77.6	43	0.172	35		
9RA1212M4001			0.12	1.44	2200	1.8	63.5	29	0.116	28		
9RA1224G4001	24	14 to 27.6	0.28	6.72	4500	3.68	130	120	0.48	47		
9RA1224E4001			0.22	5.28	4000	3.3	116.5	96	0.386	45		
9RA1224A4001			0.16	3.84	3500	2.86	101.1	73	0.293	42		
9RA1224H4001			0.13	3.12	3200	2.62	92.4	61	0.245	39		
9RA1224M4001			0.07	1.68	2200	1.8	63.5	29	0.116	28		
9RA1248G4001	48	36 to 55.2	0.15	7.2	4500	3.68	130	120	0.48	47		
9RA1248E4001			0.11	5.28	4000	3.3	116.5	96	0.386	45		
9RA1248A4001			0.09	4.32	3500	2.86	101.1	73	0.293	42		

Note 1: Sensor and control options are available for selection. Refer to the table on pp. 647 to 648.
Note 2: The » mark indicates Short LeadTime Service applicable models. See p. 664 for details.

Airflow - Static Pressure Characteristics / PWM Duty - Speed Characteristics Example

9RA1212P4G001 With pulse sensor with PWM control

PWM duty cycle

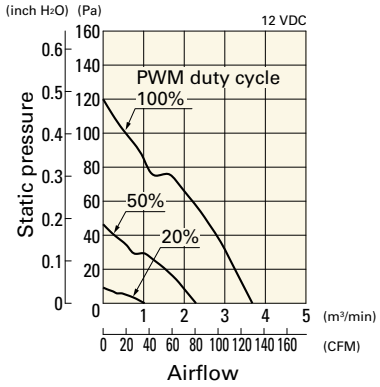

Operating voltage range

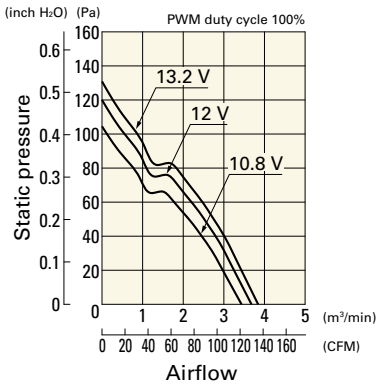

PWM duty - Speed characteristics example

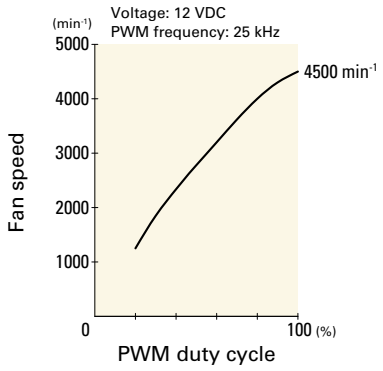

9RA1224P4G001 With pulse sensor with PWM control

PWM duty cycle

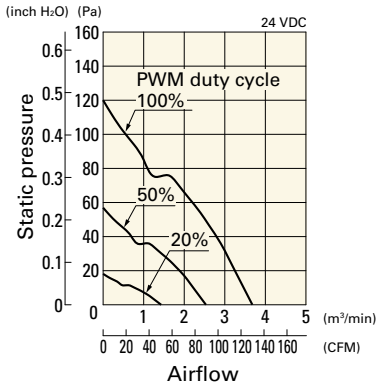

Operating voltage range

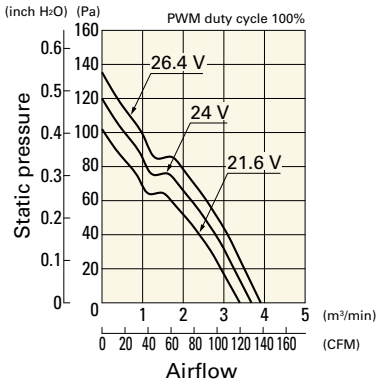

PWM duty - Speed characteristics example

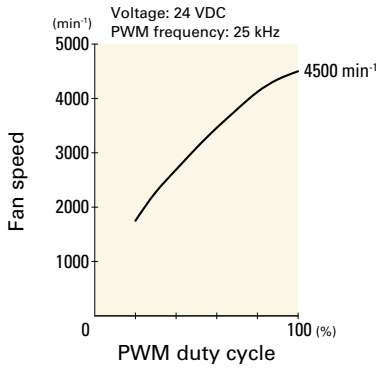

9RA1248P4G001 With pulse sensor with PWM control

PWM duty cycle

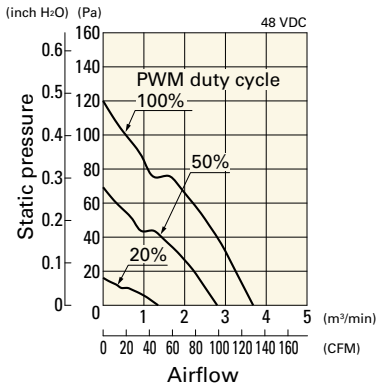

Operating voltage range

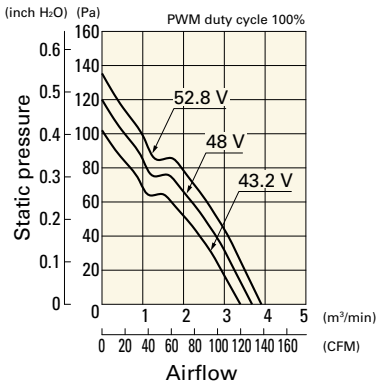

PWM duty - Speed characteristics example

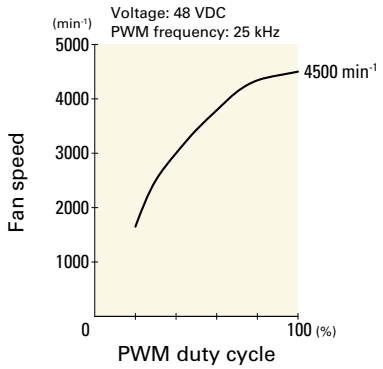

Airflow - Static Pressure Characteristics

9RA1212G4001 With pulse sensor

Operating voltage range

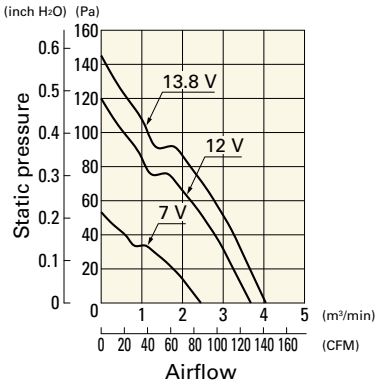

9RA1212E4001 With pulse sensor

Operating voltage range

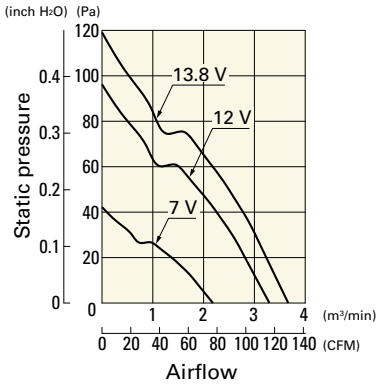

9RA1212A4001 With pulse sensor

Operating voltage range

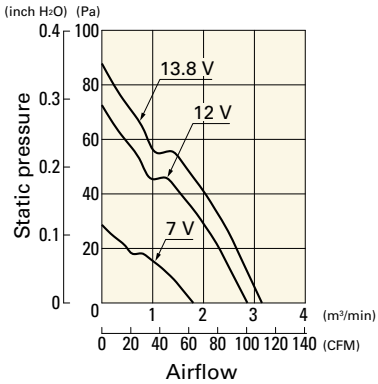

9RA1212H4001 With pulse sensor

Operating voltage range

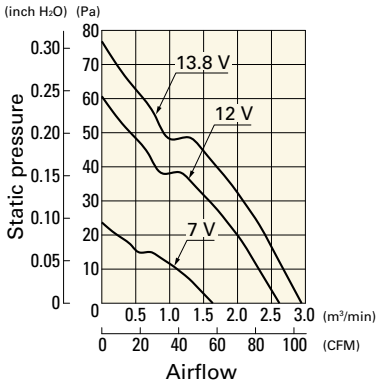

9RA1212F4001 With pulse sensor

Operating voltage range

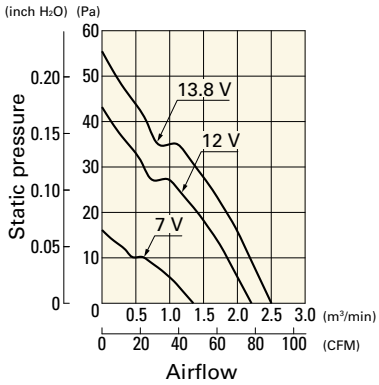

9RA1212M4001 With pulse sensor

Operating voltage range

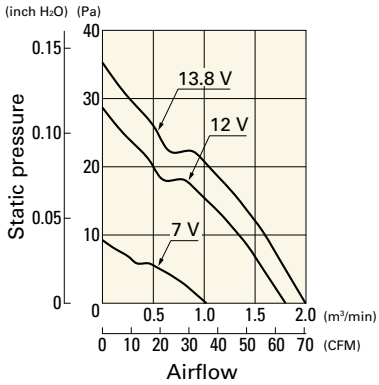

9RA1224G4001 With pulse sensor

Operating voltage range

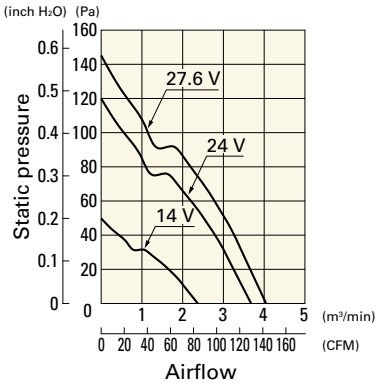

9RA1224E4001 With pulse sensor

Operating voltage range

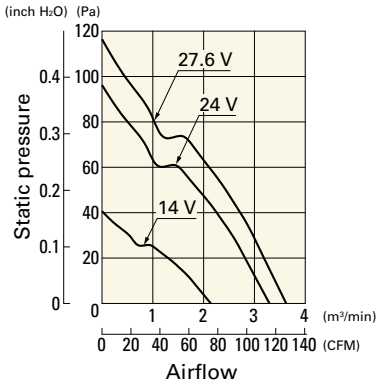

9RA1224A4001 With pulse sensor

Operating voltage range

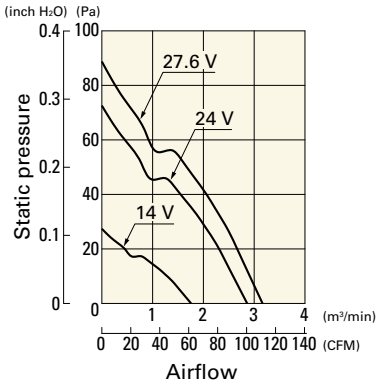

9RA1224H4001 With pulse sensor

Operating voltage range

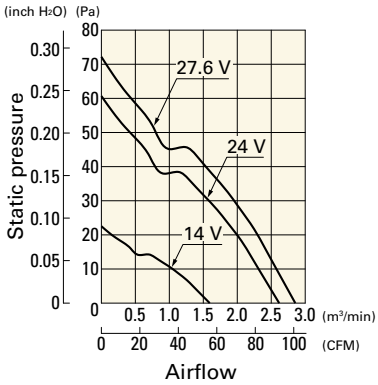

9RA1224M4001 With pulse sensor

Operating voltage range

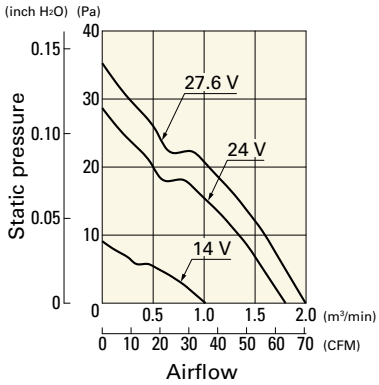

9RA1248G4001 With pulse sensor

Operating voltage range

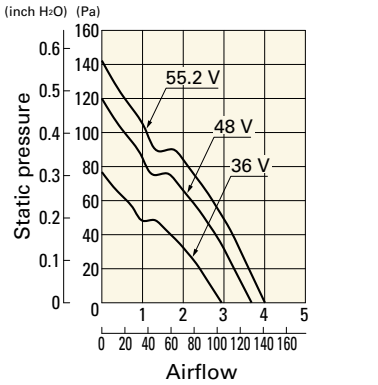

Airflow - Static Pressure Characteristics

9RA1248E4001 With pulse sensor

Operating voltage range

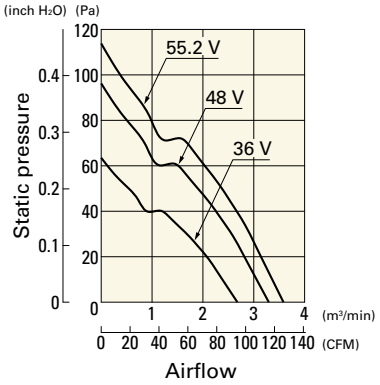

9RA1248A4001 With pulse sensor

Operating voltage range

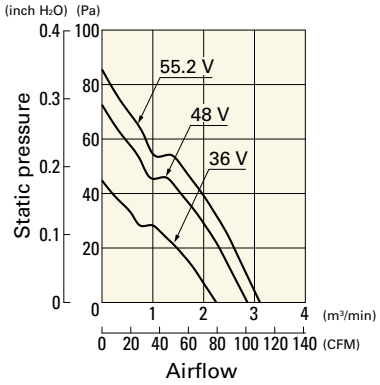

Dimensions (unit: mm) (Ribbed frame with pulse sensor with PWM control)

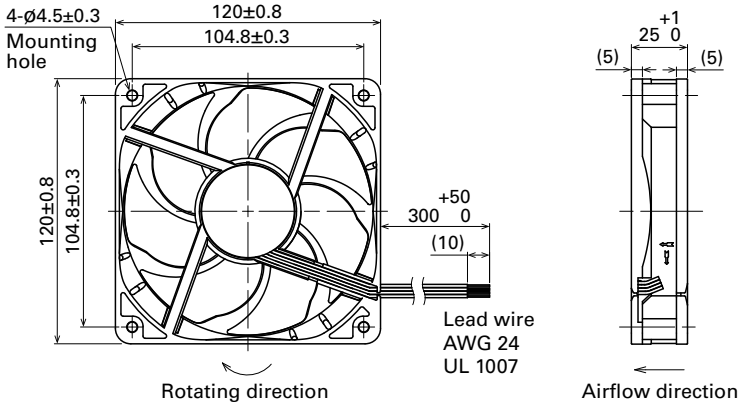

Reference Dimensions of Mounting Holes and Vent Opening (unit: mm)

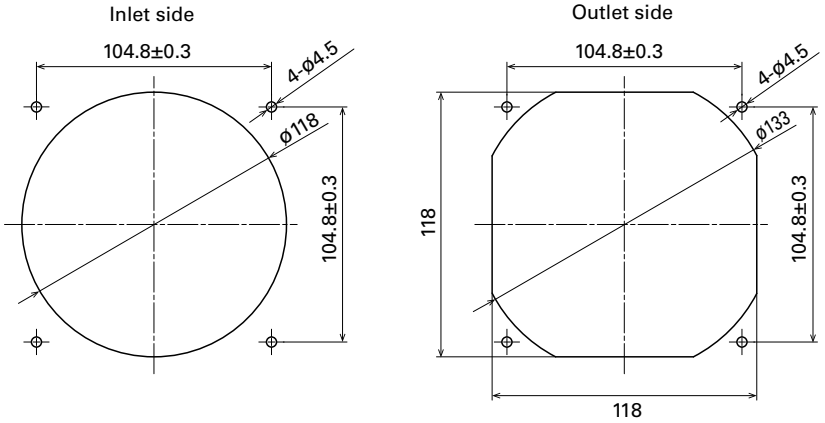

Options

Finger guards page: p. 591

Model no.: 109-019E, 109-019K

Resin finger guards page: p. 597

Model no.: 109-1000G

Resin filter kits page: p. 598

Model no.: 109-1000F13 (13PPI), 109-1000F20 (20PPI),
109-1000F30 (30PPI), 109-1000F40 (40PPI)

120×120×25 mm

San Ace 120 9S type Silent Fan

General Specifications

- Material ..... Frame: Plastic (Flammability: UL 94V-0), Impeller: Plastic (Flammability: UL 94V-1)
- Expected life ..... See the table below. (L10 life: 90% survival rate for continuous operation in free air at 60˚C, rated voltage) Expected life at 40°C is for reference only.
- Motor protection function ..... Locked rotor burnout protection, Reverse polarity protection For details, please refer to p. 608.
- Dielectric strength ..... 50/60 Hz, 500 VAC, for 1 minute (between lead wire conductors and frame)
- Insulation resistance ..... 10 MΩ min. at 500 VDC (between lead wire conductors and frame)
- Sound pressure level (SPL) ..... A-weighted sound pressure level (SPL) at 1 m away from the air inlet.
- Storage temperature ..... -30 to +70˚C (Non-condensing)
- Lead wire ..... ⊕Red ⊖Black Sensor Yellow
- Mass ..... 140 g

Specifications

The models listed below **have ribs and a pulse sensor.** For models without ribs, append "1" to the end of model numbers.

Model no.	Rated voltage [V]	Operating voltage range [V]	Rated current [A]	Rated input [W]	Rated speed [min⁻¹]	Max. airflow [m³/min]	Max. airflow [CFM]	Max. static pressure [Pa]	Max. static pressure [inchH₂O]	SPL [dB (A)]	Operating temperature [˚C]	Expected life [h]
9S1212H401	12	8 to 13.2	0.39	4.68	2700	2.45	86.5	45.2	0.18	36	-10 to +60	40000/60˚C (70000/40˚C)
9S1212F401		8 to 13.8	0.19	2.28	2200	2.0	70.6	30.0	0.12	30	-10 to +70	
9S1212M401			0.13	1.56	1850	1.66	58.6	22.7	0.09	24		
9S1212L401			0.08	0.96	1500	1.36	48.1	14.9	0.06	17		
9S1224M401	24	14 to 26.4	0.06	1.44	1850	1.66	58.6	22.7	0.09	24		

Note 1: Sensor and control options are available for selection. Refer to the table on p. 649.
Note 2: The » mark indicates Short Lead Time Service applicable models. See p. 664 for details.

Airflow - Static Pressure Characteristics

9S1212H401 With pulse sensor

Operating voltage range

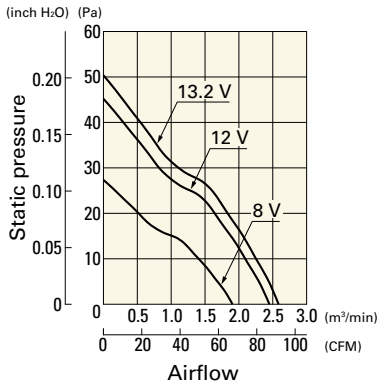

9S1212F401 With pulse sensor

Operating voltage range

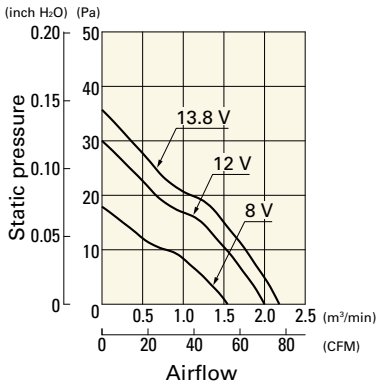

9S1212M401 With pulse sensor

Operating voltage range

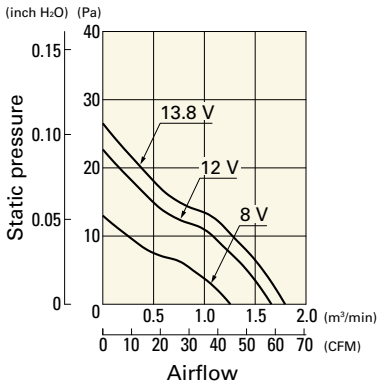

Airflow - Static Pressure Characteristics

9S1212L401 With pulse sensor

Operating voltage range

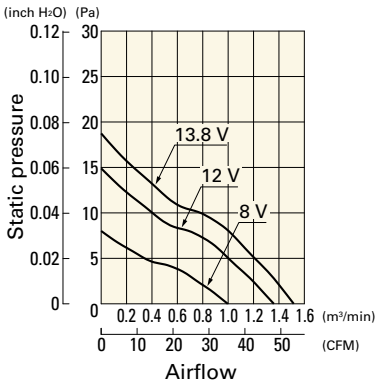

9S1224M401 With pulse sensor

Operating voltage range

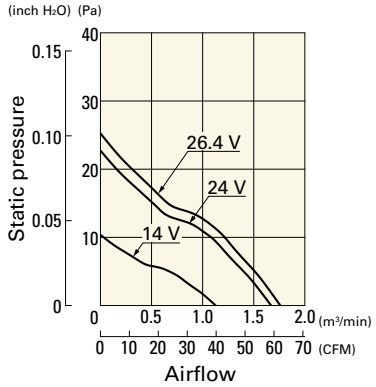

Dimensions (unit: mm) (With ribs)

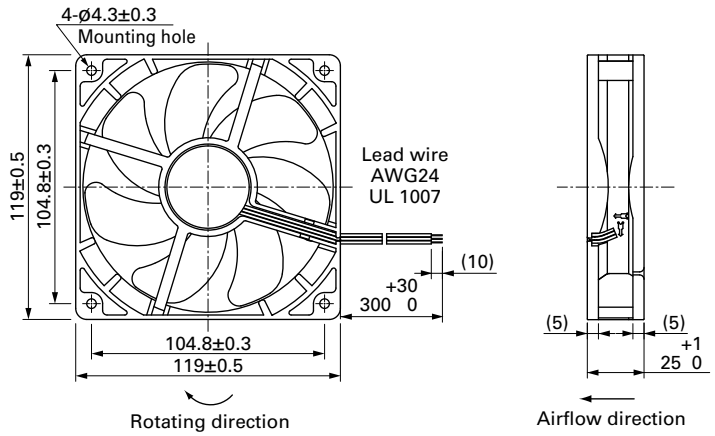

Reference Dimensions of Mounting Holes and Vent Opening (unit: mm)

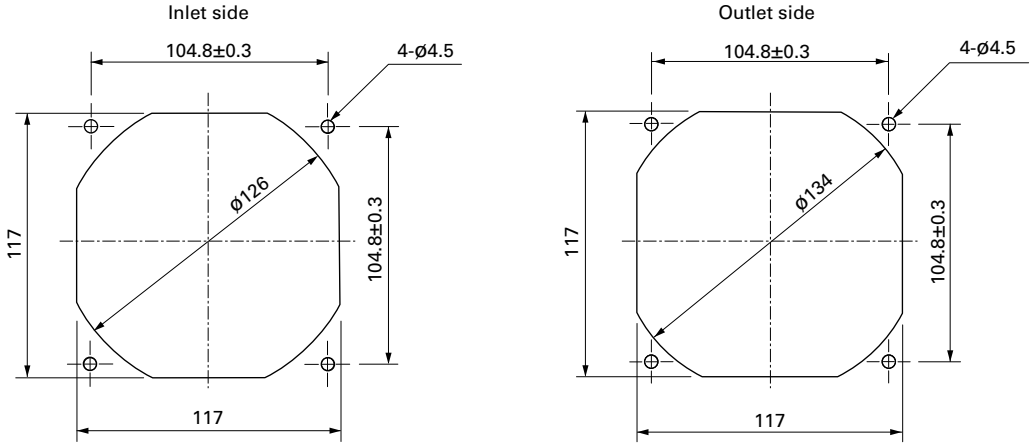

Options

Finger guards page: p. 591

Model no.: 109-019E, 109-019K

Resin finger guards page: p. 597

Model no.: 109-1000G

Resin filter kits page: p. 598

Model no.: 109-1000F13 (13PPI), 109-1000F20 (20PPI),
109-1000F30 (30PPI), 109-1000F40 (40PPI)

120×120×38 mm

San Ace 120 9HV type

General Specifications

- Material ..... Frame: Aluminum, Impeller: Plastic (Flammability: UL 94V-1)
- Expected life ..... See the table below. (L10 life: 90% survival rate for continuous operation in free air at 60˚C, rated voltage) Expected life at 40°C is for reference only.
- Motor protection function ..... Locked rotor burnout protection, Reverse polarity protection For details, please refer to p. 608.
- Dielectric strength ..... 50/60 Hz, 500 VAC, for 1 minute (between lead wire conductors and frame)
- Insulation resistance ..... 10 MΩ min. at 500 VDC (between lead wire conductors and frame)
- Sound pressure level (SPL) ..... A-weighted sound pressure level (SPL) at 1 m away from the air inlet.
- Storage temperature ..... -30 to +70˚C (Non-condensing)
- Lead wire ..... ⊕Red ⊖Black Sensor Yellow Control Brown
- Mass ..... 460 g

Specifications

The models listed below **have a pulse sensor with PWM control.**

Model no.	Rated voltage [V]	Operating voltage range [V]	PWM duty cycle* [%]	Rated current [A]	Rated input [W]	Rated speed [min⁻¹]	Max. airflow [m³/min]	Max. airflow [CFM]	Max. static pressure [Pa]	Max. static pressure [inchH₂O]	SPL [dB (A)]	Operating temperature [˚C]	Expected life [h]
9HV1224P1A001	24	21.6 to 26.4	100	2.4	57.6	9600	7.0	247	950	3.82	71	-20 to +70	40000/60˚C (70000/40˚C)
			0	0.37	8.88	3800	2.7	95	161	0.65	46		
9HV1248P1G001	48	36 to 60	100	2.0	96	11500	8.3	293	1300	5.22	75		
			0	0.23	11	3800	2.7	95	161	0.65	46		
9HV1248P1H001			100	1.4	67	10000	7.2	254	1050	4.22	72		
			0	0.23	11	3800	2.7	95	161	0.65	46		

PWM frequency is 25 kHz. Models without ratings for 0% PWM duty cycle have zero speed at 0%. When control terminal is open, speed is the same as at 100% duty cycle.

Note 1: Sensor and control options are available for selection. Refer to the table on p. 642.
Note 2: The » mark indicates Short LeadTime Service applicable models. See p. 664 for details.

Airflow - Static Pressure Characteristics / PWM Duty - Speed Characteristics Example

9HV1224P1A001 With pulse sensor with PWM control

PWM duty cycle

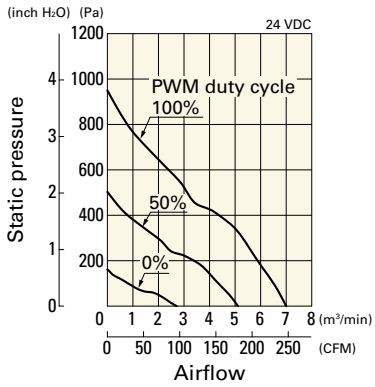

Operating voltage range

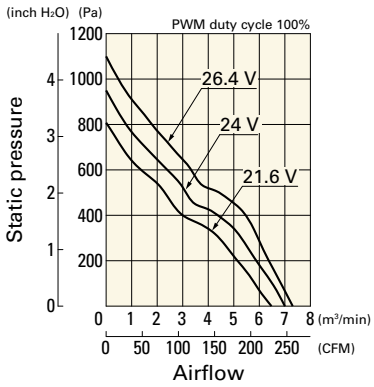

PWM duty - Speed characteristics example

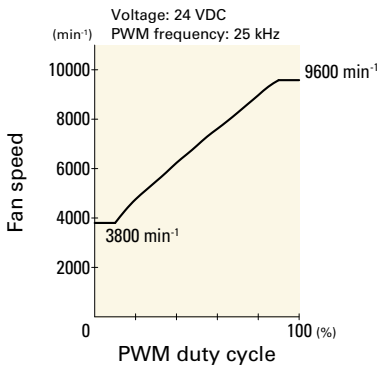

Airflow - Static Pressure Characteristics / PWM Duty - Speed Characteristics Example

9HV1248P1G001 With pulse sensor with PWM control

PWM duty cycle

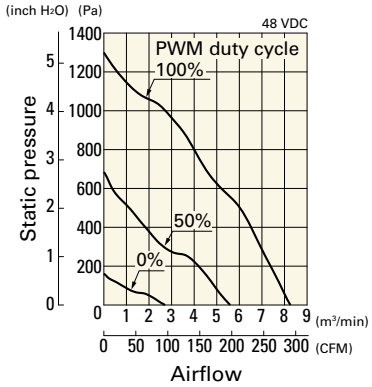

Operating voltage range

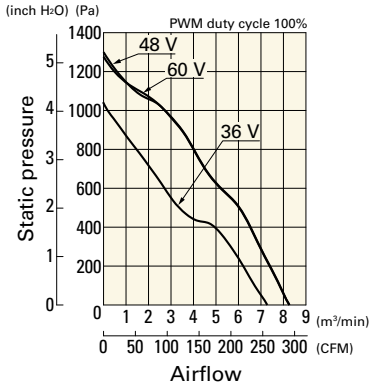

PWM duty - Speed characteristics example

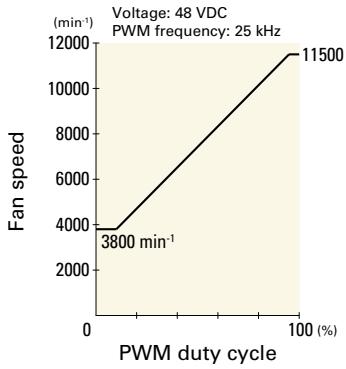

9HV1248P1H001 With pulse sensor with PWM control

PWM duty cycle

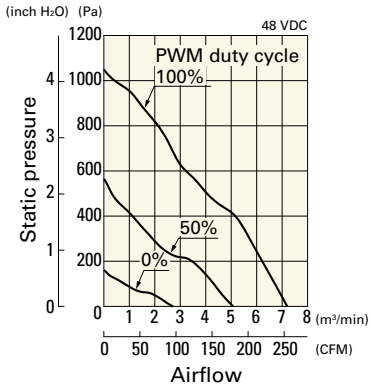

Operating voltage range

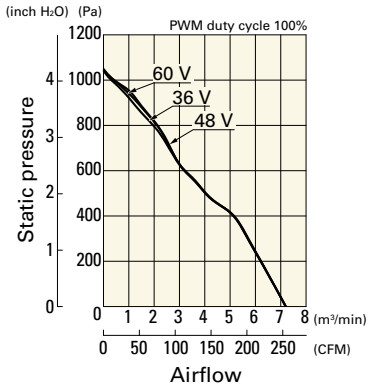

PWM duty - Speed characteristics example

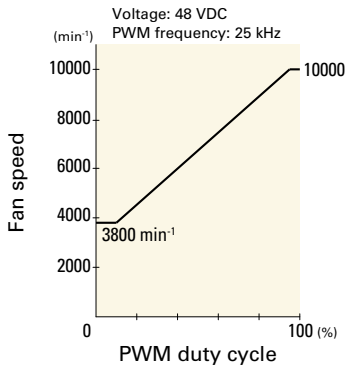

Dimensions (unit: mm)

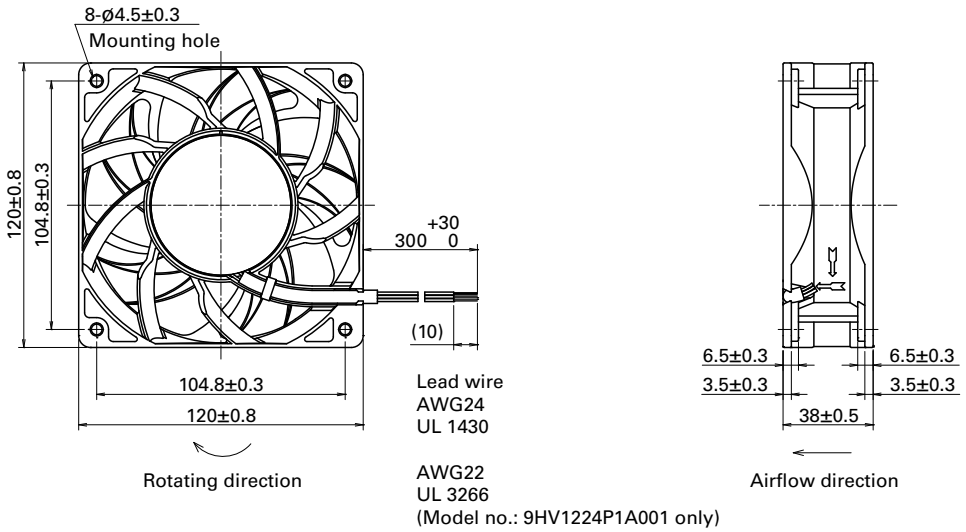

Reference Dimensions of Mounting Holes and Vent Opening (unit: mm)

Inlet side, Outlet side

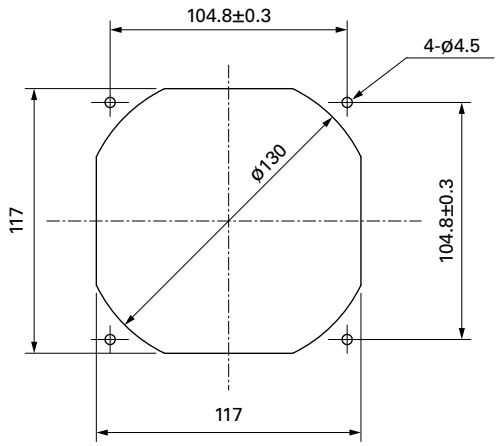

Options

Finger guards page: p. 591

Model no.: 109-019E, 109-019K

Resin filter kits page: p. 598

Model no.: 109-1000F13 (13PPI), 109-1000F20 (20PPI),
109-1000F30 (30PPI), 109-1000F40 (40PPI)

Resin finger guards page: p. 597

Model no.: 109-1000G

DC Fan

120×120×38 mm

San Ace 120 9SX type

General Specifications

- Material ..... Frame: Aluminum, Impeller: Plastic (Flammability: UL 94V-1)
- Expected life ..... See the table below. (L10 life: 90% survival rate for continuous operation in free air at 60˚C, rated voltage) Expected life at 40°C is for reference only.
- Motor protection function ..... Locked rotor burnout protection, Reverse polarity protection For details, please refer to p. 608.
- Dielectric strength ..... 50/60 Hz, 500 VAC, for 1 minute (between lead wire conductors and frame)
- Insulation resistance ..... 10 MΩ min. at 500 VDC (between lead wire conductors and frame)
- Sound pressure level (SPL) ..... A-weighted sound pressure level (SPL) at 1 m away from the air inlet.
- Storage temperature ..... -30 to +70˚C (Non-condensing)
- Lead wire ..... ⊕Red ⊖Black Sensor Yellow Control Brown
- Mass ..... 390 g

Specifications

The models listed below **have ribs and a pulse sensor with PWM control.**

Model no.	Rated voltage [V]	Operating voltage range [V]	PWM duty cycle* [%]	Rated current [A]	Rated input [W]	Rated speed [min⁻¹]	Max. airflow [m³/min]	Max. airflow [CFM]	Max. static pressure [Pa]	Max. static pressure [inchH₂O]	SPL [dB (A)]	Operating temperature [˚C]	Expected life [h]
9SX1212P1K001	12	10.8 to 13.2	100	4.4	52.8	7400	7.3	258	480	1.93	66	-10 to +60	40000/60˚C (70000/40˚C)

PWM frequency is 25 kHz. Models without ratings for 0% PWM duty cycle have zero speed at 0%. When control terminal is open, speed is the same as at 100% duty cycle.

Note: The » mark indicates Short Lead Time Service applicable models. See p. 664 for details.

Airflow - Static Pressure Characteristics / PWM Duty - Speed Characteristics Example

9SX1212P1K001 With pulse sensor with PWM control

PWM duty cycle

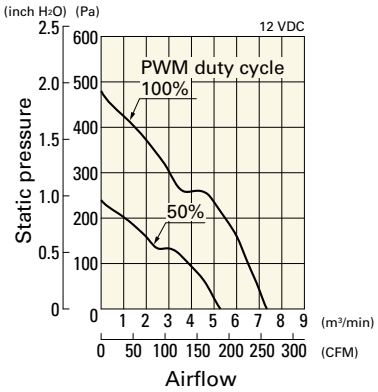

Operating voltage range

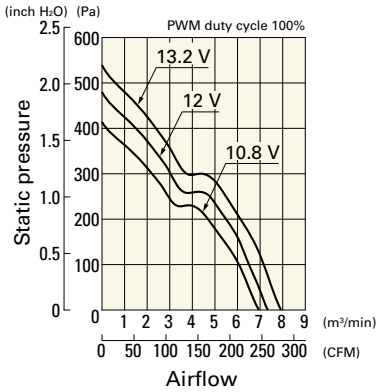

PWM duty - Speed characteristics example

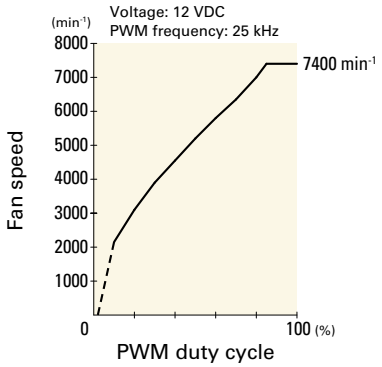

Dimensions (unit: mm)

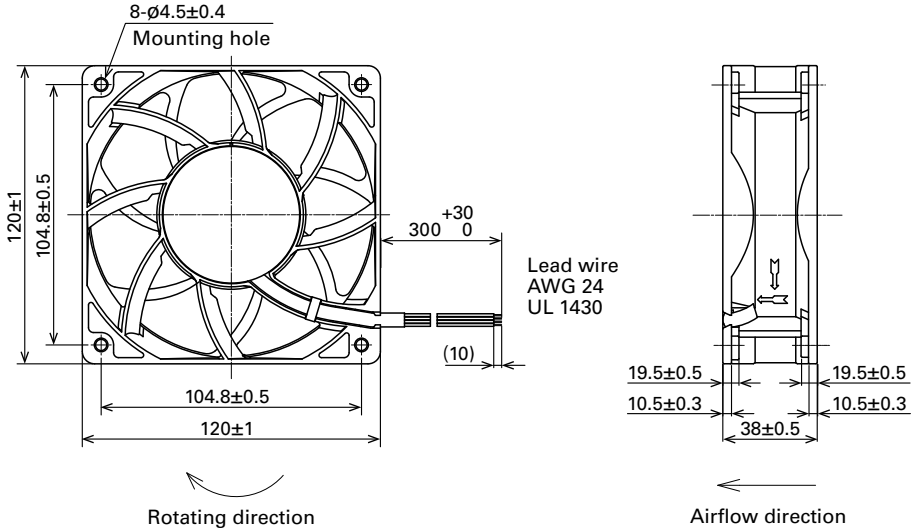

Reference Dimensions of Mounting Holes and Vent Opening (unit: mm)

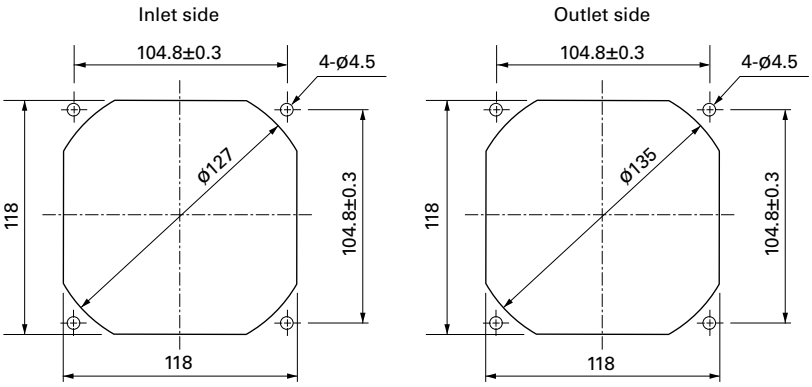

Options

Finger guards page: p. 591

Model no.: 109-019E, 109-019K

Resin filter kits page: p. 598

Model no.: 109-1000F13 (13PPI), 109-1000F20 (20PPI),
109-1000F30 (30PPI), 109-1000F40 (40PPI)

Resin finger guards page: p. 597

Model no.: 109-1000G

DC Fan

120×120×38 mm

San Ace 120 9GV type

General Specifications

- Material ..... Frame: Plastic (Flammability: UL 94V-0), Impeller: Plastic (Flammability: UL 94V-1)
- Expected life ..... See the table below. (L10 life: 90% survival rate for continuous operation in free air at 60˚C, rated voltage) Expected life at 40°C is for reference only.
- Motor protection function ..... Locked rotor burnout protection, Reverse polarity protection For details, please refer to p. 608.
- Dielectric strength ..... 50/60 Hz, 500 VAC, for 1 minute (between lead wire conductors and frame)
- Insulation resistance ..... 10 MΩ min. at 500 VDC (between lead wire conductors and frame)
- Sound pressure level (SPL) ..... A-weighted sound pressure level (SPL) at 1 m away from the air inlet.
- Storage temperature ..... -30 to +70˚C (Non-condensing)
- Lead wire ..... ⊕Red ⊖Black Sensor Yellow Control Brown
- Mass ..... 360 g

Specifications

The models listed below **have ribs and a pulse sensor with PWM control.** For models without ribs, append "1" to the end of model numbers.

Model no.	Rated voltage [V]	Operating voltage range [V]	PWM duty cycle* [%]	Rated current [A]	Rated input [W]	Rated speed [min⁻¹]	Max. airflow [m³/min]	Max. airflow [CFM]	Max. static pressure [Pa]	Max. static pressure [inchH₂O]	SPL [dB (A)]	Operating temperature [˚C]	Expected life [h]
9GV1212P1J01	12	10.2 to 13.8	100	3.0	36.0	6400	6.35	224	360	1.45	64	-20 to +70	40000/60˚C (70000/40˚C)
			0	0.19	2.28	1500	1.49	52.6	19.8	0.08	33		
9GV1212P1G01			100	2.1	25.2	5500	5.45	192.6	265	1.06	60		
			0	0.19	2.28	1500	1.49	52.6	19.8	0.08	33		
9GV1224P1J01	24	20.4 to 27.6	100	1.5	36.0	6400	6.35	224	360	1.45	64		
9GV1224P1H01			100	0.8	19.2	5200	5.16	182.3	237	0.95	58		
9GV1248P1J01	48	40.8 to 55.2	100	0.75	36.0	6400	6.35	224	360	1.45	64		
			0	0.06	2.88	1500	1.49	52.6	26.1	0.106	33		

PWM frequency is 25 kHz. Models without ratings for 0% PWM duty cycle have zero speed at 0%. When control terminal is open, speed is the same as at 100% duty cycle.

Note 1: Sensor and control options are available for selection. Refer to the table on p. 641.
Note 2: The » mark indicates Short LeadTime Service applicable models. See p. 664 for details.

Airflow - Static Pressure Characteristics / PWM Duty - Speed Characteristics Example

9GV1212P1J01 With pulse sensor with PWM control

PWM duty cycle

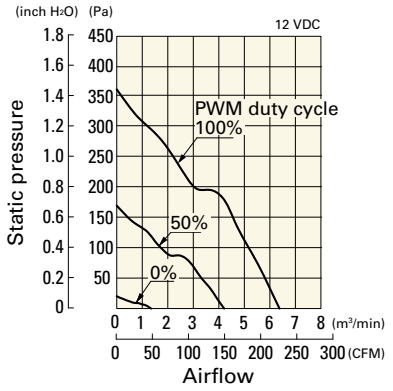

Operating voltage range

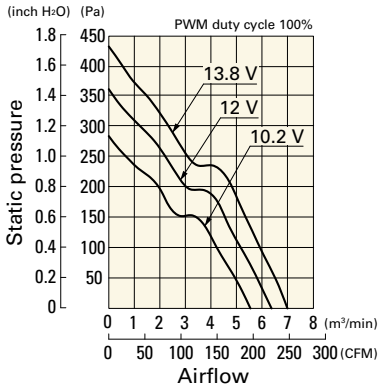

PWM duty - Speed characteristics example

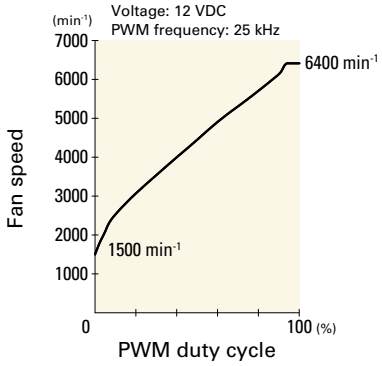

Airflow - Static Pressure Characteristics / PWM Duty - Speed Characteristics Example

9GV1212P1G01 With pulse sensor with PWM control

PWM duty cycle

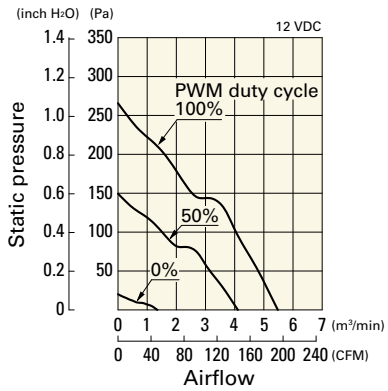

Operating voltage range

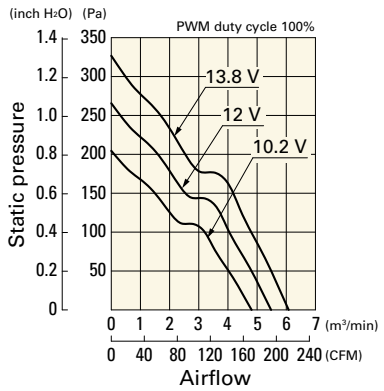

PWM duty - Speed characteristics example

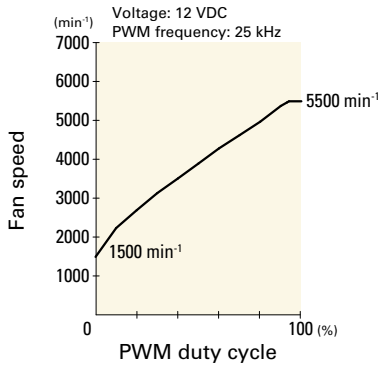

9GV1224P1J01 With pulse sensor with PWM control

PWM duty cycle

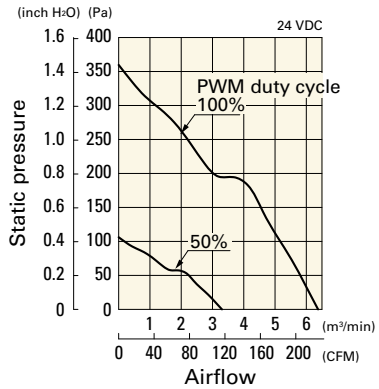

Operating voltage range

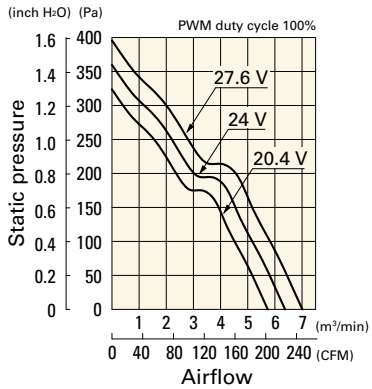

PWM duty - Speed characteristics example

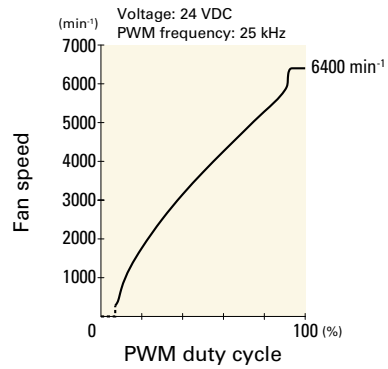

9GV1224P1H01 With pulse sensor with PWM control

PWM duty cycle

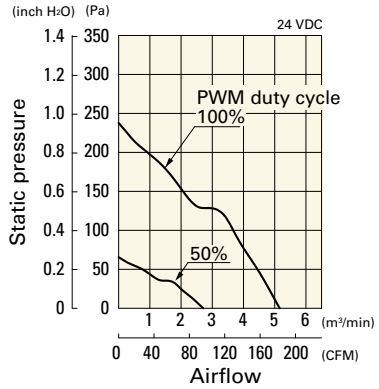

Operating voltage range

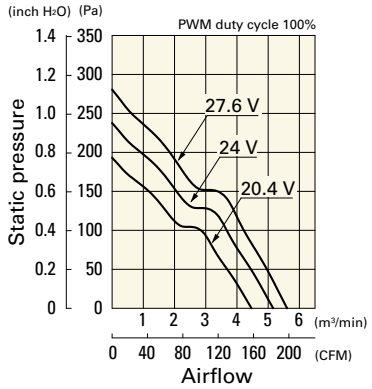

PWM duty - Speed characteristics example

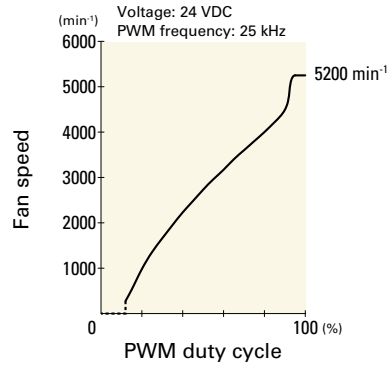

9GV1248P1J01 With pulse sensor with PWM control

PWM duty cycle

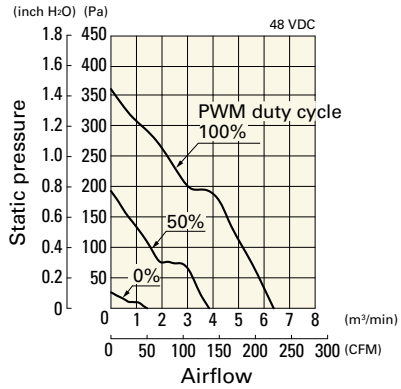

Operating voltage range

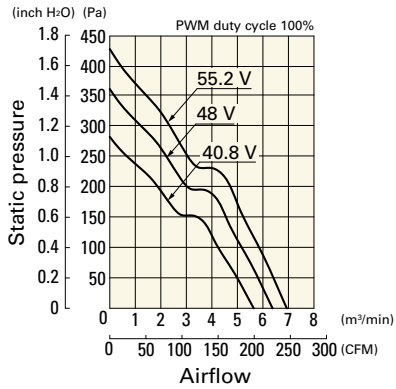

PWM duty - Speed characteristics example

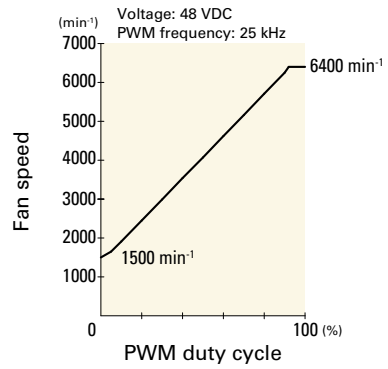

Dimensions (unit: mm) (With ribs)

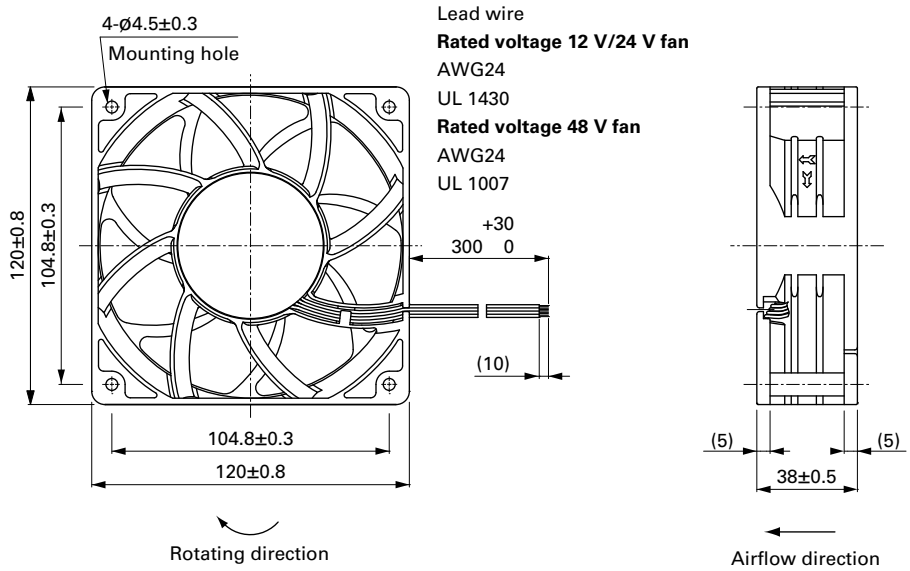

Reference Dimensions of Mounting Holes and Vent Opening (unit: mm)

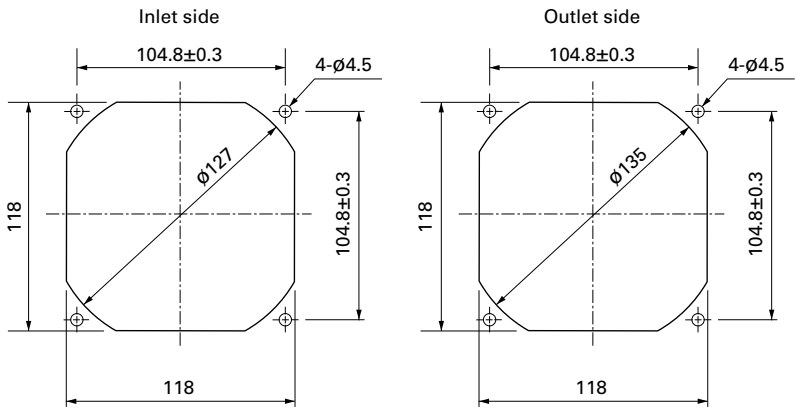

Options

Finger guards page: p. 591

Model no.: 109-019E, 109-019K

Resin finger guards page: p. 597

Model no.: 109-1000G

Resin filter kits page: p. 598

Model no.: 109-1000F13 (13PPI), 109-1000F20 (20PPI),
109-1000F30 (30PPI), 109-1000F40 (40PPI)

120×120×38 mm

San Ace 120 9RA type

General Specifications

- Material ..... Frame: Plastic (Flammability: UL 94V-0), Impeller: Plastic (Flammability: UL 94V-0)
- Expected life ..... See the table below. (L10 life: 90% survival rate for continuous operation in free air at 60˚C, rated voltage) Expected life at 40°C is for reference only.
- Motor protection function ..... Locked rotor burnout protection, Reverse polarity protection For details, please refer to p. 608.
- Dielectric strength ..... 50/60 Hz, 500 VAC, for 1 minute (between lead wire conductors and frame)
- Insulation resistance ..... 10 MΩ min. at 500 VDC (between lead wire conductors and frame)
- Sound pressure level (SPL) ..... A-weighted sound pressure level (SPL) at 1 m away from the air inlet.
- Storage temperature ..... -30 to +70˚C (Non-condensing)
- Lead wire ..... ⊕Red ⊖Black Sensor Yellow Control Brown (For models without PWM control, there is no speed control wiring.)
- Mass ..... 320 g

Specifications

The models listed below **have ribs and a pulse sensor with PWM control.** For models without ribs, append "1" to the end of model numbers.

Model no.	Rated voltage [V]	Operating voltage range [V]	PWM duty cycle* [%]	Rated current [A]	Rated input [W]	Rated speed [min⁻¹]	Max. airflow [m³/min]	Max. airflow [CFM]	Max. static pressure [Pa]	Max. static pressure [inchH₂O]	SPL [dB (A)]	Operating temperature [˚C]	Expected life [h]
9RA1212P1K001	12	10.8 to 13.2	100	0.96	11.5	4700	4.5	158	170	0.683	50	-20 to +70	30000/60˚C (53000/40˚C)
			25	0.12	1.4	1800	1.7	60	24	0.096	25		
9RA1224P1K001	24	21.6 to 26.4	100	0.48	11.5	4700	4.5	158	170	0.683	50		
			25	0.06	1.4	1800	1.7	60	24	0.096	25		
9RA1248P1K001	48	43.2 to 52.8	100	0.25	12.0	4700	4.5	158	170	0.683	50		
			25	0.04	1.9	1500	1.4	50	17	0.069	21		

PWM frequency is 25 kHz. Models without ratings for 0% PWM duty cycle have zero speed at 0%. When control terminal is open, speed is the same as at 100% duty cycle.

The models listed below **have ribs and a pulse sensor.** For models without ribs, append "1" to the end of model numbers.

Model no.	Rated voltage [V]	Operating voltage range [V]	Rated current [A]	Rated input [W]	Rated speed [min⁻¹]	Max. airflow [m³/min]	Max. airflow [CFM]	Max. static pressure [Pa]	Max. static pressure [inchH₂O]	SPL [dB (A)]	Operating temperature [˚C]	Expected life [h]
9RA1212G1001	12	7 to 13.8	0.70	8.4	4200	4.0	141	135	0.542	46	-20 to +70	40000/60˚C (70000/40˚C)
9RA1212E1001			0.47	5.6	3600	3.4	120	100	0.402	43		
9RA1212H1001			0.25	3.0	3000	2.8	99	70	0.281	37		
9RA1224G1001	24	14 to 27.6	0.35	8.4	4200	4.0	141	135	0.542	46		
9RA1224E1001			0.24	5.8	3600	3.4	120	100	0.402	43		
9RA1224H1001			0.13	3.1	3000	2.8	99	70	0.281	37		
9RA1248G1001	48	40.8 to 55.2	0.18	8.6	4200	4.0	141	135	0.542	46		
9RA1248E1001			0.12	5.8	3600	3.4	120	100	0.402	43		
9RA1248H1001			0.07	3.4	3000	2.8	99	70	0.281	37		

Note 1: Sensor and control options are available for selection. Refer to the table on pp. 647 to 648.
Note 2: The » mark indicates Short LeadTime Service applicable models. See p. 664 for details.

Airflow - Static Pressure Characteristics / PWM Duty - Speed Characteristics Example

9RA1212P1K001 With pulse sensor with PWM control

PWM duty cycle

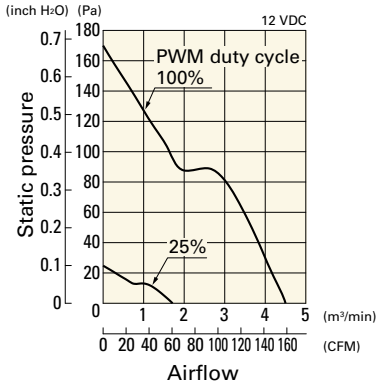

Operating voltage range

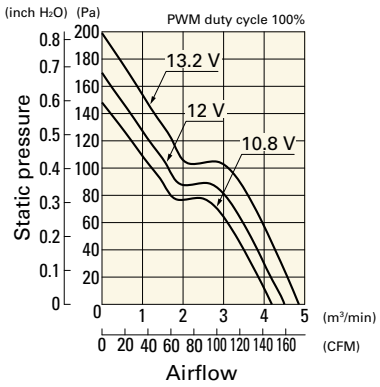

PWM duty - Speed characteristics example

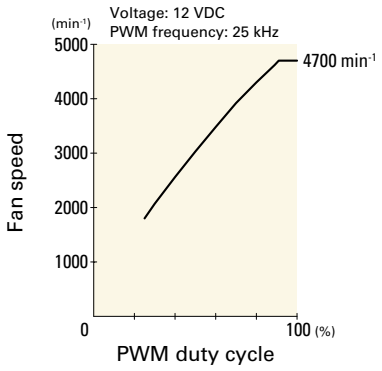

9RA1224P1K001 With pulse sensor with PWM control

PWM duty cycle

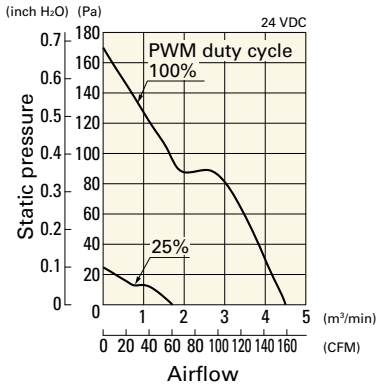

Operating voltage range

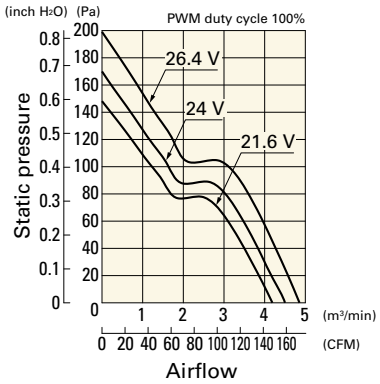

PWM duty - Speed characteristics example

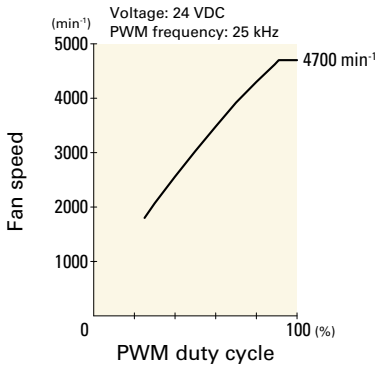

9RA1248P1K001 With pulse sensor with PWM control

PWM duty cycle

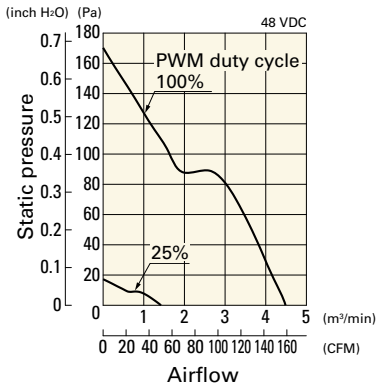

Operating voltage range

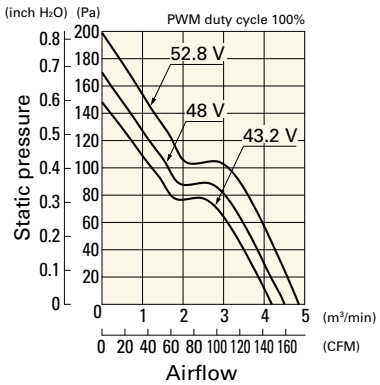

PWM duty - Speed characteristics example

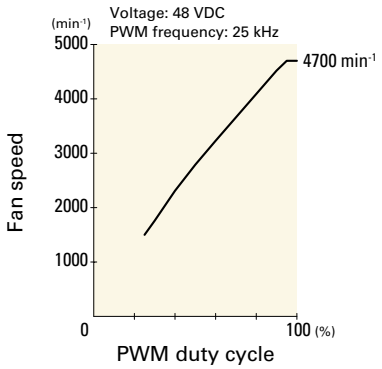

Airflow - Static Pressure Characteristics

9RA1212G1001 With pulse sensor

Operating voltage range

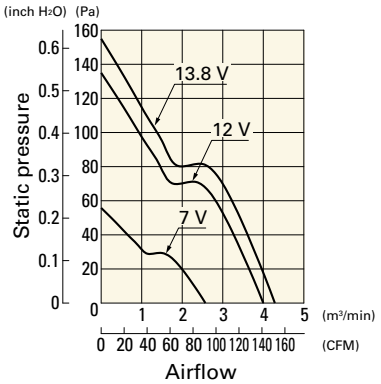

9RA1212E1001 With pulse sensor

Operating voltage range

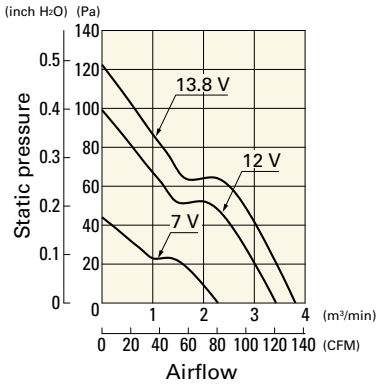

9RA1212H1001 With pulse sensor

Operating voltage range

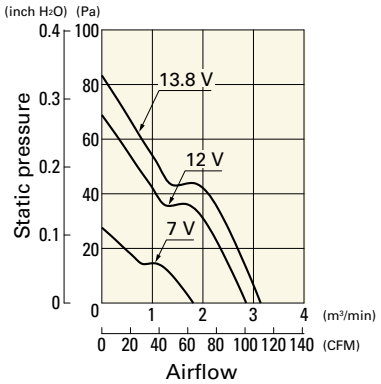

9RA1224G1001 With pulse sensor

Operating voltage range

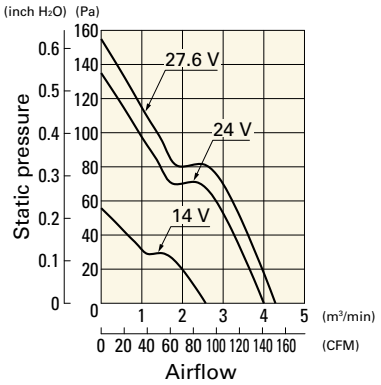

9RA1224E1001 With pulse sensor

Operating voltage range

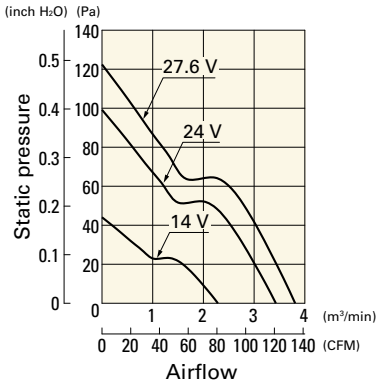

9RA1224H1001 With pulse sensor

Operating voltage range

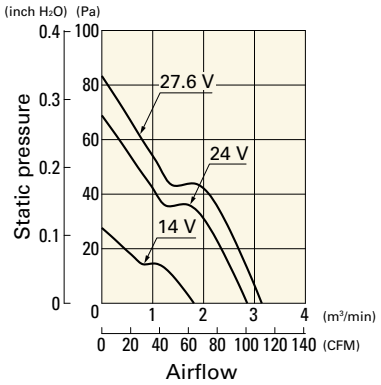

9RA1248G1001 With pulse sensor

Operating voltage range

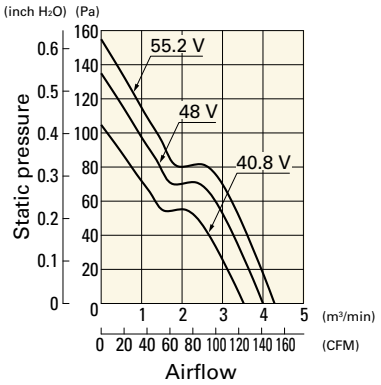

9RA1248E1001 With pulse sensor

Operating voltage range

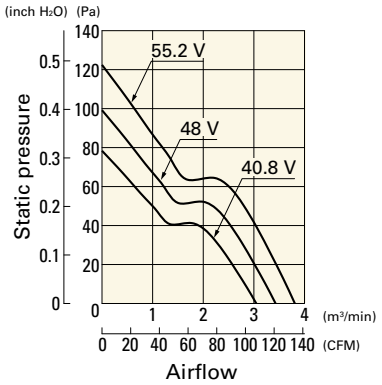

9RA1248H1001 With pulse sensor

Operating voltage range

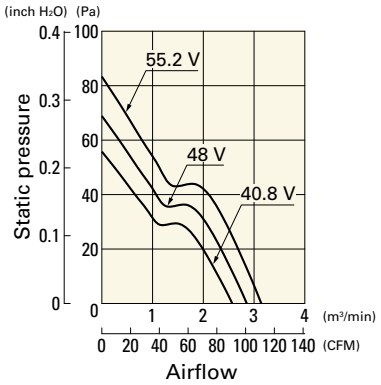

Dimensions (unit: mm) (Ribbed frame with pulse sensor with PWM control)

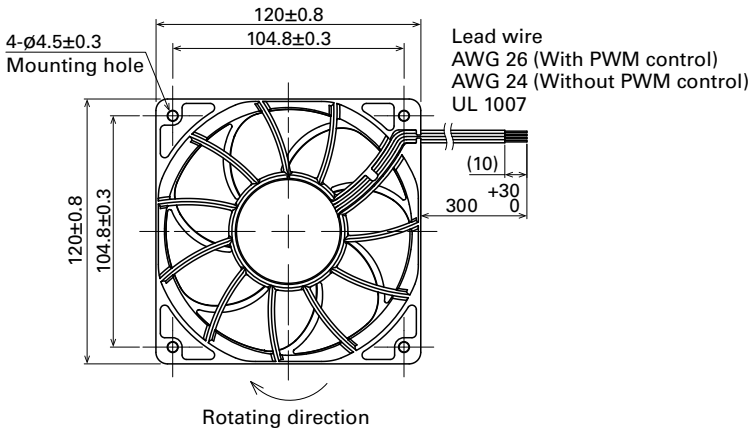

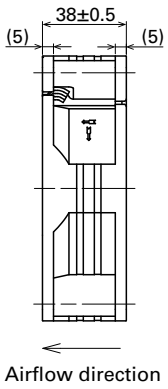

Reference Dimensions of Mounting Holes and Vent Opening (unit: mm)

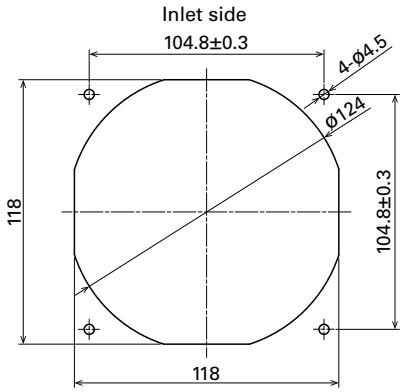

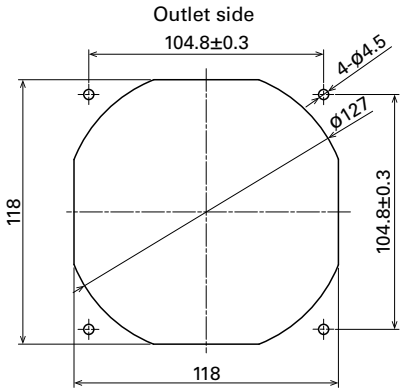

Options

Finger guards page: p. 591

Model no.: 109-019E, 109-019K

Resin finger guards page: p. 597

Model no.: 109-1000G

Resin filter kits page: p. 598

Model no.: 109-1000F13 (13PPI), 109-1000F20 (20PPI),
109-1000F30 (30PPI), 109-1000F40 (40PPI)

140×140×38 mm

San Ace 140 9GV type

General Specifications

- Material ..... Frame: Aluminum, Impeller: Plastic (Flammability: UL 94V-1)
- Expected life ..... See the table below. (L10 life: 90% survival rate for continuous operation in free air at 60˚C, rated voltage) Expected life at 40°C is for reference only.
- Motor protection function ..... Locked rotor burnout protection, Reverse polarity protection For details, please refer to p. 608.
- Dielectric strength ..... 50/60 Hz, 500 VAC, for 1 minute (between lead wire conductors and frame)
- Insulation resistance ..... 10 MΩ min. at 500 VDC (between lead wire conductors and frame)
- Sound pressure level (SPL) ..... A-weighted sound pressure level (SPL) at 1 m away from the air inlet.
- Storage temperature ..... -30 to +70˚C (Non-condensing)
- Lead wire ..... ⊕Red ⊖Black Sensor Yellow Control Brown
- Mass ..... 630 g

Specifications

The models listed below **have a pulse sensor with PWM control.**

Model no.	Rated voltage [V]	Operating voltage range [V]	PWM duty cycle* [%]	Rated current [A]	Rated input [W]	Rated speed [min⁻¹]	Max. airflow [m³/min]	Max. airflow [CFM]	Max. static pressure [Pa]	Max. static pressure [inchH₂O]	SPL [dB (A)]	Operating temperature [˚C]	Expected life [h]
9GV1412P1G001	12	10.8 to 13.2	100	4.6	55.2	7600	8.8	310	640	2.57	70	-20 to +70	40000/60˚C (70000/40˚C)
			20	0.26	3.12	2300	2.66	93	80	0.32	39		
9GV1412P1S001			100	3.1	37.2	6650	7.7	272	480	1.93	67		
			20	0.26	3.12	2300	2.66	93	80	0.32	39		
9GV1412P1H001			100	1.7	20.4	5200	6.0	212	300	1.2	62		
			20	0.26	3.12	2300	2.66	93	80	0.32	39		
9GV1424P1G001	24	21.6 to 26.4	100	2.3	55.2	7600	8.8	310	640	2.57	70		
			20	0.13	3.12	2300	2.66	93	80	0.32	39		
9GV1424P1S001			100	1.55	37.2	6650	7.7	272	480	1.93	67		
			20	0.13	3.12	2300	2.66	93	80	0.32	39		
9GV1424P1H001			100	0.85	20.4	5200	6.0	212	300	1.2	62		
			20	0.13	3.12	2300	2.66	93	80	0.32	39		
9GV1448P1G001	48	36 to 60	100	1.15	55.2	7600	8.8	310	640	2.57	70		
			20	0.11	5.28	2300	2.66	93	80	0.32	39		
9GV1448P1S001			100	0.78	37.44	6650	7.7	272	480	1.93	67		
			20	0.11	5.28	2300	2.66	93	80	0.32	39		
9GV1448P1H001			100	0.42	20.16	5200	6.0	212	300	1.2	62		
			20	0.11	5.28	2300	2.66	93	80	0.32	39		

PWM frequency is 25 kHz. Models without ratings for 0% PWM duty cycle have zero speed at 0%. When control terminal is open, speed is the same as at 100% duty cycle.

Note 1: Sensor and control options are available for selection. Refer to the table on p. 642.
Note 2: The » mark indicates Short LeadTime Service applicable models. See p. 664 for details.

Airflow - Static Pressure Characteristics / PWM Duty - Speed Characteristics Example

9GV1412P1G001 With pulse sensor with PWM control

PWM duty cycle

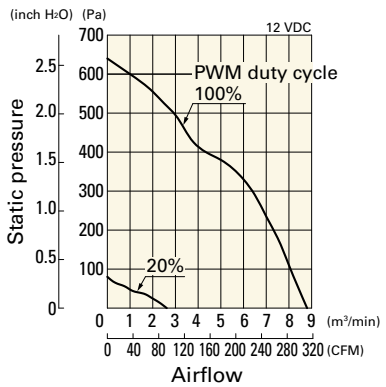

Operating voltage range

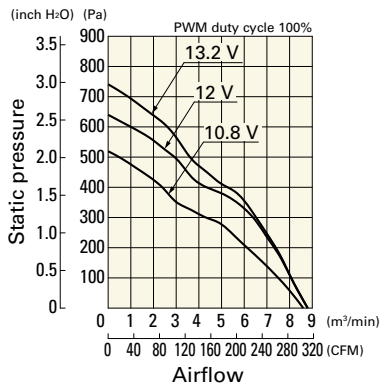

PWM duty - Speed characteristics example

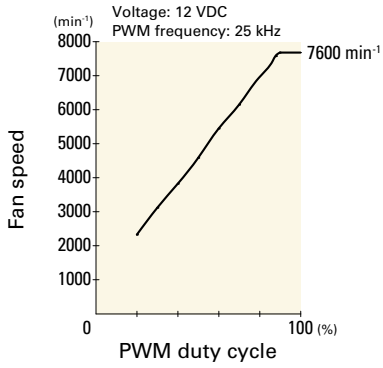

Airflow - Static Pressure Characteristics / PWM Duty - Speed Characteristics Example

9GV1412P1S001 With pulse sensor with PWM control

PWM duty cycle

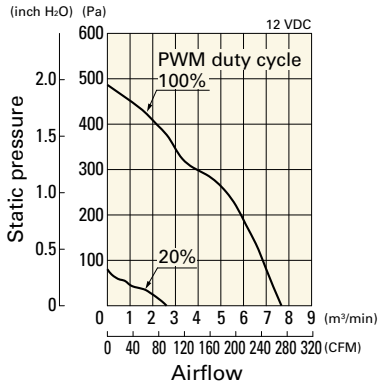

Operating voltage range

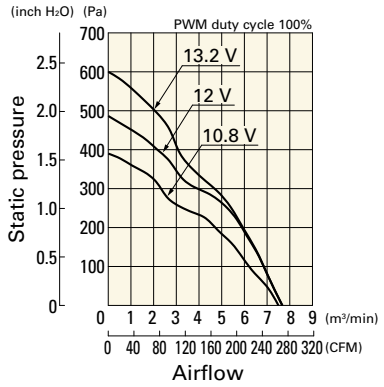

PWM duty - Speed characteristics example

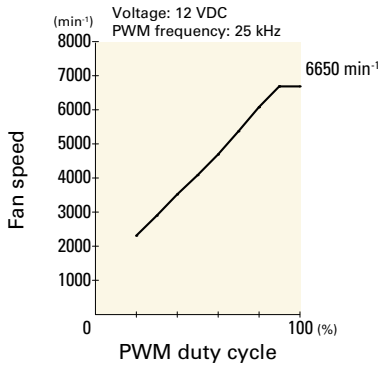

9GV1412P1H001 With pulse sensor with PWM control

PWM duty cycle

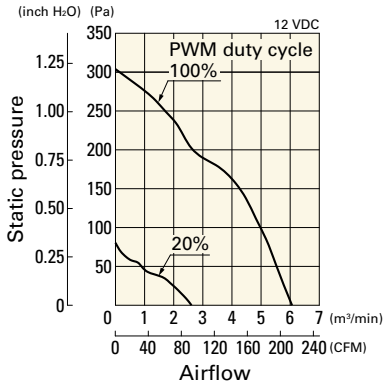

Operating voltage range

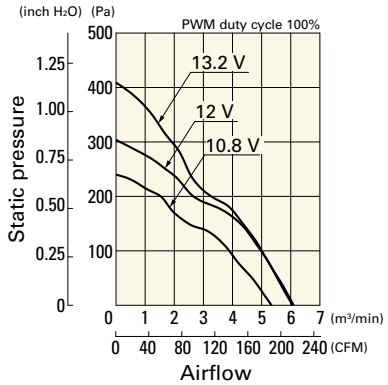

PWM duty - Speed characteristics example

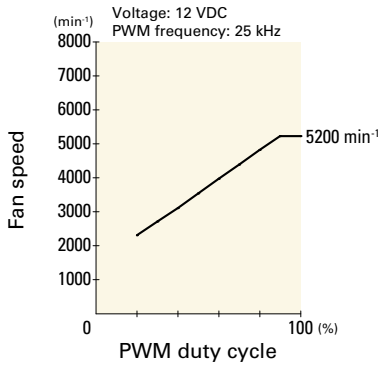

9GV1424P1G001 With pulse sensor with PWM control

PWM duty cycle

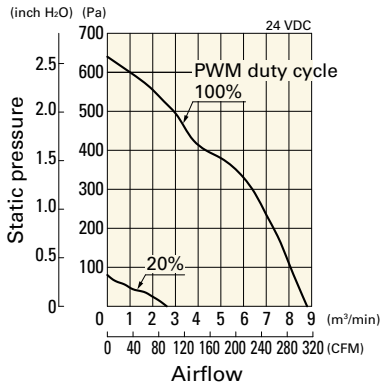

Operating voltage range

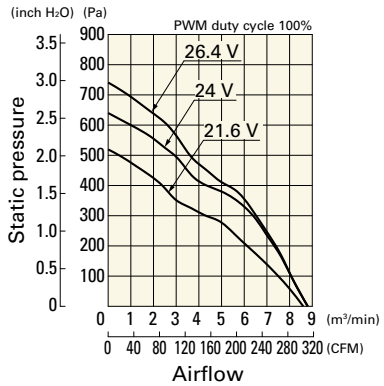

PWM duty - Speed characteristics example

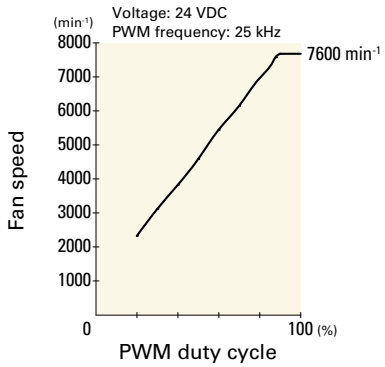

9GV1424P1S001 With pulse sensor with PWM control

PWM duty cycle

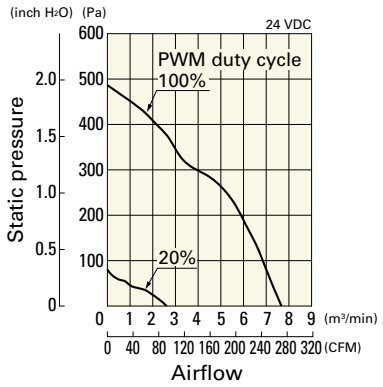

Operating voltage range

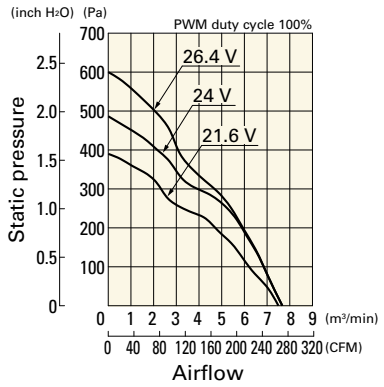

PWM duty - Speed characteristics example

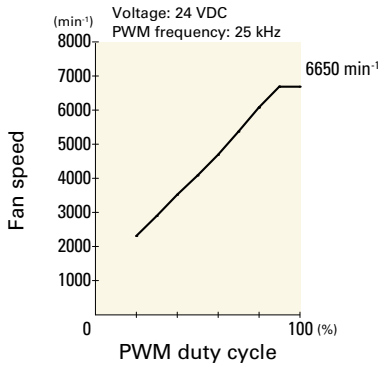

Airflow - Static Pressure Characteristics / PWM Duty - Speed Characteristics Example

9GV1424P1H001 With pulse sensor with PWM control

PWM duty cycle

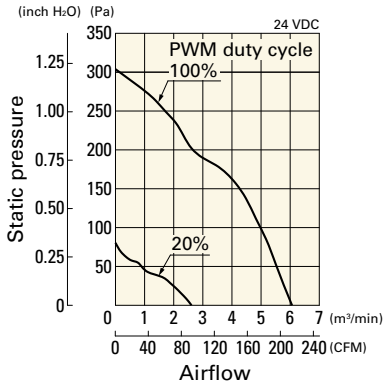

Operating voltage range

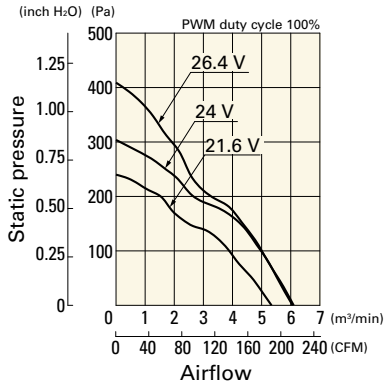

PWM duty - Speed characteristics example

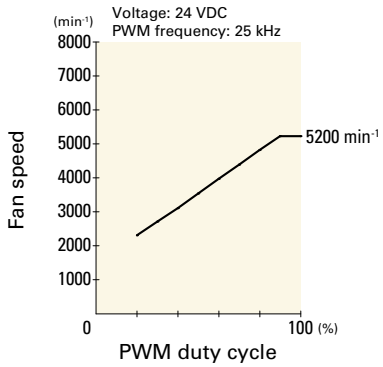

9GV1448P1G001 With pulse sensor with PWM control

PWM duty cycle

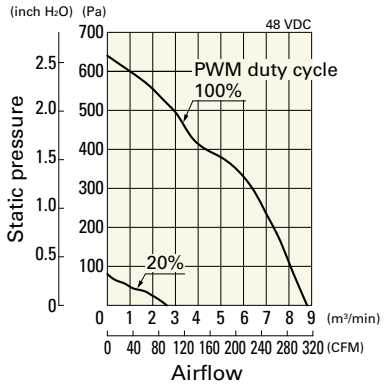

Operating voltage range

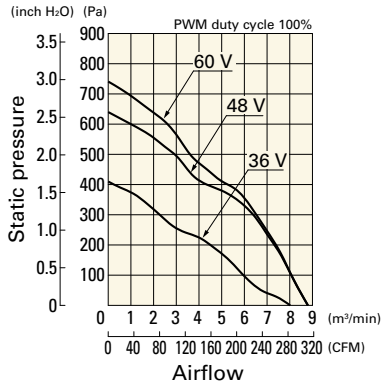

PWM duty - Speed characteristics example

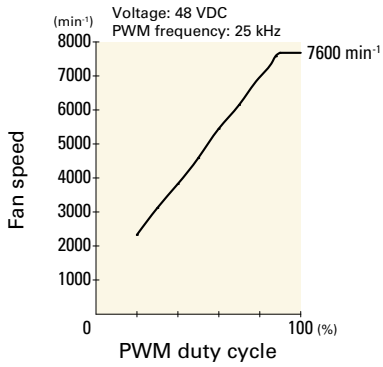

9GV1448P1S001 With pulse sensor with PWM control

PWM duty cycle

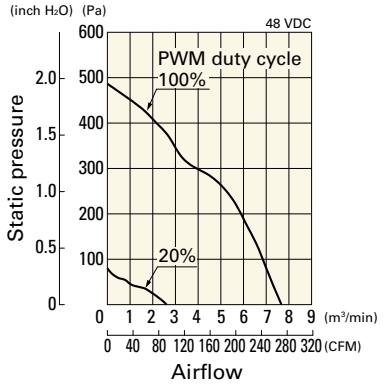

Operating voltage range

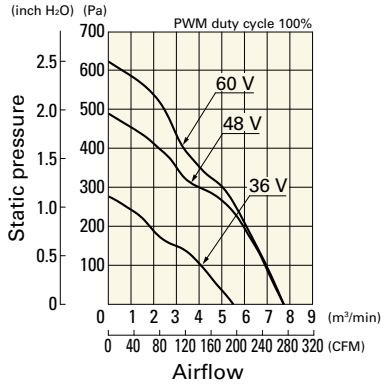

PWM duty - Speed characteristics example

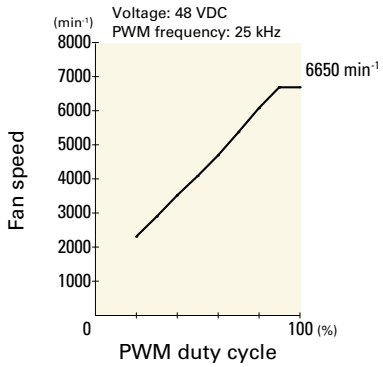

9GV1448P1H001 With pulse sensor with PWM control

PWM duty cycle

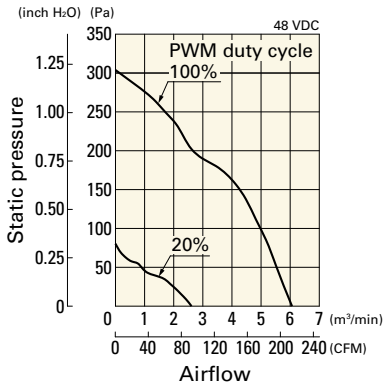

Operating voltage range

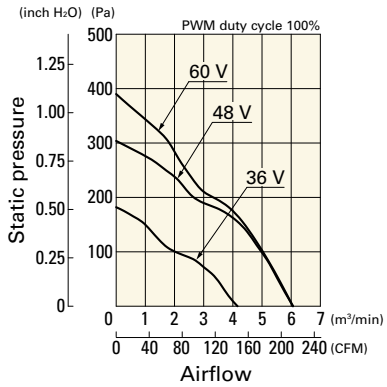

PWM duty - Speed characteristics example

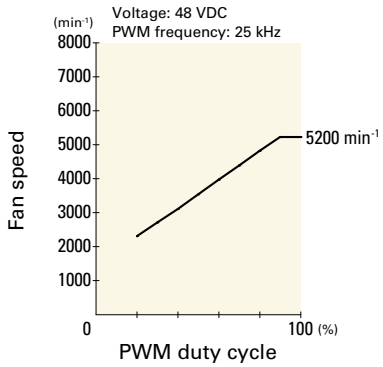

Dimensions (unit: mm)

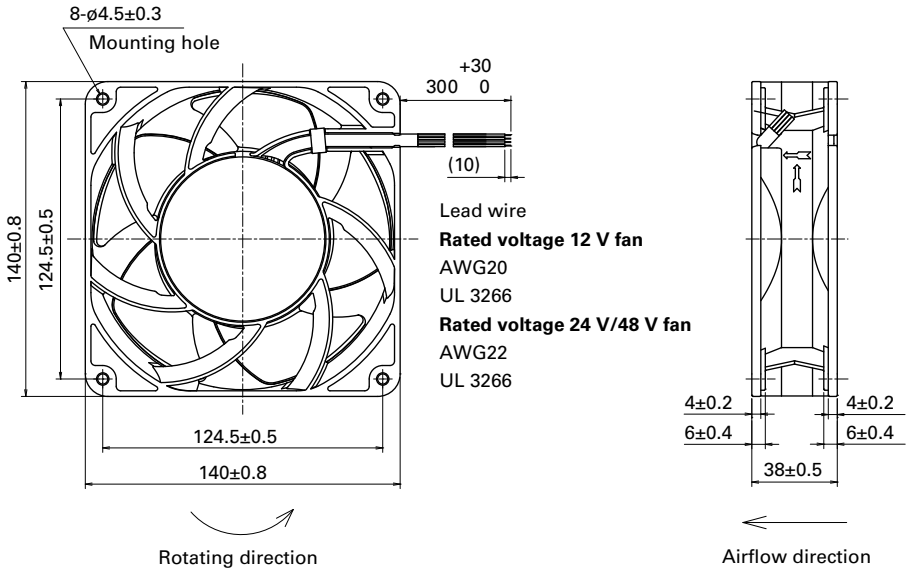

Reference Dimensions of Mounting Holes and Vent Opening (unit: mm)

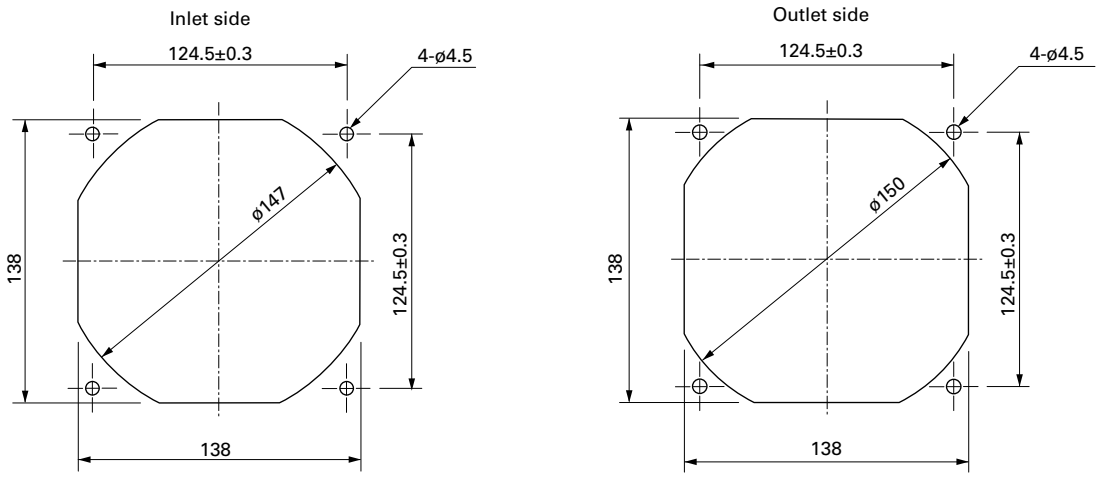

Options

Finger guards page: p. 591

Model no.: 109-719, 109-719H

140×140×38 mm

San Ace 140 9RA type

General Specifications

- Material ..... Frame: Plastic (Flammability: UL 94V-0), Impeller: Plastic (Flammability: UL 94V-0)
- Expected life ..... See the table below. (L10 life: 90% survival rate for continuous operation in free air at 60˚C, rated voltage) Expected life at 40°C is for reference only.
- Motor protection function ..... Locked rotor burnout protection, Reverse polarity protection For details, please refer to p. 608.
- Dielectric strength ..... 50/60 Hz, 500 VAC, for 1 minute (between lead wire conductors and frame)
- Insulation resistance ..... 10 MΩ min. at 500 VDC (between lead wire conductors and frame)
- Sound pressure level (SPL) ..... A-weighted sound pressure level (SPL) at 1 m away from the air inlet.
- Storage temperature ..... -30 to +70˚C (Non-condensing)
- Lead wire ..... ⊕Red ⊖Black Sensor Yellow Control Brown (For models without PWM control, there is no speed control wiring.)
- Mass ..... 360 g

Specifications

The models listed below **have ribs and a pulse sensor with PWM control.** For models without ribs, append "1" to the end of model numbers.

Model no.	Rated voltage [V]	Operating voltage range [V]	PWM duty cycle* [%]	Rated current [A]	Rated input [W]	Rated speed [min⁻¹]	Max. airflow [m³/min]	Max. airflow [CFM]	Max. static pressure [Pa]	Max. static pressure [inchH₂O]	SPL [dB (A)]	Operating temperature [˚C]	Expected life [h]
9RA1412P1G001	12	10.8 to 13.2	100	1.10	13.2	4250	6.0	212	160	0.64	52	-20 to +70	40000/60˚C (70000/40˚C)
			20	0.09	1.1	1250	1.81	64.0	16.3	0.065	19		
9RA1424P1G001	24	21.6 to 26.4	100	0.53	12.7	4250	6.0	212	160	0.64	52		
			20	0.05	1.2	1400	2.17	76.7	21.5	0.086	22		
9RA1448P1G001	48	43.2 to 52.8	100	0.28	13.4	4250	6.0	212	160	0.64	52		
			30	0.04	1.9	1600	2.32	82.0	29.5	0.118	25		

PWM frequency is 25 kHz. Models without ratings for 0% PWM duty cycle have zero speed at 0%. When control terminal is open, speed is the same as at 100% duty cycle.

The models listed below **have ribs and a pulse sensor.** For models without ribs, append "1" to the end of model numbers.

Model no.	Rated voltage [V]	Operating voltage range [V]	Rated current [A]	Rated input [W]	Rated speed [min⁻¹]	Max. airflow [m³/min]	Max. airflow [CFM]	Max. static pressure [Pa]	Max. static pressure [inchH₂O]	SPL [dB (A)]	Operating temperature [˚C]	Expected life [h]
9RA1412S1001	12	7 to 13.8	0.75	9.0	3750	5.3	187	130	0.52	49	-20 to +70	40000/60˚C (70000/40˚C)
9RA1412H1001			0.43	5.2	3050	4.3	152	92	0.37	43		
9RA1412M1001			0.19	2.3	2250	3.2	113	54	0.22	35		
9RA1424S1001	24	14 to 27.6	0.37	8.9	3750	5.3	187	130	0.52	49		
9RA1424H1001			0.22	5.3	3050	4.3	152	92	0.37	43		
9RA1424M1001			0.10	2.4	2250	3.2	113	54	0.22	35		
9RA1448S1001	48	40.8 to 55.2	0.21	10.1	3750	5.3	187	130	0.52	49		
9RA1448H1001			0.13	6.2	3050	4.3	152	92	0.37	43		
9RA1448M1001			0.06	2.9	2250	3.2	113	54	0.22	35		

Note 1: Sensor and control options are available for selection. Refer to the table on p. 648.
Note 2: The mark indicates Short LeadTime Service applicable models. See p. 664 for details.

Airflow - Static Pressure Characteristics / PWM Duty - Speed Characteristics Example

9RA1412P1G001 With pulse sensor with PWM control

PWM duty cycle

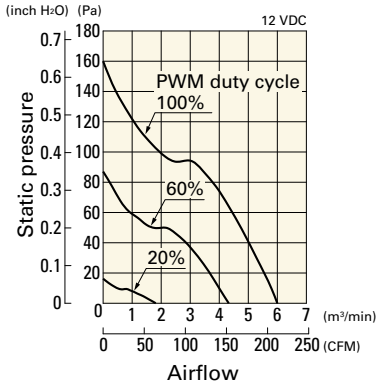

Operating voltage range

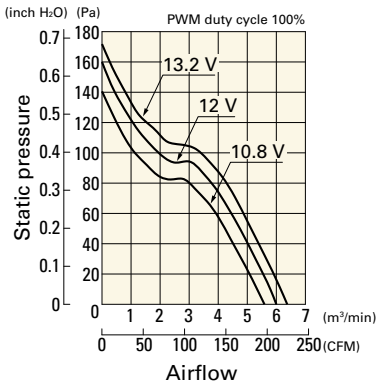

PWM duty - Speed characteristics example

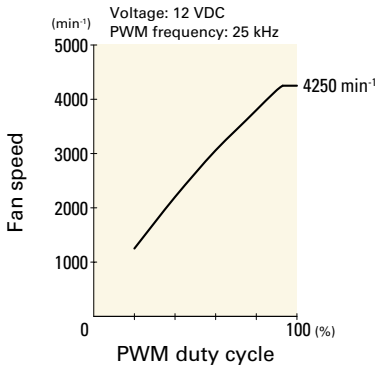

9RA1424P1G001 With pulse sensor with PWM control

PWM duty cycle

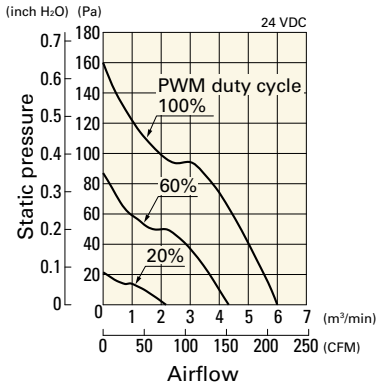

Operating voltage range

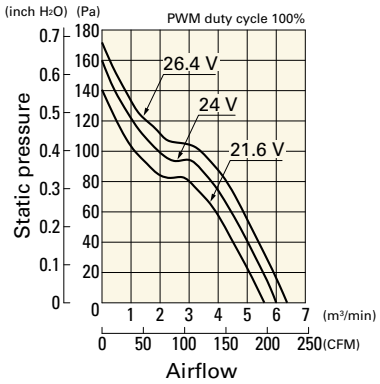

PWM duty - Speed characteristics example

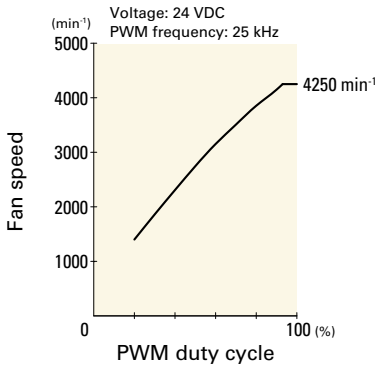

9RA1448P1G001 With pulse sensor with PWM control

PWM duty cycle

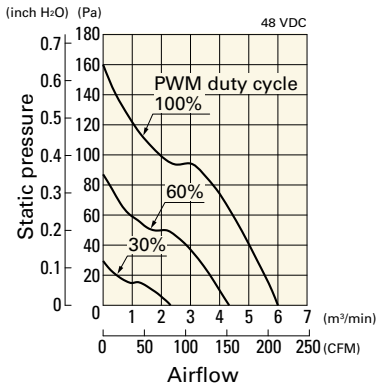

Operating voltage range

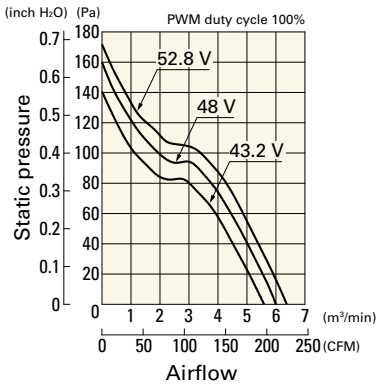

PWM duty - Speed characteristics example

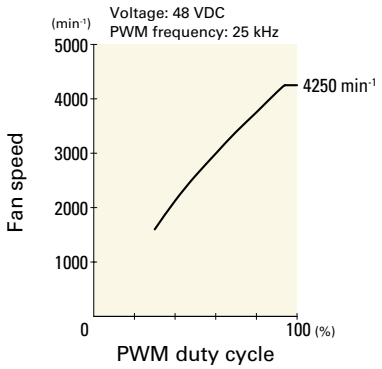

Airflow - Static Pressure Characteristics

9RA1412S1001 With pulse sensor

Operating voltage range

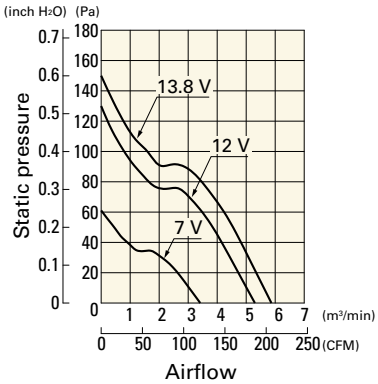

9RA1412H1001 With pulse sensor

Operating voltage range

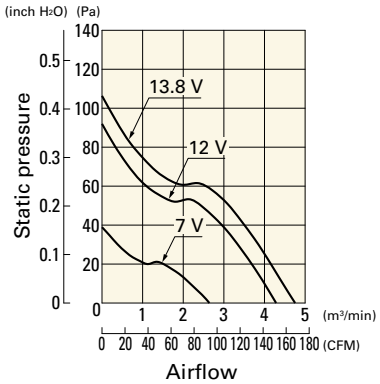

9RA1412M1001 With pulse sensor

Operating voltage range

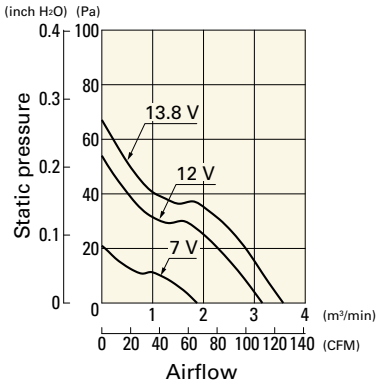

9RA1424S1001 With pulse sensor

Operating voltage range

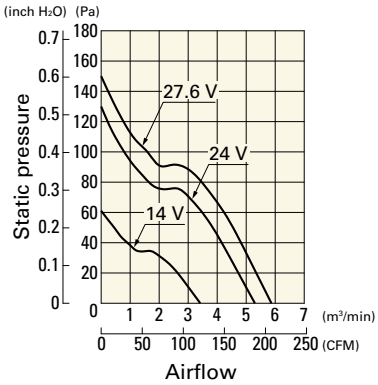

9RA1424H1001 With pulse sensor

Operating voltage range

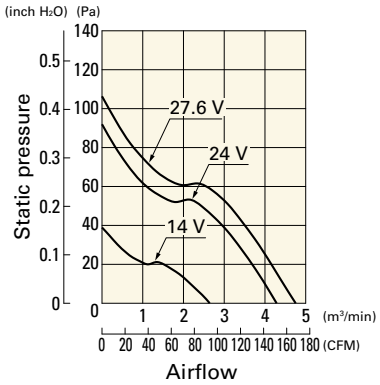

9RA1424M1001 With pulse sensor

Operating voltage range

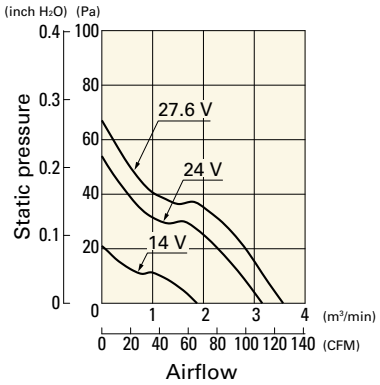

9RA1448S1001 With pulse sensor

Operating voltage range

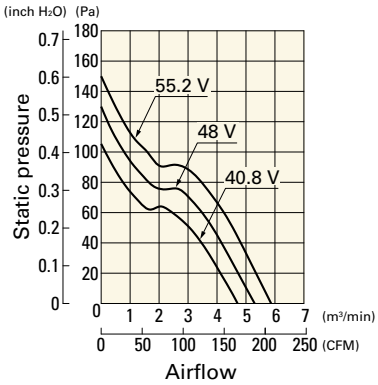

9RA1448H1001 With pulse sensor

Operating voltage range

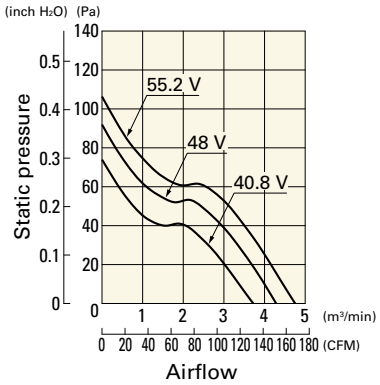

9RA1448M1001 With pulse sensor

Operating voltage range

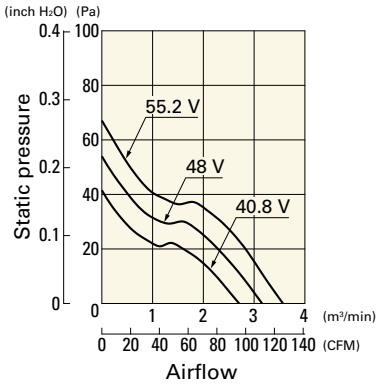

Dimensions (unit: mm) (Ribbed frame with pulse sensor with PWM control)

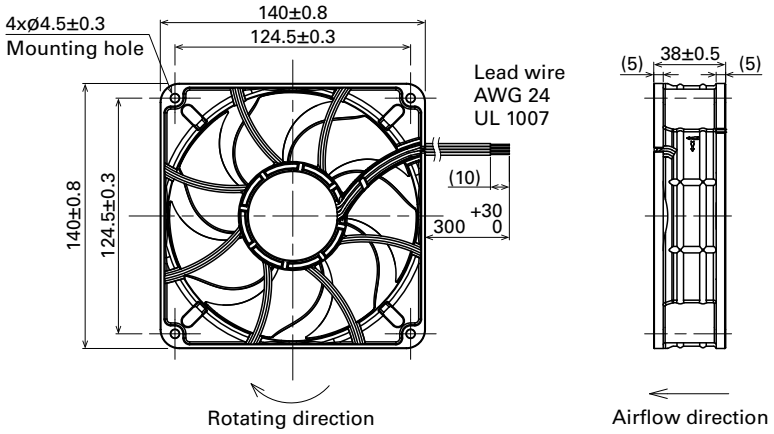

Reference Dimensions of Mounting Holes and Vent Opening (unit: mm)

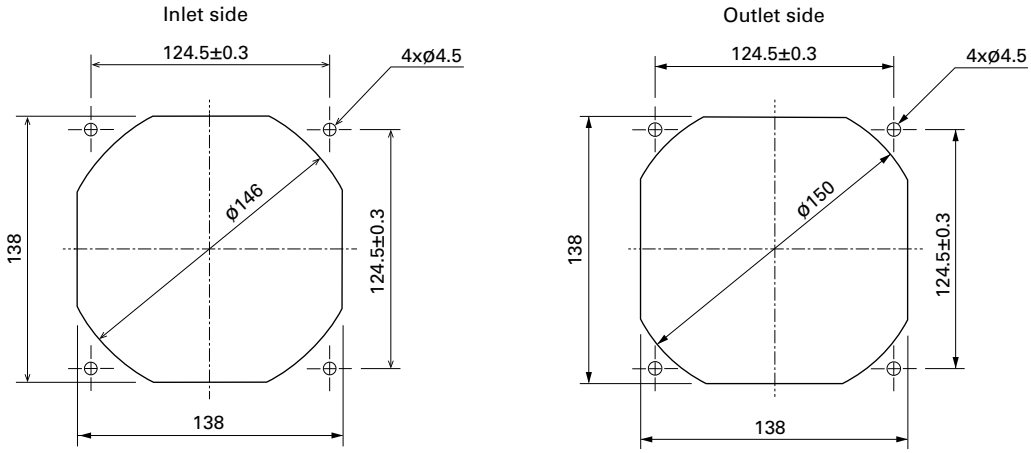

Options

Finger guards page: p. 591

Model no.: 109-719, 109-719H

150×150×50 mm

San Ace 150 9GV type

General Specifications

- Material ..... Frame: Plastic (Flammability: UL 94V-0), Impeller: Plastic (Flammability: UL 94V-1)
- Expected life ..... See the table below. (L10 life: 90% survival rate for continuous operation in free air at 60˚C, rated voltage) Expected life at 40°C is for reference only.
- Motor protection function ..... Locked rotor burnout protection, Reverse polarity protection For details, please refer to p. 608.
- Dielectric strength ..... 50/60 Hz, 500 VAC, for 1 minute (between lead wire conductors and frame)
- Insulation resistance ..... 10 MΩ min. at 500 VDC (between lead wire conductors and frame)
- Sound pressure level (SPL) ..... A-weighted sound pressure level (SPL) at 1 m away from the air inlet.
- Storage temperature ..... -30 to +70˚C (Non-condensing)
- Lead wire ..... ⊕Red ⊖Black or Blue Sensor Yellow
- Mass ..... 450 g

Specifications

The models listed below **have ribs and a pulse sensor.** For models without ribs, append "1" to the end of model numbers.

Model no.	Rated voltage [V]	Operating voltage range [V]	Rated current [A]	Rated input [W]	Rated speed [min⁻¹]	Max. airflow [m³/min]	Max. airflow [CFM]	Max. static pressure [Pa]	Max. static pressure [inchH₂O]	SPL [dB (A)]	Operating temperature [˚C]	Expected life [h]
9GV1512H501	12	10.2 to 13.8	2.9	34.8	3900	8.54	300	210	0.84	61	-20 to +70	40000/60˚C (70000/40˚C)
9GV1512M501			1.2	14.4	3000	6.35	224	132	0.53	53		
9GV1524M501	24	20.4 to 27.6	0.6	14.4	3000	6.35	224	132	0.53	53		

Note: Sensor and control options are available for selection. Refer to the table on p. 642.

Airflow - Static Pressure Characteristics

9GV1512H501 With pulse sensor

Operating voltage range

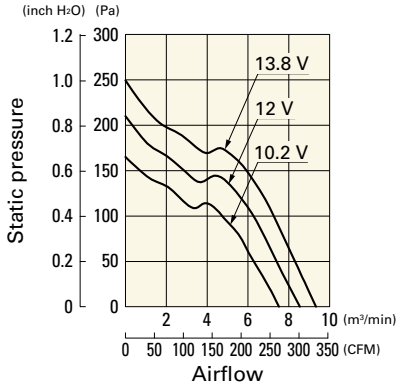

9GV1512M501 With pulse sensor

Operating voltage range

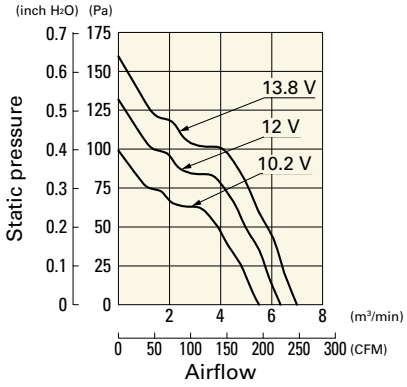

9GV1524M501 With pulse sensor

Operating voltage range

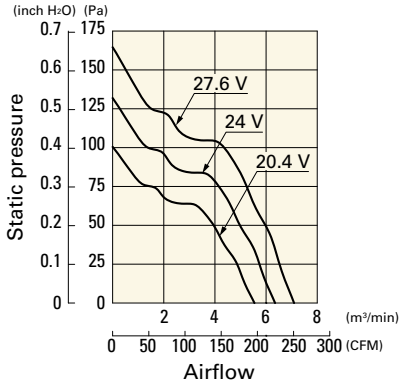

Dimensions (unit: mm) (With ribs)

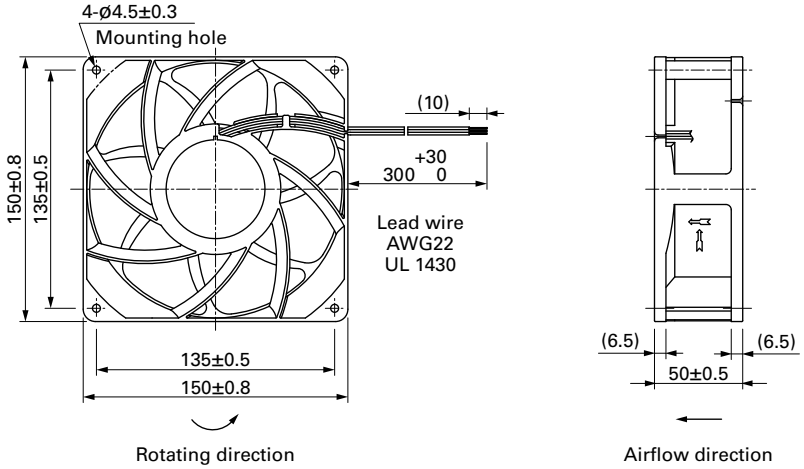

Reference Dimensions of Mounting Holes and Vent Opening (unit: mm)

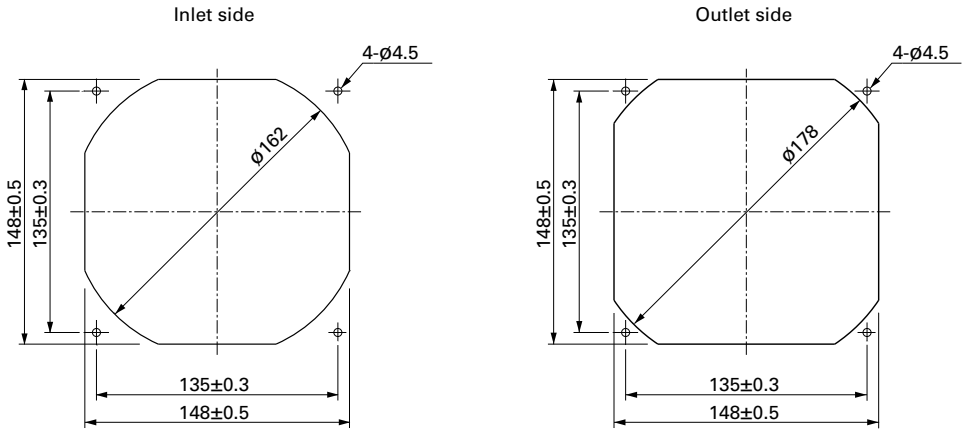

Options

Finger guards page: p. 591

Model no.: 109-1051

ø172×147×25 mm

San Ace 172 9E type

Sidecut type

General Specifications

- Material ..... Frame: Aluminum, Impeller: Plastic (Flammability: UL 94V-1)
- Expected life ..... See the table below. (L10 life: 90% survival rate for continuous operation in free air at 60˚C, rated voltage) Expected life at 40°C is for reference only.
- Motor protection function ..... Locked rotor burnout protection, Reverse polarity protection For details, please refer to p. 608.
- Dielectric strength ..... 50/60 Hz, 500 VAC, for 1 minute (between lead wire conductors and frame)
- Insulation resistance ..... 10 MΩ min. at 500 VDC (between lead wire conductors and frame)
- Sound pressure level (SPL) ..... A-weighted sound pressure level (SPL) at 1 m away from the air inlet.
- Storage temperature ..... -30 to +70˚C (Non-condensing)
- Lead wire ..... ⊕Red ⊖Black or Blue Sensor Yellow
- Mass ..... 500 g

Specifications

The models listed below **have a pulse sensor.**

Model no.	Rated voltage [V]	Operating voltage range [V]	Rated current [A]	Rated input [W]	Rated speed [min⁻¹]	Max. airflow [m³/min]	Max. airflow [CFM]	Max. static pressure [Pa]	Max. static pressure [inchH₂O]	SPL [dB (A)]	Operating temperature [˚C]	Expected life [h]
109E4712M401	12	10.2 to 13.8	1.3	15.6	2800	5.2	183	92	0.369	51	-20 to +60	40000/60˚C (70000/40˚C)
109E4712L401			1.0	12.0	2500	4.6	162	73	0.293	48		
109E4724H401	24	20.4 to 27.6	1.0	24.0	3400	6.4	226	135	0.542	57		
109E4724F401			0.79	19.0	3100	5.8	204	112	0.45	54		
109E4724M401			0.58	13.9	2800	5.2	183	92	0.369	51		
109E4724L401			0.44	10.6	2500	4.6	162	73	0.293	48		
109E4748S401	48	40.8 to 55.2	0.62	29.8	3650	6.8	240	156	0.627	58		
109E4748H401			0.52	25.0	3400	6.4	226	135	0.542	57		
109E4748F401			0.4	19.2	3100	5.8	204	112	0.45	54		
109E4748M401			0.32	15.4	2800	5.2	183	92	0.369	51		
109E4748L401			0.25	12.0	2500	4.6	162	73	0.293	48		

Note: Sensor and control options are available for selection. Refer to the table on p. 634.

Airflow - Static Pressure Characteristics

109E4712M401 With pulse sensor

Operating voltage range

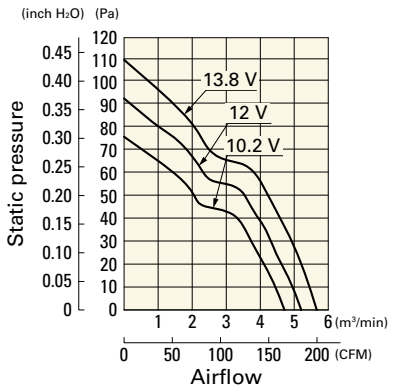

109E4712L401 With pulse sensor

Operating voltage range

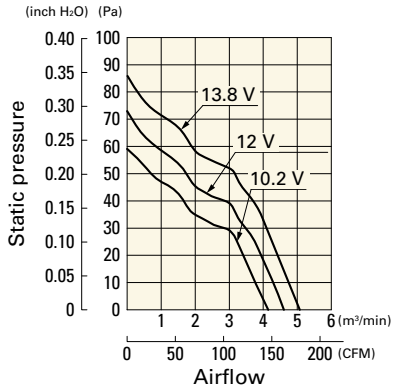

109E4724H401 With pulse sensor

Operating voltage range

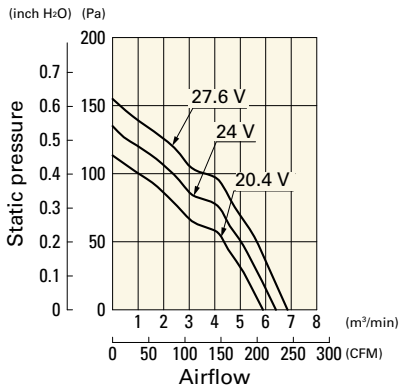

Airflow - Static Pressure Characteristics

109E4724F401 With pulse sensor

Operating voltage range

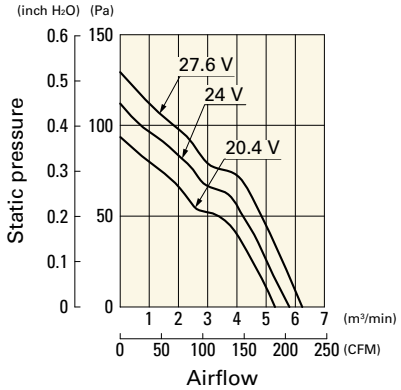

109E4724M401 With pulse sensor

Operating voltage range

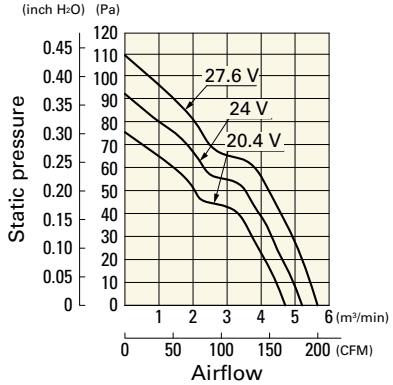

109E4724L401 With pulse sensor

Operating voltage range

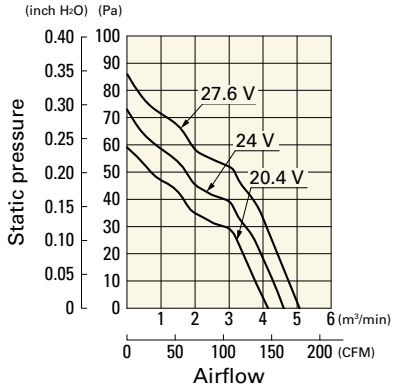

109E4748S401 With pulse sensor

Operating voltage range

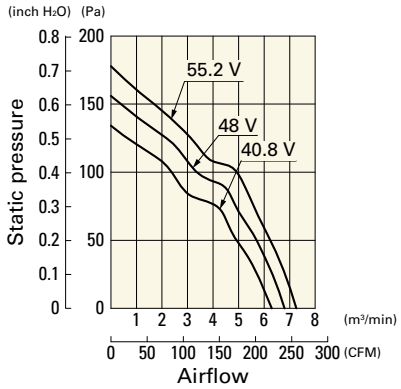

109E4748H401 With pulse sensor

Operating voltage range

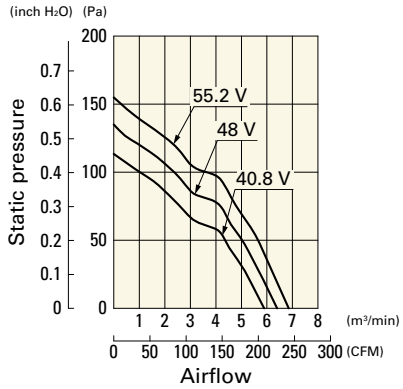

109E4748F401 With pulse sensor

Operating voltage range

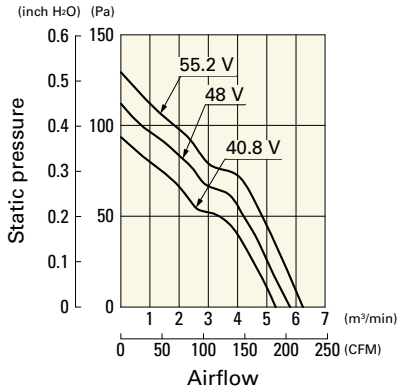

109E4748M401 With pulse sensor

Operating voltage range

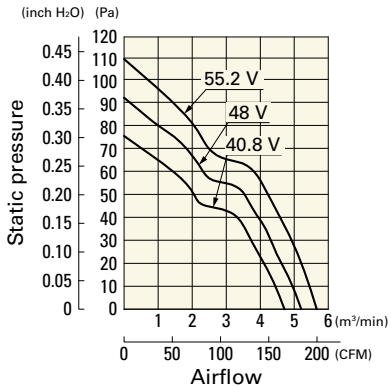

109E4748L401 With pulse sensor

Operating voltage range

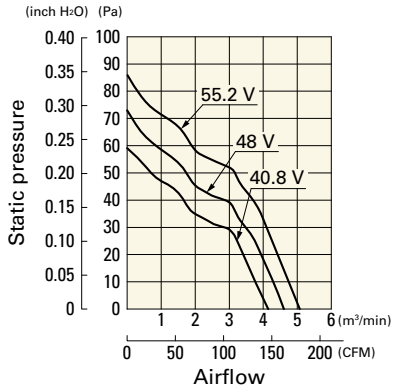

Dimensions (unit: mm)

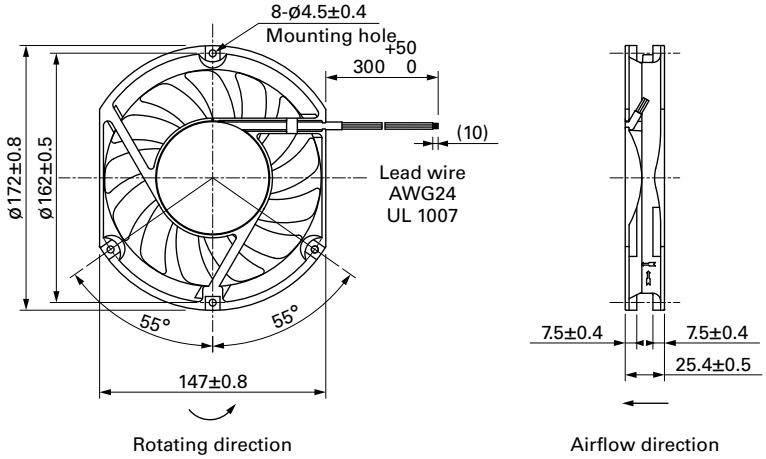

Reference Dimensions of Mounting Holes and Vent Opening (unit: mm)

Inlet side, Outlet side

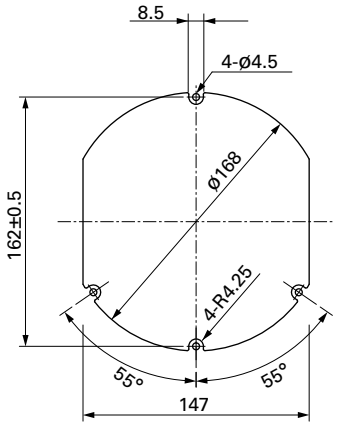

Options

Finger guards page: p. 592

Model no.: 109-319J, 109-319E, 109-319H

DC Fan

ø172×150×51 mm

San Ace 172 9HV type

Sidecut type

General Specifications

- Material ..... Frame: Aluminum, Impeller: Plastic (Flammability: UL 94V-1)
- Expected life ..... See the table below. (L10 life: 90% survival rate for continuous operation in free air at 60˚C, rated voltage) Expected life at 40°C is for reference only.
- Motor protection function ..... Locked rotor burnout protection, Reverse polarity protection For details, please refer to p. 608.
- Dielectric strength ..... 50/60 Hz, 500 VAC, for 1 minute (between lead wire conductors and frame)
- Insulation resistance ..... 10 MΩ min. at 500 VDC (between lead wire conductors and frame)
- Sound pressure level (SPL) ..... A-weighted sound pressure level (SPL) at 1 m away from the air inlet.
- Storage temperature ..... -30 to +70˚C (Non-condensing)
- Lead wire ..... ⊕Red ⊖Black Sensor Yellow Control Brown
- Mass ..... 800 g

Specifications

The models listed below **have a pulse sensor with PWM control.**

Model no.	Rated voltage [V]	Operating voltage range [V]	PWM duty cycle* [%]	Rated current [A]	Rated input [W]	Rated speed [min⁻¹]	Max. airflow [m³/min]	Max. airflow [CFM]	Max. static pressure [Pa]	Max. static pressure [inchH₂O]	SPL [dB (A)]	Operating temperature [˚C]	Expected life [h]
9HV5724P5H001	24	16 to 30	100	5.0	120	8000	12.3	434	1000	4.02	77	-20 to +70	40000/60˚C (70000/40˚C)
			20	0.5	12.0	3000	4.6	162	175	0.7	51		
9HV5748P5G001	48	36 to 72	100	5.0	240	10500	16.1	568	1600	6.43	83		
			20	0.41	19.7	3700	5.6	198	250	1.01	57		

PWM frequency is 25 kHz. Models without ratings for 0% PWM duty cycle have zero speed at 0%. When control terminal is open, speed is the same as at 100% duty cycle.

Note 1: Sensor and control options are available for selection. Refer to the table on p. 642.
Note 2: The » mark indicates Short LeadTime Service applicable models. See p. 664 for details.

Airflow - Static Pressure Characteristics / PWM Duty - Speed Characteristics Example

9HV5724P5H001 With pulse sensor with PWM control

PWM duty cycle

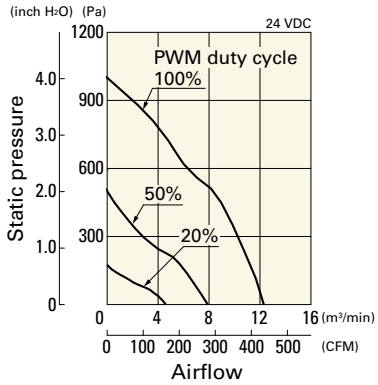

Operating voltage range

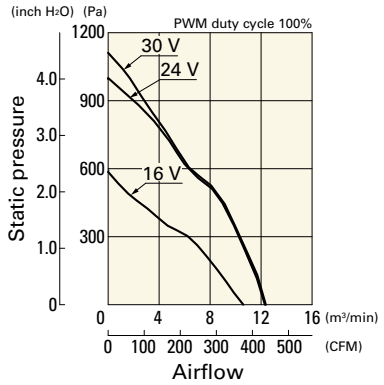

PWM duty - Speed characteristics example

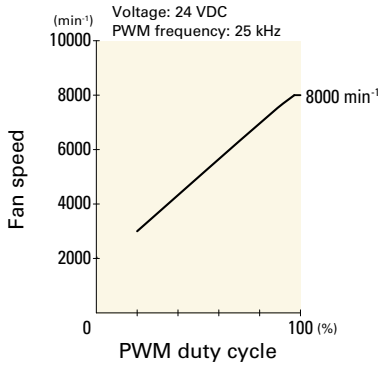

Airflow - Static Pressure Characteristics / PWM Duty - Speed Characteristics Example

9HV5748P5G001 With pulse sensor with PWM control

PWM duty cycle

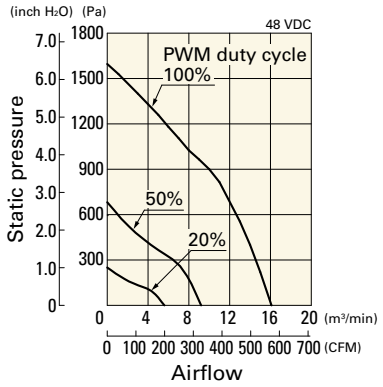

Operating voltage range

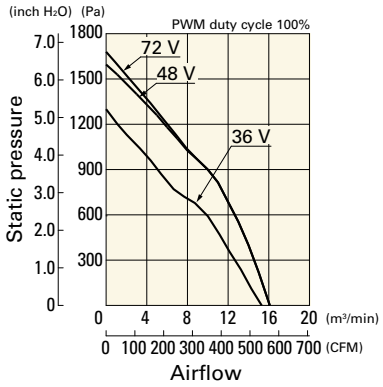

PWM duty - Speed characteristics example

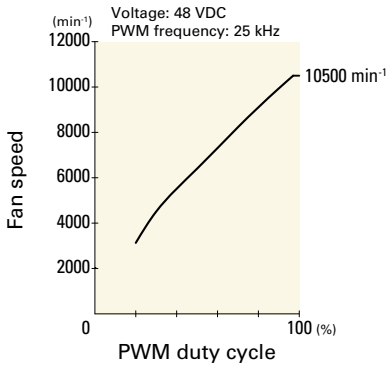

Dimensions (unit: mm)

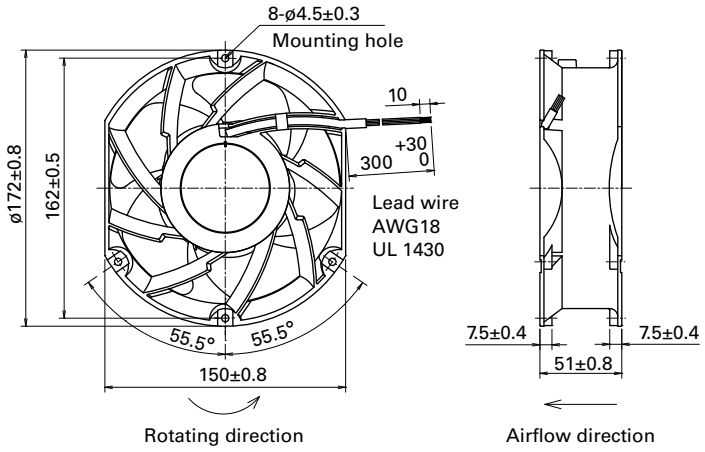

Reference Dimensions of Mounting Holes and Vent Opening (unit: mm)

Inlet side, Outlet side

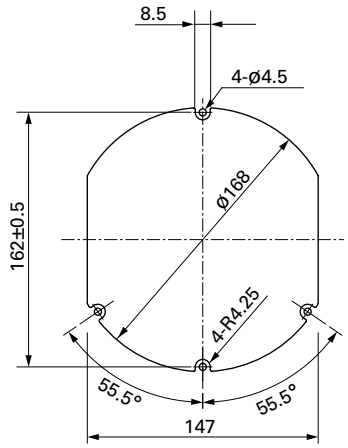

Options

Finger guards page: p. 592

Model no.: 109-1155

DC Fan

ø172×150×51 mm

San Ace 172 9SG type

Sidecut type

General Specifications

- Material ..... Frame: Aluminum, Impeller: Plastic (Flammability: UL 94V-0)
- Expected life ..... See the table below. (L10 life: 90% survival rate for continuous operation in free air at 60°C, rated voltage) Expected life at 40°C is for reference only.
- Motor protection function ..... Locked rotor burnout protection, Reverse polarity protection For details, please refer to p. 608.
- Dielectric strength ..... 50/60 Hz, 500 VAC, for 1 minute (between lead wire conductors and frame)
- Insulation resistance ..... 10 MΩ min. at 500 VDC (between lead wire conductors and frame)
- Sound pressure level (SPL) ..... A-weighted sound pressure level (SPL) at 1 m away from the air inlet.
- Storage temperature ..... -30 to +70°C (Non-condensing)
- Lead wire ..... ⊕Red ⊖Black Sensor Yellow Control Brown
- Mass ..... 760 g

Specifications

The models listed below **have ribs and a pulse sensor with PWM control.**

Model no.	Rated voltage [V]	Operating voltage range [V]	PWM duty cycle* [%]	Rated current [A]	Rated input [W]	Rated speed [min⁻¹]	Max. airflow [m³/min]	Max. airflow [CFM]	Max. static pressure [Pa]	Max. static pressure [inchH₂O]	SPL [dB (A)]	Operating temperature [°C]	Expected life [h]
9SG5724P5H61	24	20.4 to 27.6	100	2.8	67.2	6500	11.6	410	540	2.16	71	-20 to +70	40000/60°C (70000/40°C)
			0	0.18	4.32	1300	2.32	81.9	30	0.12	28		
9SG5748P5G01	48	36 to 72	100	2.91	140	8600	15.46	546	1000	4.02	78	-20 to +60	
			0	0.21	10.1	2000	3.59	127	75.1	0.3	40		
9SG5748P5H01			100	1.62	78	6500	11.6	410	770	3.09	71		
			0	0.21	10.1	2000	3.59	127	75.1	0.3	40		

PWM frequency is 25 kHz. Models without ratings for 0% PWM duty cycle have zero speed at 0%. When control terminal is open, speed is the same as at 100% duty cycle.

Note 1: Sensor and control options are available for selection. Refer to the table on p. 649.
Note 2: The » mark indicates Short LeadTime Service applicable models. See p. 664 for details.

Airflow - Static Pressure Characteristics / PWM Duty - Speed Characteristics Example

9SG5724P5H61 With pulse sensor with PWM control

PWM duty cycle

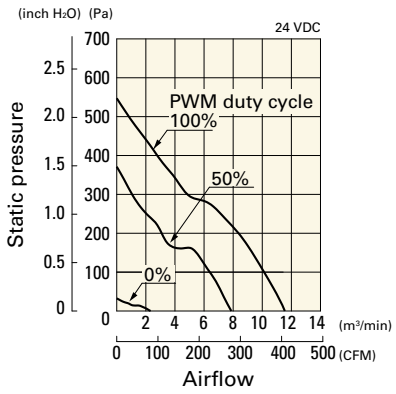

Operating voltage range

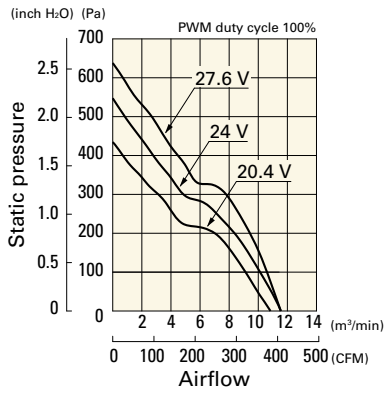

PWM duty - Speed characteristics example

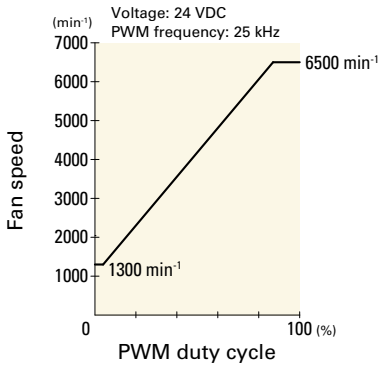

Airflow - Static Pressure Characteristics / PWM Duty - Speed Characteristics Example

9SG5748P5G01 With pulse sensor with PWM control

PWM duty cycle

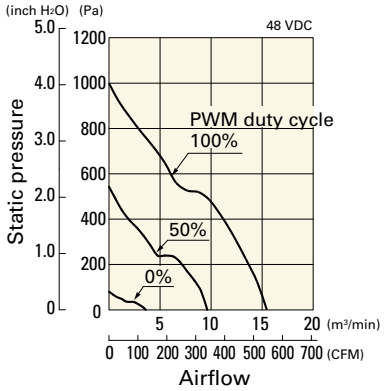

Operating voltage range

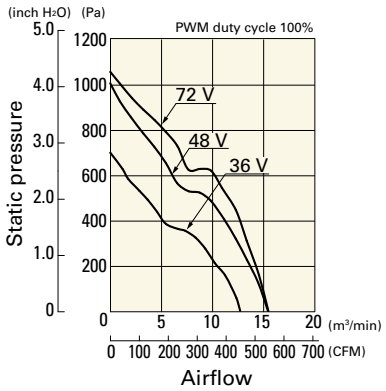

PWM duty - Speed characteristics example

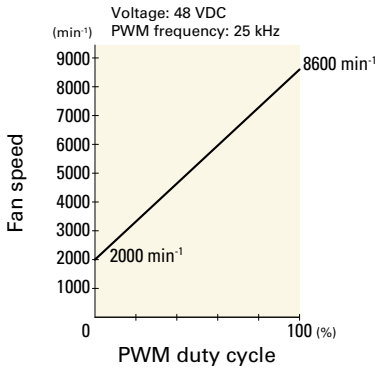

9SG5748P5H01 With pulse sensor with PWM control

PWM duty cycle

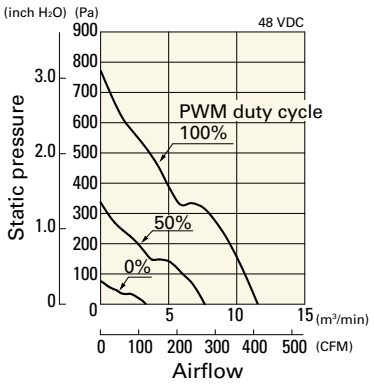

Operating voltage range

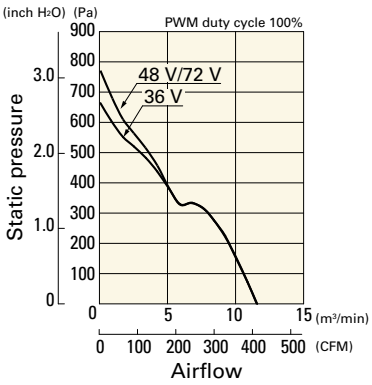

PWM duty - Speed characteristics example

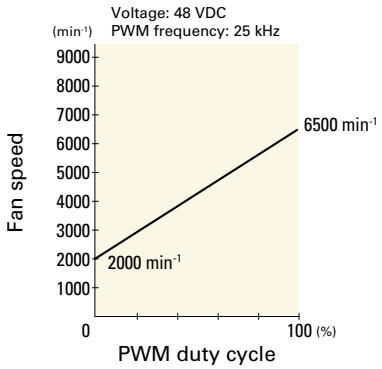

Dimensions (unit: mm)

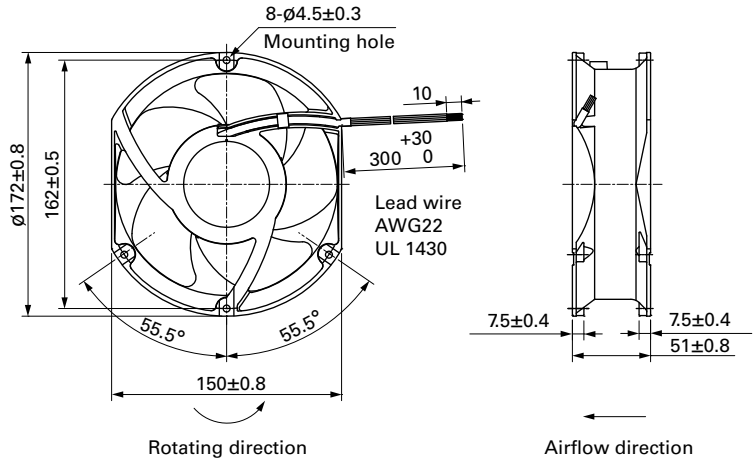

Reference Dimensions of Mounting Holes and Vent Opening (unit: mm)

Inlet side, Outlet side

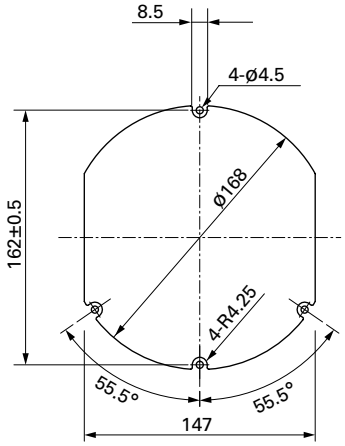

Options

Finger guards	page: p. 592

Model no.: 109-1155

ø172×150×51 mm

San Ace 172 9E type

Sidecut type

General Specifications

- Material ..... Frame: Aluminum, Impeller: Plastic (Flammability: UL 94V-1)
- Expected life ..... See the table below. (L10 life: 90% survival rate for continuous operation in free air at 60˚C, rated voltage) Expected life at 40°C is for reference only.
- Motor protection function ..... Locked rotor burnout protection, Reverse polarity protection For details, please refer to p. 608.
- Dielectric strength ..... 50/60 Hz, 500 VAC, for 1 minute (between lead wire conductors and frame)
- Insulation resistance ..... 10 MΩ min. at 500 VDC (between lead wire conductors and frame)
- Sound pressure level (SPL) ..... A-weighted sound pressure level (SPL) at 1 m away from the air inlet.
- Storage temperature ..... -30 to +70˚C (Non-condensing)
- Lead wire ..... ⊕Red ⊖Black or Blue Sensor Yellow
- Mass ..... 760 g

Specifications

The models listed below **have a pulse sensor.**

Model no.	Rated voltage [V]	Operating voltage range [V]	Rated current [A]	Rated input [W]	Rated speed [min⁻¹]	Max. airflow [m³/min]	Max. airflow [CFM]	Max. static pressure [Pa]	Max. static pressure [inchH₂O]	SPL [dB (A)]	Operating temperature [˚C]	Expected life [h]
109E5712K501	12	10.2 to 13.8	2.9	34.8	4100	8.5	300	243.0	0.976	60	-20 to +60	40000/60˚C (70000/40˚C)
109E5712Y501			2.3	27.6	3800	8	282	210	0.84	60		
109E5712H501			1.2	14.4	3050	6.4	226	137.2	0.551	52	-20 to +70	
109E5712F501			0.68	8.16	2500	5.1	180	95	0.38	47		
109E5712M501			0.48	5.76	2000	4.2	148	67.6	0.271	41		
109E5724C501	24	20.4 to 27.6	2.3	55.2	4800	9.9	350	308.0	1.237	66		
109E5724K501			1.3	31.2	4100	8.5	300	243.0	0.976	60		
109E5724H501			0.58	13.92	3050	6.4	226	137.2	0.551	52		
109E5724F501			0.35	8.4	2500	5.1	180	95	0.38	47		
109E5724M501			0.2	4.8	2000	4.2	148	67.6	0.271	41		
109E5748C501	48	40.8 to 55.2	1.2	57.6	4800	9.9	350	308.0	1.237	66		
109E5748K501			0.7	33.6	4100	8.5	300	243.0	0.976	60	-20 to +60	
109E5748H501			0.28	13.44	3050	6.4	226	137.2	0.551	52	-20 to +70	
109E5748F501			0.19	9.12	2500	5.1	180	95	0.38	47		
109E5748M501			0.11	5.28	2000	4.2	148	67.6	0.271	41		

Note 1: Sensor and control options are available for selection. Refer to the table on pp. 634 to 635.
Note 2: The » mark indicates Short LeadTime Service applicable models. See p. 664 for details.

Airflow - Static Pressure Characteristics

109E5712K501 With pulse sensor

Operating voltage range

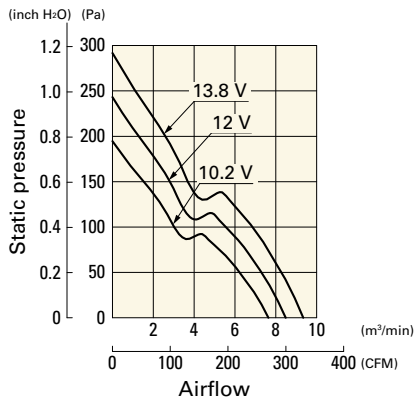

109E5712Y501 With pulse sensor

Operating voltage range

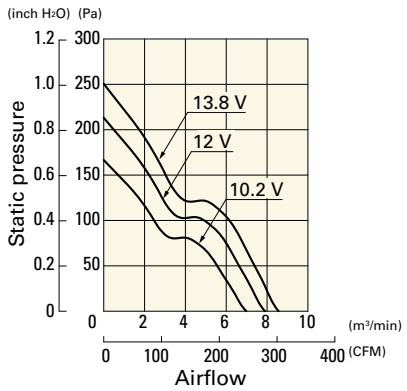

109E5712H501 With pulse sensor

Operating voltage range

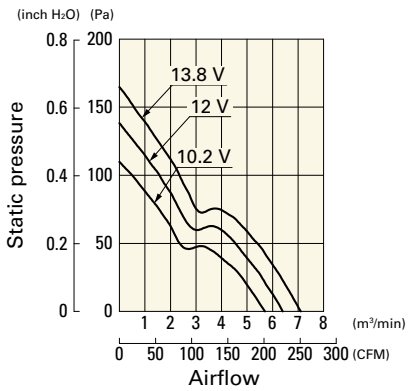

Airflow - Static Pressure Characteristics

109E5712F501 With pulse sensor

Operating voltage range

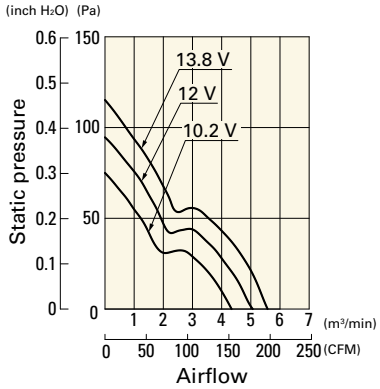

109E5712M501 With pulse sensor

Operating voltage range

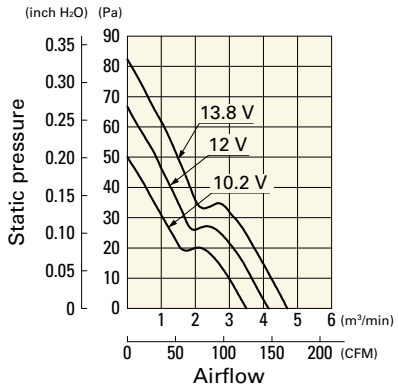

109E5724C501 With pulse sensor

Operating voltage range

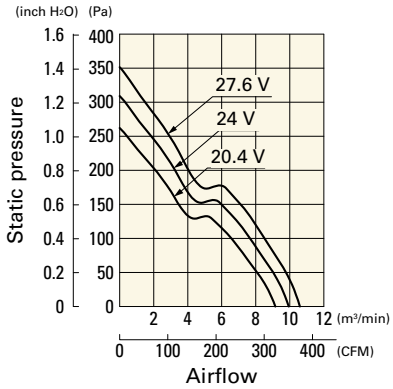

109E5724K501 With pulse sensor

Operating voltage range

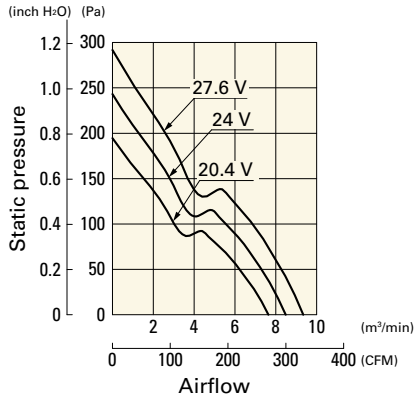

109E5724H501 With pulse sensor

Operating voltage range

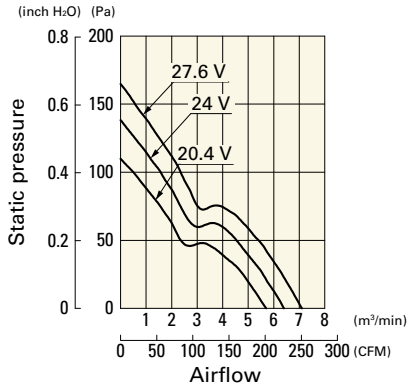

109E5724F501 With pulse sensor

Operating voltage range

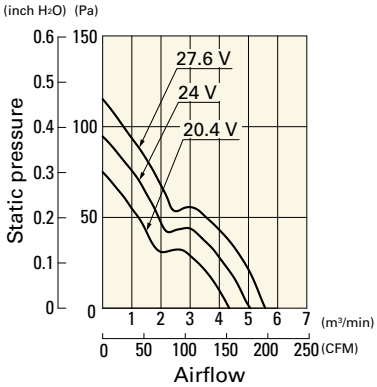

109E5724M501 With pulse sensor

Operating voltage range

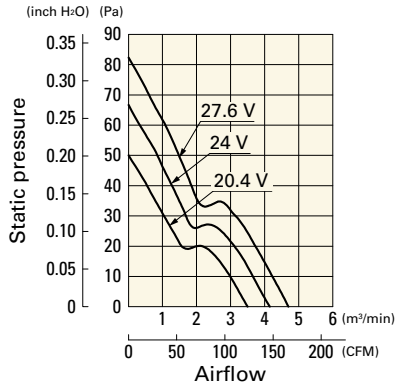

109E5748C501 With pulse sensor

Operating voltage range

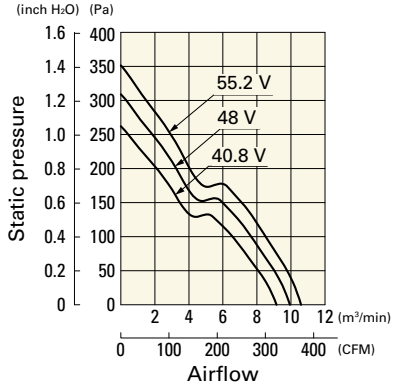

109E5748K501 With pulse sensor

Operating voltage range

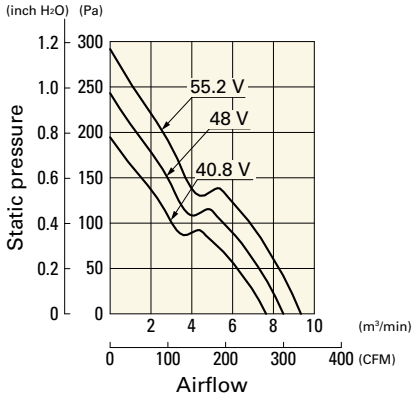

109E5748H501 With pulse sensor

Operating voltage range

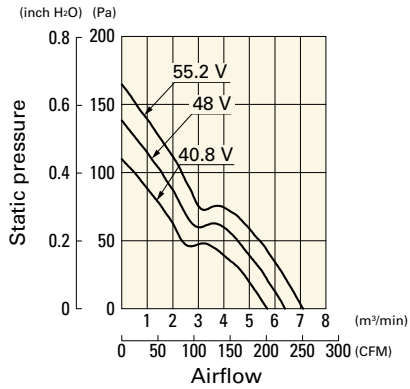

109E5748F501 With pulse sensor

Operating voltage range

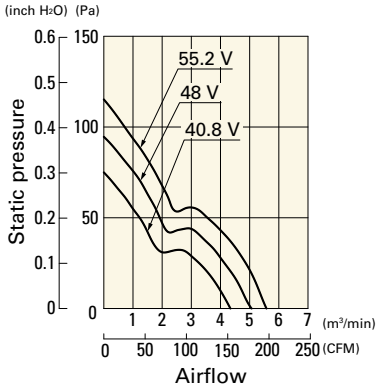

109E5748M501 With pulse sensor

Operating voltage range

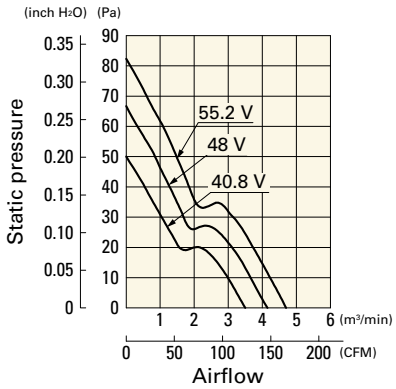

Dimensions (unit: mm)

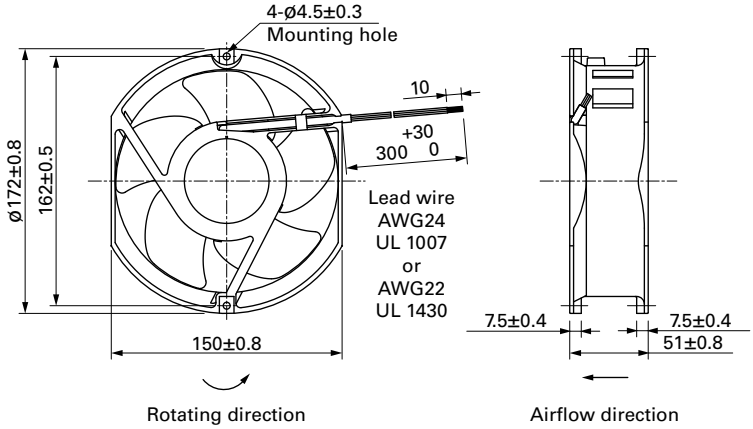

Reference Dimensions of Mounting Holes and Vent Opening (unit: mm)

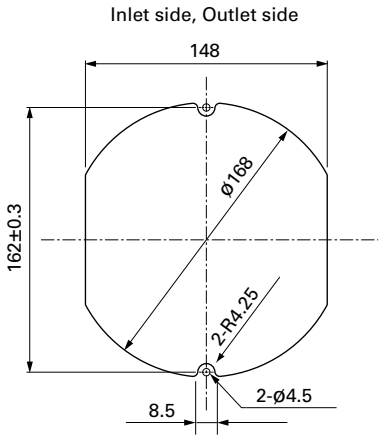

Options

Finger guards page: p. 592

Model no.: 109-319J, 109-319E, 109-319H

DC Fan

ø172×51 mm

San Ace 172 9E type

Round type

General Specifications

- Material ..... Frame: Aluminum, Impeller: Plastic (Flammability: UL 94V-1)
- Expected life ..... See the table below. (L10 life: 90% survival rate for continuous operation in free air at 60˚C, rated voltage) Expected life at 40°C is for reference only.
- Motor protection function ..... Locked rotor burnout protection, Reverse polarity protection For details, please refer to p. 608.
- Dielectric strength ..... 50/60 Hz, 500 VAC, for 1 minute (between lead wire conductors and frame)
- Insulation resistance ..... 10 MΩ min. at 500 VDC (between lead wire conductors and frame)
- Sound pressure level (SPL) ..... A-weighted sound pressure level (SPL) at 1 m away from the air inlet.
- Storage temperature ..... -30 to +70˚C (Non-condensing)
- Lead wire ..... ⊕Red ⊖Black or Blue Sensor Yellow
- Mass ..... 780 g

Specifications

The models listed below **have a pulse sensor.**

Model no.	Rated voltage [V]	Operating voltage range [V]	Rated current [A]	Rated input [W]	Rated speed [min⁻¹]	Max. airflow [m³/min]	Max. airflow [CFM]	Max. static pressure [Pa]	Max. static pressure [inchH₂O]	SPL [dB (A)]	Operating temperature [˚C]	Expected life [h]
109E1712K501	12	10.2 to 13.8	2.9	34.8	4100	8.5	300	243.0	0.976	55	-20 to +60	40000/60˚C (70000/40˚C)
109E1712Y501			2.3	27.6	3800	7.8	276	210.0	0.843	53		
109E1712H501			1.2	14.4	3050	6.4	226	137.2	0.551	47	-20 to +70	
109E1712F501			0.68	10.8	2500	5.1	180	95.0	0.382	42		
109E1712M501			0.48	5.76	2000	4.2	148	67.6	0.271	36		
109E1724C501	24	20.4 to 27.6	2.3	55.2	4800	9.9	350	308.0	1.237	60		
109E1724K501			1.3	31.2	4100	8.5	300	243.0	0.976	55		
109E1724H501			0.58	13.92	3050	6.4	226	137.2	0.551	47		
109E1724F501			0.35	8.4	2500	5.1	180	95	0.382	42		
109E1724M501			0.2	4.8	2000	4.2	148	67.6	0.271	36		
109E1748C501	48	40.8 to 55.2	1.2	57.6	4800	9.9	350	308.0	1.237	60		
109E1748K501			0.7	33.6	4100	8.5	300	243.0	0.976	55	-20 to +60	
109E1748H501			0.28	13.44	3050	6.4	226	137.2	0.551	47	-20 to +70	
109E1748F501			0.19	9.12	2500	5.1	180	95	0.382	42		
109E1748M501			0.11	5.28	2000	4.2	148	67.6	0.271	36		

Note 1: Sensor and control options are available for selection. Refer to the table on p. 634.
Note 2: The » mark indicates Short LeadTime Service applicable models. See p. 664 for details.

Airflow - Static Pressure Characteristics

109E1712K501 With pulse sensor

Operating voltage range

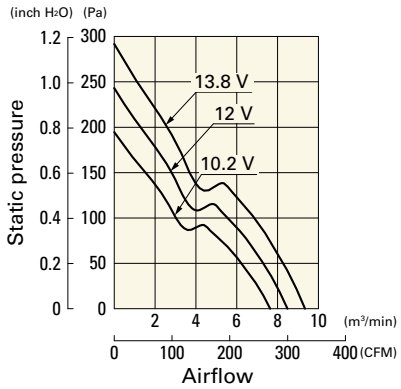

109E1712Y501 With pulse sensor

Operating voltage range

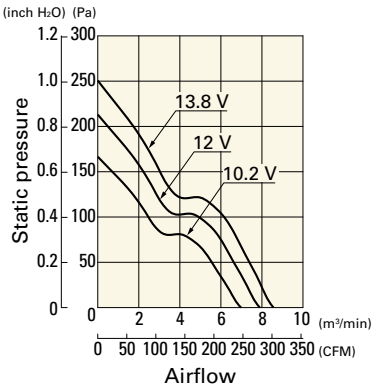

109E1712H501 With pulse sensor

Operating voltage range

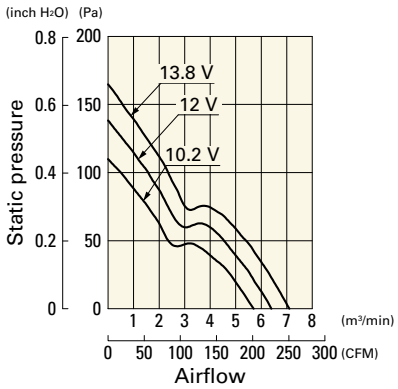

Airflow - Static Pressure Characteristics

109E1712F501 With pulse sensor

Operating voltage range

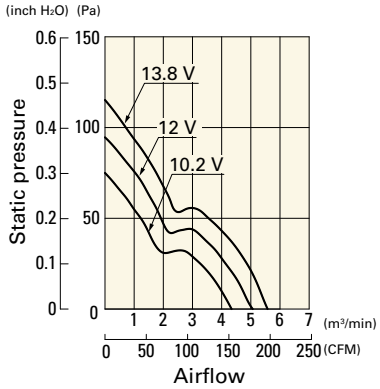

109E1712M501 With pulse sensor

Operating voltage range

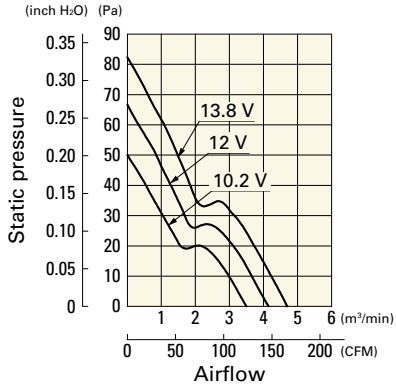

109E1724C501 With pulse sensor

Operating voltage range

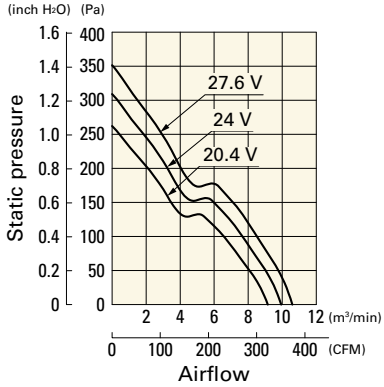

109E1724K501 With pulse sensor

Operating voltage range

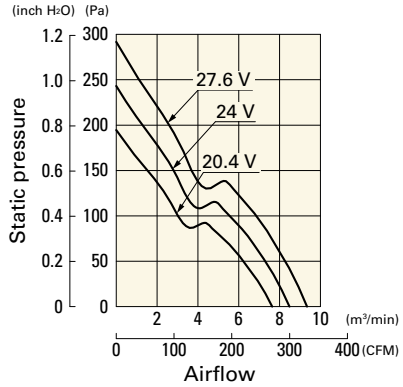

109E1724H501 With pulse sensor

Operating voltage range

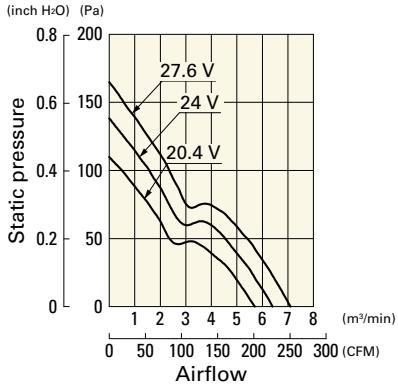

109E1724F501 With pulse sensor

Operating voltage range

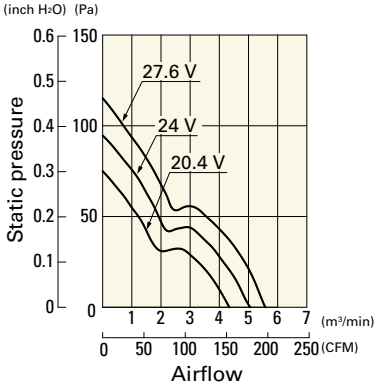

109E1724M501 With pulse sensor

Operating voltage range

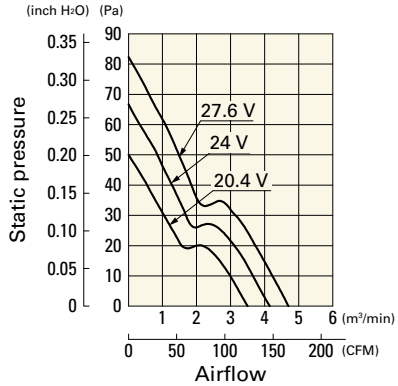

109E1748C501 With pulse sensor

Operating voltage range

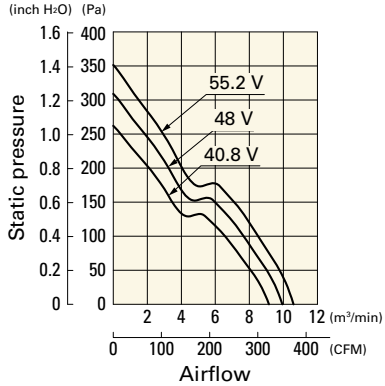

109E1748K501 With pulse sensor

Operating voltage range

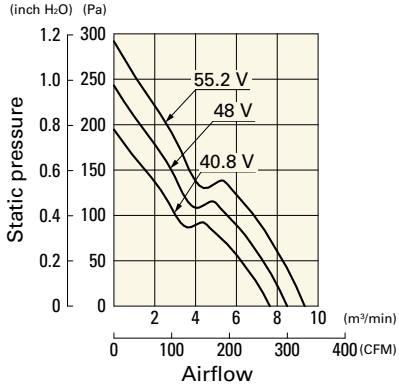

109E1748H501 With pulse sensor

Operating voltage range

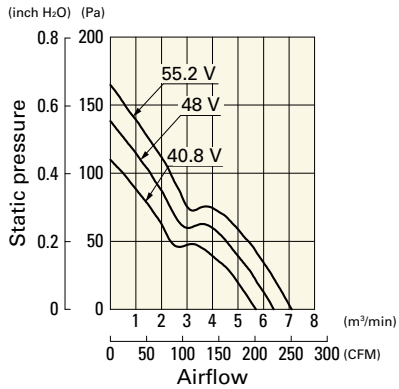

109E1748F501 With pulse sensor

Operating voltage range

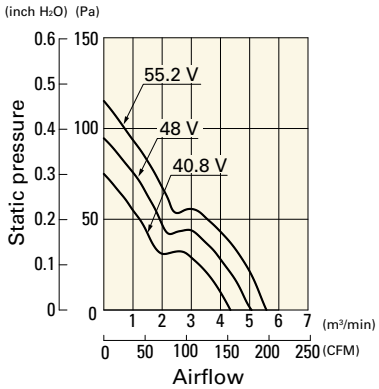

109E1748M501 With pulse sensor

Operating voltage range

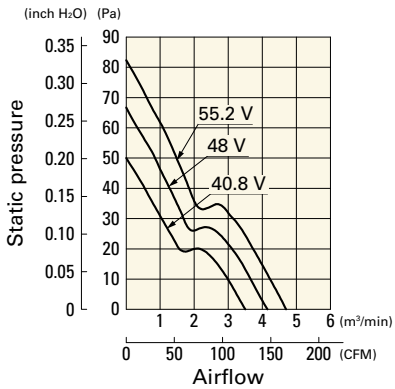

Dimensions (unit: mm)

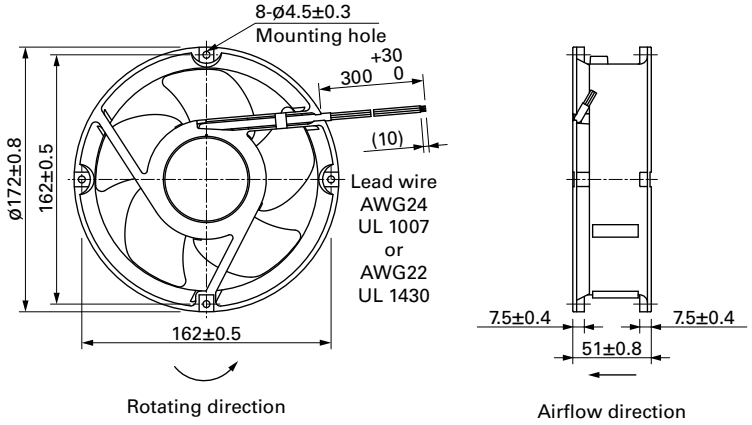

Reference Dimensions of Mounting Holes and Vent Opening (unit: mm)

Inlet side, Outlet side

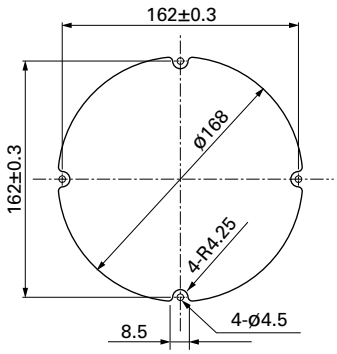

Options

Finger guards page: p. 592

Model no.: 109-319E, 109-319H, 109-1066

ø200×70 mm

San Ace 200 9GV type

General Specifications

- Material ..... Frame: Aluminum, Impeller: Plastic (Flammability: UL 94V-1)
- Expected life ..... See the table below. (L10 life: 90% survival rate for continuous operation in free air at 60˚C, rated voltage) Expected life at 40°C is for reference only.
- Motor protection function ..... Locked rotor burnout protection, Reverse polarity protection For details, please refer to p. 608.
- Dielectric strength ..... 50/60 Hz, 500 VAC, for 1 minute (between lead wire conductors and frame)
- Insulation resistance ..... 10 MΩ min. at 500 VDC (between lead wire conductors and frame)
- Sound pressure level (SPL) ..... A-weighted sound pressure level (SPL) at 1 m away from the air inlet.
- Storage temperature ..... -30 to +70˚C (Non-condensing)
- Lead wire ..... ⊕Red ⊖Black Sensor Yellow Control Brown
- Mass ..... 1800 g

Once the fan stops, wait for at least 15 seconds before restarting the fan.

Specifications

The models listed below **have a pulse sensor with PWM control.**

Model no.	Rated voltage [V]	Operating voltage range [V]	PWM duty cycle* [%]	Rated current [A]	Rated input [W]	Rated speed [min⁻¹]	Max. airflow [m³/min]	Max. airflow [CFM]	Max. static pressure [Pa]	Max. static pressure [inchH₂O]	SPL [dB (A)]	Operating temperature [˚C]	Expected life [h]
9GV2048P0G201	48	36 to 72	100	12.5	600	8000	31.5	1112	1400	5.62	81	-20 to +70	40000/60˚C (70000/40˚C)

PWM frequency is 1 kHz. Models without ratings for 0% PWM duty cycle have zero speed at 0%. When control terminal is open, speed is the same as at 100% duty cycle.

Note 1: Sensor and control options are available for selection. Refer to the table on p. 642.
Note 2: The » mark indicates Short LeadTime Service applicable models. See p. 664 for details.

Airflow - Static Pressure Characteristics / PWM Duty - Speed Characteristics Example

9GV2048P0G201 With pulse sensor with PWM control

PWM duty cycle

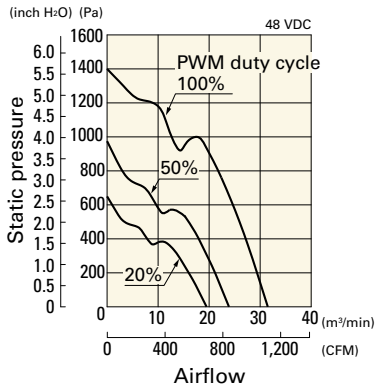

Operating voltage range

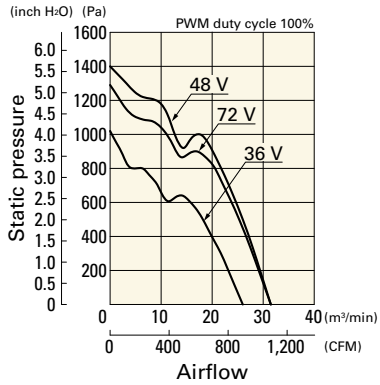

PWM duty - Speed characteristics example

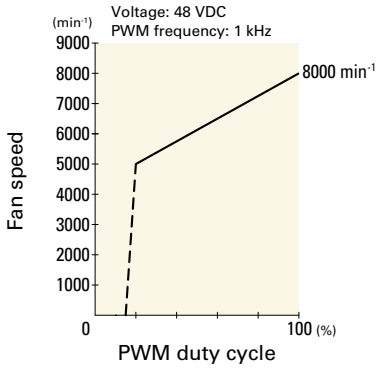

Dimensions (unit: mm)

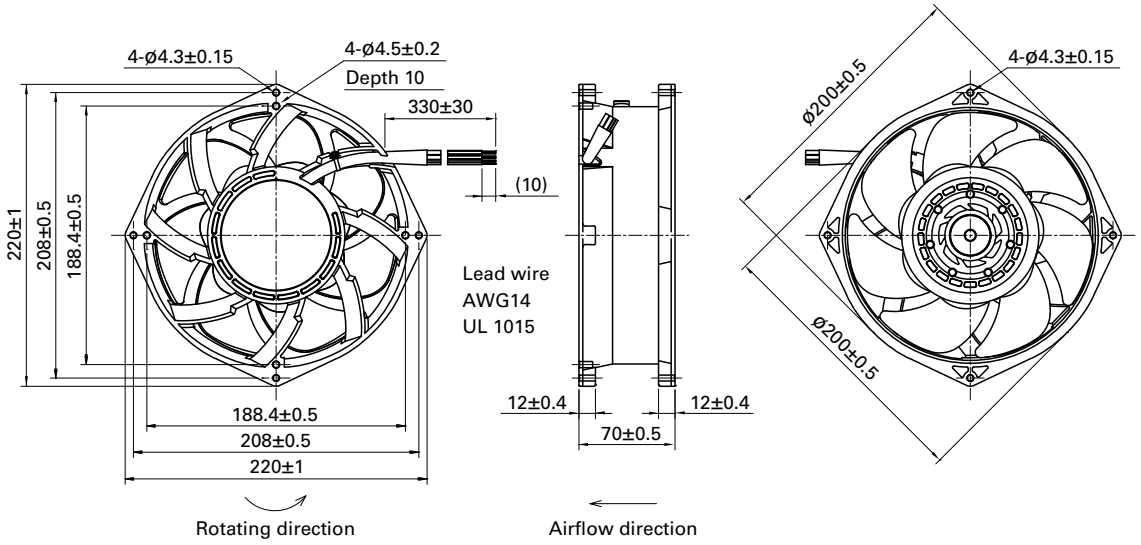

Reference Dimensions of Mounting Holes and Vent Opening (unit: mm)

Inlet side, Outlet side

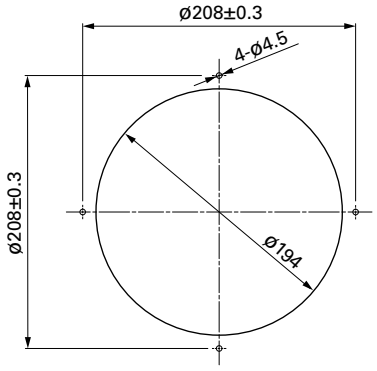

Options

Finger guards page: p. 593

Model no.: 109-1102, 109-1102H

ø200×70 mm

San Ace 200 9EC type

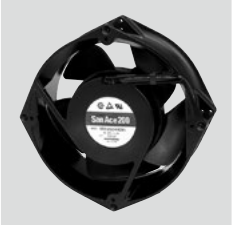

General Specifications

- Material ..... Frame: Aluminum (Black coating), Impeller: Plastic (Flammability: UL 94V-1)
- Expected life ..... See the table below. (L10 life: 90% survival rate for continuous operation in free air at 60˚C, rated voltage) Expected life at 40°C is for reference only.
- Motor protection function ..... Locked rotor burnout protection, Reverse polarity protection For details, please refer to p. 608.
- Dielectric strength ..... 50/60 Hz, 500 VAC, for 1 minute (between lead wire conductors and frame)
- Insulation resistance ..... 10 MΩ min. at 500 VDC (between lead wire conductors and frame)
- Sound pressure level (SPL) ..... A-weighted sound pressure level (SPL) at 1 m away from the air inlet.
- Storage temperature ..... -30 to +70˚C (Non-condensing)
- Lead wire ..... ⊕Red ⊖Black or Blue Sensor Yellow
- Mass ..... 1800 g

Once the fan stops, wait for at least 10 seconds before restarting the fan.

Specifications

The models listed below **have a pulse sensor.**

Model no.	Rated voltage [V]	Operating voltage range [V]	Rated current [A]	Rated input [W]	Rated speed [min⁻¹]	Max. airflow [m³/min]	Max. airflow [CFM]	Max. static pressure [Pa]	Max. static pressure [inchH₂O]	SPL [dB (A)]	Operating temperature [˚C]	Expected life [h]
9EC2024H001	24	20.4 to 26.4	2.0	48.0	3600	11.0	388	360	1.446	60	-20 to +60	40000/60˚C (70000/40˚C)
9EC2048A001	48	43.0 to 51.0	2.2	105.6	4800	14.7	519	640	2.57	68		
9EC2048H001		40.8 to 52.8	1.2	57.6	3600	11.0	388	360	1.446	60		

Note: Sensor and control options are available for selection. Refer to the table on p. 637.

Airflow - Static Pressure Characteristics

9EC2024H001 With pulse sensor

Operating voltage range

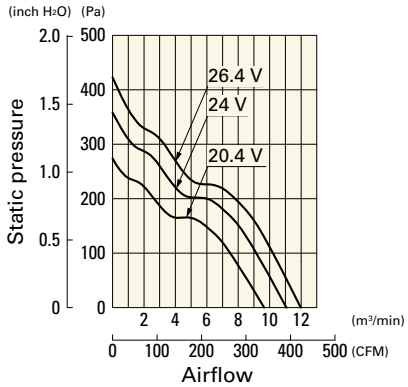

9EC2048A001 With pulse sensor

Operating voltage range

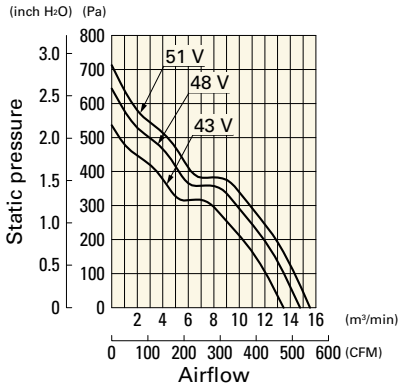

9EC2048H001 With pulse sensor

Operating voltage range

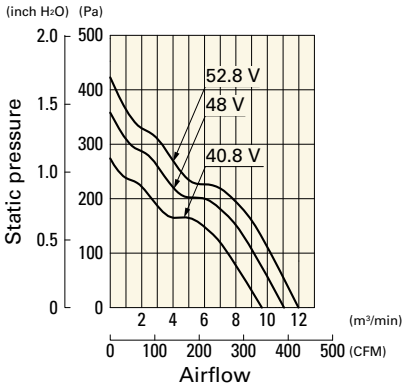

Dimensions (unit: mm)

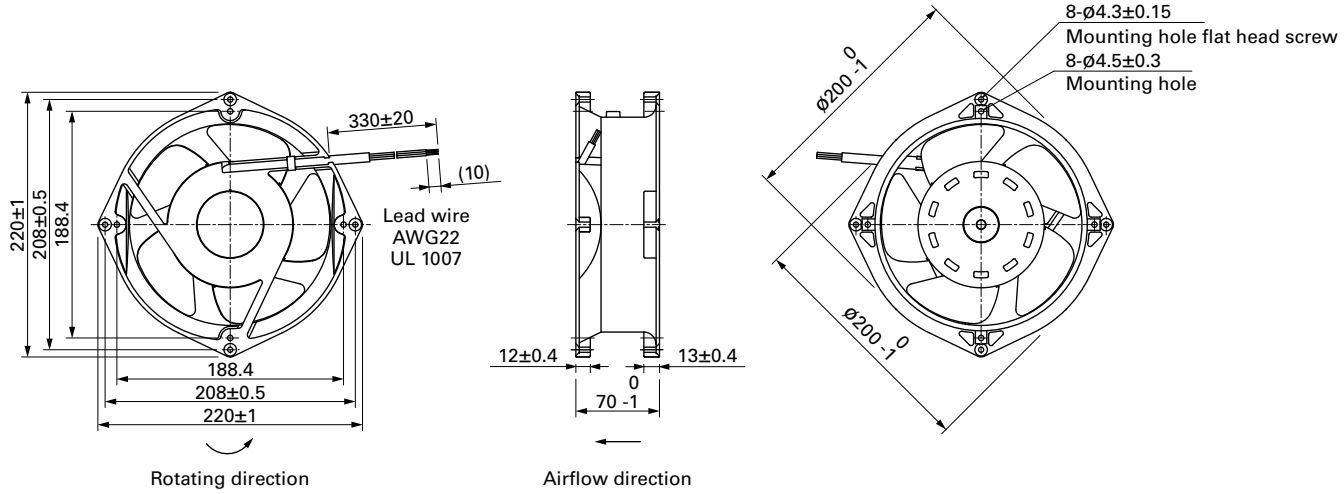

Reference Dimensions of Mounting Holes and Vent Opening (unit: mm)

Inlet side, Outlet side

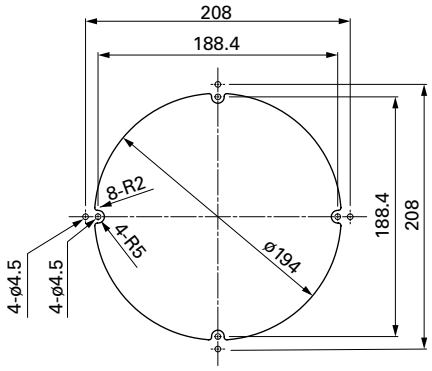

Options

Finger guards page: p. 593

Model no.: 109-720, 109-720H

Counter Rotating Fan

Counter rotating fans feature high airflow and high static pressure.
Related product: Long Life Fan pp. 380, 387

Model Numbering System

Not every combination of the following codes or characters is available. Contact us for an available combination.

9CRA	04	12	K	4	01
Type name	Frame size	Voltage	Speed code	Frame thickness	Sensor specifications

Fans with PWM control

9CRA	03	12	P	4	K	03
Type name	Frame size	Voltage	PWM control	Frame thickness	Speed code	Individual customer's spec (2 to 3 digits)

Type name	9CRA 9CRH etc.
Frame size (mm)	03 (38×38), 04 (40×40), 06 (60×60), 08 (80×80), 12 (120×120), 57 (ø172×150 (sidecut))
Voltage (V)	12, 48 (12, 48)
Speed code	G H J K S etc.
Frame thickness (mm)	0 (76), 4 (48), 5 (51, 56), 6 (56), 8 (80), 9 (102)
Sensor specifications	01, 001 With a pulse sensor; 02, 002 Without a sensor; D01, D001 With a lock sensor

How to Read Specifications (DC fan)

The following is a sample. See respective product pages for detailed information.

Model no.	Rated voltage [V]	Operating voltage range [V]	Rated current [A]	Rated input [W]	Rated speed [min⁻¹]	Max. airflow [m³/min]	Max. airflow [CFM]	Max. static pressure [Pa]	Max. static pressure [inchH₂O]	SPL [dB (A)]	Operating temperature [°C]	Expected life [h]
9GA0412G7001	12	7 to 13.8	0.17	2.04	13100	0.36	12.7	192	0.77	42	-20 to +70	40000/60°C (70000/40°C)

Rated voltage ····· This is the necessary voltage to drive the fan. E.g.) 12 VDC, 24 VDC, 48 VDC
Operating voltage range ····· The voltage range over which fan operation is guaranteed.
Rated current ····· The current when the fan is operating at rated voltage (at free air).
Rated input ····· The power value when the fan is operating at rated voltage (at free air).
Rated speed ····· The speed when the fan is operating at rated voltage (at free air).
Max. airflow ····· The airflow at 0 Pa static pressure when the fan is operating at rated voltage. (Measured using the double chamber method)
Max. static pressure ····· The static pressure at 0 m^3/min airflow when the fan is operating at rated voltage. (Measured using the double chamber method)
SPL ····· A-weighted sound pressure level (SPL) when the fan operates at the rated speed.
For the measurement method, see the Technical Materials section in the catalog.
Operating temperature ····· The temperature range over which fan operation is guaranteed (Non-condensing).
Expected life ····· Service life hours that 90% of bearings will survive without failing when continuously operated at the rated voltage and 60°C temperature. Expected life at 40°C is for reference only.
For more information, please refer to the technical material section.

Counter Rotating Fan

38×38×48 mm

San Ace 38 9CRA type

General Specifications

- Material ..... Frame: Plastic (Flammability: UL 94V-0), Impeller: Plastic (Flammability: UL 94V-1)
- Expected life ..... See the table below. (L10 life: 90% survival rate for continuous operation in free air at 60˚C, rated voltage) Expected life at 40°C is for reference only.
- Motor protection function ..... Locked rotor burnout protection, Reverse polarity protection For details, please refer to p. 608.
- Dielectric strength ..... 50/60 Hz, 500 VAC, for 1 minute (between lead wire conductors and frame)
- Insulation resistance ..... 10 MΩ min. at 500 VDC (between lead wire conductors and frame)
- Sound pressure level (SPL) ..... A-weighted sound pressure level (SPL) at 1 m away from the air inlet.
- Storage temperature ..... -30 to +70˚C (Non-condensing)
- Lead wire ..... Inlet ⊕Red ⊖Black Sensor Yellow Control Brown
  Outlet ⊕Orange ⊖Gray Sensor Purple Control White
- Mass ..... 80 g

Specifications

The models listed below **have a pulse sensor with PWM control.**

Model no.	Rated voltage [V]	Operating voltage range [V]	PWM duty cycle* [%]	Rated current [A]	Rated input [W]	Rated speed [min⁻¹] Inlet	Rated speed [min⁻¹] Outlet	Max. airflow [m³/min]	Max. airflow [CFM]	Max. static pressure [Pa]	Max. static pressure [inchH₂O]	SPL [dB (A)]	Operating temperature [˚C]	Expected life [h]
9CRA0312P4K03	12	10.8 to 13.2	100	1.5	18.0	17600	14520	0.77	27.2	700.0	2.81	64	-20 to +70	40000/60˚C (70000/40˚C)
			0	0.2	2.4	5280	4200	0.22	7.8	54.9	0.22	33		
9CRA0312P4J03			100	1.1	13.2	16000	13200	0.7	24.7	560.0	2.25	62		
			0	0.18	2.2	4800	3960	0.21	7.4	50.4	0.2	31		

PWM frequency is 25 kHz. Models without ratings for 0% PWM duty cycle have zero speed at 0%. When control terminal is open, speed is the same as at 100% duty cycle.

Note: Sensor and control options are available for selection. Refer to the table on p. 636.

Airflow - Static Pressure Characteristics / PWM Duty - Speed Characteristics Example

9CRA0312P4K03 With pulse sensor with PWM control

PWM duty cycle

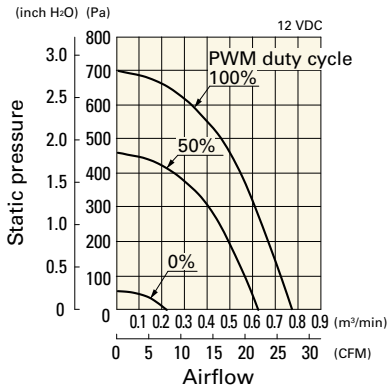

Operating voltage range

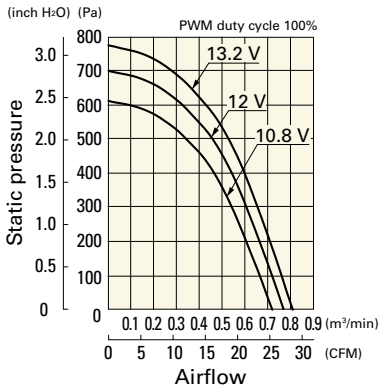

PWM duty - Speed characteristics example

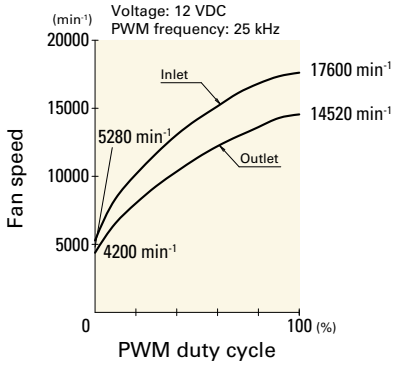

Airflow - Static Pressure Characteristics / PWM Duty - Speed Characteristics Example

9CRA0312P4J03 With pulse sensor with PWM control

PWM duty cycle

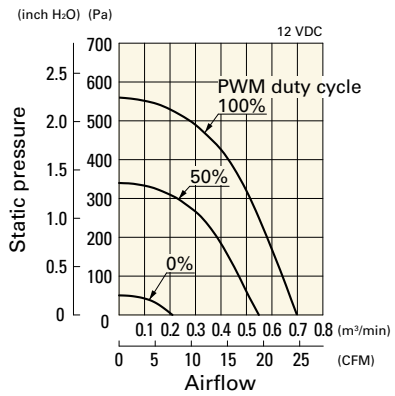

Operating voltage range

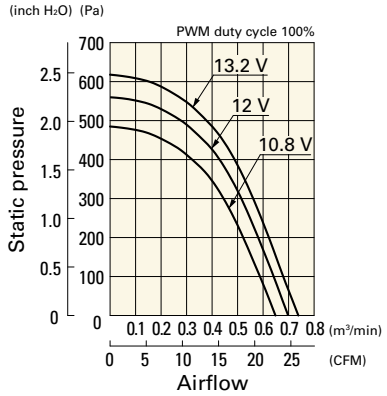

PWM duty - Speed characteristics example

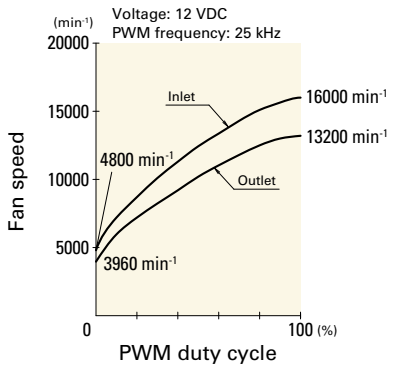

Dimensions (unit: mm)

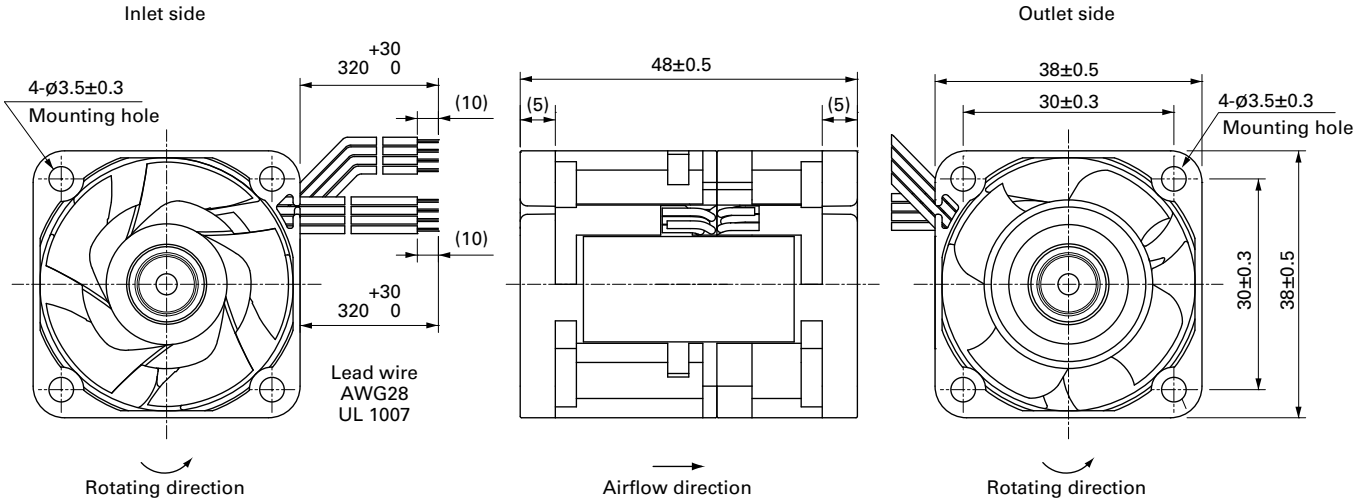

Reference Dimensions of Mounting Holes and Vent Opening (unit: mm)

Inlet side, Outlet side

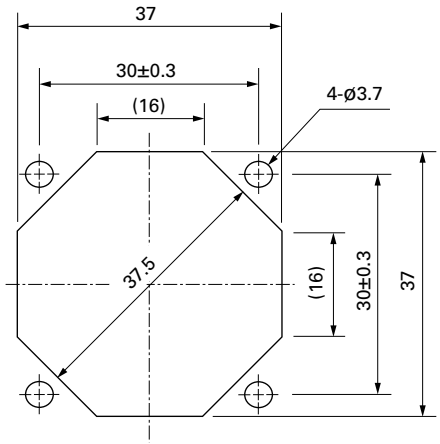

Options

Finger guards page: p. 590

Model no.: 109-1065

Counter Rotating Fan

40×40×48 mm

San Ace 40 9CRA type

General Specifications

- Material ..... Frame: Plastic (Flammability: UL 94V-0), Impeller: Plastic (Flammability: UL 94V-1)
- Expected life ..... See the table below. (L10 life: 90% survival rate for continuous operation in free air at 60˚C, rated voltage) Expected life at 40°C is for reference only.
- Motor protection function ..... Locked rotor burnout protection, Reverse polarity protection For details, please refer to p. 608.
- Dielectric strength ..... 50/60 Hz, 500 VAC, for 1 minute (between lead wire conductors and frame)
- Insulation resistance ..... 10 MΩ min. at 500 VDC (between lead wire conductors and frame)
- Sound pressure level (SPL) ..... A-weighted sound pressure level (SPL) at 1 m away from the air inlet.
- Storage temperature ..... -30 to +70˚C (Non-condensing)
- Lead wire ..... Inlet ⊕Red ⊖Black Sensor Yellow Control Brown
  Outlet ⊕Orange ⊖Gray Sensor Purple Control White
- Mass ..... 80 g

Specifications

The models listed below **have a pulse sensor with PWM control.**

Model no.	Rated voltage [V]	Operating voltage range [V]	PWM duty cycle* [%]	Rated current [A]	Rated input [W]	Rated speed [min⁻¹] Inlet	Rated speed [min⁻¹] Outlet	Max. airflow [m³/min]	Max. airflow [CFM]	Max. static pressure [Pa]	Max. static pressure [inchH₂O]	SPL [dB (A)]	Operating temperature [˚C]	Expected life [h]
9CRA0412P4K03	12	10.8 to 13.2	100	1.6	19.2	17500	11700	0.92	32.5	650.0	2.61	64	-20 to +70	40000/60˚C (70000/40˚C)
			0	0.19	2.28	5250	3510	0.276	9.75	58.5	0.235	33		
9CRA0412P4J03			100	1.2	14.4	16200	10800	0.85	30.0	560.0	2.25	62		
			0	0.15	1.8	4500	3000	0.236	8.33	43.2	0.173	28		
9CRA0412P4G03			100	1.0	12.0	14700	9800	0.77	27.2	460.0	1.85	59		
			0	0.15	1.8	4410	2940	0.231	8.16	41.4	0.166	28		

PWM frequency is 25 kHz. Models without ratings for 0% PWM duty cycle have zero speed at 0%. When control terminal is open, speed is the same as at 100% duty cycle.

Note: Sensor and control options are available for selection. Refer to the table on p. 636.

Airflow - Static Pressure Characteristics / PWM Duty - Speed Characteristics Example

9CRA0412P4K03 With pulse sensor with PWM control

PWM duty cycle

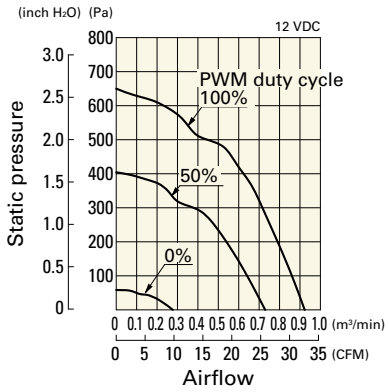

Operating voltage range

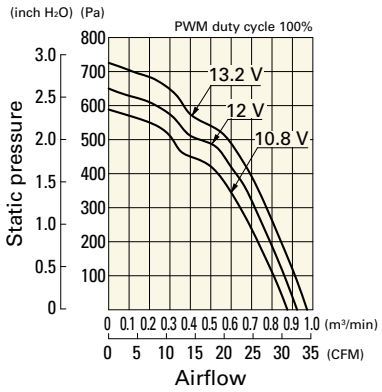

PWM duty - Speed characteristics example

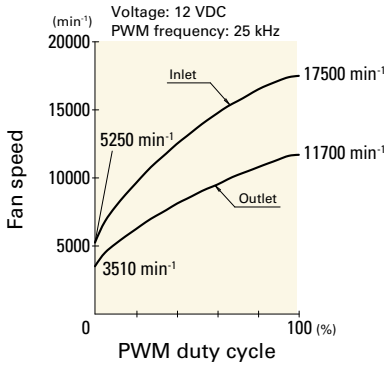

Airflow - Static Pressure Characteristics / PWM Duty - Speed Characteristics Example

9CRA0412P4J03 With pulse sensor with PWM control

PWM duty cycle

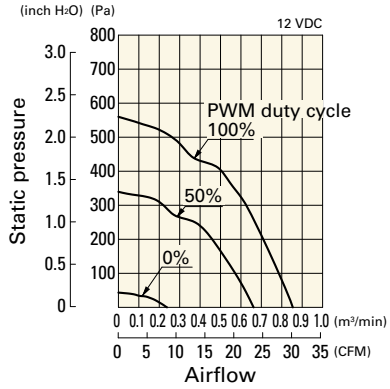

Operating voltage range

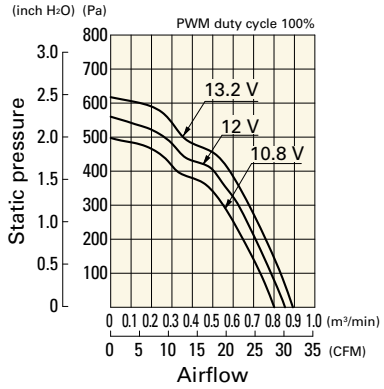

PWM duty - Speed characteristics example

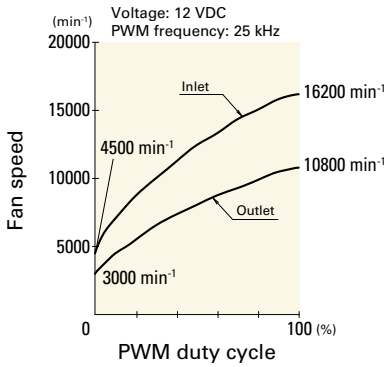

9CRA0412P4G03 With pulse sensor with PWM control

PWM duty cycle

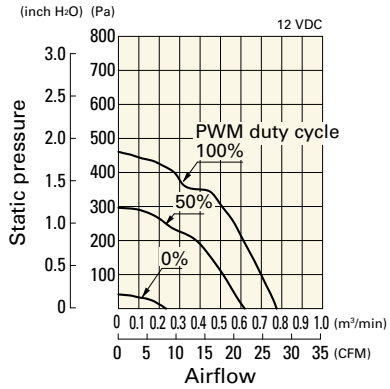

Operating voltage range

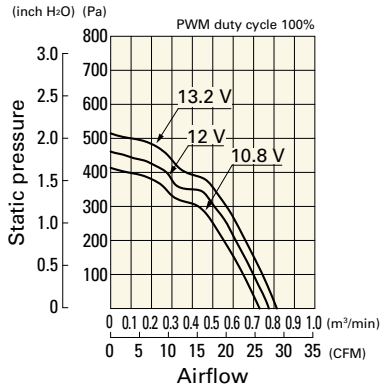

PWM duty - Speed characteristics example

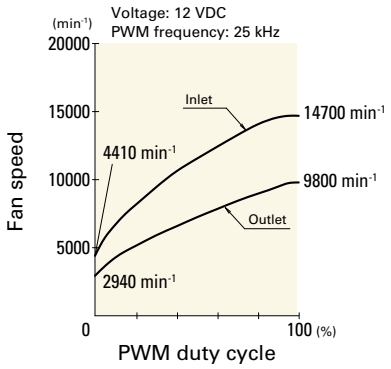

Dimensions (unit: mm)

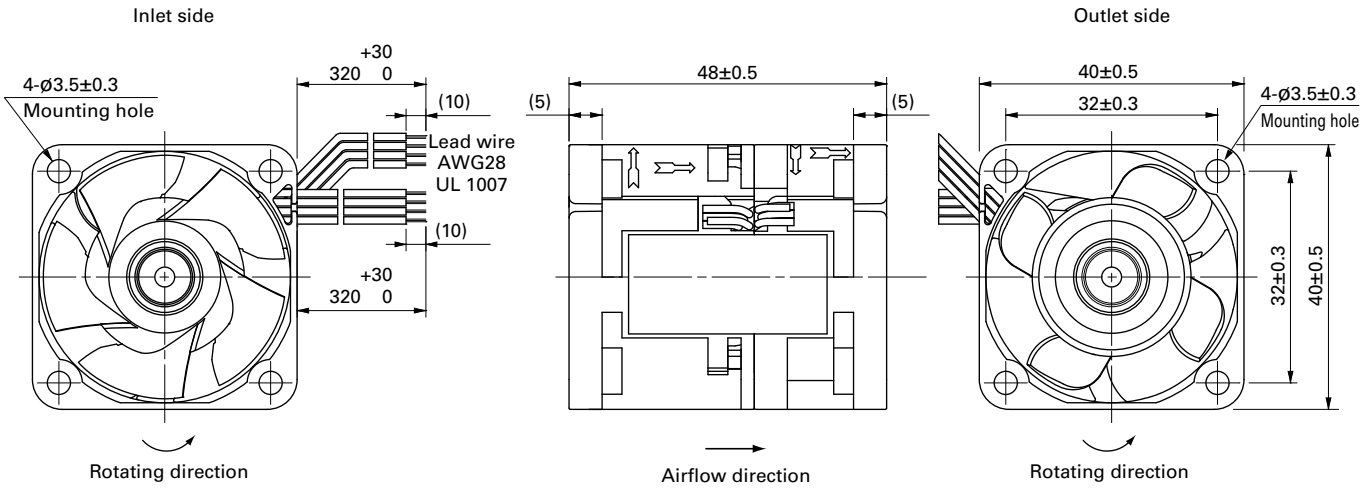

Reference Dimensions of Mounting Holes and Vent Opening (unit: mm)

Inlet side, Outlet side

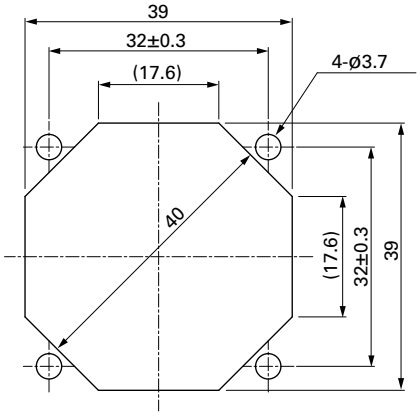

Options

Finger guards page: p. 590

Model no.: 109-059, 109-059H

Counter Rotating Fan

40×40×56 mm

San Ace 40 9CRJ type

General Specifications

- Material ..... Frame: Plastic (Flammability: UL 94V-0), Impeller: Plastic (Flammability: UL 94V-0)
- Expected life ..... See the table below. (L10 life: 90% survival rate for continuous operation in free air at 60˚C, rated voltage) Expected life at 40°C is for reference only.
- Motor protection function ..... Locked rotor burnout protection, Reverse polarity protection For details, please refer to p. 608.
- Dielectric strength ..... 50/60 Hz, 500 VAC, for 1 minute (between lead wire conductors and frame)
- Insulation resistance ..... 10 MΩ min. at 500 VDC (between lead wire conductors and frame)
- Sound pressure level (SPL) ..... A-weighted sound pressure level (SPL) at 1 m away from the air inlet.
- Storage temperature ..... -30 to +70˚C (Non-condensing)
- Lead wire ..... Inlet ⊕Red ⊖Black Sensor Yellow Control Brown
  Outlet ⊕Orange ⊖Gray Sensor Purple Control White
- Mass ..... 110 g

Specifications

The models listed below **have ribs and a pulse sensor with PWM control.**

Model no.	Rated voltage [V]	Operating voltage range [V]	PWM duty cycle* [%]	Rated current [A]	Rated input [W]	Rated speed [min⁻¹] Inlet	Rated speed [min⁻¹] Outlet	Max. airflow [m³/min]	Max. airflow [CFM]	Max. static pressure [Pa]	Max. static pressure [inchH₂O]	SPL [dB (A)]	Operating temperature [˚C]	Expected life [h]
9CRJ0412P5J001	12	10.8 to 12.6	100	3.1	37.2	36200	32000	1.06	37.4	2400	9.64	72	-20 to +70	30000/60˚C (53000/40˚C)
			20	0.1	1.2	4500	4000	0.11	3.9	40	0.16	28		

PWM frequency is 25 kHz. Models without ratings for 0% PWM duty cycle have zero speed at 0%. When control terminal is open, speed is the same as at 100% duty cycle.

Note: The » mark indicates Short Lead Time Service applicable models. See p. 664 for details.

Airflow - Static Pressure Characteristics / PWM Duty - Speed Characteristics Example

9CRJ0412P5J001 With pulse sensor with PWM control

PWM duty cycle

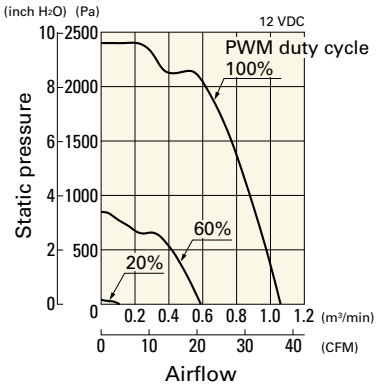

Operating voltage range

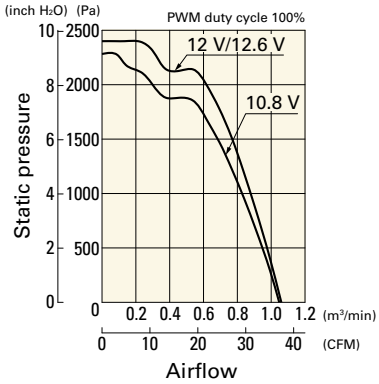

PWM duty - Speed characteristics example

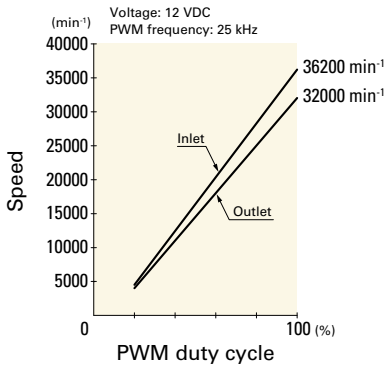

Dimensions (unit: mm)

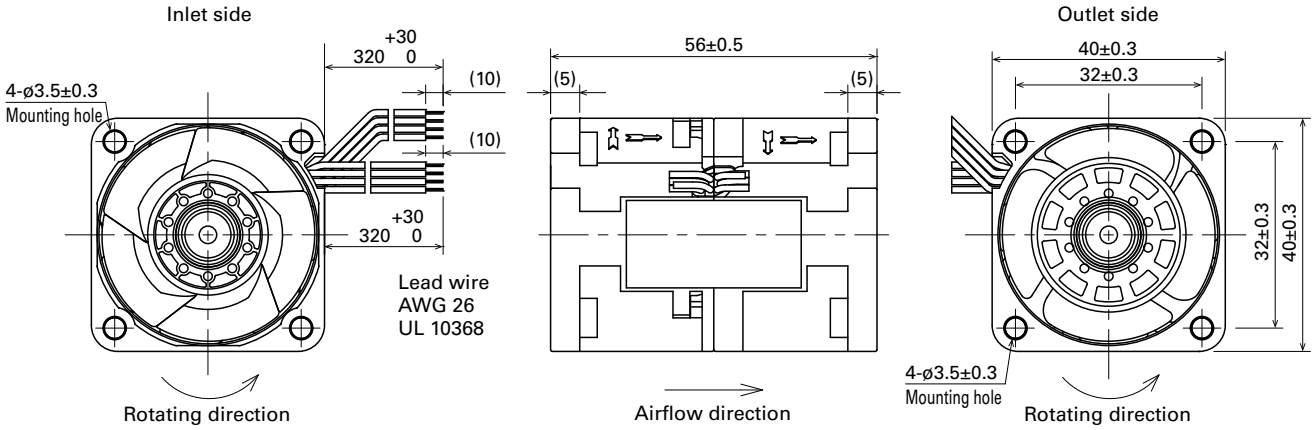

Reference Dimensions of Mounting Holes and Vent Opening (unit: mm)

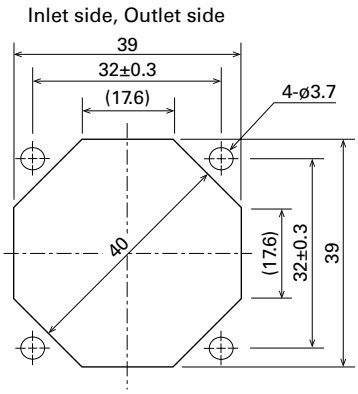

Options

Finger guards	page: p. 590

Model no.: 109-059, 109-059H

40×40×56 mm

San Ace 40 9CRH type

General Specifications

- Material ..... Frame: Plastic (Flammability: UL 94V-0), Impeller: Plastic (Flammability: UL 94V-0)
- Expected life ..... See the table below. (L10 life: 90% survival rate for continuous operation in free air at 60˚C, rated voltage) Expected life at 40°C is for reference only.
- Motor protection function ..... Locked rotor burnout protection, Reverse polarity protection For details, please refer to p. 608.
- Dielectric strength ..... 50/60 Hz, 500 VAC, for 1 minute (between lead wire conductors and frame)
- Insulation resistance ..... 10 MΩ min. at 500 VDC (between lead wire conductors and frame)
- Sound pressure level (SPL) ..... A-weighted sound pressure level (SPL) at 1 m away from the air inlet.
- Storage temperature ..... -30 to +70˚C (Non-condensing)
- Lead wire ..... Inlet ⊕Red ⊖Black Sensor Yellow Control Brown
  Outlet ⊕Orange ⊖Gray Sensor Purple Control White
- Mass ..... 110 g

Specifications

The models listed below **have a pulse sensor with PWM control.**

Model no.	Rated voltage [V]	Operating voltage range [V]	PWM duty cycle* [%]	Rated current [A]	Rated input [W]	Rated speed [min⁻¹] Inlet	Rated speed [min⁻¹] Outlet	Max. airflow [m³/min]	Max. airflow [CFM]	Max. static pressure [Pa]	Max. static pressure [inchH₂O]	SPL [dB (A)]	Operating temperature [˚C]	Expected life [h]
9CRH0412P5J001	12	10.8 to 12.6	100	2.52	30.24	29500	25500	0.93	32.9	1700	6.83	70	-20 to +70	30000/60˚C (53000/40˚C)
			20	0.06	0.72	3000	2600	0.08	2.8	17	0.07	20		

PWM frequency is 25 kHz. Models without ratings for 0% PWM duty cycle have zero speed at 0%. When control terminal is open, speed is the same as at 100% duty cycle.

Note: The » mark indicates Short Lead Time Service applicable models. See p. 664 for details.

Airflow - Static Pressure Characteristics / PWM Duty - Speed Characteristics Example

9CRH0412P5J001 With pulse sensor with PWM control

PWM duty cycle

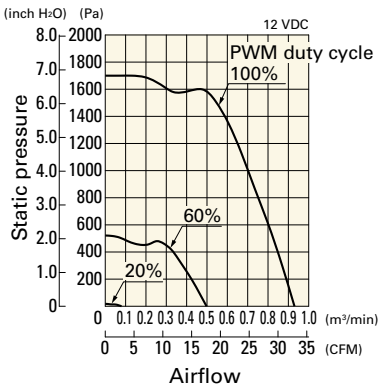

Operating voltage range

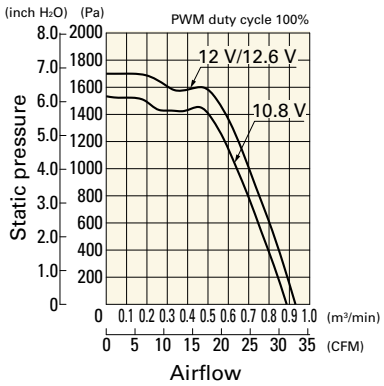

PWM duty - Speed characteristics example

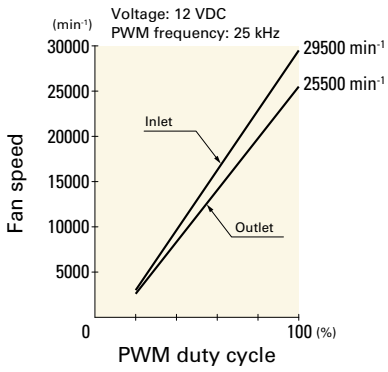

Dimensions (unit: mm)

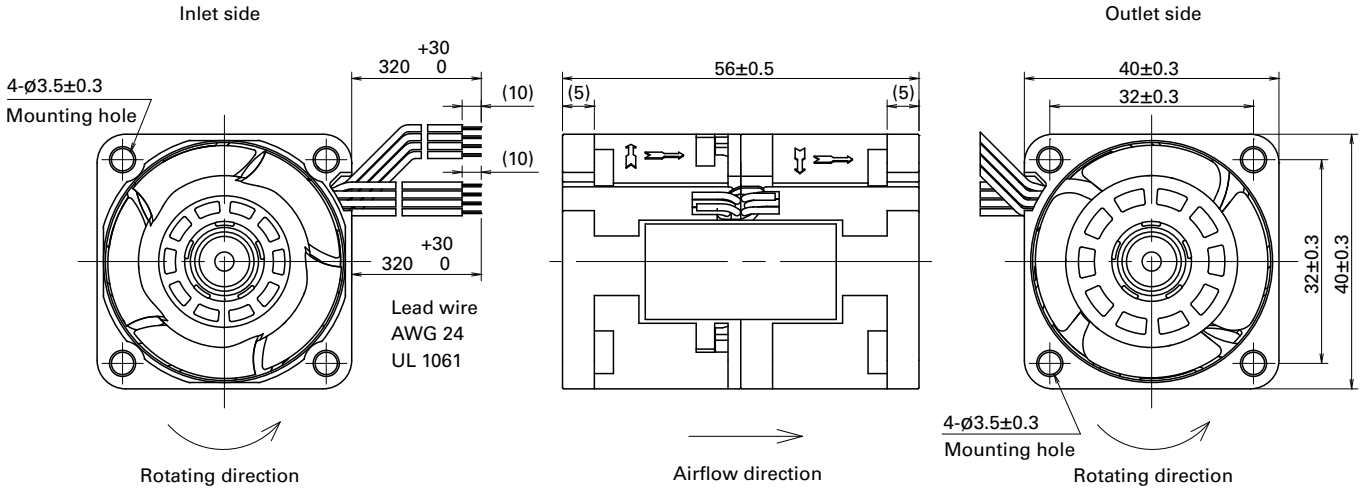

Reference Dimensions of Mounting Holes and Vent Opening (unit: mm)

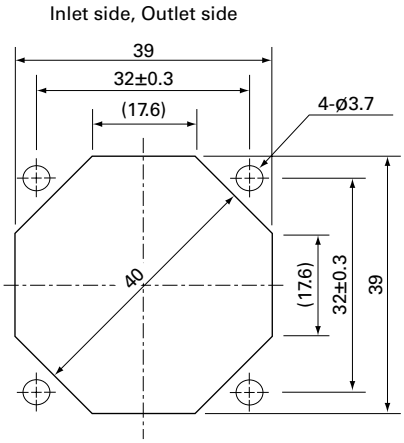

Options

Finger guards page: p. 590

Model no.: 109-059, 109-059H

40×40×56 mm

San Ace 40 9CRV type

General Specifications

- Material ..... Frame: Plastic (Flammability: UL 94V-0), Impeller: Plastic (Flammability: UL 94V-0)
- Expected life ..... See the table below. (L10 life: 90% survival rate for continuous operation in free air at 60˚C, rated voltage) Expected life at 40°C is for reference only.
- Motor protection function ..... Locked rotor burnout protection, Reverse polarity protection For details, please refer to p. 608.
- Dielectric strength ..... 50/60 Hz, 500 VAC, for 1 minute (between lead wire conductors and frame)
- Insulation resistance ..... 10 MΩ min. at 500 VDC (between lead wire conductors and frame)
- Sound pressure level (SPL) ..... A-weighted sound pressure level (SPL) at 1 m away from the air inlet.
- Storage temperature ..... -30 to +70˚C (Non-condensing)
- Lead wire ..... Inlet ⊕Red ⊖Black Sensor Yellow Control Brown
  Outlet ⊕Orange ⊖Gray Sensor Purple Control White
- Mass ..... 100 g

Specifications

The models listed below **have a pulse sensor with PWM control.**

Model no.	Rated voltage [V]	Operating voltage range [V]	PWM duty cycle* [%]	Rated current [A]	Rated input [W]	Rated speed [min⁻¹] Inlet	Rated speed [min⁻¹] Outlet	Max. airflow [m³/min]	Max. airflow [CFM]	Max. static pressure [Pa]	Max. static pressure [inchH₂O]	SPL [dB (A)]	Operating temperature [˚C]	Expected life [h]
9CRV0412P5J201	12	10.8 to 13.2	100	1.8	21.6	22500	20000	0.9	31.8	1050	4.22	68	-20 to +70	40000/60˚C (70000/40˚C)
			0	0.11	1.32	3800	3500	0.14	4.9	30	0.12	26		
9CRV0412P5G201			100	1.1	13.2	19000	16900	0.76	26.8	748	3.0	62		
			0	0.11	1.32	3800	3500	0.14	4.9	30	0.12	26		
9CRV0412P5S201			100	0.8	9.6	17000	15100	0.68	24	590	2.37	59		
			0	0.11	1.32	3800	3500	0.14	4.9	30	0.12	26		
9CRV0412P5H201			100	0.55	6.6	15000	13300	0.6	21.2	451	1.81	56		
			0	0.11	1.32	3800	3500	0.14	4.9	30	0.12	26		

PWM frequency is 25 kHz. Models without ratings for 0% PWM duty cycle have zero speed at 0%. When control terminal is open, speed is the same as at 100% duty cycle.

Note: The » mark indicates Short Lead Time Service applicable models. See p. 664 for details.

Airflow - Static Pressure Characteristics / PWM Duty - Speed Characteristics Example

9CRV0412P5J201 With pulse sensor with PWM control

PWM duty cycle

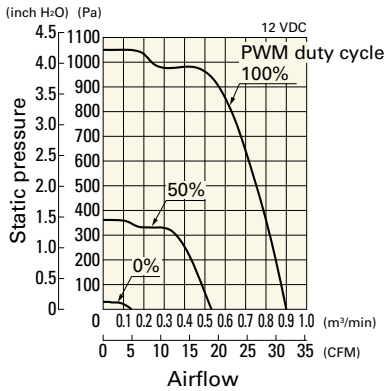

Operating voltage range

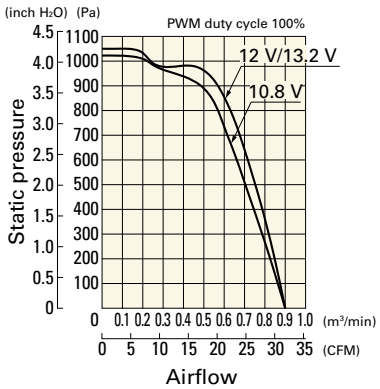

PWM duty - Speed characteristics example

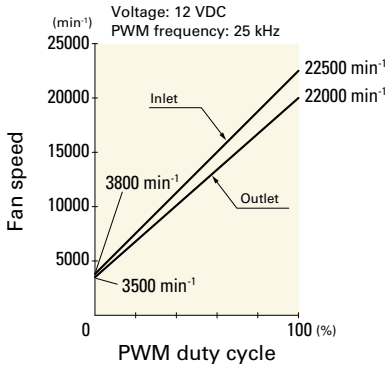

Airflow - Static Pressure Characteristics / PWM Duty - Speed Characteristics Example

9CRV0412P5G201 With pulse sensor with PWM control

PWM duty cycle

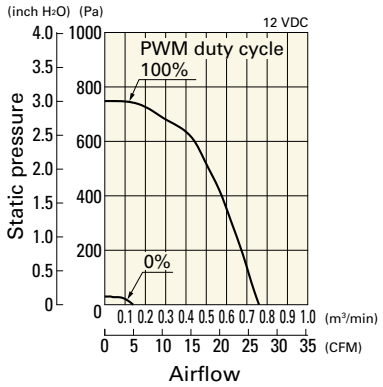

Operating voltage range

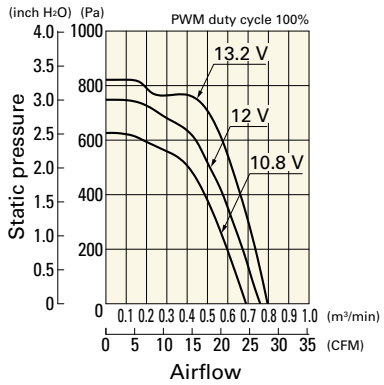

PWM duty - Speed characteristics example

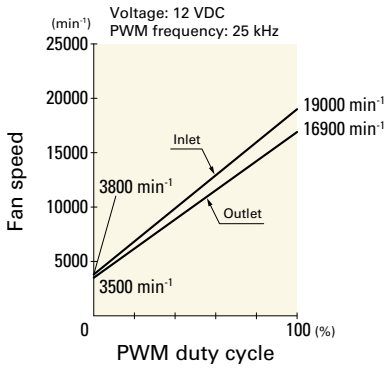

9CRV0412P5S201 With pulse sensor with PWM control

PWM duty cycle

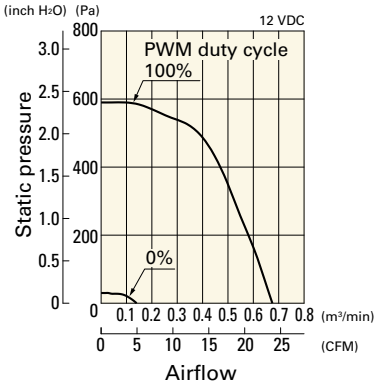

Operating voltage range

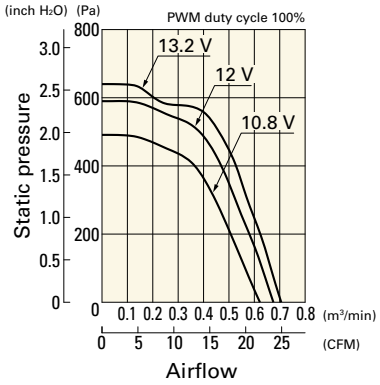

PWM duty - Speed characteristics example

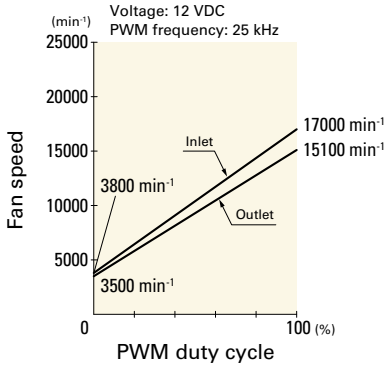

9CRV0412P5H201 With pulse sensor with PWM control

PWM duty cycle

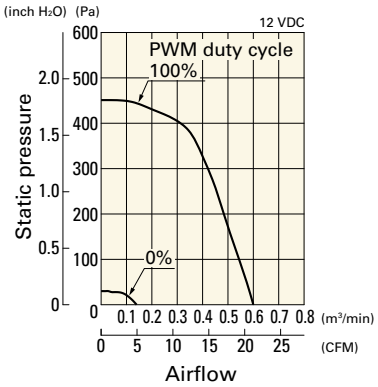

Operating voltage range

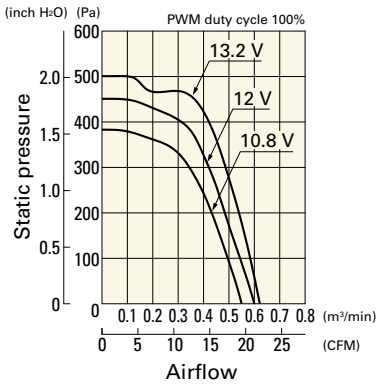

PWM duty - Speed characteristics example

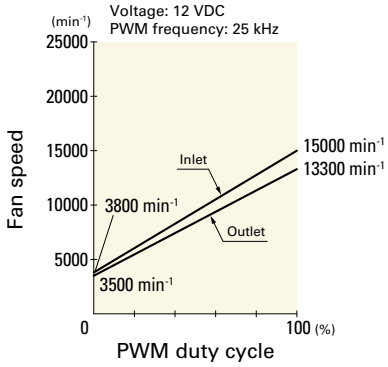

Dimensions (unit: mm)

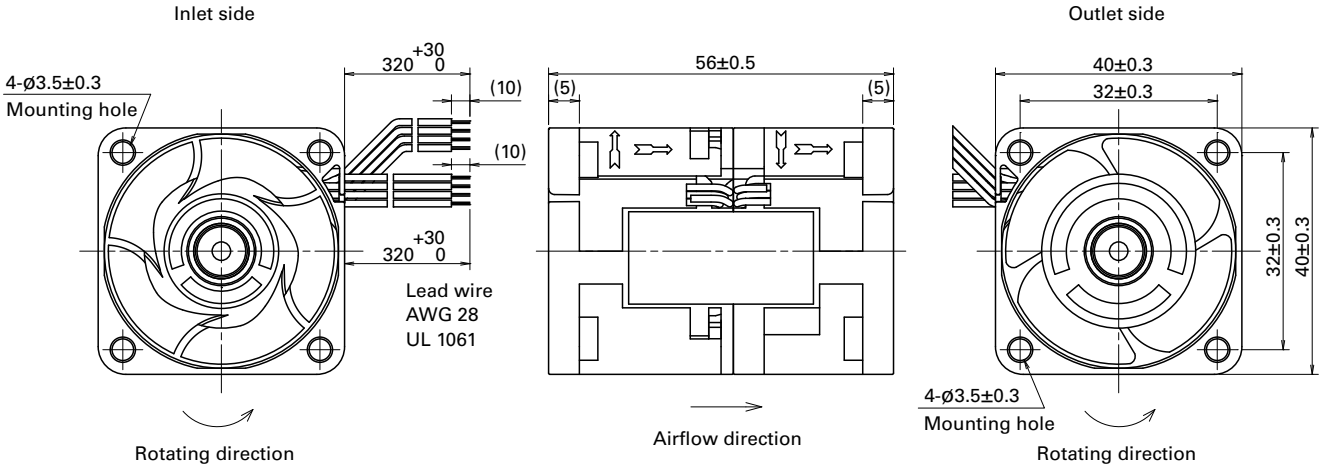

Reference Dimensions of Mounting Holes and Vent Opening (unit: mm)

Inlet side, Outlet side

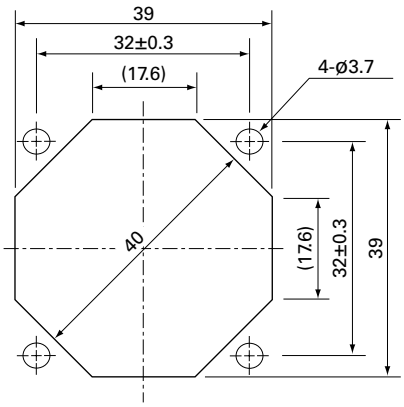

Options

Finger guards page: p. 590

Model no.: 109-059, 109-059H

Counter Rotating Fan

40×40×56 mm

San Ace 40 9CRE type Low Vibration Fan

General Specifications

- Material ..... Frame: Aluminum, Impeller: Plastic (Flammability: UL 94V-0)
- Expected life ..... See the table below. (L10 life: 90% survival rate for continuous operation in free air at 60˚C, rated voltage) Expected life at 40°C is for reference only.
- Motor protection function ..... Locked rotor burnout protection, Reverse polarity protection For details, please refer to p. 608.
- Dielectric strength ..... 50/60 Hz, 500 VAC, for 1 minute (between lead wire conductors and frame)
- Insulation resistance ..... 10 MΩ min. at 500 VDC (between lead wire conductors and frame)
- Sound pressure level (SPL) ..... A-weighted sound pressure level (SPL) at 1 m away from the air inlet.
- Storage temperature ..... -30 to +70˚C (Non-condensing)
- Lead wire ..... Inlet ⊕Red ⊖Black Sensor Yellow Control Brown
  Outlet ⊕Orange ⊖Gray Sensor Purple Control White
- Mass ..... 110 g

Specifications

The models listed below **have a pulse sensor with PWM control.**

Model no.	Rated voltage [V]	Operating voltage range [V]	PWM duty cycle* [%]	Rated current [A]	Rated input [W]	Rated speed [min⁻¹] Inlet	Rated speed [min⁻¹] Outlet	Max. airflow [m³/min]	Max. airflow [CFM]	Max. static pressure [Pa]	Max. static pressure [inchH₂O]	SPL [dB (A)]	Operating temperature [˚C]	Expected life [h]
9CRE0412P5J03	12	10.8 to 13.2	100	1.4	16.8	15800	12200	0.9	31.8	570.0	2.29	62	-20 to +70	40000/60˚C (70000/40˚C)
			0	0.1	1.2	2850	2250	0.12	4.2	13.7	0.055	20.5		

PWM frequency is 25 kHz. Models without ratings for 0% PWM duty cycle have zero speed at 0%. When control terminal is open, speed is the same as at 100% duty cycle.

Note: Sensor and control options are available for selection. Refer to the table on p. 636.

Airflow - Static Pressure Characteristics / PWM Duty - Speed Characteristics Example

9CRE0412P5J03 With pulse sensor with PWM control

PWM duty cycle

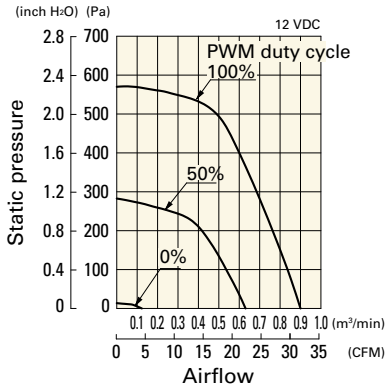

Operating voltage range

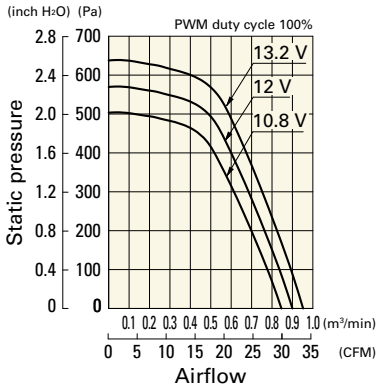

PWM duty - Speed characteristics example

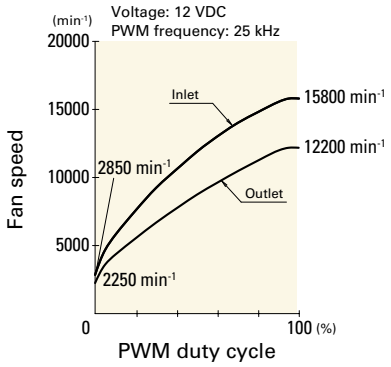

Dimensions (unit: mm)

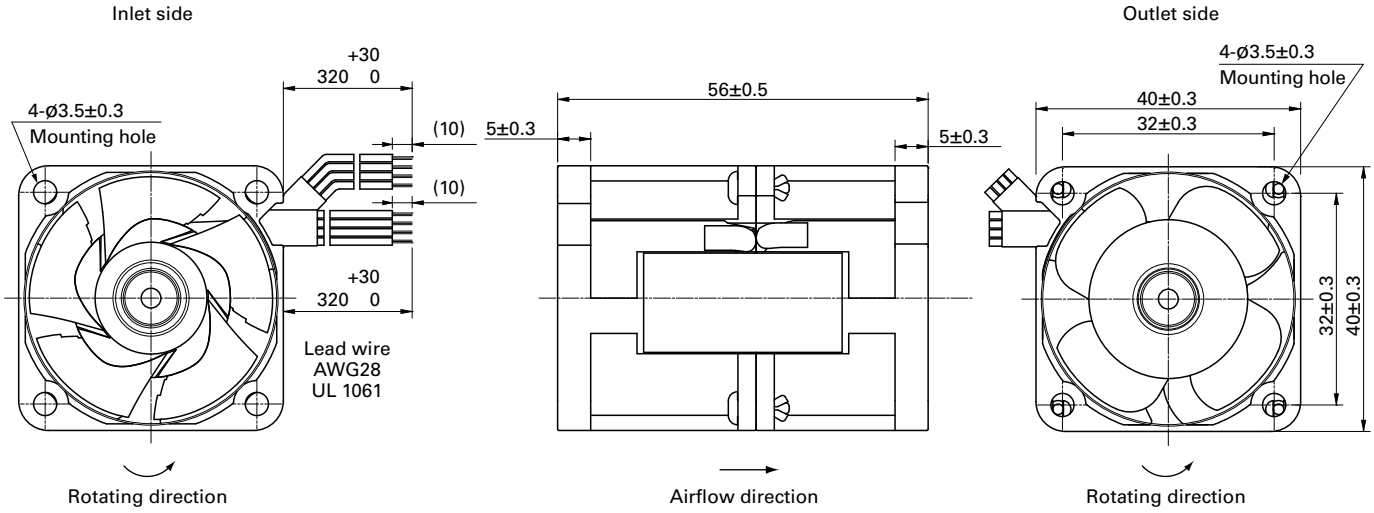

Reference Dimensions of Mounting Holes and Vent Opening (unit: mm)

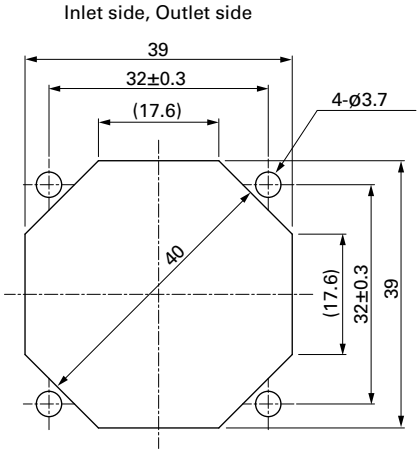

Options

Finger guards page: p. 590

Model no.: 109-059, 109-059H

Counter Rotating Fan

60×60×51 mm

San Ace 60 9CR type

General Specifications

- Material ..... Frame: Plastic (Flammability: UL 94V-0), Impeller: Plastic (Flammability: UL 94V-1)
- Expected life ..... See the table below. (L10 life: 90% survival rate for continuous operation in free air at 60˚C, rated voltage) Expected life at 40°C is for reference only.
- Motor protection function ..... Locked rotor burnout protection, Reverse polarity protection For details, please refer to p. 608.
- Dielectric strength ..... 50/60 Hz, 500 VAC, for 1 minute (between lead wire conductors and frame)
- Insulation resistance ..... 10 MΩ min. at 500 VDC (between lead wire conductors and frame)
- Sound pressure level (SPL) ..... A-weighted sound pressure level (SPL) at 1 m away from the air inlet.
- Storage temperature ..... -30 to +70˚C (Non-condensing)
- Lead wire ..... Inlet ⊕Red ⊖Black Sensor Yellow Control Brown
  Outlet ⊕Orange ⊖Gray Sensor Purple Control White
- Mass ..... 180 g

Specifications

The models listed below **have a pulse sensor with PWM control.**

Model no.	Rated voltage [V]	Operating voltage range [V]	PWM duty cycle* [%]	Rated current [A]	Rated input [W]	Rated speed [min⁻¹] Inlet	Rated speed [min⁻¹] Outlet	Max. airflow [m³/min]	Max. airflow [CFM]	Max. static pressure [Pa]	Max. static pressure [inchH₂O]	SPL [dB (A)]	Operating temperature [˚C]	Expected life [h]
9CR0612P5G03	12	10.8 to 13.2	100	2.7	32.4	11500	9000	2.03	71.7	600	2.41	68	-20 to +70	40000/60˚C (70000/40˚C)
			0	0.22	2.64	3000	2300	0.48	16.9	40	0.16	34		
9CR0612P5H03			100	2.0	24.0	10500	8200	1.85	65.4	500	2.01	65		
			0	0.22	2.64	3000	2300	0.48	16.9	40	0.16	34		

PWM frequency is 25 kHz. Models without ratings for 0% PWM duty cycle have zero speed at 0%. When control terminal is open, speed is the same as at 100% duty cycle.

Note: Sensor and control options are available for selection. Refer to the table on p. 636.

Airflow - Static Pressure Characteristics / PWM Duty - Speed Characteristics Example

9CR0612P5G03 With pulse sensor with PWM control

PWM duty cycle

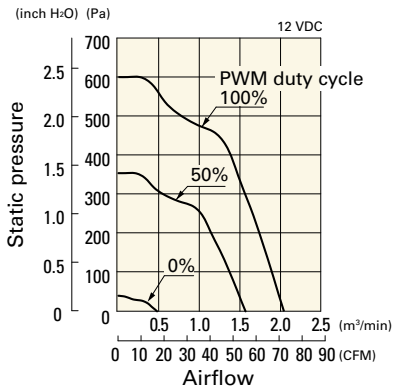

Operating voltage range

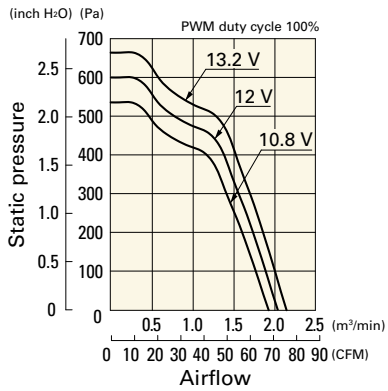

PWM duty - Speed characteristics example

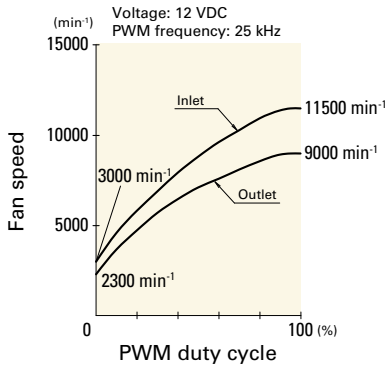

Airflow - Static Pressure Characteristics / PWM Duty - Speed Characteristics Example

9CR0612P5H03 With pulse sensor with PWM control

PWM duty cycle

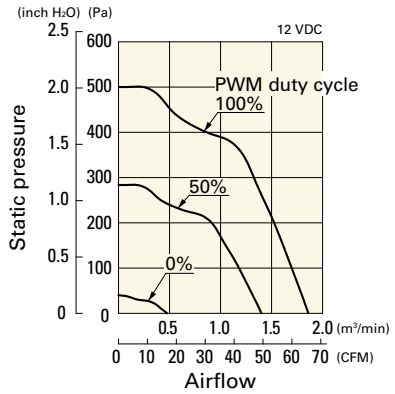

Operating voltage range

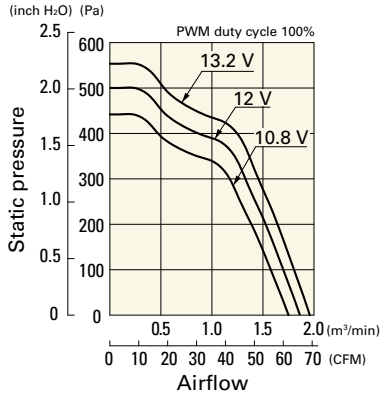

PWM duty - Speed characteristics example

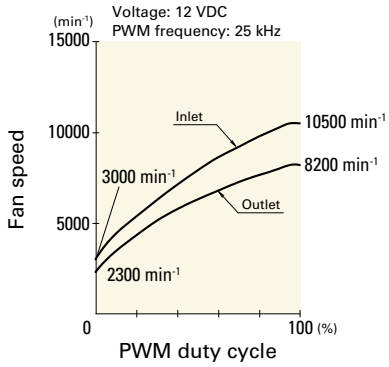

Dimensions (unit: mm)

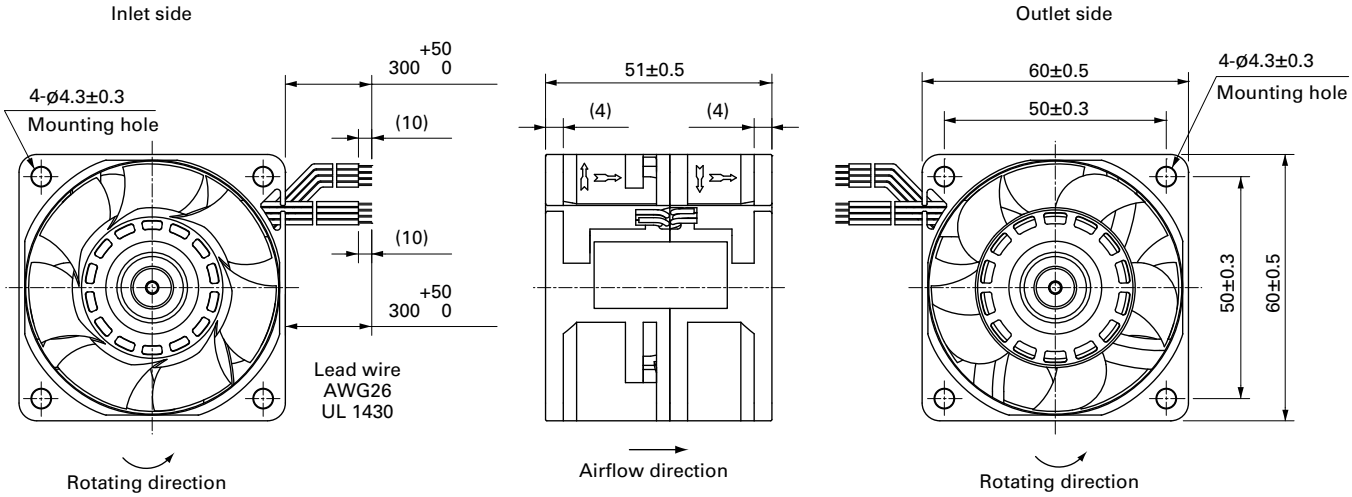

Reference Dimensions of Mounting Holes and Vent Opening (unit: mm)

Inlet side, Outlet side

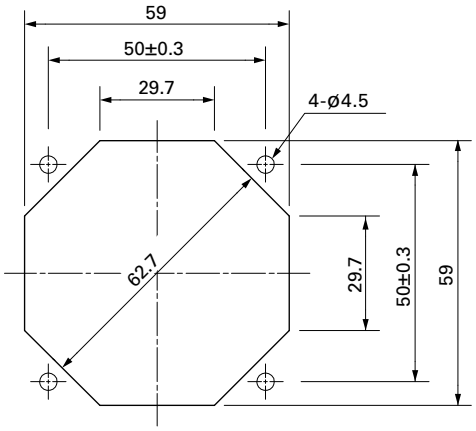

Options

Finger guards page: p. 590

Model no.: 109-139E, 109-139H

Resin finger guards page: p. 597

Model no.: 109-1003G

Resin filter kits page: p. 598

Model no.: 109-1003F13 (13PPI), 109-1003F20 (20PPI),
109-1003F30 (30PPI), 109-1003F40 (40PPI)

Counter Rotating Fan

60×60×56 mm

San Ace 60 9CRA type

General Specifications

- Material ..... Frame: Plastic (Flammability: UL 94V-0), Impeller: Plastic (Flammability: UL 94V-0)
- Expected life ..... See the table below. (L10 life: 90% survival rate for continuous operation in free air at 60˚C, rated voltage) Expected life at 40°C is for reference only.
- Motor protection function ..... Locked rotor burnout protection, Reverse polarity protection For details, please refer to p. 608.
- Dielectric strength ..... 50/60 Hz, 500 VAC, for 1 minute (between lead wire conductors and frame)
- Insulation resistance ..... 10 MΩ min. at 500 VDC (between lead wire conductors and frame)
- Sound pressure level (SPL) ..... A-weighted sound pressure level (SPL) at 1 m away from the air inlet.
- Storage temperature ..... -30 to +70˚C (Non-condensing)
- Lead wire ..... Inlet ⊕Red ⊖Black Sensor Yellow Control Brown
  Outlet ⊕Orange ⊖Gray Sensor Purple Control White
- Mass ..... 200 g

Specifications

The models listed below **have a pulse sensor with PWM control.**

Model no.	Rated voltage [V]	Operating voltage range [V]	PWM duty cycle* [%]	Rated current [A]	Rated input [W]	Rated speed [min⁻¹] Inlet	Rated speed [min⁻¹] Outlet	Max. airflow [m³/min]	Max. airflow [CFM]	Max. static pressure [Pa]	Max. static pressure [inchH₂O]	SPL [dB (A)]	Operating temperature [˚C]	Expected life [h]
9CRA0612P6K001	12	10.8 to 13.2	100	3.1	37.2	18300	15800	2.28	80.5	1130	4.54	73	-20 to +70	30000/60˚C (53000/40˚C)
			0	0.17	2.0	3800	3300	0.47	16.6	49	0.2	35		
9CRA0612P6J001			100	2.3	27.6	16800	14500	2.1	74.2	950	3.82	70		40000/60˚C (70000/40˚C)
			0	0.15	1.8	3800	3300	0.47	16.6	49	0.2	35		
9CRA0612P6G001			100	1.3	15.6	13500	11400	1.65	58.3	620	2.49	65		
			0	0.1	1.2	3000	2500	0.36	12.7	31	0.12	29		

PWM frequency is 25 kHz. Models without ratings for 0% PWM duty cycle have zero speed at 0%. When control terminal is open, speed is the same as at 100% duty cycle.

Note: The » mark indicates Short Lead Time Service applicable models. See p. 664 for details.

Airflow - Static Pressure Characteristics / PWM Duty - Speed Characteristics Example

9CRA0612P6K001 With pulse sensor with PWM control

PWM duty cycle

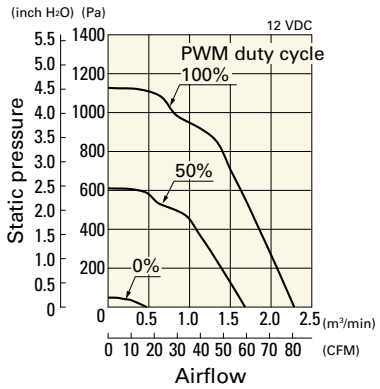

Operating voltage range

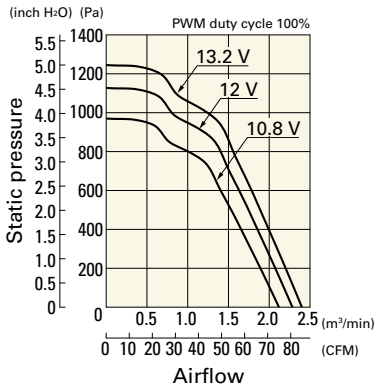

PWM duty - Speed characteristics example

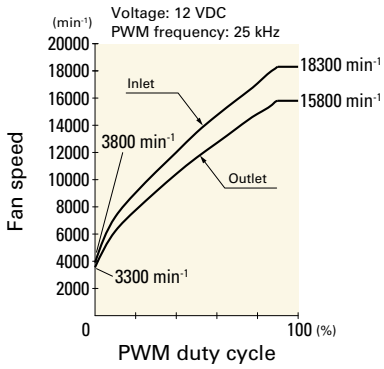

Airflow - Static Pressure Characteristics / PWM Duty - Speed Characteristics Example

9CRA0612P6J001 With pulse sensor with PWM control

PWM duty cycle

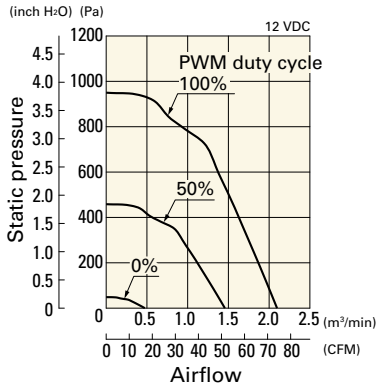

Operating voltage range

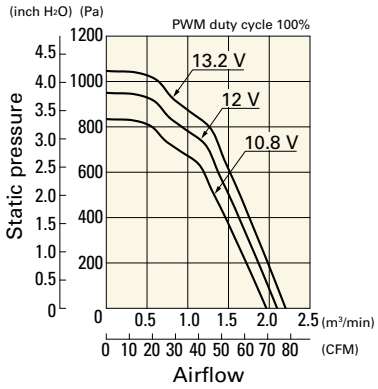

PWM duty - Speed characteristics example

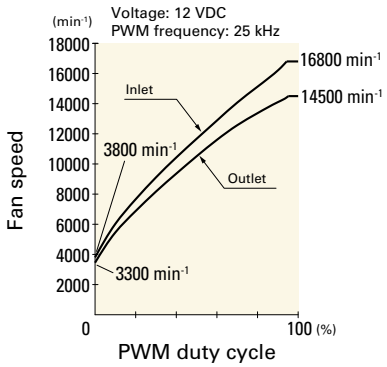

9CRA0612P6G001 With pulse sensor with PWM control

PWM duty cycle

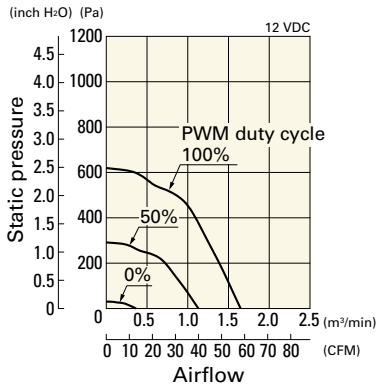

Operating voltage range

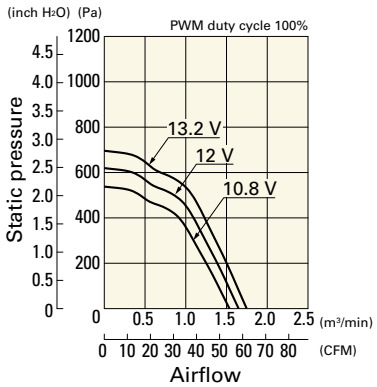

PWM duty - Speed characteristics example

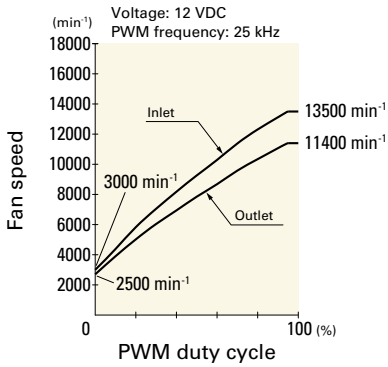

Dimensions (unit: mm)

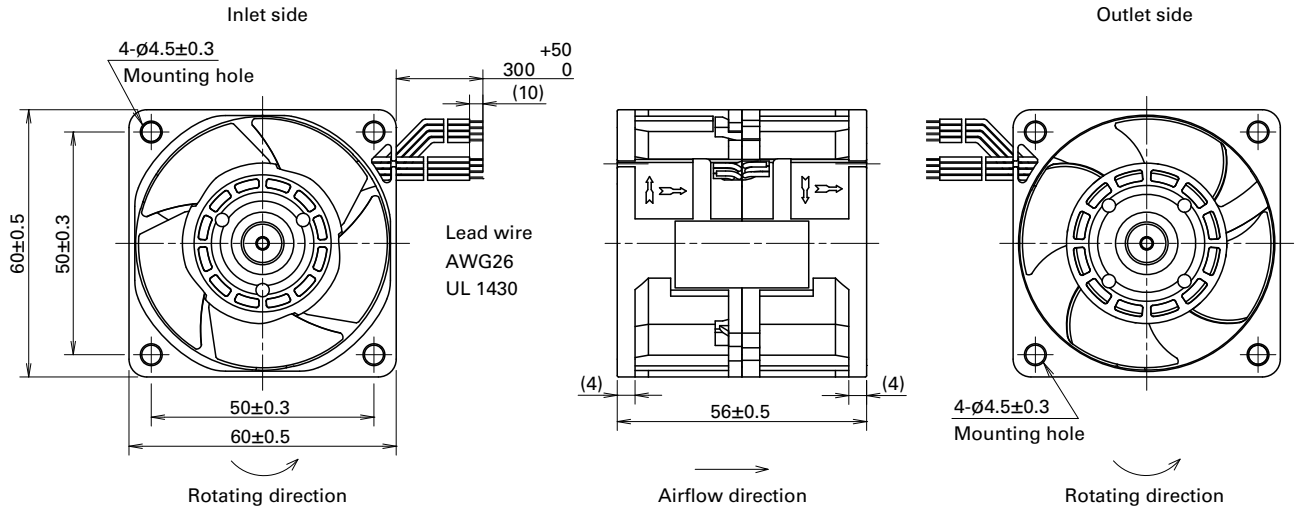

Reference Dimensions of Mounting Holes and Vent Opening (unit: mm)

Inlet side, Outlet side

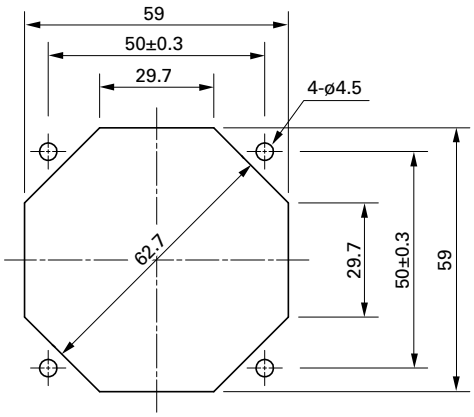

Options

Finger guards page: p. 590

Model no.: 109-139E, 109-139H

Resin filter kits page: p. 598

Model no.: 109-1003F13 (13PPI), 109-1003F20 (20PPI),
109-1003F30 (30PPI), 109-1003F40 (40PPI)

Resin finger guards page: p. 597

Model no.: 109-1003G

60×60×76 mm

San Ace 60 9CRE type Low Vibration Fan

General Specifications

- Material ..... Frame: Aluminum, Impeller: Plastic (Flammability: UL 94V-1)
- Expected life ..... See the table below. (L10 life: 90% survival rate for continuous operation in free air at 60˚C, rated voltage) Expected life at 40°C is for reference only.
- Motor protection function ..... Locked rotor burnout protection, Reverse polarity protection For details, please refer to p. 608.
- Dielectric strength ..... 50/60 Hz, 500 VAC, for 1 minute (between lead wire conductors and frame)
- Insulation resistance ..... 10 MΩ min. at 500 VDC (between lead wire conductors and frame)
- Sound pressure level (SPL) ..... A-weighted sound pressure level (SPL) at 1 m away from the air inlet.
- Storage temperature ..... -30 to +70˚C (Non-condensing)
- Lead wire ..... Inlet ⊕Red ⊖Black Sensor Yellow Control Brown
  Outlet ⊕Orange ⊖Gray Sensor Purple Control White
- Mass ..... 300 g

Specifications

The models listed below **have a pulse sensor with PWM control.**

Model no.	Rated voltage [V]	Operating voltage range [V]	PWM duty cycle* [%]	Rated current [A]	Rated input [W]	Rated speed [min⁻¹] Inlet	Rated speed [min⁻¹] Outlet	Max. airflow [m³/min]	Max. airflow [CFM]	Max. static pressure [Pa]	Max. static pressure [inchH₂O]	SPL [dB (A)]	Operating temperature [˚C]	Expected life [h]
9CRE0612P0G001	12	10.8 to 13.2	100	2.3	27.6	16500	13000	2.0	70.6	1000	4.0	66	-20 to +70	40000/60˚C (70000/40˚C)
			0	0.22	2.7	3600	2800	0.43	15.1	47.6	0.19	32		

PWM frequency is 25 kHz. Models without ratings for 0% PWM duty cycle have zero speed at 0%. When control terminal is open, speed is the same as at 100% duty cycle.

Airflow - Static Pressure Characteristics / PWM Duty - Speed Characteristics Example

9CRE0612P0G001 With pulse sensor with PWM control

PWM duty cycle

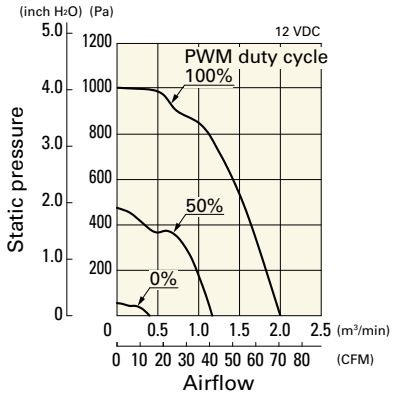

Operating voltage range

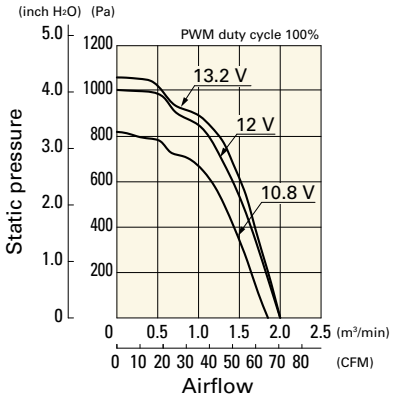

PWM duty - Speed characteristics example

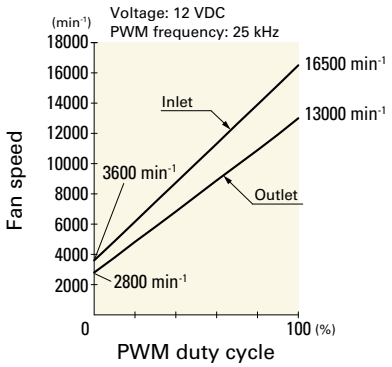

Dimensions (unit: mm)

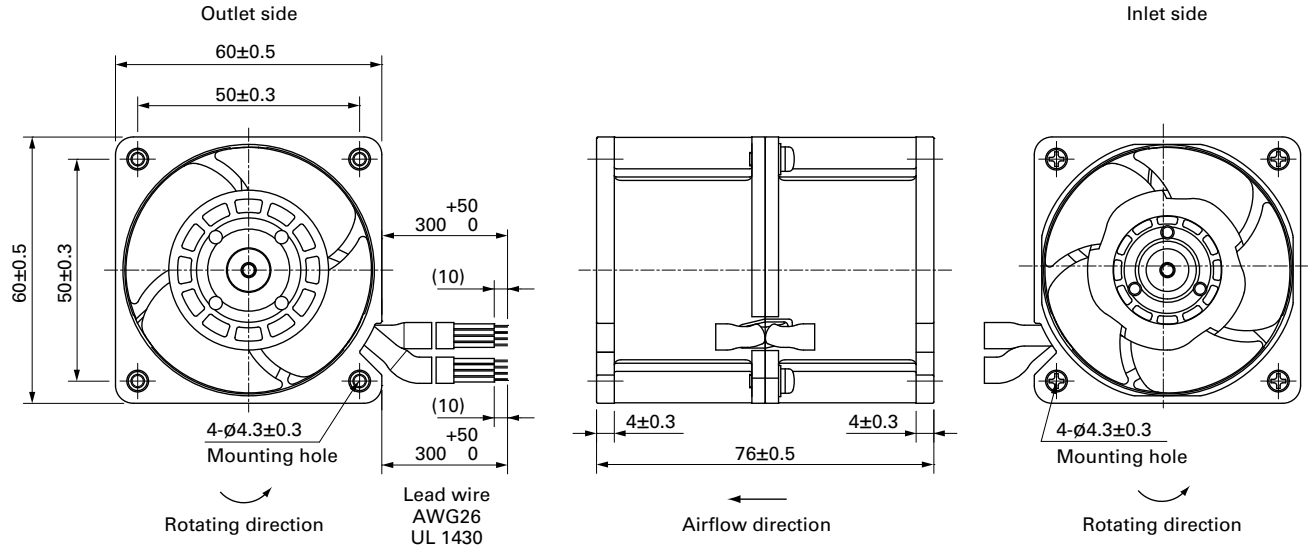

Reference Dimensions of Mounting Holes and Vent Opening (unit: mm)

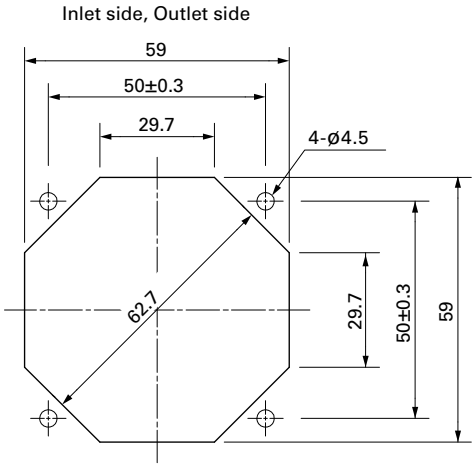

Options

Finger guards page: p. 590

Model no.: 109-139E, 109-139H

Resin filter kits page: p. 598

Model no.: 109-1003F13 (13PPI), 109-1003F20 (20PPI),
109-1003F30 (30PPI), 109-1003F40 (40PPI)

Resin finger guards page: p. 597

Model no.: 109-1003G

60×60×76 mm

San Ace 60 9CRA type

General Specifications

- Material ..... Frame: Plastic (Flammability: UL 94V-0), Impeller: Plastic (Flammability: UL 94V-0)
- Expected life ..... See the table below. (L10 life: 90% survival rate for continuous operation in free air at 60˚C, rated voltage) Expected life at 40°C is for reference only.
- Motor protection function ..... Locked rotor burnout protection, Reverse polarity protection For details, please refer to p. 608.
- Dielectric strength ..... 50/60 Hz, 500 VAC, for 1 minute (between lead wire conductors and frame)
- Insulation resistance ..... 10 MΩ min. at 500 VDC (between lead wire conductors and frame)
- Sound pressure level (SPL) ..... A-weighted sound pressure level (SPL) at 1 m away from the air inlet.
- Storage temperature ..... -30 to +70˚C (Non-condensing)
- Lead wire ..... Inlet ⊕Red ⊖Black Sensor Yellow Control Brown
  Outlet ⊕Orange ⊖Gray Sensor Purple Control White
- Mass ..... 270 g

Specifications

The models listed below **have a pulse sensor with PWM control.**

Model no.	Rated voltage [V]	Operating voltage range [V]	PWM duty cycle* [%]	Rated current [A]	Rated input [W]	Rated speed [min⁻¹] Inlet	Rated speed [min⁻¹] Outlet	Max. airflow [m³/min]	Max. airflow [CFM]	Max. static pressure [Pa]	Max. static pressure [inchH₂O]	SPL [dB (A)]	Operating temperature [˚C]	Expected life [h]
9CRA0612P0G001	12	10.8 to 13.2	100	2.3	27.6	16500	13000	2.0	70.6	1000	4.0	66	-20 to +70	40000/60˚C (70000/40˚C)
			0	0.22	2.7	3600	2800	0.43	15.1	47.6	0.19	32		
9CRA0612P0S001			100	1.5	18.0	14000	11000	1.7	60.0	720	2.89	63		
			0	0.17	2.1	3200	2500	0.38	13.4	37.6	0.15	29		

PWM frequency is 25 kHz. Models without ratings for 0% PWM duty cycle have zero speed at 0%. When control terminal is open, speed is the same as at 100% duty cycle.

Note: The » mark indicates Short Lead Time Service applicable models. See p. 664 for details.

Airflow - Static Pressure Characteristics / PWM Duty - Speed Characteristics Example

9CRA0612P0G001 With pulse sensor with PWM control

PWM duty cycle

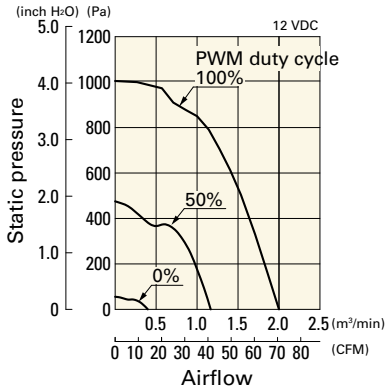

Operating voltage range

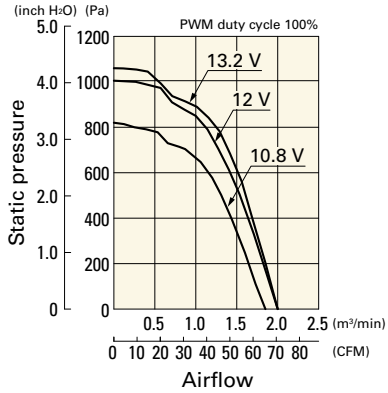

PWM duty - Speed characteristics example

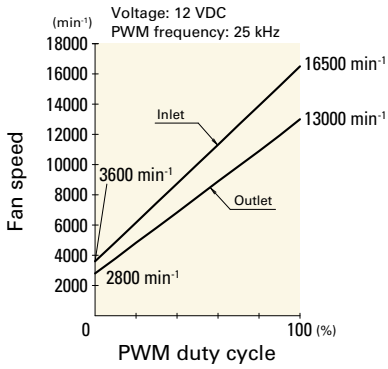

Airflow - Static Pressure Characteristics / PWM Duty - Speed Characteristics Example

9CRA0612P0S001 With pulse sensor with PWM control

PWM duty cycle

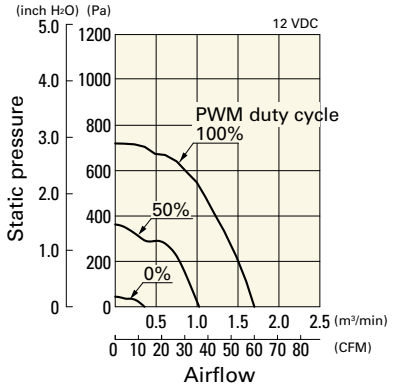

Operating voltage range

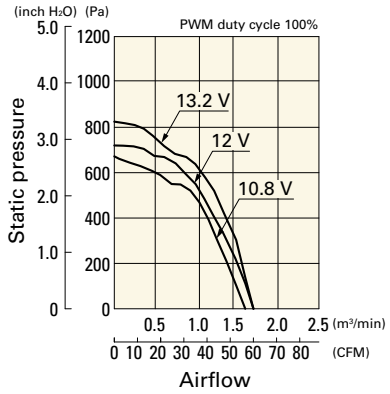

PWM duty - Speed characteristics example

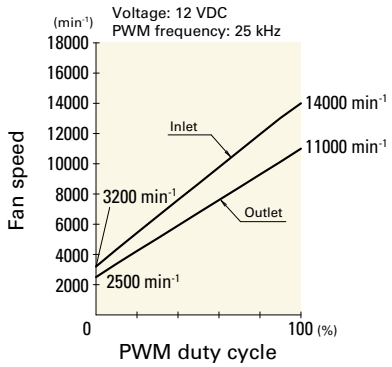

Dimensions (unit: mm)

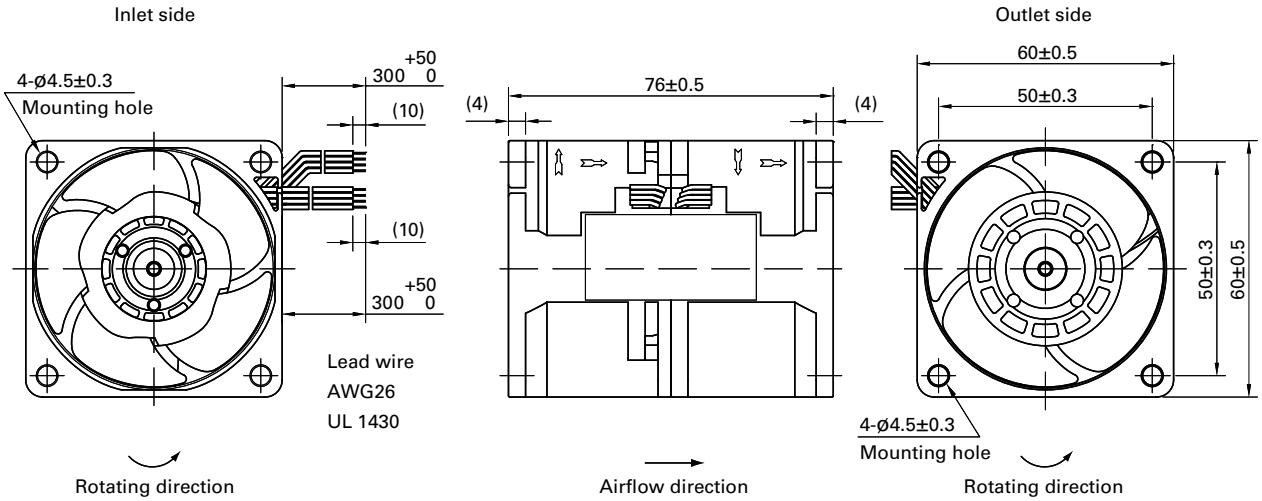

Reference Dimensions of Mounting Holes and Vent Opening (unit: mm)

Inlet side, Outlet side

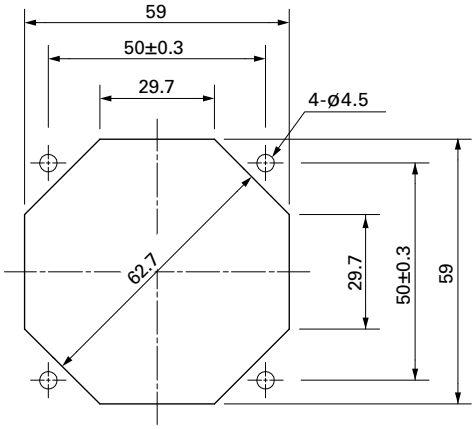

Options

Finger guards page: p. 590

Model no.: 109-139E, 109-139H

Resin finger guards page: p. 597

Model no.: 109-1003G

Resin filter kits page: p. 598

Model no.: 109-1003F13 (13PPI), 109-1003F20 (20PPI),
109-1003F30 (30PPI), 109-1003F40 (40PPI)

80×80×80 mm

San Ace 80 9CRB type

General Specifications

- Material ..... Frame: Plastic (Flammability: UL 94V-0), Impeller: Plastic (Flammability: UL 94V-0)
- Expected life ..... See the table below. (L10 life: 90% survival rate for continuous operation in free air at 60˚C, rated voltage) Expected life at 40°C is for reference only.
- Motor protection function ..... Locked rotor burnout protection, Reverse polarity protection For details, please refer to p. 608.
- Dielectric strength ..... 50/60 Hz, 500 VAC, for 1 minute (between lead wire conductors and frame)
- Insulation resistance ..... 10 MΩ min. at 500 VDC (between lead wire conductors and frame)
- Sound pressure level (SPL) ..... A-weighted sound pressure level (SPL) at 1 m away from the air inlet.
- Storage temperature ..... -30 to +70˚C (Non-condensing)
- Lead wire ..... Inlet ⊕Red ⊖Black Sensor Yellow Control Brown
  Outlet ⊕Orange ⊖Gray Sensor Purple Control White
- Mass ..... 430 g

Specifications

The models listed below **have a pulse sensor with PWM control.**

Model no.	Rated voltage [V]	Operating voltage range [V]	PWM duty cycle* [%]	Rated current [A]	Rated input [W]	Rated speed [min⁻¹] Inlet	Rated speed [min⁻¹] Outlet	Max. airflow [m³/min]	Max. airflow [CFM]	Max. static pressure [Pa]	Max. static pressure [inchH₂O]	SPL [dB (A)]	Operating temperature [˚C]	Expected life [h]
9CRB0812P8G001	12	10.8 to 13.2	100	9.2	110.4	14600	12200	5.5	194	1150	4.6	80	-20 to +70	40000/60˚C (70000/40˚C)
			20	0.17	2.04	2000	1670	0.7	24.7	21.6	0.09	24		

PWM frequency is 25 kHz. Models without ratings for 0% PWM duty cycle have zero speed at 0%. When control terminal is open, speed is the same as at 100% duty cycle.

Note: The » mark indicates Short Lead Time Service applicable models. See p. 664 for details.

Airflow - Static Pressure Characteristics / PWM Duty - Speed Characteristics Example

9CRB0812P8G001 With pulse sensor with PWM control

PWM duty cycle

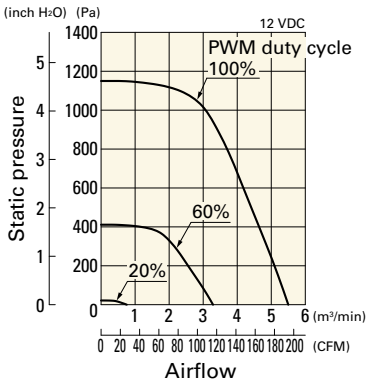

Operating voltage range

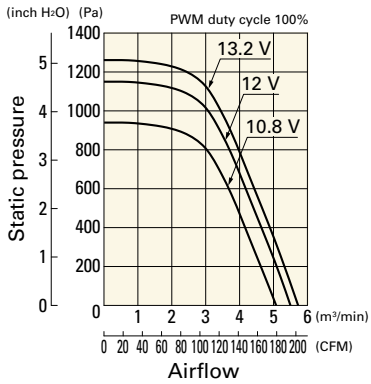

PWM duty - Speed characteristics example

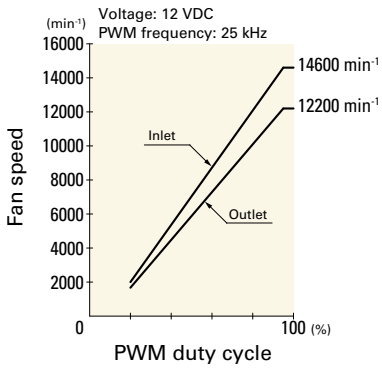

Dimensions (unit: mm)

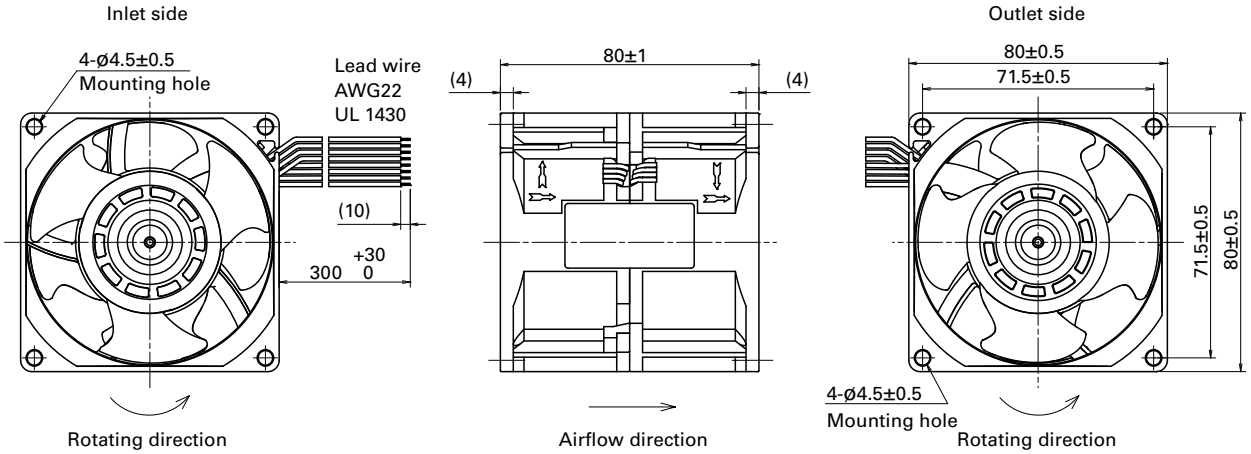

Reference Dimensions of Mounting Holes and Vent Opening (unit: mm)

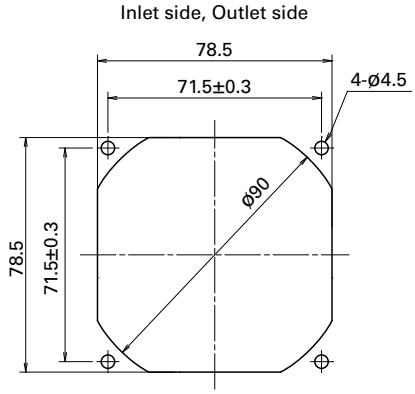

Options

Finger guards page: p. 590

Model no.: 109-049E, 109-049H

Resin finger guards page: p. 597

Model no.: 109-1002G

Resin filter kits page: p. 598

Model no.: 109-1002F13 (13PPI), 109-1002F20 (20PPI),
109-1002F30 (30PPI), 109-1002F40 (40PPI)

80×80×80 mm

San Ace 80 9CRE type Low Vibration Fan

General Specifications

- Material ..... Frame: Aluminum, Impeller: Plastic (Flammability: UL 94V-1)
- Expected life ..... See the table below. (L10 life: 90% survival rate for continuous operation in free air at 60˚C, rated voltage) Expected life at 40°C is for reference only.
- Motor protection function ..... Locked rotor burnout protection, Reverse polarity protection For details, please refer to p. 608.
- Dielectric strength ..... 50/60 Hz, 500 VAC, for 1 minute (between lead wire conductors and frame)
- Insulation resistance ..... 10 MΩ min. at 500 VDC (between lead wire conductors and frame)
- Sound pressure level (SPL) ..... A-weighted sound pressure level (SPL) at 1 m away from the air inlet.
- Storage temperature ..... -30 to +70˚C (Non-condensing)
- Lead wire ..... Inlet ⊕Red ⊖Black Sensor Yellow Control Brown
  Outlet ⊕Orange ⊖Gray Sensor Purple Control White
- Mass ..... 490 g

Specifications

The models listed below **have a pulse sensor with PWM control.**

Model no.	Rated voltage [V]	Operating voltage range [V]	PWM duty cycle* [%]	Rated current [A]	Rated input [W]	Rated speed [min⁻¹] Inlet	Rated speed [min⁻¹] Outlet	Max. airflow [m³/min]	Max. airflow [CFM]	Max. static pressure [Pa]	Max. static pressure [inchH₂O]	SPL [dB (A)]	Operating temperature [˚C]	Expected life [h]
9CRE0812P8G001	12	10.8 to 13.2	100	5.3	63.6	12000	11300	4.5	158.9	1150	4.62	76	-20 to +70	40000/60˚C (70000/40˚C)
			0	0.2	2.4	2000	1900	0.74	26.1	31.9	0.13	30		

PWM frequency is 25 kHz. Models without ratings for 0% PWM duty cycle have zero speed at 0%. When control terminal is open, speed is the same as at 100% duty cycle.

Airflow - Static Pressure Characteristics / PWM Duty - Speed Characteristics Example

9CRE0812P8G001 With pulse sensor with PWM control

PWM duty cycle

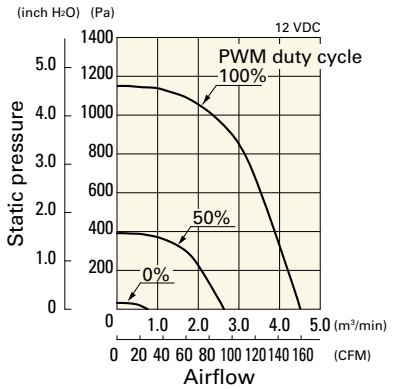

Operating voltage range

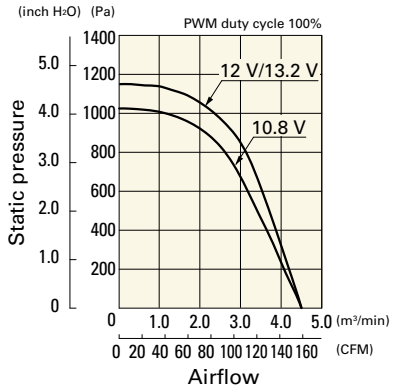

PWM duty - Speed characteristics example

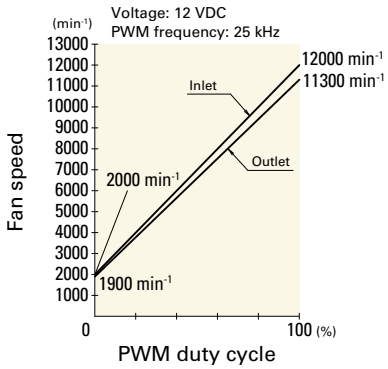

Dimensions (unit: mm)

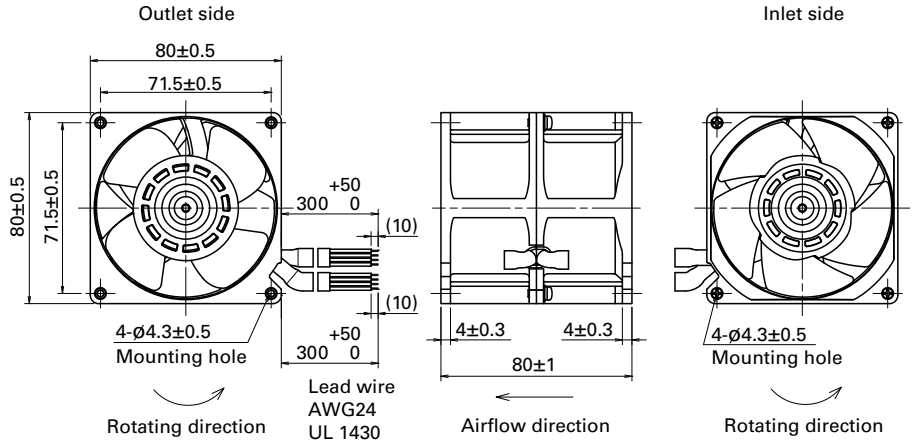

Reference Dimensions of Mounting Holes and Vent Opening (unit: mm)

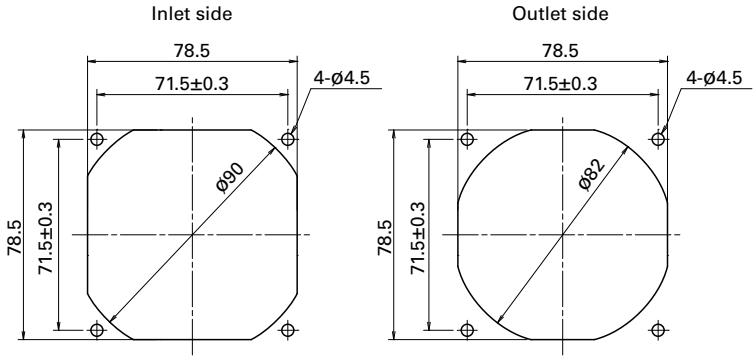

Options

Finger guards page: p. 590

Model no.: 109-049E, 109-049H

Resin filter kits page: p. 598

Model no.: 109-1002F13 (13PPI), 109-1002F20 (20PPI),
109-1002F30 (30PPI), 109-1002F40 (40PPI)

Resin finger guards page: p. 597

Model no.: 109-1002G

80×80×80 mm

San Ace 80 9CRA type

General Specifications

- Material ..... Frame: Plastic (Flammability: UL 94V-0), Impeller: Plastic (Flammability: UL 94V-0)
- Expected life ..... See the table below. (L10 life: 90% survival rate for continuous operation in free air at 60˚C, rated voltage) Expected life at 40°C is for reference only.
- Motor protection function ..... Locked rotor burnout protection, Reverse polarity protection For details, please refer to p. 608.
- Dielectric strength ..... 50/60 Hz, 500 VAC, for 1 minute (between lead wire conductors and frame)
- Insulation resistance ..... 10 MΩ min. at 500 VDC (between lead wire conductors and frame)
- Sound pressure level (SPL) ..... A-weighted sound pressure level (SPL) at 1 m away from the air inlet.
- Storage temperature ..... -30 to +70˚C (Non-condensing)
- Lead wire ..... Inlet ⊕Red ⊖Black Sensor Yellow Control Brown
  Outlet ⊕Orange ⊖Gray Sensor Purple Control White
- Mass ..... 450 g

Specifications

The models listed below **have a pulse sensor with PWM control.**

Model no.	Rated voltage [V]	Operating voltage range [V]	PWM duty cycle* [%]	Rated current [A]	Rated input [W]	Rated speed [min⁻¹] Inlet	Rated speed [min⁻¹] Outlet	Max. airflow [m³/min]	Max. airflow [CFM]	Max. static pressure [Pa]	Max. static pressure [inchH₂O]	SPL [dB (A)]	Operating temperature [˚C]	Expected life [h]
9CRA0812P8G001	12	10.8 to 13.2	100	5.3	63.6	12000	11300	4.5	158.9	1150	4.62	76	-20 to +70	40000/60˚C (70000/40˚C)
			0	0.2	2.4	2000	1900	0.74	26.1	31.9	0.13	30		
9CRA0812P8H001			100	3.3	39.6	10000	9400	3.75	133.9	798	3.21	72		
			0	0.2	2.4	2000	1900	0.74	26.1	31.9	0.13	30		
9CRA0824P8G001	24	21.6 to 26.4	100	2.65	63.6	12000	11300	4.5	158.9	1150	4.62	76		
			0	0.09	2.16	2000	1900	0.74	26.1	31.9	0.13	30		
9CRA0848P8G001	48	40.8 to 55.2	100	1.32	63.4	12000	11300	4.5	158.9	1150	4.62	76		
			0	0.29	13.9	5000	4700	1.88	66.2	200	0.8	52		

PWM frequency is 25 kHz. Models without ratings for 0% PWM duty cycle have zero speed at 0%. When control terminal is open, speed is the same as at 100% duty cycle.

Note 1: Sensor and control options are available for selection. Refer to the table on p. 636.
Note 2: The » mark indicates Short LeadTime Service applicable models. See p. 664 for details.

Airflow - Static Pressure Characteristics / PWM Duty - Speed Characteristics Example

9CRA0812P8G001 With pulse sensor with PWM control

PWM duty cycle

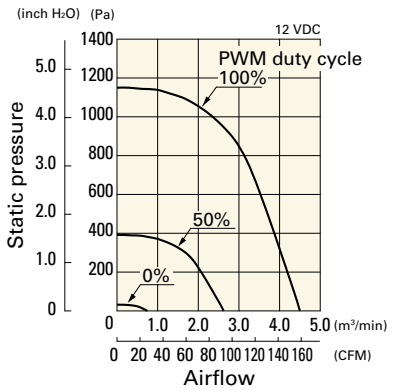

Operating voltage range

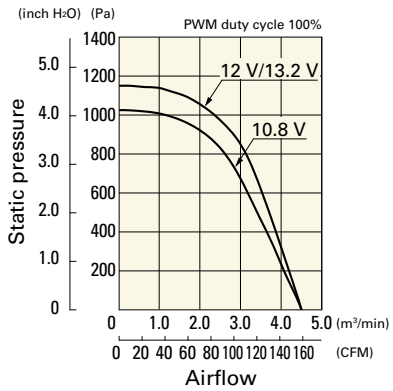

PWM duty - Speed characteristics example

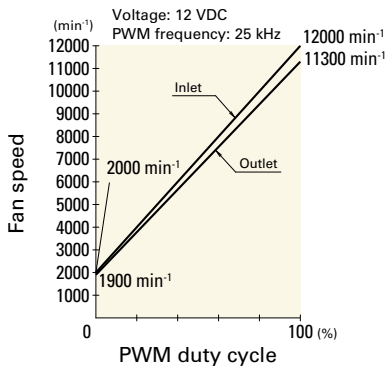

Airflow - Static Pressure Characteristics / PWM Duty - Speed Characteristics Example

9CRA0812P8H001 With pulse sensor with PWM control

PWM duty cycle

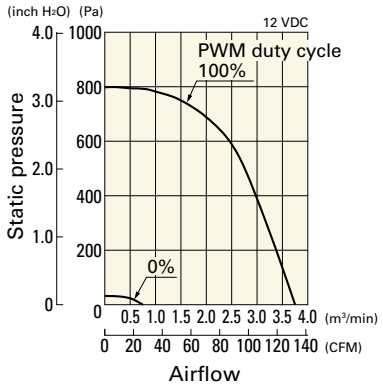

Operating voltage range

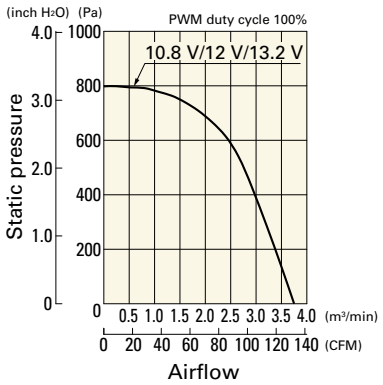

PWM duty - Speed characteristics example

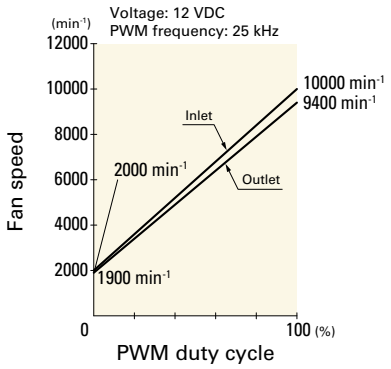

9CRA0824P8G001 With pulse sensor with PWM control

PWM duty cycle

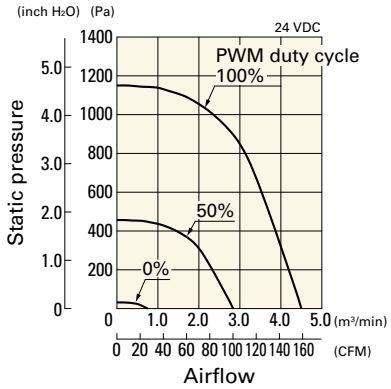

Operating voltage range

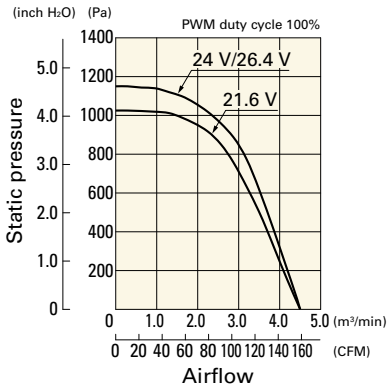

PWM duty - Speed characteristics example

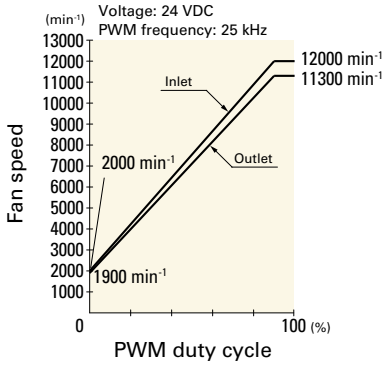

9CRA0848P8G001 With pulse sensor with PWM control

PWM duty cycle

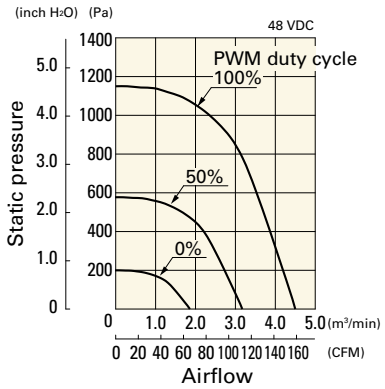

Operating voltage range

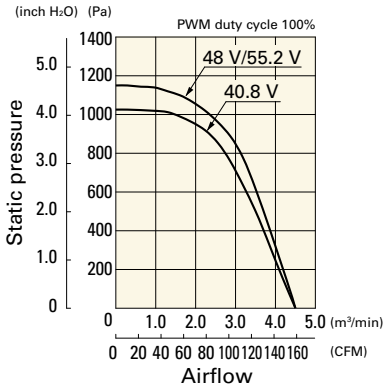

PWM duty - Speed characteristics example

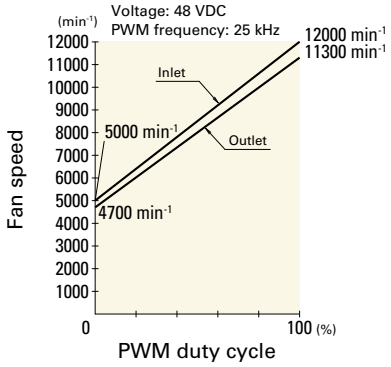

Dimensions (unit: mm)

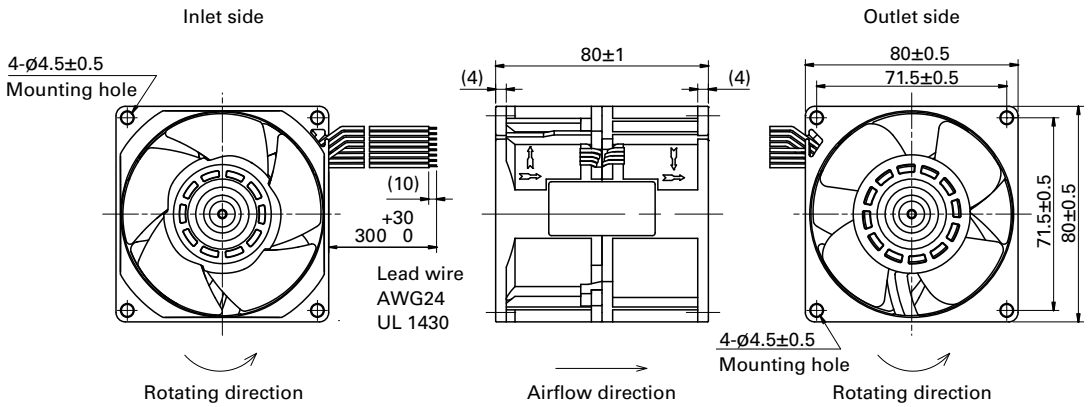

Reference Dimensions of Mounting Holes and Vent Opening (unit: mm)

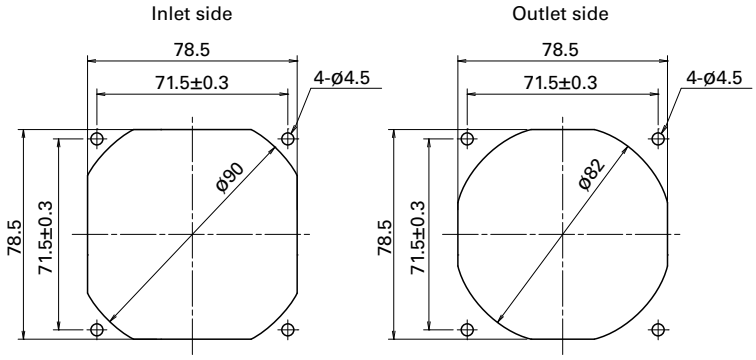

Options

Finger guards page: p. 590

Model no.: 109-049E, 109-049H

Resin filter kits page: p. 598

Model no.: 109-1002F13 (13PPI), 109-1002F20 (20PPI),
109-1002F30 (30PPI), 109-1002F40 (40PPI)

Resin finger guards page: p. 597

Model no.: 109-1002G

Counter Rotating Fan

92×92×76 mm

San Ace 92 9CRA type

General Specifications

- Material ..... Frame: Plastic (Flammability: UL 94V-0), Impeller: Plastic (Flammability: UL 94V-0)
- Expected life ..... See the table below. (L10 life: 90% survival rate for continuous operation in free air at 60˚C, rated voltage) Expected life at 40°C is for reference only.
- Motor protection function ..... Locked rotor burnout protection, Reverse polarity protection For details, please refer to p. 608.
- Dielectric strength ..... 50/60 Hz, 500 VAC, for 1 minute (between lead wire conductors and frame)
- Insulation resistance ..... 10 MΩ min. at 500 VDC (between lead wire conductors and frame)
- Sound pressure level (SPL) ..... A-weighted sound pressure level (SPL) at 1 m away from the air inlet.
- Storage temperature ..... -30 to +70˚C (Non-condensing)
- Lead wire ..... Inlet ⊕Red ⊖Black Sensor Yellow Control Brown
  Outlet ⊕Orange ⊖Gray Sensor Purple Control White
- Mass ..... 510 g

Specifications

The models listed below **have a pulse sensor with PWM control.**

Model no.	Rated voltage [V]	Operating voltage range [V]	PWM duty cycle* [%]	Rated current [A]	Rated input [W]	Rated speed [min⁻¹] Inlet	Rated speed [min⁻¹] Outlet	Max. airflow [m³/min]	Max. airflow [CFM]	Max. static pressure [Pa]	Max. static pressure [inchH₂O]	SPL [dB (A)]	Operating temperature [˚C]	Expected life [h]
9CRA0912P0G001	12	10.2 to 13.2	100	9.0	108.0	13300	12200	5.8	205	1650	6.63	81	-20 to +70	40000/60˚C (70000/40˚C)
			20	0.42	5.04	3500	3200	1.48	52.3	140	0.56	47		
9CRA0948P0G601	48	36 to 60	100	2.2	105.6	13300	12200	5.8	205	1650	6.63	81		
			20	0.15	7.2	3500	3200	1.48	52.3	140	0.56	47		

PWM frequency is 25 kHz. Models without ratings for 0% PWM duty cycle have zero speed at 0%. When control terminal is open, speed is the same as at 100% duty cycle.

Note: The » mark indicates Short Lead Time Service applicable models. See p. 664 for details.

Airflow - Static Pressure Characteristics / PWM Duty - Speed Characteristics Example

9CRA0912P0G001 With pulse sensor with PWM control

PWM duty cycle

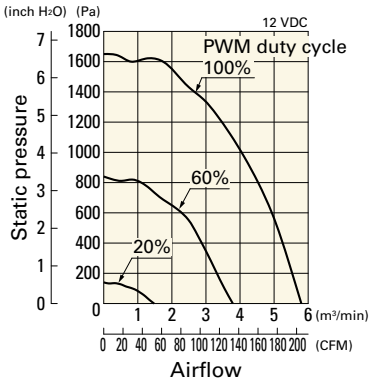

Operating voltage range

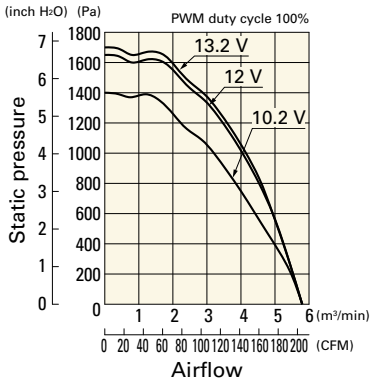

PWM duty - Speed characteristics example

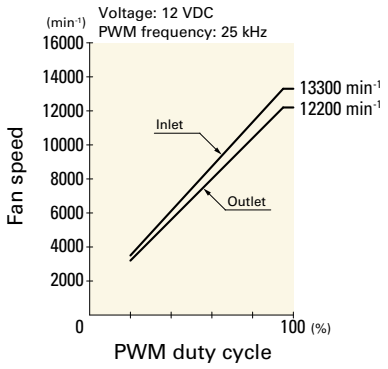

Airflow - Static Pressure Characteristics / PWM Duty - Speed Characteristics Example

9CRA0948P0G601 With pulse sensor with PWM control

PWM duty cycle

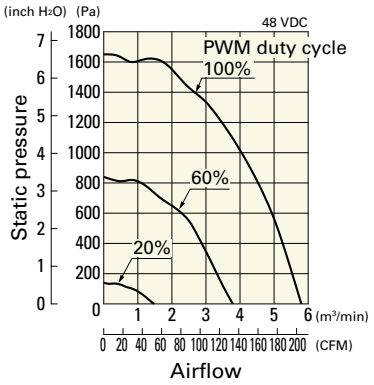

Operating voltage range

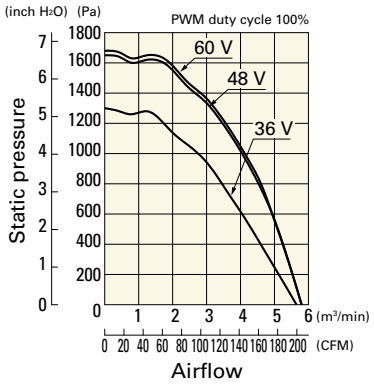

PWM duty - Speed characteristics example

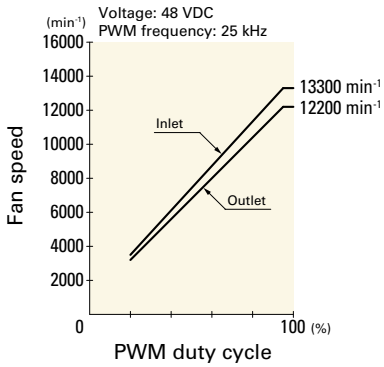

Dimensions (unit: mm)

Inlet side

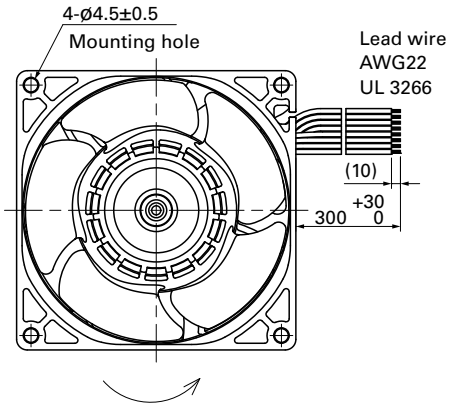

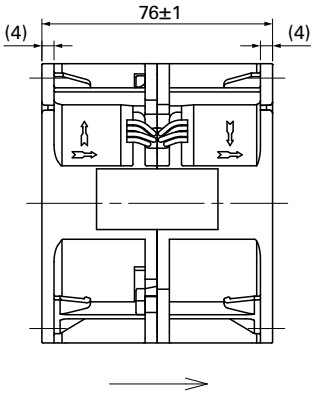

Outlet side

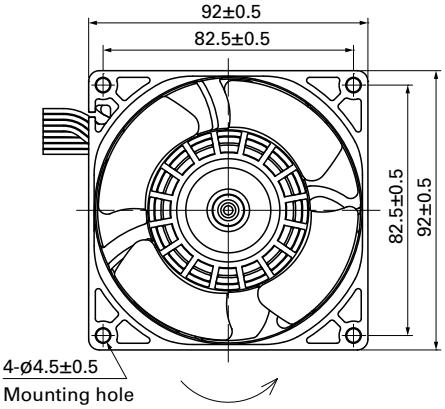

Reference Dimensions of Mounting Holes and Vent Opening (unit: mm)

Inlet side, Outlet side

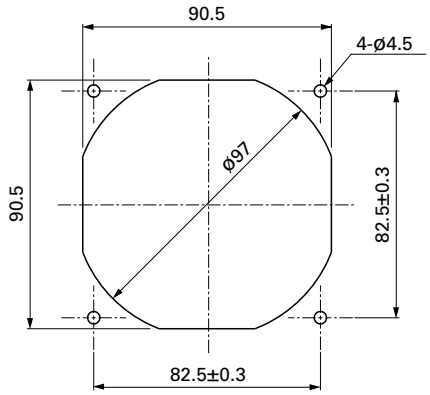

Options

Finger guards page: p. 591

Model no.: 109-099E, 109-099H

Resin finger guards page: p. 597

Model no.: 109-1001G

Resin filter kits page: p. 598

Model no.: 109-1001F13 (13PPI), 109-1001F20 (20PPI),
109-1001F30 (30PPI), 109-1001F40 (40PPI)

Counter Rotating Fan

120×120×76 mm

San Ace 120 9CR type

General Specifications

- Material ..... Frame: Plastic (Flammability: UL 94V-0), Impeller: Plastic (Flammability: UL 94V-1)
- Expected life ..... See the table below. (L10 life: 90% survival rate for continuous operation in free air at 60˚C, rated voltage) Expected life at 40°C is for reference only.
- Motor protection function ..... Locked rotor burnout protection, Reverse polarity protection For details, please refer to p. 608.
- Dielectric strength ..... 50/60 Hz, 500 VAC, for 1 minute (between lead wire conductors and frame)
- Insulation resistance ..... 10 MΩ min. at 500 VDC (between lead wire conductors and frame)
- Sound pressure level (SPL) ..... A-weighted sound pressure level (SPL) at 1 m away from the air inlet.
- Storage temperature ..... -30 to +70˚C (Non-condensing)
- Lead wire ..... Inlet ⊕Red ⊖Black Sensor Yellow Control Brown
  Outlet ⊕Orange ⊖Gray Sensor Purple Control White
- Mass ..... 670 g

Specifications

The models listed below **have a pulse sensor with PWM control.**

Model no.	Rated voltage [V]	Operating voltage range [V]	PWM duty cycle* [%]	Rated current [A]	Rated input [W]	Rated speed [min⁻¹] Inlet	Rated speed [min⁻¹] Outlet	Max. airflow [m³/min]	Max. airflow [CFM]	Max. static pressure [Pa]	Max. static pressure [inchH₂O]	SPL [dB (A)]	Operating temperature [˚C]	Expected life [h]
9CR1212P0G03	12	10.8 to 13.2	100	7.2	86.4	6200	3800	8.5	300	480	1.93	70	-20 to +60	40000/60˚C (70000/40˚C)
			0	1.1	13.2	2700	1800	3.8	134	95	0.38	51		

PWM frequency is 25 kHz. Models without ratings for 0% PWM duty cycle have zero speed at 0%. When control terminal is open, speed is the same as at 100% duty cycle.

Note: Sensor and control options are available for selection. Refer to the table on p. 636.

Airflow - Static Pressure Characteristics / PWM Duty - Speed Characteristics Example

9CR1212P0G03 With pulse sensor with PWM control

PWM duty cycle

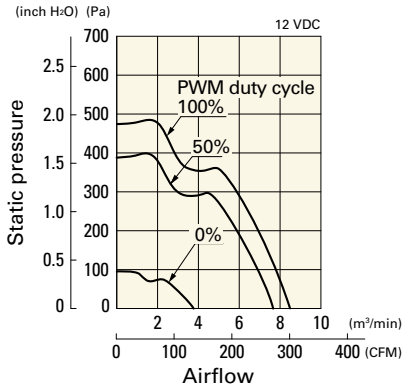

Operating voltage range

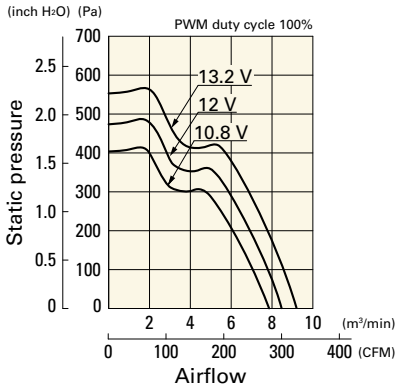

PWM duty - Speed characteristics example

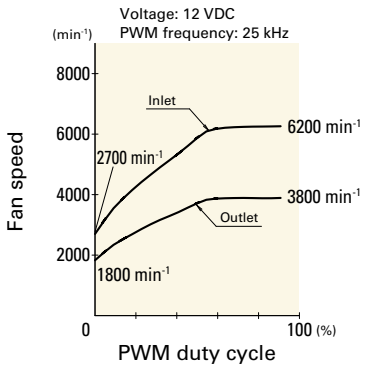

Dimensions (unit: mm)

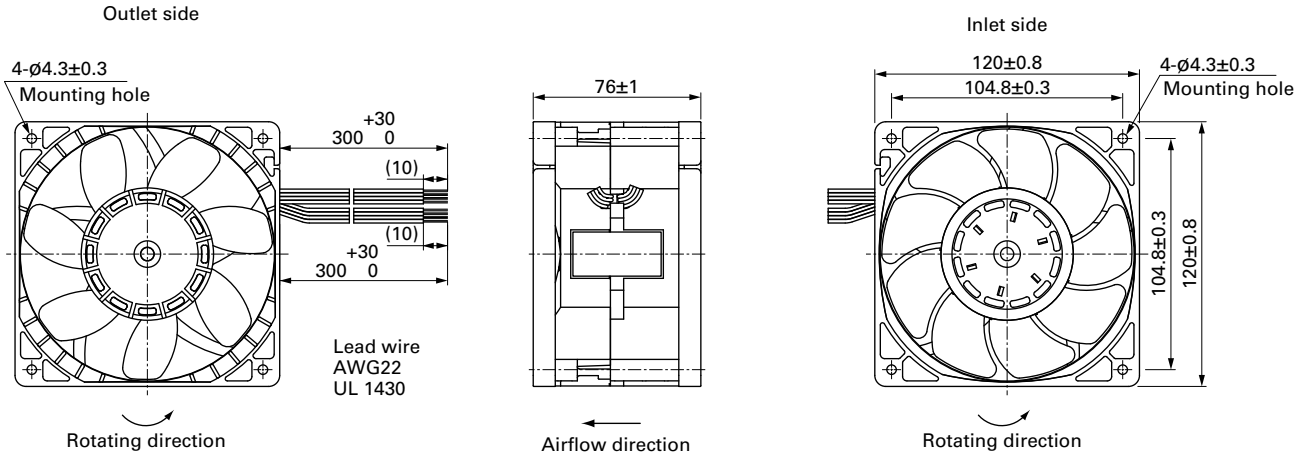

Reference Dimensions of Mounting Holes and Vent Opening (unit: mm)

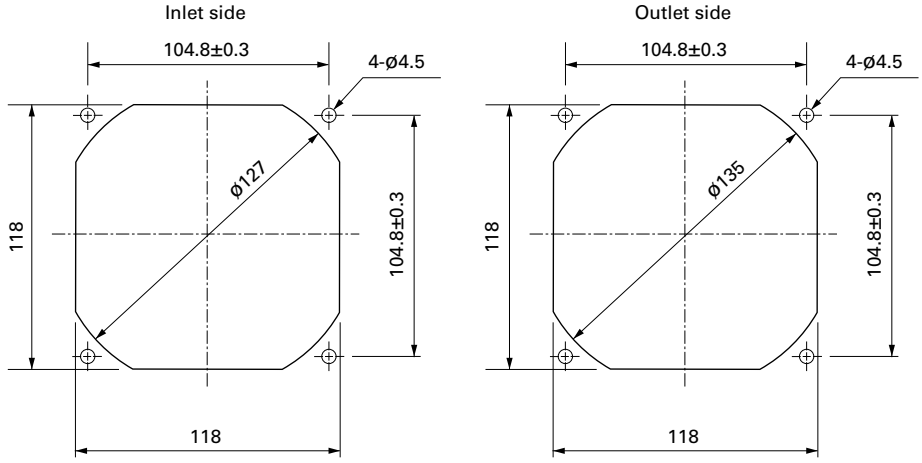

Options

Finger guards page: p. 591

Model no.: 109-019E, 109-019K

Resin finger guards page: p. 597

Model no.: 109-1000G

Resin filter kits page: p. 598

Model no.: 109-1000F13 (13PPI), 109-1000F20 (20PPI),
109-1000F30 (30PPI), 109-1000F40 (40PPI)

Counter Rotating Fan

ø172×150×102 mm

San Ace 172 9CR type

Sidecut type

General Specifications

- Material ..... Frame: Aluminum, Impeller: Plastic (Flammability: UL 94V-0)
- Expected life ..... See the table below. (L10 life: 90% survival rate for continuous operation in free air at 60˚C, rated voltage) Expected life at 40°C is for reference only.
- Motor protection function ..... Locked rotor burnout protection, Reverse polarity protection For details, please refer to p. 608.
- Dielectric strength ..... 50/60 Hz, 500 VAC, for 1 minute (between lead wire conductors and frame)
- Insulation resistance ..... 10 MΩ min. at 500 VDC (between lead wire conductors and frame)
- Sound pressure level (SPL) ..... A-weighted sound pressure level (SPL) at 1 m away from the air inlet.
- Storage temperature ..... -30 to +70˚C (Non-condensing)
- Lead wire ..... Inlet ⊕Red ⊖Black Sensor Yellow Control Brown
  Outlet ⊕Orange ⊖Gray Sensor Purple Control White
- Mass ..... 1600 g

Specifications

The models listed below **have a pulse sensor with PWM control.**

Model no.	Rated voltage [V]	Operating voltage range [V]	PWM duty cycle* [%]	Rated current [A]	Rated input [W]	Rated speed [min⁻¹] Inlet	Rated speed [min⁻¹] Outlet	Max. airflow [m³/min]	Max. airflow [CFM]	Max. static pressure [Pa]	Max. static pressure [inchH₂O]	SPL [dB (A)]	Operating temperature [˚C]	Expected life [h]
9CR5748P9G001	48	36 to 72	100	5.5	264	7300	6400	18	636	1400	5.62	83	-20 to +70	40000/60˚C (70000/40˚C)
			0	0.5	24	2400	1900	5.5	194.3	152	0.61	54		

PWM frequency is 25 kHz. Models without ratings for 0% PWM duty cycle have zero speed at 0%. When control terminal is open, speed is the same as at 100% duty cycle.

Note: The » mark indicates Short Lead Time Service applicable models. See p. 664 for details.

Airflow - Static Pressure Characteristics / PWM Duty - Speed Characteristics Example

9CR5748P9G001 With pulse sensor with PWM control

PWM duty cycle

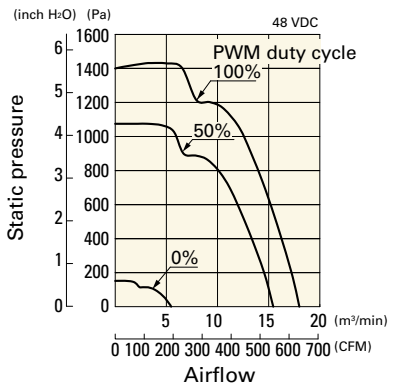

Operating voltage range

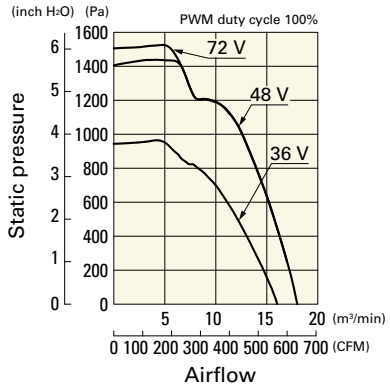

PWM duty - Speed characteristics example

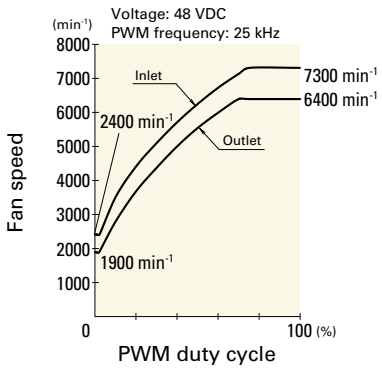

Dimensions (unit: mm)

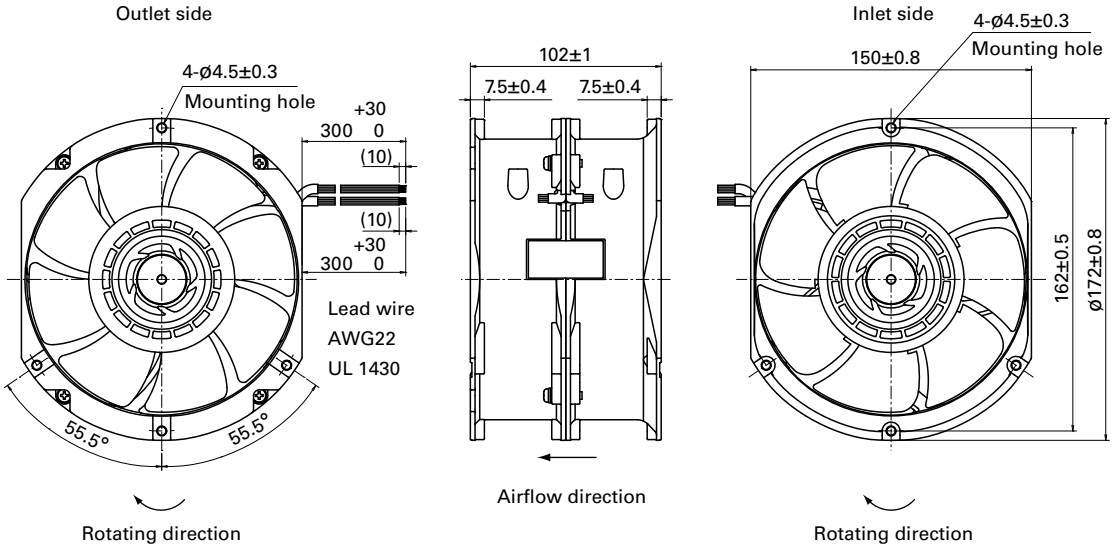

Reference Dimensions of Mounting Holes and Vent Opening (unit: mm)

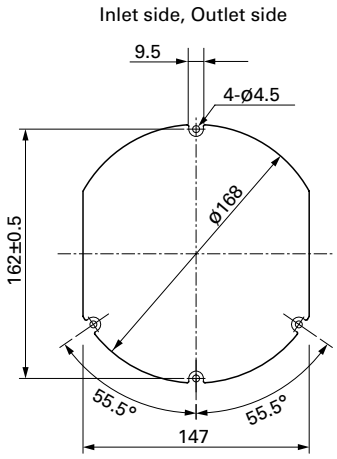

Options

Finger guards page: p. 592

Model no.: 109-1155

Reversible Flow Fan

The wind directions can be switched with these fans. Equivalent cooling performance can be obtained in both directions.

Model Numbering System

Not every combination of the following codes or characters is available. Contact us for an available combination.

9RF	13	12	P	3	H	001
Type name	Frame size	Voltage	PWM control	Frame thickness	Speed code	Individual customer's spec

Type name	9RF	
Frame size (mm)	09 ø92	13 ø136
Voltage (V)	12 12	24 24
Frame thickness (mm)	1 38	3 28
Speed code	H	

How to Read Specifications (DC fan)

The following is a sample. See respective product pages for detailed information.

Model no.	Rated voltage [V]	Operating voltage range [V]	Rated current [A]	Rated input [W]	Rated speed [min^{-1}]	Max. airflow [m^3/min]	Max. airflow [CFM]	Max. static pressure [Pa]	Max. static pressure [inchH_2O]	SPL [dB (A)]	Operating temperature [°C]	Expected life [h]
9GA0412G7001	12	7 to 13.8	0.17	2.04	13100	0.36	12.7	192	0.77	42	-20 to +70	40000/60°C (70000/40°C)

Rated voltage ····· This is the necessary voltage to drive the fan. E.g.) 12 VDC, 24 VDC, 48 VDC
Operating voltage range ····· The voltage range over which fan operation is guaranteed.
Rated current ····· The current when the fan is operating at rated voltage (at free air).
Rated input ····· The power value when the fan is operating at rated voltage (at free air).
Rated speed ····· The speed when the fan is operating at rated voltage (at free air).
Max. airflow ····· The airflow at 0 Pa static pressure when the fan is operating at rated voltage. (Measured using the double chamber method)
Max. static pressure ····· The static pressure at 0 m^3/min airflow when the fan is operating at rated voltage. (Measured using the double chamber method)
SPL ····· A-weighted sound pressure level (SPL) when the fan operates at the rated speed.
For the measurement method, see the Technical Materials section in the catalog.
Operating temperature ····· The temperature range over which fan operation is guaranteed (Non-condensing).
Expected life ····· Service life hours that 90% of bearings will survive without failing when continuously operated at the rated voltage and 60°C temperature. Expected life at 40°C is for reference only.
For more information, please refer to the technical material section.

ø92×38 mm

San Ace 92RF 9RF type

General Specifications

- Material ..... Frame: Plastic (Flammability: UL 94V-0), Impeller: Plastic (Flammability: UL 94V-0)
- Expected life ..... See the table below. (L10 life: 90% survival rate for continuous operation in free air at 60˚C, rated voltage) Expected life at 40°C is for reference only.
- Motor protection function ..... Locked rotor burnout protection, Reverse polarity protection For details, please refer to p. 608.
- Dielectric strength ..... 50/60 Hz, 500 VAC, for 1 minute (between lead wire conductors and frame)
- Insulation resistance ..... 10 MΩ min. at 500 VDC (between lead wire conductors and frame)
- Sound pressure level (SPL) ..... A-weighted sound pressure level (SPL) at 1 m away from the air inlet.
- Storage temperature ..... -30 to +70˚C (Non-condensing)
- Lead wire ..... ⊕Red ⊖Black Sensor Yellow Control Brown
- Mass ..... 150 g

Specifications

The models listed below **have ribs and a pulse sensor with PWM control.**

Model no.	Airflow direction	Rated voltage [V]	Operating voltage range [V]	PWM duty cycle* [%]	Rated current [A]	Rated input [W]	Rated speed [min⁻¹]	Max. airflow [m³/min]	Max. airflow [CFM]	Max. static pressure [Pa]	Max. static pressure [inchH₂O]	SPL [dB (A)]	Operating temperature [˚C]	Expected life [h]
9RF0912P1H001	Forward	12	10.2 to 13.8	100	0.17	2.0	5500	1.2	42.4	156	0.63	39	-20 to +70	40000/60˚C (70000/40˚C)
	Reverse			0	0.17	2.0	5300	1.2	42.4	146	0.59	43		
9RF0924P1H001	Forward	24	20.4 to 27.6	100	0.09	2.2	5500	1.2	42.4	156	0.63	39		
	Reverse			0	0.09	2.2	5300	1.2	42.4	146	0.59	43		

PWM frequency is 25 kHz. When control terminal is open, speed is the same as at 100% PWM duty cycle.

Note: The mark indicates Short Lead Time Service applicable models. See p. 664 for details.

Airflow - Static Pressure Characteristics / PWM Duty - Speed Characteristics Example

9RF0912P1H001 With pulse sensor with PWM control

Operating voltage range

Forward

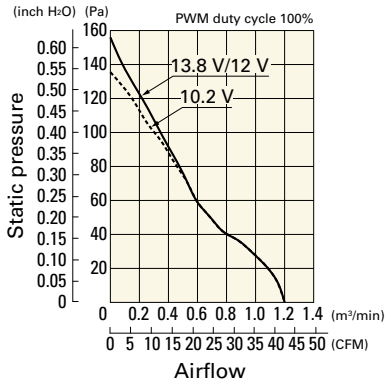

Operating voltage range

Reverse

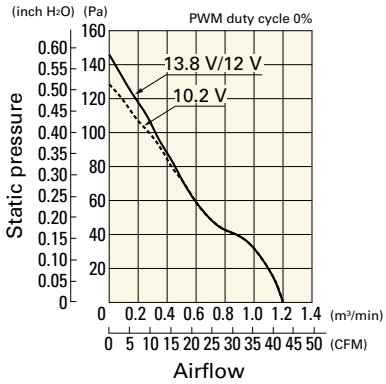

PWM duty - Speed characteristics example

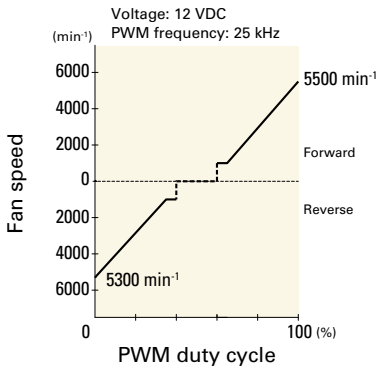

Airflow - Static Pressure Characteristics / PWM Duty - Speed Characteristics Example

9RF0924P1H001 With pulse sensor with PWM control

Operating voltage range

Forward

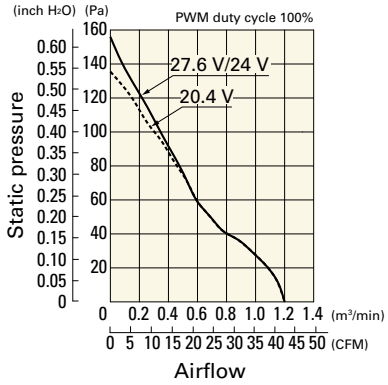

Operating voltage range

Reverse

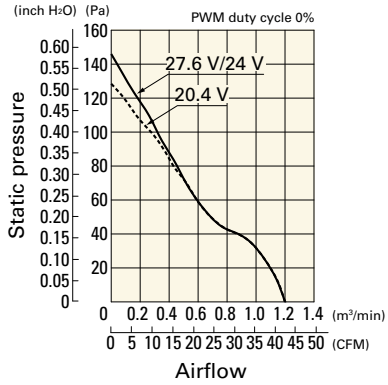

PWM duty - Speed characteristics example

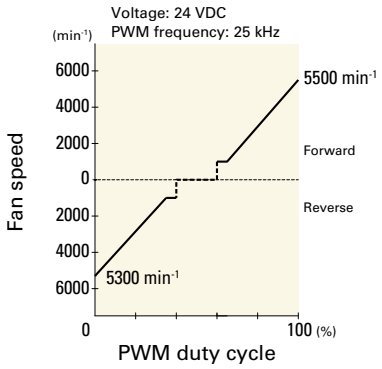

Dimensions (unit: mm)

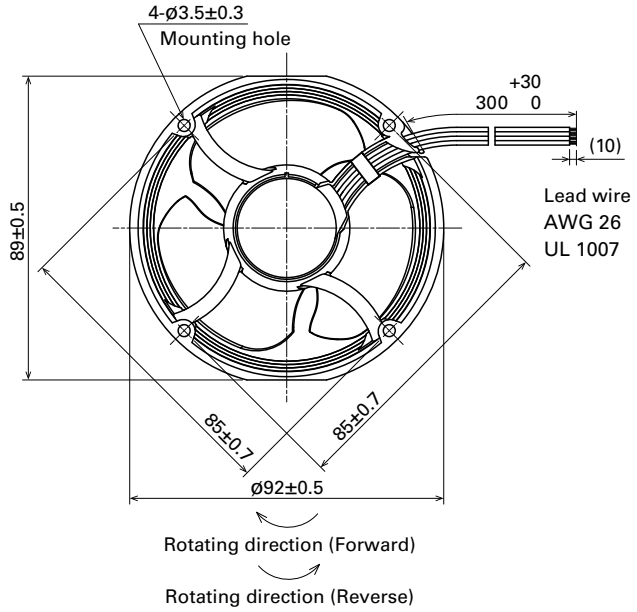

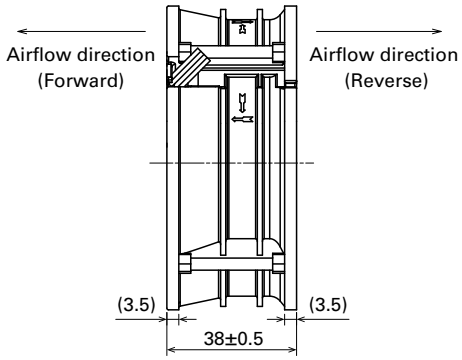

Reference Dimensions of Mounting Holes and Vent Opening (unit: mm)

Impeller side, Nameplate side

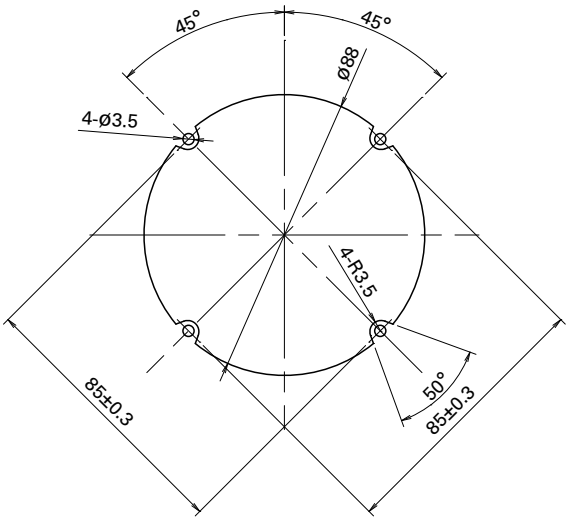

Options

Finger guards page: p. 590

Model no.: 109-1147

ø136×28 mm

San Ace 136RF 9RFA type

General Specifications

- Material ..... Frame: Plastic (Flammability: UL 94V-0), Impeller: Plastic (Flammability: UL 94V-0)
- Expected life ..... See the table below. (L10 life: 90% survival rate for continuous operation in free air at 60°C, rated voltage) Expected life at 40°C is for reference only.
- Motor protection function ..... Locked rotor burnout protection, Reverse polarity protection For details, please refer to p. 608.
- Dielectric strength ..... 50/60 Hz, 500 VAC, for 1 minute (between lead wire conductors and frame)
- Insulation resistance ..... 10 MΩ min. at 500 VDC (between lead wire conductors and frame)
- Sound pressure level (SPL) ..... A-weighted sound pressure level (SPL) at 1 m away from the air inlet.
- Storage temperature ..... -30 to +70°C (Non-condensing)
- Lead wire ..... ⊕Red ⊖Black Sensor Yellow Control Brown
- Mass ..... 204 g

Specifications

The models listed below **have ribs and a pulse sensor with PWM control.**

Model no.	Airflow direction	Rated voltage [V]	Operating voltage range [V]	PWM duty cycle* [%]	Rated current [A]	Rated input [W]	Rated speed [min⁻¹]	Max. airflow [m³/min]	Max. airflow [CFM]	Max. static pressure [Pa]	Max. static pressure [inchH₂O]	SPL [dB (A)]	Operating temperature [°C]	Expected life [h]
9RFA1312P3G001	Forward	12	10.2 to 13.8	100	0.25	3.00	5450	2.10	74.2	285	1.14	49	-25 to +70	40000/60°C (70000/40°C)
	Reverse			0	0.25	3.00	5450	2.05	72.4	280	1.12	52		
9RFA1312P3H001	Forward			100	0.16	1.92	4350	1.67	59.2	185	0.74	44		
	Reverse			0	0.16	1.92	4350	1.63	57.8	180	0.72	47		
9RFA1324P3G001	Forward	24	20.4 to 27.6	100	0.13	3.12	5450	2.10	74.2	285	1.14	49		
	Reverse			0	0.13	3.12	5450	2.05	72.4	280	1.12	52		
9RFA1324P3H001	Forward			100	0.08	1.92	4350	1.67	59.2	185	0.74	44		
	Reverse			0	0.08	1.92	4350	1.63	57.8	180	0.72	47		

PWM frequency is 25 kHz. When control terminal is open, speed is the same as at 100% PWM duty cycle.

Note: The » mark indicates Short Lead Time Service applicable models. See p. 664 for details.

Airflow - Static Pressure Characteristics / PWM Duty - Speed Characteristics Example

9RFA1312P3G001 With pulse sensor with PWM control

Operating voltage range

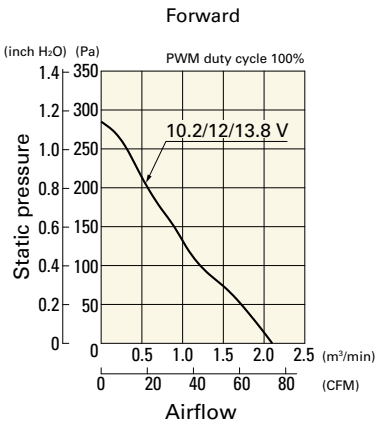

Operating voltage range

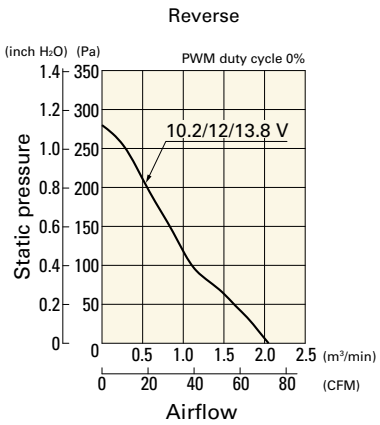

PWM duty - Speed characteristics example

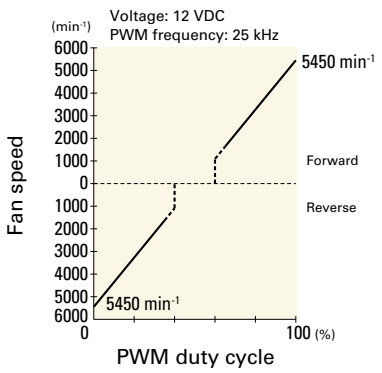

Airflow - Static Pressure Characteristics / PWM Duty - Speed Characteristics Example

9RFA1312P3H001 With pulse sensor with PWM control

Operating voltage range

Forward

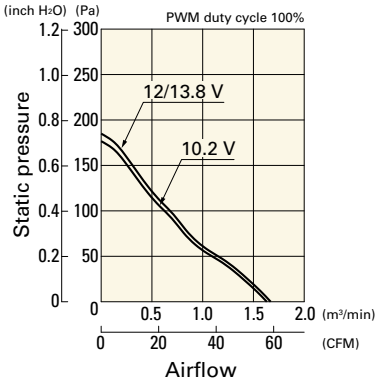

Operating voltage range

Reverse

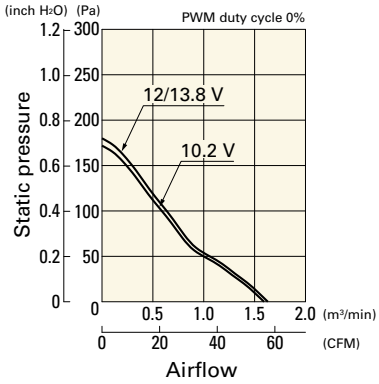

PWM duty - Speed characteristics example

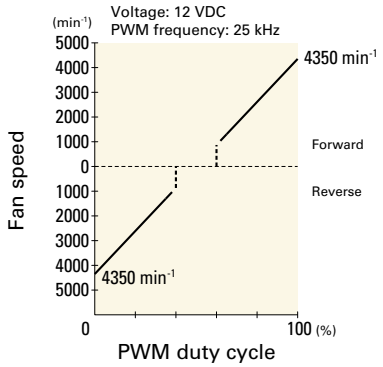

9RFA1324P3G001 With pulse sensor with PWM control

Operating voltage range

Forward

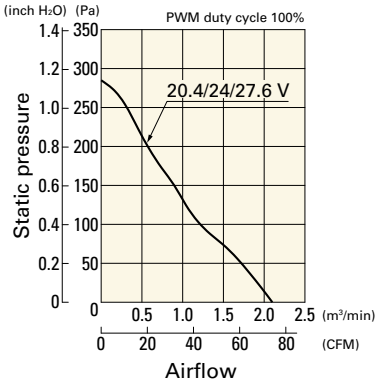

Operating voltage range

Reverse

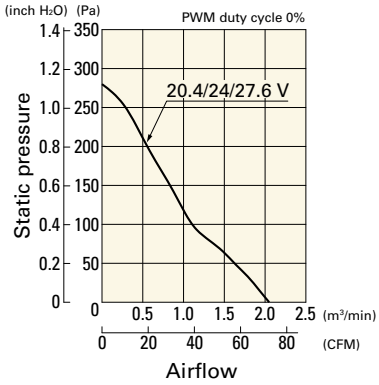

PWM duty - Speed characteristics example

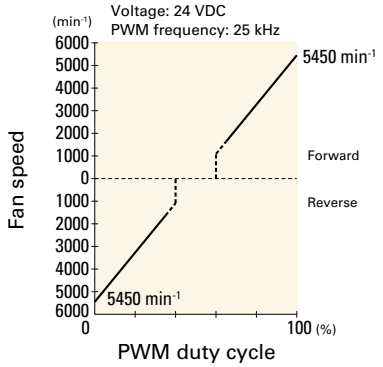

9RFA1324P3H001 With pulse sensor with PWM control

Operating voltage range

Forward

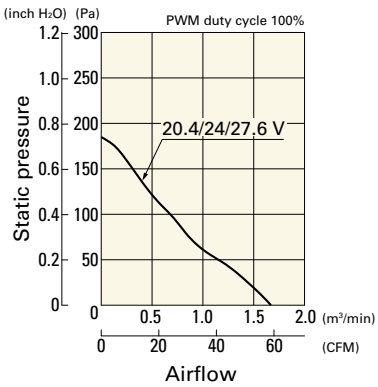

Operating voltage range

Reverse

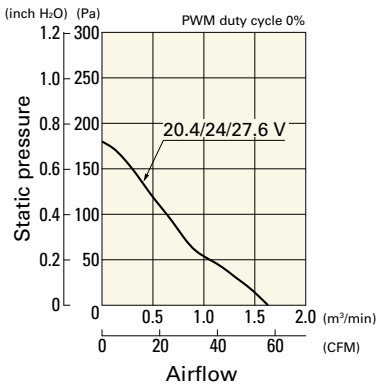

PWM duty - Speed characteristics example

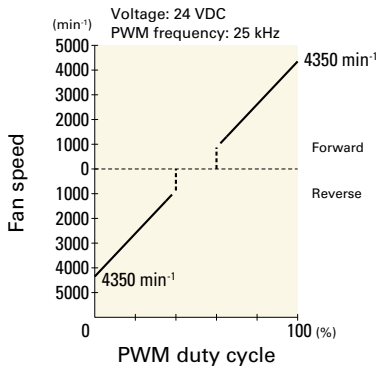

Dimensions (unit: mm)

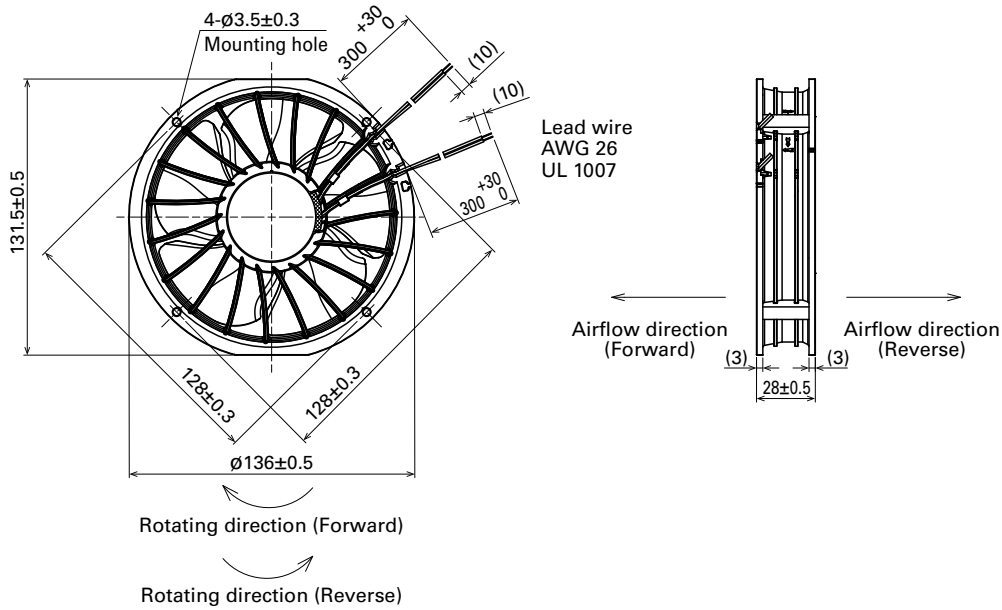

Reference Dimensions of Mounting Holes and Vent Opening (unit: mm)

Impeller side, Nameplate side

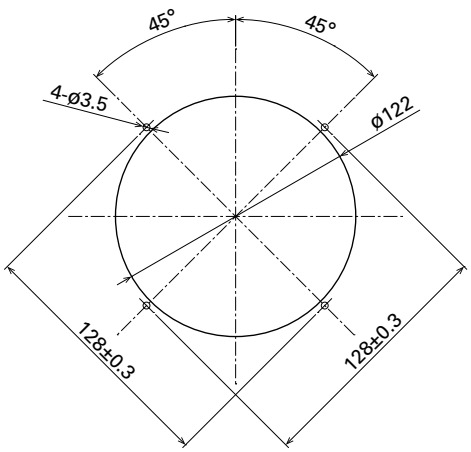

Options

Finger guards	page: p. 591

Model no.: 109-1139

ø136×28 mm

San Ace 136RF 9RF type

General Specifications

- Material ..... Frame: Plastic (Flammability: UL 94V-0), Impeller: Plastic (Flammability: UL 94V-0)
- Expected life ..... See the table below. (L10 life: 90% survival rate for continuous operation in free air at 60˚C, rated voltage) Expected life at 40°C is for reference only.
- Motor protection function ..... Locked rotor burnout protection, Reverse polarity protection For details, please refer to p. 608.
- Dielectric strength ..... 50/60 Hz, 500 VAC, for 1 minute (between lead wire conductors and frame)
- Insulation resistance ..... 10 MΩ min. at 500 VDC (between lead wire conductors and frame)
- Sound pressure level (SPL) ..... A-weighted sound pressure level (SPL) at 1 m away from the air inlet.
- Storage temperature ..... -30 to +70˚C (Non-condensing)
- Lead wire ..... ⊕Red ⊖Black Sensor Yellow Control Brown
- Mass ..... 220 g

Specifications

The models listed below **have ribs and a pulse sensor with PWM control.**

Model no.	Airflow direction	Rated voltage [V]	Operating voltage range [V]	PWM duty cycle* [%]	Rated current [A]	Rated input [W]	Rated speed [min⁻¹]	Max. airflow [m³/min]	Max. airflow [CFM]	Max. static pressure [Pa]	Max. static pressure [inchH₂O]	SPL [dB (A)]	Operating temperature [˚C]	Expected life [h]
9RF1312P3H601	Forward	12	10.2 to 13.8	100	0.15	1.8	3100	2.0	70.7	102	0.41	35	-20 to +70	40000/60˚C (70000/40˚C)
	Reverse			0	0.15	1.8	3100	2.0	70.7	104	0.418	46		
9RF1324P3H001	Forward	24	20.4 to 27.6	100	0.09	2.2	3100	2.0	70.7	102	0.41	35		
	Reverse			0	0.09	2.2	3100	2.0	70.7	104	0.418	46		

PWM frequency is 25 kHz. When control terminal is open, speed is the same as at 100% PWM duty cycle.

Note: The mark indicates Short Lead Time Service applicable models. See p. 664 for details.

Airflow - Static Pressure Characteristics / PWM Duty - Speed Characteristics Example

9RF1312P3H601 With pulse sensor with PWM control

Operating voltage range

Forward

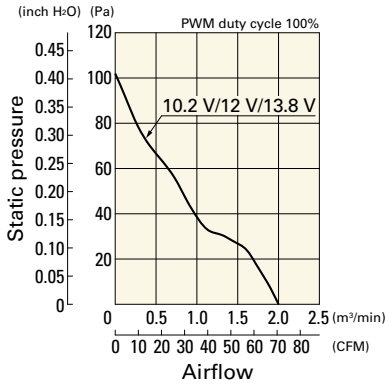

Operating voltage range

Reverse

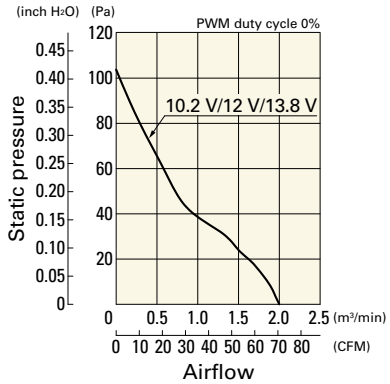

PWM duty - Speed characteristics example

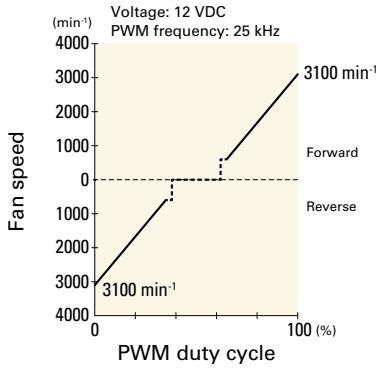

Airflow - Static Pressure Characteristics / PWM Duty - Speed Characteristics Example

9RF1324P3H001 With pulse sensor with PWM control

Operating voltage range

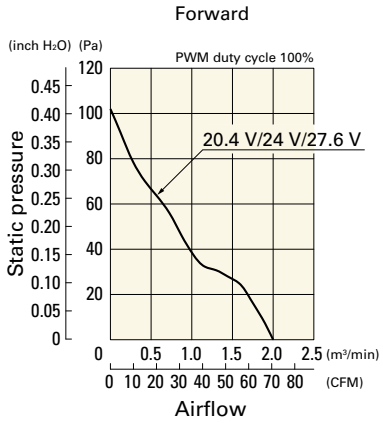

Operating voltage range

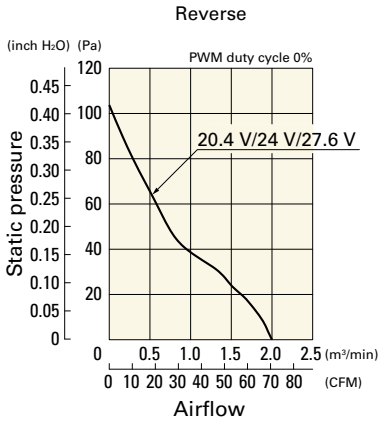

PWM duty - Speed characteristics example

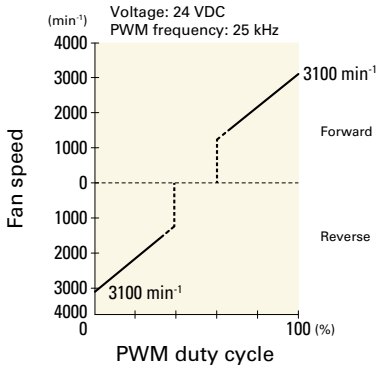

Dimensions (unit: mm)

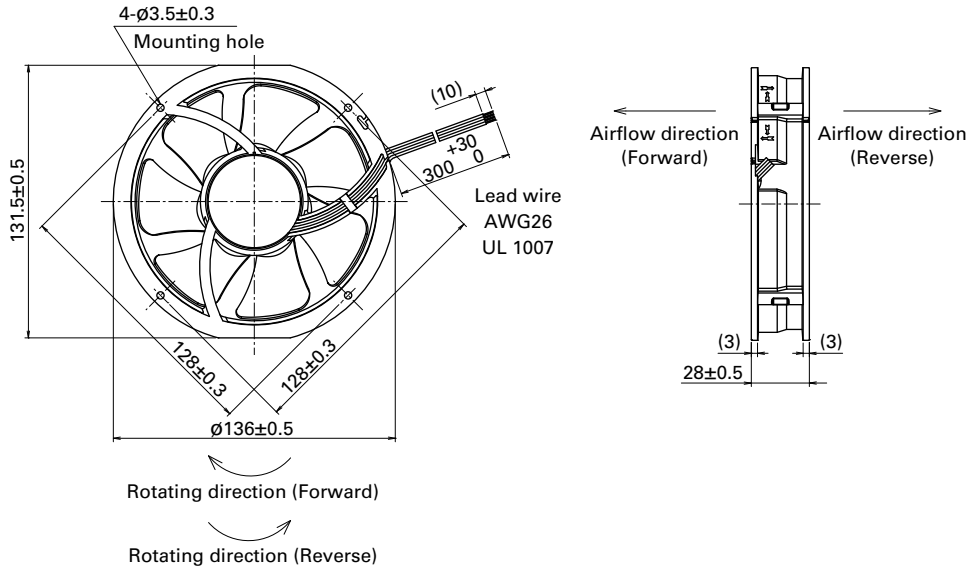

Reference Dimensions of Mounting Holes and Vent Opening (unit: mm)

Impeller side, Nameplate side

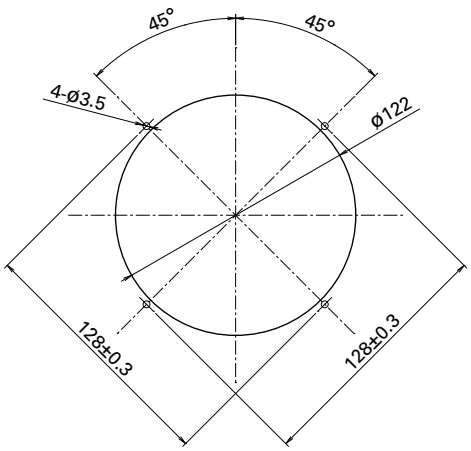

Options

Finger guards	page: p. 591

Model no.: 109-1139

Splash Proof Fan

Cooling fan of IP54, IP55 and IP68 waterproof capability. For more information on IP rating, refer to p. 617.
Related product: Splash Proof Centrifugal Fan p. 315, Splash Proof Blower p. 341, Oil Proof Fan p. 345

Model Numbering System

Not every combination of the following codes or characters is available. Contact us for an available combination.

9WL	14	48	L	1	001	
Type name	Frame size	Voltage	Speed code	Frame thickness	Sensor specifications	Frame form

Fans with PWM control

9WV	08	48	P	1	H	001	
Type name	Frame size	Voltage	PWM control	Frame thickness	Speed code	Individual customer's spec (2 to 3 digits)	Frame form

Type name	9WL 9WP 9WV etc.
Frame size (mm)	04 (40×40), 06 (60×60), 08 (80×80), 09 (92×92), 12 (120×120), 14 (140×140), 17 (ø172), 57 (ø172×150 (sidecut))
Voltage (V)	12 24 48 12 24 48 etc.
Speed code	A D E F G H J L M S etc.
Frame thickness (mm)	1 (38), 4 (25), 5 (51), 6 (20)
Sensor specifications	01, 001: With a pulse sensor 02, 002: Without a sensor D01, D001: With a lock sensor
Frame form	Nil: Plastic frame: Ribbed frame, Aluminum frame: Ribless frame 1: Plastic frame: Ribless frame

How to Read Specifications (DC fan)

The following is a sample. See respective product pages for detailed information.

Model no.	Rated voltage [V]	Operating voltage range [V]	Rated current [A]	Rated input [W]	Rated speed [min⁻¹]	Max. airflow [m³/min]	Max. airflow [CFM]	Max. static pressure [Pa]	Max. static pressure [inchH₂O]	SPL [dB (A)]	Operating temperature [°C]	Expected life [h]
9GA0412G7001	12	7 to 13.8	0.17	2.04	13100	0.36	12.7	192	0.77	42	-20 to +70	40000/60°C (70000/40°C)

Rated voltage ····· This is the necessary voltage to drive the fan. E.g.) 12 VDC, 24 VDC, 48 VDC
Operating voltage range ····· The voltage range over which fan operation is guaranteed.
Rated current ····· The current when the fan is operating at rated voltage (at free air).
Rated input ····· The power value when the fan is operating at rated voltage (at free air).
Rated speed ····· The speed when the fan is operating at rated voltage (at free air).
Max. airflow ····· The airflow at 0 Pa static pressure when the fan is operating at rated voltage. (Measured using the double chamber method)
Max. static pressure ····· The static pressure at 0 m^3/min airflow when the fan is operating at rated voltage. (Measured using the double chamber method)
SPL ····· A-weighted sound pressure level (SPL) when the fan operates at the rated speed.
For the measurement method, see the Technical Materials section in the catalog.
Operating temperature ····· The temperature range over which fan operation is guaranteed (Non-condensing).
Expected life ····· Service life hours that 90% of bearings will survive without failing when continuously operated at the rated voltage and 60°C temperature. Expected life at 40°C is for reference only.
For more information, please refer to the technical material section.

40×40×20 mm

San Ace 40W 9WPA type

IP68

General Specifications

- Material ..... Frame: Plastic (Flammability: UL 94V-0), Impeller: Plastic (Flammability: UL 94V-0)
- Expected life ..... See the table below. (L10 life: 90% survival rate for continuous operation in indoor free air at 60°C, rated voltage) Expected life at 40°C is for reference only.
- Motor protection function ..... Locked rotor burnout protection, Reverse polarity protection For details, please refer to p. 608.
- Dielectric strength ..... 50/60 Hz, 500 VAC, for 1 minute (between lead wire conductors and frame)
- Insulation resistance ..... 10 MΩ min. at 500 VDC (between lead wire conductors and frame)
- Sound pressure level (SPL) ..... A-weighted sound pressure level (SPL) at 1 m away from the air inlet.
- Storage temperature ..... -30 to +70˚C (Non-condensing)
- Lead wire ..... ⊕Red ⊖Black Sensor Yellow Control Brown (For models without PWM control, there is no speed control wiring.)
- Mass ..... 47 g
- Ingress protection ..... IP68 For more information on IP rating, refer to p. 617.

Specifications

The models listed below **have ribs and a pulse sensor with PWM control.**

Model no.	Rated voltage [V]	Operating voltage range [V]	PWM duty cycle* [%]	Rated current [A]	Rated input [W]	Rated speed [min⁻¹]	Max. airflow [m³/min]	Max. airflow [CFM]	Max. static pressure [Pa]	Max. static pressure [inchH₂O]	SPL [dB (A)]	Operating temperature [˚C]	Expected life [h]
9WPA0412P6G001	12	10.8 to 13.2	100	0.17	2.0	13700	0.38	13.4	210	0.84	44	-20 to +70	40000/60˚C (70000/40˚C)
			25	0.03	0.36	3000	0.07	2.5	9.8	0.04	12		
9WPA0424P6G001	24	21.6 to 26.4	100	0.09	2.0	13700	0.38	13.4	210	0.84	44		
			25	0.03	0.72	3600	0.09	3.2	15	0.06	14		

PWM frequency is 25 kHz. Models without ratings for 0% PWM duty cycle have zero speed at 0%. When control terminal is open, speed is the same as at 100% duty cycle.

The models listed below **have ribs and a pulse sensor.**

Model no.	Rated voltage [V]	Operating voltage range [V]	Rated current [A]	Rated input [W]	Rated speed [min⁻¹]	Max. airflow [m³/min]	Max. airflow [CFM]	Max. static pressure [Pa]	Max. static pressure [inchH₂O]	SPL [dB (A)]	Operating temperature [˚C]	Expected life [h]
9WPA0412H6001	12	7 to 13.8	0.075	0.9	8800	0.24	8.5	81	0.33	34	-20 to +70	40000/60˚C (70000/40˚C)
9WPA0424H6001	24	14 to 27.6	0.038	0.9	8800	0.24	8.5	81	0.33	34		

Note 1: Sensor and control options are available for selection. Refer to the table on p. 652.
Note 2: The mark indicates Short LeadTime Service applicable models. See p. 664 for details.

Airflow - Static Pressure Characteristics / PWM Duty - Speed Characteristics Example

9WPA0412P6G001 With pulse sensor with PWM control

PWM duty cycle

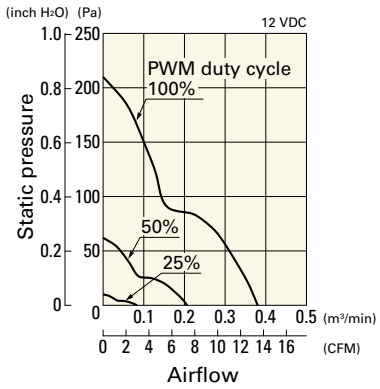

Operating voltage range

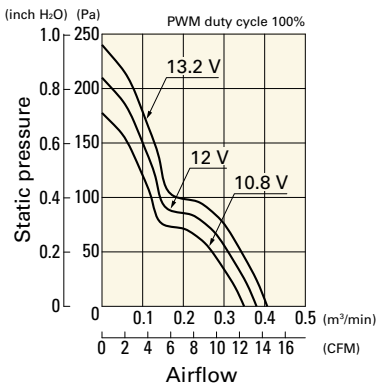

PWM duty - Speed characteristics example

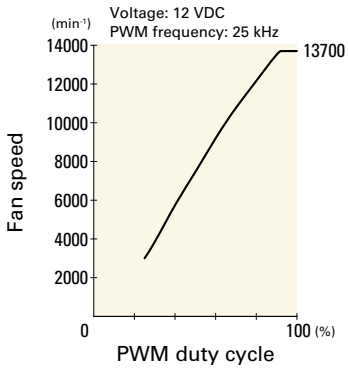

Airflow - Static Pressure Characteristics / PWM Duty - Speed Characteristics Example

9WPA0424P6G001 With pulse sensor with PWM control

PWM duty cycle

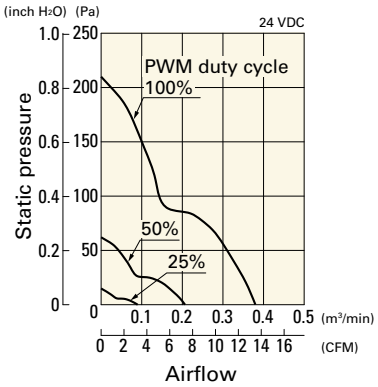

Operating voltage range

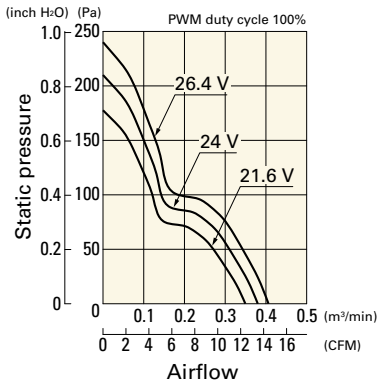

PWM duty - Speed characteristics example

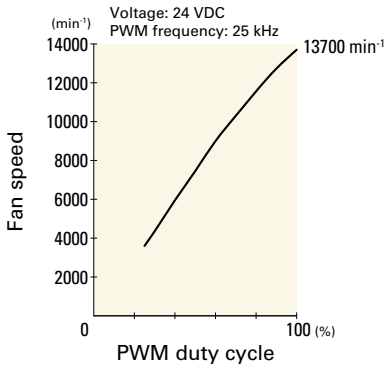

Airflow - Static Pressure Characteristics

9WPA0412H6001 With pulse sensor

Operating voltage range

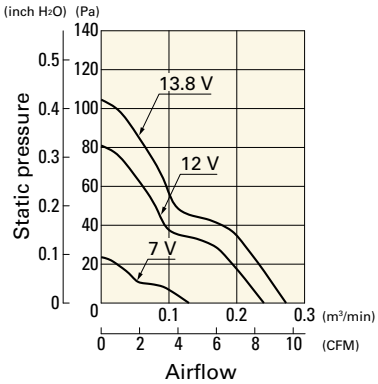

9WPA0424H6001 With pulse sensor

Operating voltage range

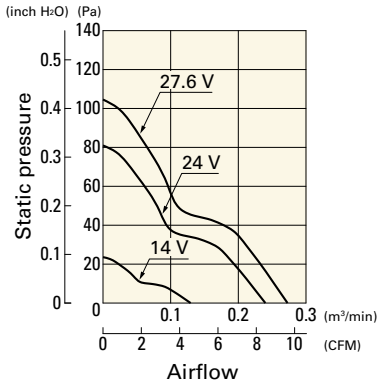

Dimensions (unit: mm) (With pulse sensor with PWM control)

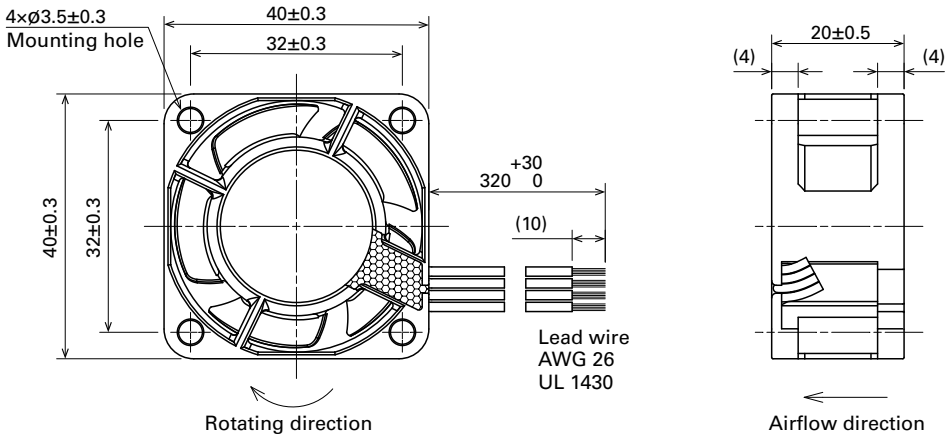

Reference Dimensions of Mounting Holes and Vent Opening (unit: mm)

Inlet side, Outlet side

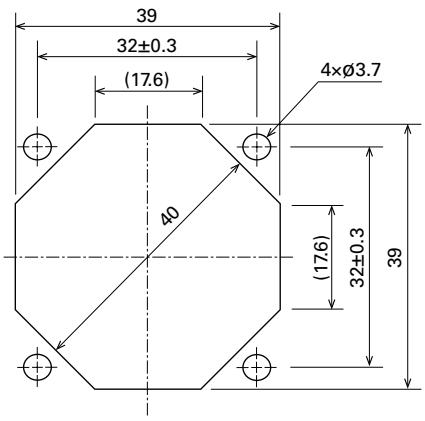

Options

Finger guards page: p. 590

Model no.: 109-059, 109-059H

40×40×20 mm

IP68

San Ace 40W 9WP type

General Specifications

- Material ..... Frame: Plastic (Flammability: UL 94V-0), Impeller: Plastic (Flammability: UL 94V-1)
- Expected life ..... See the table below. (L10 life: 90% survival rate for continuous operation in indoor free air at 60°C, rated voltage) Expected life at 40°C is for reference only.
- Motor protection function ..... Locked rotor burnout protection, Reverse polarity protection For details, please refer to p. 608.
- Dielectric strength ..... 50/60 Hz, 500 VAC, for 1 minute (between lead wire conductors and frame)
- Insulation resistance ..... 10 MΩ min. at 500 VDC (between lead wire conductors and frame)
- Sound pressure level (SPL) ..... A-weighted sound pressure level (SPL) at 1 m away from the air inlet.
- Storage temperature ..... -30 to +70˚C (Non-condensing)
- Lead wire ..... ⊕Red ⊖Black Sensor Yellow
- Mass ..... 50 g
- Ingress protection ..... IP68 For more information on IP rating, refer to p. 617.

Specifications

The models listed below **have ribs and a pulse sensor.**

Model no.	Rated voltage [V]	Operating voltage range [V]	Rated current [A]	Rated input [W]	Rated speed [min⁻¹]	Max. airflow [m³/min]	Max. airflow [CFM]	Max. static pressure [Pa]	Max. static pressure [inchH₂O]	SPL [dB (A)]	Operating temperature [˚C]	Expected life [h]
9WP0412H6001	12	7 to 13.8	0.1	1.2	8000	0.225	8.0	65.7	0.264	33	-10 to +60	40000/60˚C (70000/40˚C)
9WP0412F6001			0.06	0.72	6500	0.183	6.5	45.1	0.181	28		

Note: Sensor and control options are available for selection. Refer to the table on p. 652.

Airflow - Static Pressure Characteristics

9WP0412H6001 With pulse sensor

Operating voltage range

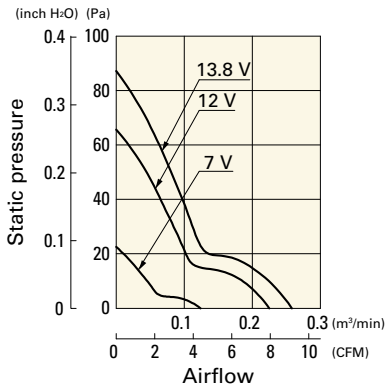

9WP0412F6001 With pulse sensor

Operating voltage range

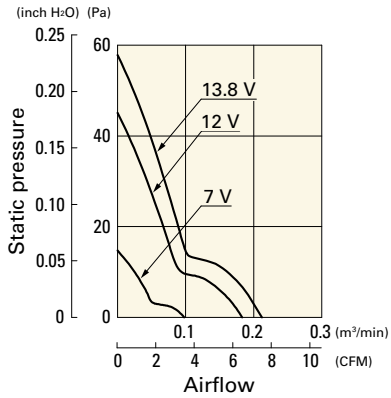

Dimensions (unit: mm)

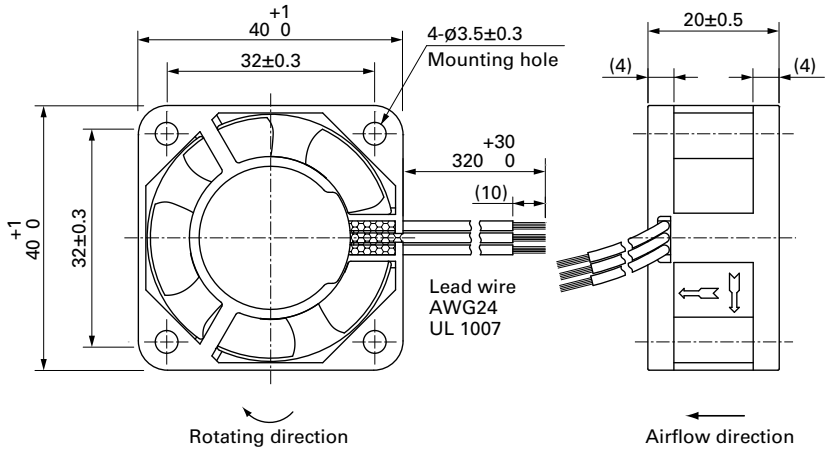

Reference Dimensions of Mounting Holes and Vent Opening (unit: mm)

Inlet side, Outlet side

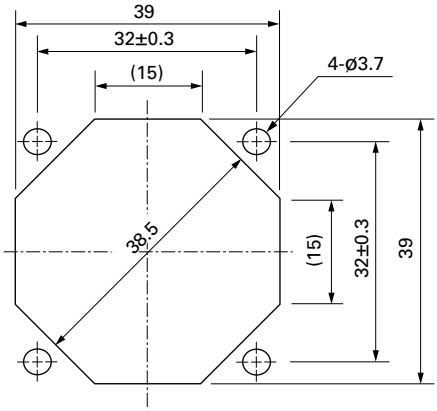

Options

Finger guards page: p. 590

Model no.: 109-059, 109-059H

40×40×28 mm

San Ace 40W 9WPA type

IP68

General Specifications

- Material ..... Frame: Plastic (Flammability: UL 94V-0), Impeller: Plastic (Flammability: UL 94V-0)
- Expected life ..... See the table below. (L10 life: 90% survival rate for continuous operation in indoor free air at 60°C, rated voltage) Expected life at 40°C is for reference only.
- Motor protection function ..... Locked rotor burnout protection, Reverse polarity protection For details, please refer to p. 608.
- Dielectric strength ..... 50/60 Hz, 500 VAC, for 1 minute (between lead wire conductors and frame)
- Insulation resistance ..... 10 MΩ min. at 500 VDC (between lead wire conductors and frame)
- Sound pressure level (SPL) ..... A-weighted sound pressure level (SPL) at 1 m away from the air inlet.
- Storage temperature ..... -30 to +70°C (Non-condensing)
- Lead wire ..... ⊕Red ⊖Black Sensor Yellow Control Brown (For models without PWM control, there is no speed control wiring.)
- Mass ..... 60 g
- Ingress protection ..... IP68 For more information on IP rating, refer to p. 617.

Specifications

The models listed below **have ribs and a pulse sensor with PWM control.** For models without ribs, append "1" to the end of model numbers.

Model no.	Rated voltage [V]	Operating voltage range [V]	PWM duty cycle* [%]	Rated current [A]	Rated input [W]	Rated speed [min⁻¹]	Max. airflow [m³/min]	Max. airflow [CFM]	Max. static pressure [Pa]	Max. static pressure [inchH₂O]	SPL [dB (A)]	Operating temperature [°C]	Expected life [h]
9WPA0412P3G001	12	10.8 to 13.2	100	0.50	6.0	22200	0.63	22.2	555	2.22	53	-20 to +70	40000/60°C (70000/40°C)
			20	0.06	0.72	5000	0.14	4.9	28.1	0.11	21		
9WPA0424P3G001	24	21.6 to 26.4	100	0.25	6.0	22200	0.63	22.2	555	2.22	53		
			20	0.06	1.44	9200	0.26	9.1	95	0.38	34		

PWM frequency is 25 kHz. Models without ratings for 0% PWM duty cycle have zero speed at 0%. When control terminal is open, speed is the same as at 100% duty cycle.

The models listed below **have ribs and a pulse sensor.** For models without ribs, append "1" to the end of model numbers.

Model no.	Rated voltage [V]	Operating voltage range [V]	Rated current [A]	Rated input [W]	Rated speed [min⁻¹]	Max. airflow [m³/min]	Max. airflow [CFM]	Max. static pressure [Pa]	Max. static pressure [inchH₂O]	SPL [dB (A)]	Operating temperature [°C]	Expected life [h]
9WPA0412H3001	12	7 to 13.8	0.34	4.1	18500	0.52	18.3	375	1.51	48	-20 to +70	40000/60°C (70000/40°C)
9WPA0424H3001	24	14 to 27.6	0.17	4.1	18500	0.52	18.3	375	1.51	48		

Note 1: Sensor and control options are available for selection. Refer to the table on p. 652.
Note 2: The mark indicates Short LeadTime Service applicable models. See p. 664 for details.

Airflow - Static Pressure Characteristics / PWM Duty - Speed Characteristics Example

9WPA0412P3G001 With pulse sensor with PWM control

PWM duty cycle

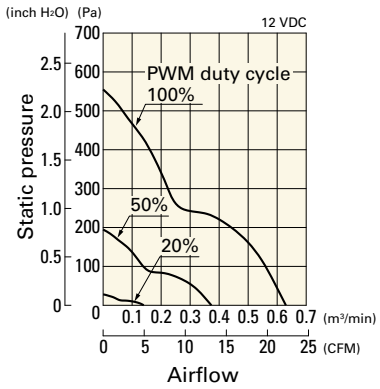

Operating voltage range

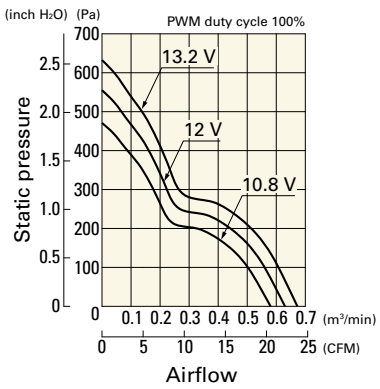

PWM duty - Speed characteristics example

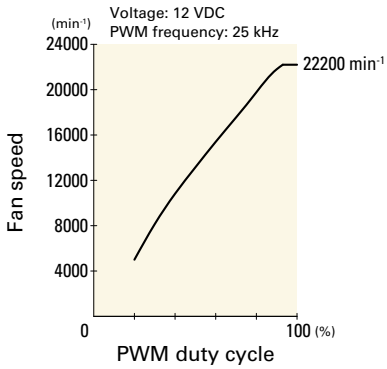

Airflow - Static Pressure Characteristics / PWM Duty - Speed Characteristics Example

9WPA0424P3G001 With pulse sensor with PWM control

PWM duty cycle

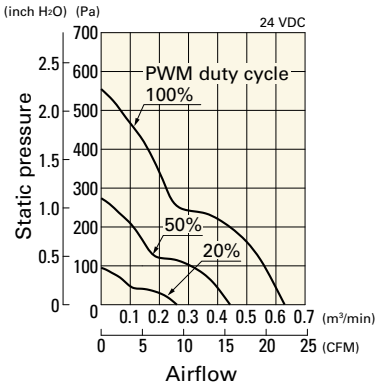

Operating voltage range

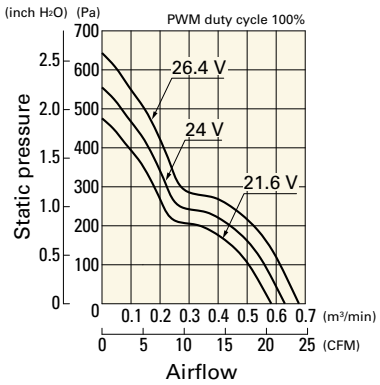

PWM duty - Speed characteristics example

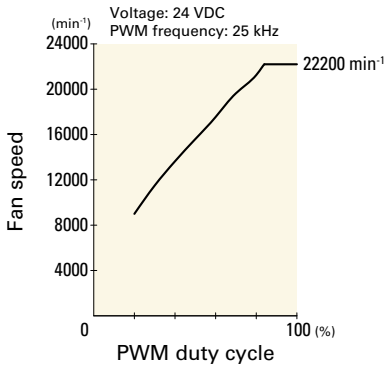

Airflow - Static Pressure Characteristics

9WPA0412H3001 With pulse sensor

Operating voltage range

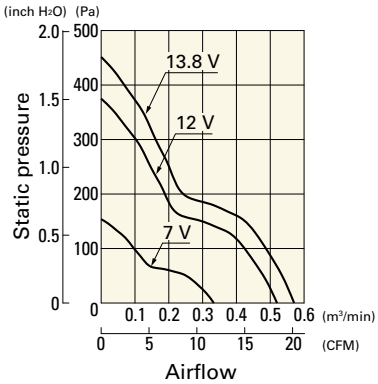

9WPA0424H3001 With pulse sensor

Operating voltage range

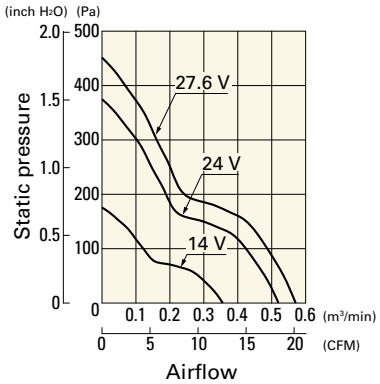

Dimensions (unit: mm) (Ribbed frame with pulse sensor with PWM control)

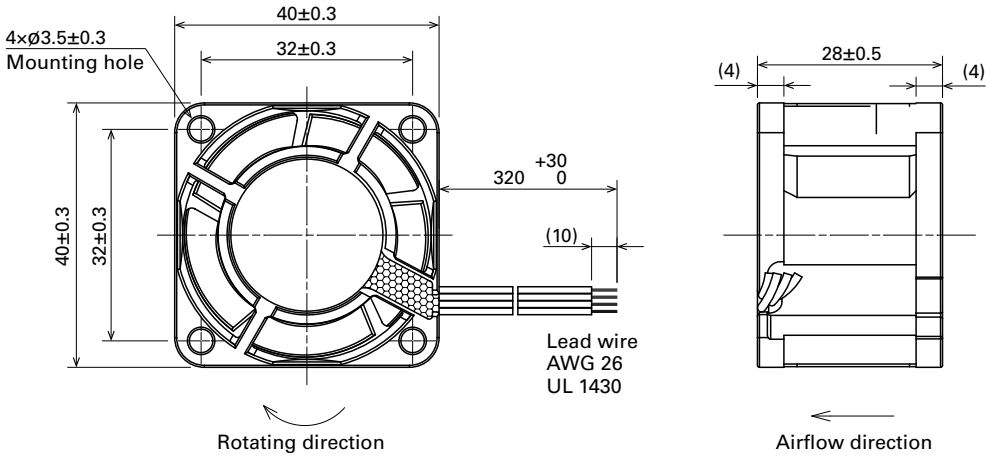

Reference Dimensions of Mounting Holes and Vent Opening (unit: mm)

Inlet side, Outlet side

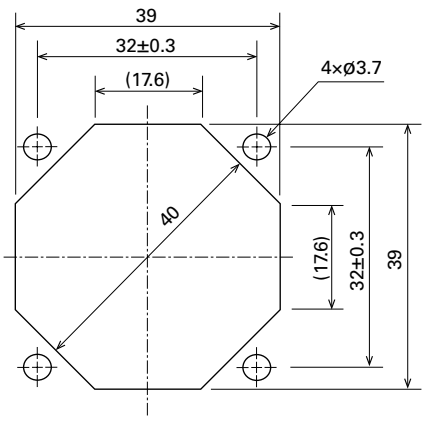

Options

Finger guards page: p. 590

Model no.: 109-059, 109-059H

Errata sheet

40×40×28 mm

San Ace 40W 9WL type

IP68

General Specifications

- Material ..... Frame: Aluminum (Black coating), Impeller: Plastic (Flammability: UL 94V-0)
- Expected life ..... See the table below. (L10 life: 90% survival rate for continuous operation in indoor free air at 60°C, rated voltage) Expected life at 40°C is for reference only.
- Motor protection function ..... Locked rotor burnout protection, Reverse polarity protection For details, please refer to p. 608.
- Dielectric strength ..... 50/60 Hz, 500 VAC, for 1 minute (between lead wire conductors and frame)
- Insulation resistance ..... 10 MΩ min. at 500 VDC (between lead wire conductors and frame)
- Sound pressure level (SPL) ..... A-weighted sound pressure level (SPL) at 1 m away from the air inlet.
- Storage temperature ..... -30 to +70°C (Non-condensing)
- Lead wire ..... ⊕Red ⊖Black Sensor Yellow Control Brown
- Mass ..... 70 g
- Ingress protection ..... IP68 For more information on IP rating, refer to p. 617.

Specifications

The models listed below **have ribs and a pulse sensor with PWM control.**

Model no.	Rated voltage [V]	Operating voltage range [V]	PWM duty cycle* [%]	Rated current [A]	Rated input [W]	Rated speed [min⁻¹]	Max. airflow [m³/min]	Max. airflow [CFM]	Max. static pressure [Pa]	Max. static pressure [inchH₂O]	SPL [dB (A)]	Operating temperature [°C]	Expected life [h]
9WL0412P3J001	12	10.8 to 13.2	100	0.52	6.24	17500	0.63	22.2	400	1.61	51	-20 to +70	150000/60°C (185000/40°C)
			20	0.06	0.72	3600	0.13	4.6	16.9	0.07	20		
9WL0412P3G001			100	0.4	4.8	15500	0.56	19.7	310	1.24	47		
			20	0.06	0.72	3300	0.12	4.2	14.0	0.06	18		
9WL0424P3J001	24	21.6 to 26.4	100	0.26	6.24	17500	0.63	22.2	400	1.61	51		
			20	0.04	0.96	4000	0.14	5.1	20.9	0.08	22		
9WL0424P3G001			100	0.2	4.8	15500	0.56	19.7	310	1.24	47		
			20	0.04	0.96	3000	0.11	3.8	11.6	0.05	16		

PWM frequency is 25 kHz. Models without ratings for 0% PWM duty cycle have zero speed at 0%. When control terminal is open, speed is the same as at 100% duty cycle.

Note 1: Sensor and control options are available for selection. Refer to the table on pp. 650 to 651.
Note 2: The » mark indicates Short LeadTime Service applicable models. See p. 664 for details.

Airflow - Static Pressure Characteristics / PWM Duty - Speed Characteristics Example

9WL0412P3J001 With pulse sensor with PWM control

PWM duty cycle

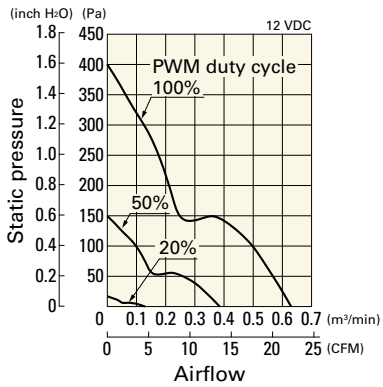

Operating voltage range

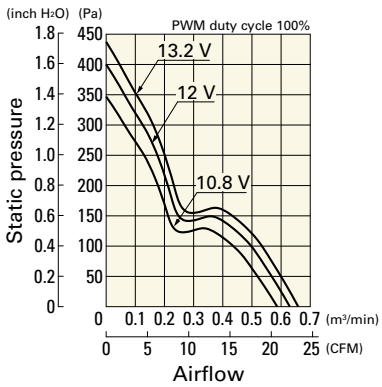

PWM duty - Speed characteristics example

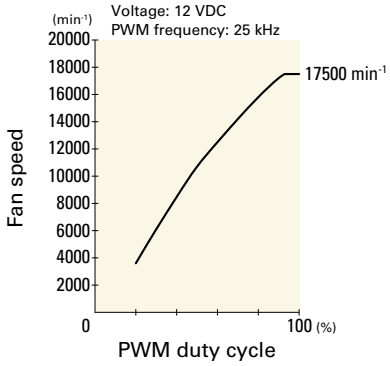

Airflow - Static Pressure Characteristics / PWM Duty - Speed Characteristics Example

9WL0412P3G001 With pulse sensor with PWM control

PWM duty cycle

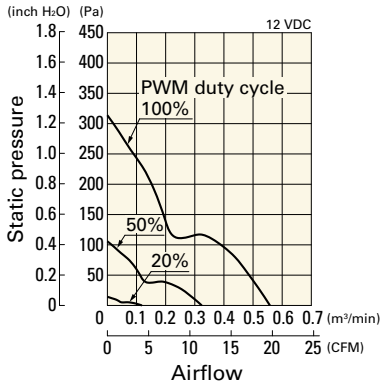

Operating voltage range

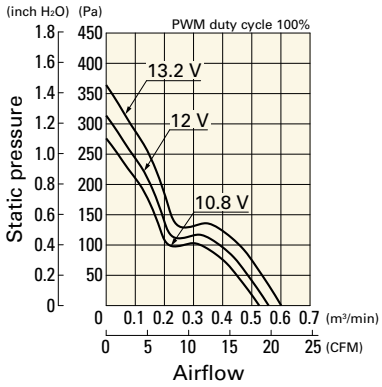

PWM duty - Speed characteristics example

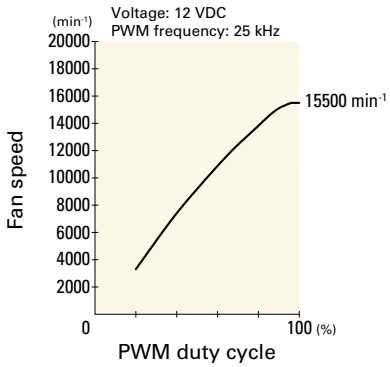

9WL0424P3J001 With pulse sensor with PWM control

PWM duty cycle

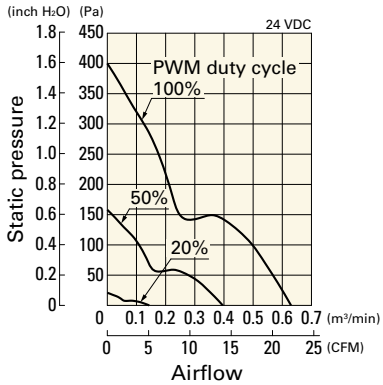

Operating voltage range

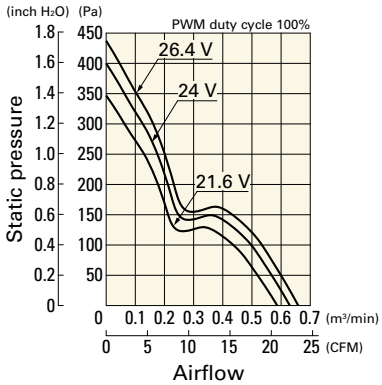

PWM duty - Speed characteristics example

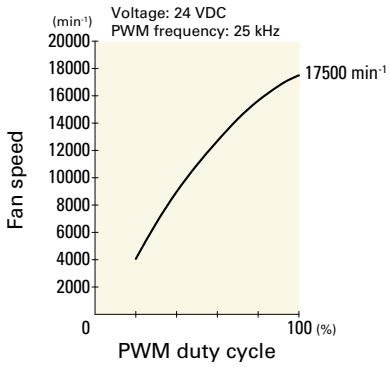

9WL0424P3G001 With pulse sensor with PWM control

PWM duty cycle

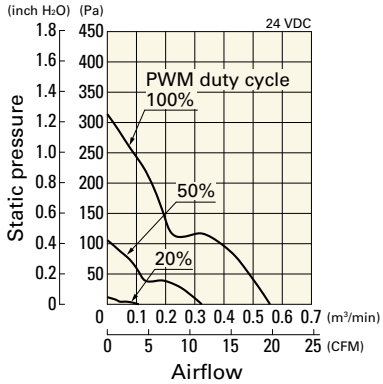

Operating voltage range

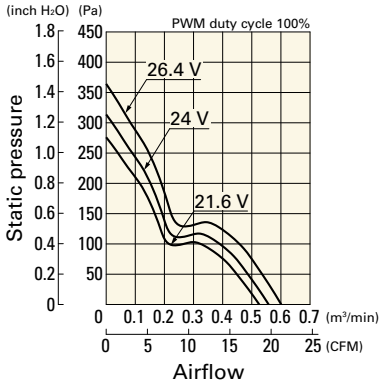

PWM duty - Speed characteristics example

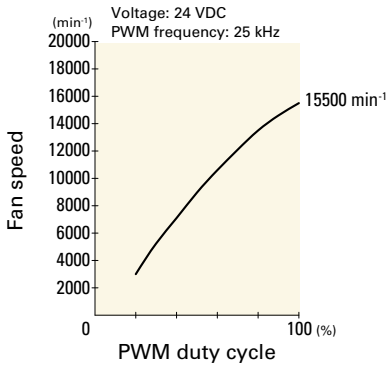

Dimensions (unit: mm)

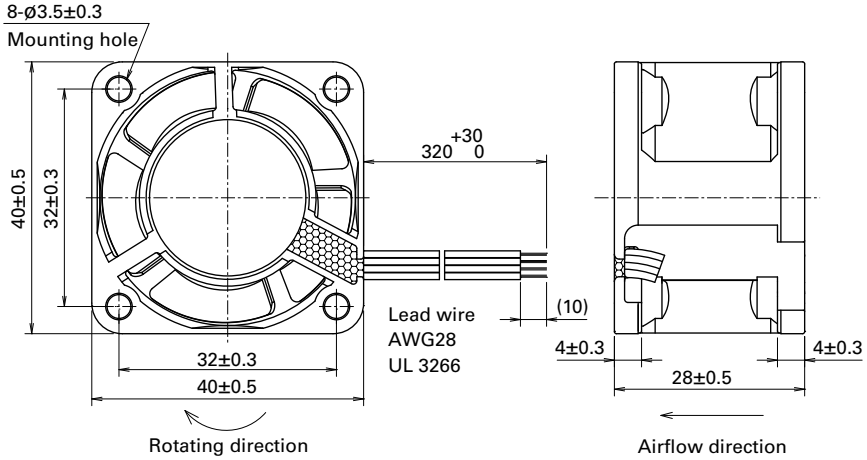

Reference Dimensions of Mounting Holes and Vent Opening (unit: mm)

Inlet side, Outlet side

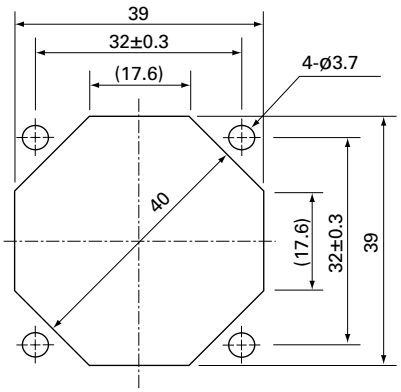

Options

Finger guards page: p. 590

Model no.: 109-059, 109-059H

60×60×25 mm

San Ace 60W 9WPA type

IP68

General Specifications

- Material ..... Frame: Plastic (Flammability: UL 94V-0), Impeller: Plastic (Flammability: UL 94V-1)
- Expected life ..... See the table below. (L10 life: 90% survival rate for continuous operation in indoor free air at 60°C, rated voltage) Expected life at 40°C is for reference only.
- Motor protection function ..... Locked rotor burnout protection, Reverse polarity protection For details, please refer to p. 608.
- Dielectric strength ..... 50/60 Hz, 500 VAC, for 1 minute (between lead wire conductors and frame)
- Insulation resistance ..... 10 MΩ min. at 500 VDC (between lead wire conductors and frame)
- Sound pressure level (SPL) ..... A-weighted sound pressure level (SPL) at 1 m away from the air inlet.
- Storage temperature ..... -30 to +70°C (Non-condensing)
- Lead wire ..... ⊕Red ⊖Black Sensor Yellow Control Brown (For models without PWM control, there is no speed control wiring.)
- Mass ..... 110 g
- Ingress protection ..... IP68 For more information on IP rating, refer to p. 617.

Specifications

The models listed below **have ribs and a pulse sensor with PWM control.** For models without ribs, append "1" to the end of model numbers.

Model no.	Rated voltage [V]	Operating voltage range [V]	PWM duty cycle* [%]	Rated current [A]	Rated input [W]	Rated speed [min⁻¹]	Max. airflow [m³/min]	Max. airflow [CFM]	Max. static pressure [Pa]	Max. static pressure [inchH₂O]	SPL [dB (A)]	Operating temperature [°C]	Expected life [h]
9WPA0612P4G001	12	10.8 to 13.2	100	0.93	11.16	12000	1.52	53.7	357	1.44	56	-20 to +70	40000/60°C (70000/40°C)
			20	0.09	1.08	3500	0.43	15.1	30	0.12	22		
9WPA0612P4H001		10.2 to 13.8	100	0.17	2.04	5800	0.73	25.8	83	0.33	36		
			20	0.04	0.48	1600	0.2	7	6.3	0.02	10		
9WPA0624P4G001	24	21.6 to 26.4	100	0.46	11.04	12000	1.52	53.7	357	1.44	56		
			20	0.05	1.2	3500	0.43	15.1	30	0.12	22		

PWM frequency is 25 kHz. Models without ratings for 0% PWM duty cycle have zero speed at 0%. When control terminal is open, speed is the same as at 100% duty cycle.

The models listed below **have ribs and a pulse sensor.** For models without ribs, append "1" to the end of model numbers.

Model no.	Rated voltage [V]	Operating voltage range [V]	Rated current [A]	Rated input [W]	Rated speed [min⁻¹]	Max. airflow [m³/min]	Max. airflow [CFM]	Max. static pressure [Pa]	Max. static pressure [inchH₂O]	SPL [dB (A)]	Operating temperature [°C]	Expected life [h]
9WPA0612M4001	12	10.2 to 13.8	0.11	1.32	4000	0.51	18	39.7	0.16	26	-20 to +70	40000/60°C (70000/40°C)
9WPA0624S4001	24	21.6 to 26.4	0.17	4.08	7800	0.99	35	151	0.6	43		
9WPA0624M4001		20.4 to 27.6	0.06	1.44	4000	0.51	18	39.7	0.16	26		

Note 1: Sensor and control options are available for selection. Refer to the table on p. 652.
Note 2: The » mark indicates Short LeadTime Service applicable models. See p. 664 for details.

Airflow - Static Pressure Characteristics / PWM Duty - Speed Characteristics Example

9WPA0612P4G001 With pulse sensor with PWM control

PWM duty cycle

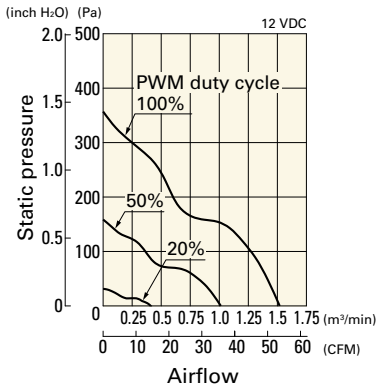

Operating voltage range

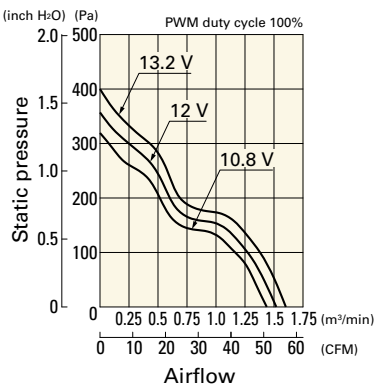

PWM duty - Speed characteristics example

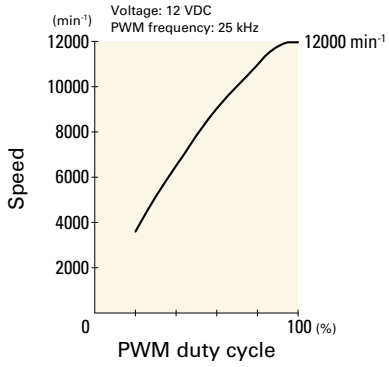

Airflow - Static Pressure Characteristics / PWM Duty - Speed Characteristics Example

9WPA0612P4H001 With pulse sensor with PWM control

PWM duty cycle

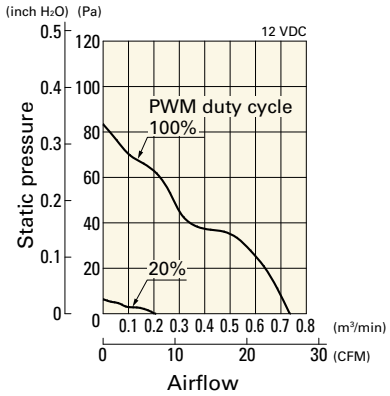

Operating voltage range

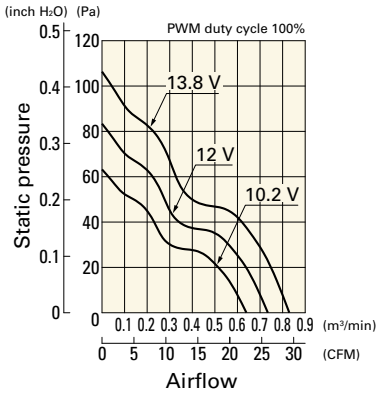

PWM duty - Speed characteristics example

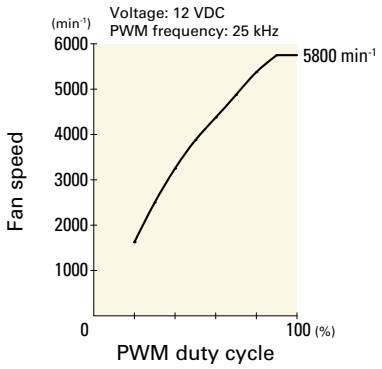

9WPA0624P4G001 With pulse sensor with PWM control

PWM duty cycle

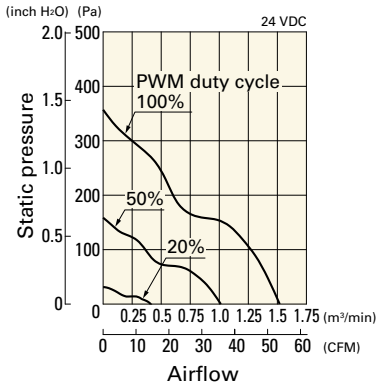

Operating voltage range

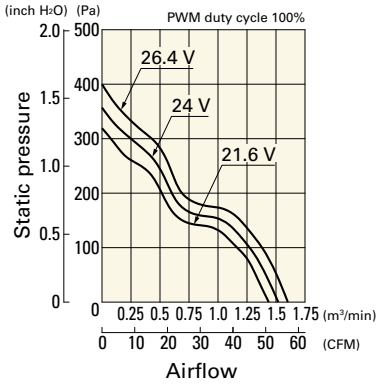

PWM duty - Speed characteristics example

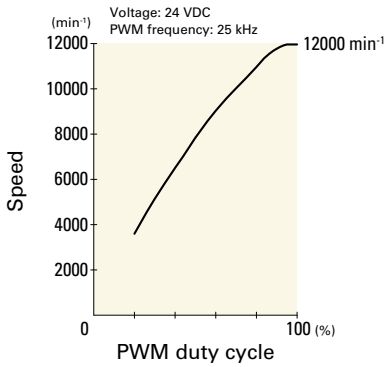

Airflow - Static Pressure Characteristics

9WPA0612M4001 With pulse sensor

Operating voltage range

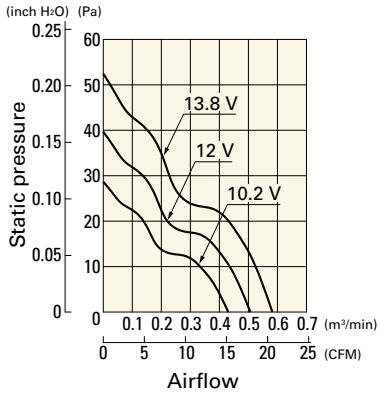

9WPA0624S4001 With pulse sensor

Operating voltage range

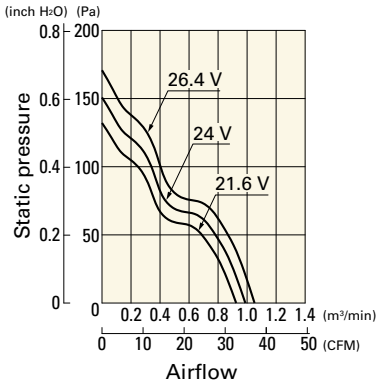

9WPA0624M4001 With pulse sensor

Operating voltage range

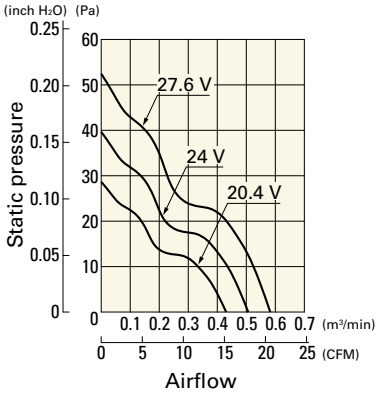

Dimensions (unit: mm) (Ribbed frame with pulse sensor with PWM control)

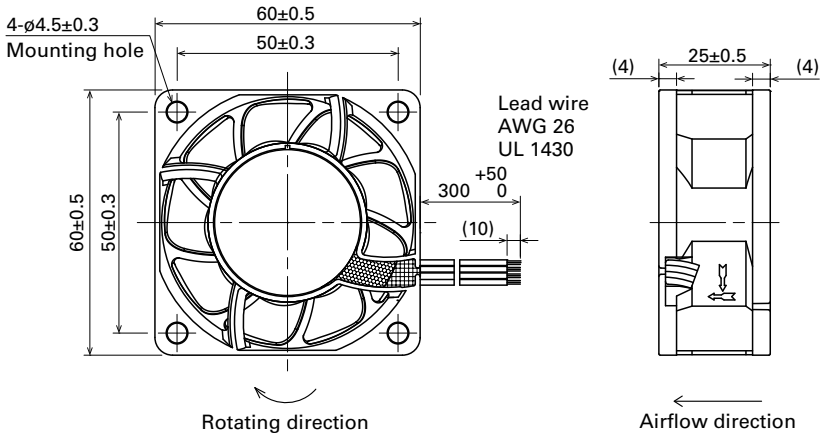

Reference Dimensions of Mounting Holes and Vent Opening (unit: mm)

Inlet side, Outlet side

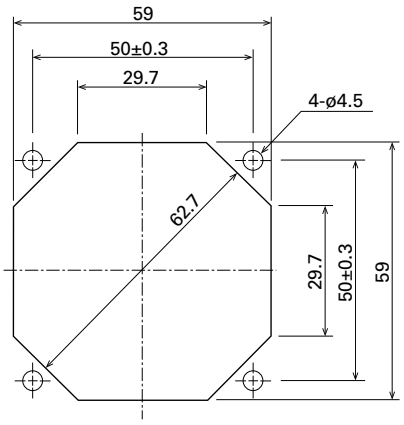

Options

Finger guards	page: p. 590
Model no.: 109-139E, 109-139H	

Resin finger guards	page: p. 597
Model no.: 109-1003G	

Errata sheet

60×60×25 mm

San Ace 60W 9WL type

IP68

General Specifications

- Material ..... Frame: Aluminum (Black coating), Impeller: Plastic (Flammability: UL 94V-1)
- Expected life ..... See the table below. (L10 life: 90% survival rate for continuous operation in indoor free air at 60°C, rated voltage) Expected life at 40°C is for reference only.
- Motor protection function ..... Locked rotor burnout protection, Reverse polarity protection For details, please refer to p. 608.
- Dielectric strength ..... 50/60 Hz, 500 VAC, for 1 minute (between lead wire conductors and frame)
- Insulation resistance ..... 10 MΩ min. at 500 VDC (between lead wire conductors and frame)
- Sound pressure level (SPL) ..... A-weighted sound pressure level (SPL) at 1 m away from the air inlet.
- Storage temperature ..... -30 to +70°C (Non-condensing)
- Lead wire ..... ⊕Red ⊖Black Sensor Yellow Control Brown
- Mass ..... 120 g
- Ingress protection ..... IP68 For more information on IP rating, refer to p. 617.

Specifications

The models listed below **have ribs and a pulse sensor with PWM control.**

Model no.	Rated voltage [V]	Operating voltage range [V]	PWM duty cycle* [%]	Rated current [A]	Rated input [W]	Rated speed [min⁻¹]	Max. airflow [m³/min]	Max. airflow [CFM]	Max. static pressure [Pa]	Max. static pressure [inchH₂O]	SPL [dB (A)]	Operating temperature [°C]	Expected life [h]
9WL0612P4S001	12	10.8 to 13.2	100	0.67	8.04	11000	1.4	49.4	300	1.204	53	-20 to +70	180000/60°C (215000/40°C)
			20	0.06	0.72	2900	0.36	12.7	20.8	0.083	20		
9WL0612P4J001			100	0.39	4.68	8650	1.1	38.8	182	0.73	47		
			25	0.04	0.48	2100	0.27	9.5	10.7	0.043	17		
9WL0612P4H001			100	0.17	2.04	6150	0.78	27.5	97	0.389	36		
			25	0.03	0.36	1350	0.17	6.0	4.7	0.018	14		
9WL0624P4S001	24	21.6 to 26.4	100	0.34	8.16	11000	1.4	49.4	300	1.204	53		
			20	0.03	0.72	2900	0.36	12.7	20.8	0.083	20		
9WL0624P4J001			100	0.19	4.56	8650	1.1	38.8	182	0.73	47		
			20	0.02	0.48	2200	0.28	9.8	12.0	0.048	17		
9WL0624P4H001			100	0.08	1.92	6150	0.78	27.5	97	0.389	36		
			20	0.02	0.48	1300	0.16	5.6	4.3	0.017	14		

PWM frequency is 25 kHz. Models without ratings for 0% PWM duty cycle have zero speed at 0%. When control terminal is open, speed is the same as at 100% duty cycle.

Note 1: Sensor and control options are available for selection. Refer to the table on p. 651.
Note 2: The mark indicates Short Lead Time Service applicable models. See p. 664 for details.

Airflow - Static Pressure Characteristics / PWM Duty - Speed Characteristics Example

9WL0612P4S001 With pulse sensor with PWM control

PWM duty cycle

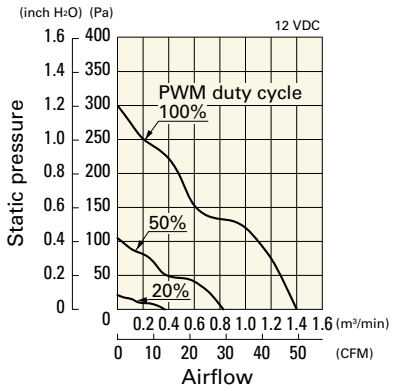

Operating voltage range

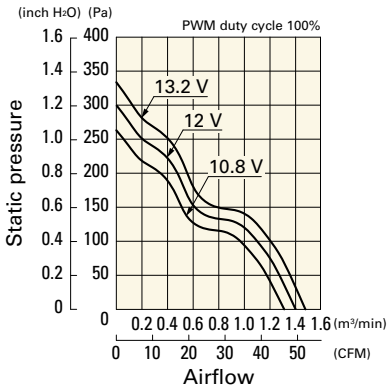

PWM duty - Speed characteristics example

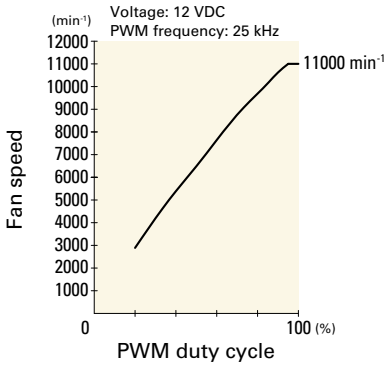

Airflow - Static Pressure Characteristics / PWM Duty - Speed Characteristics Example

9WL0612P4J001 With pulse sensor with PWM control

PWM duty cycle

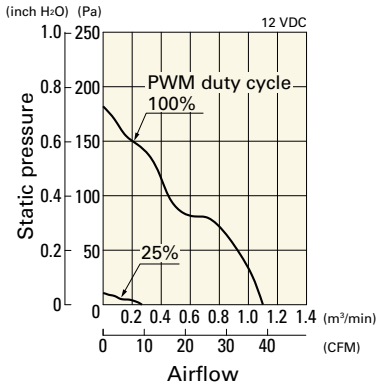

Operating voltage range

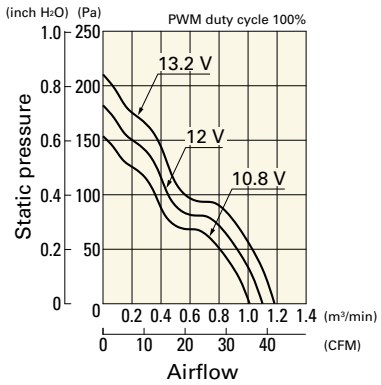

PWM duty - Speed characteristics example

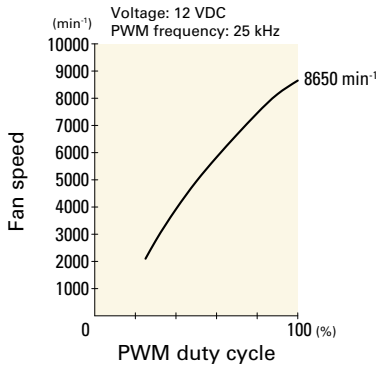

9WL0612P4H001 With pulse sensor with PWM control

PWM duty cycle

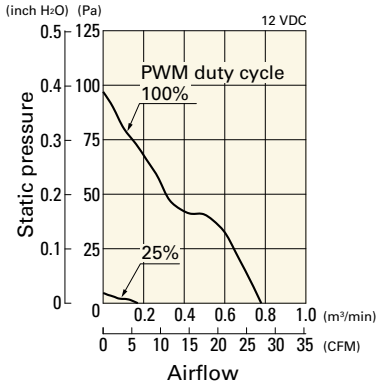

Operating voltage range

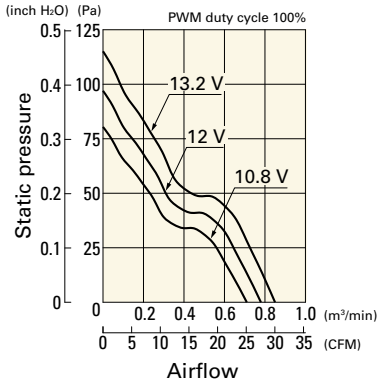

PWM duty - Speed characteristics example

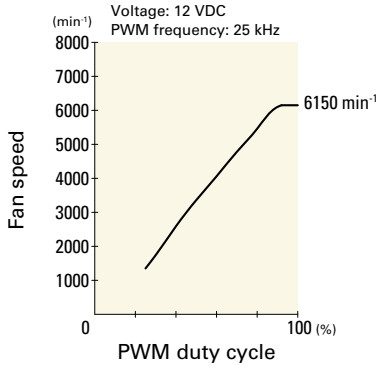

9WL0624P4S001 With pulse sensor with PWM control

PWM duty cycle

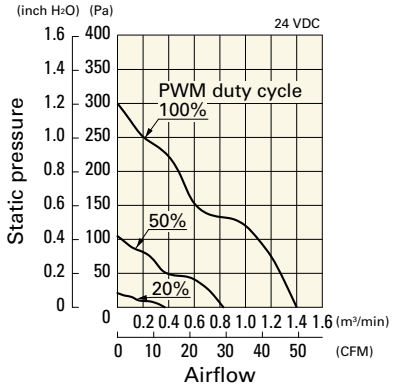

Operating voltage range

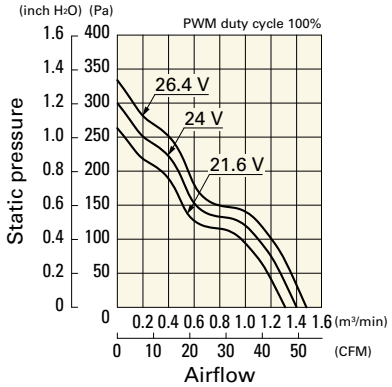

PWM duty - Speed characteristics example

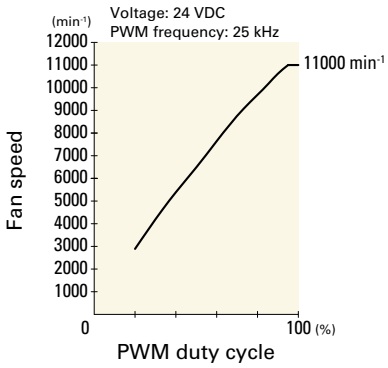

9WL0624P4J001 With pulse sensor with PWM control

PWM duty cycle

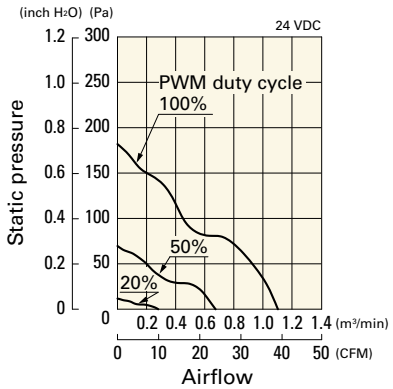

Operating voltage range

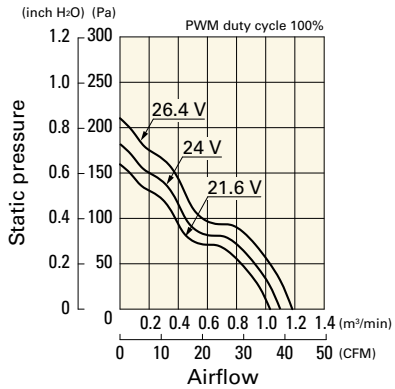

PWM duty - Speed characteristics example

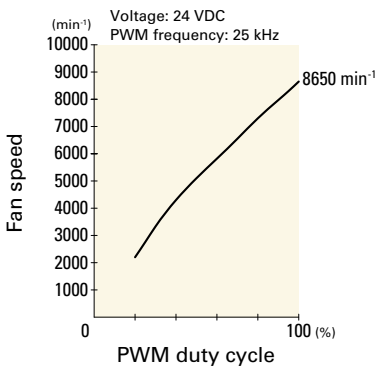

Airflow - Static Pressure Characteristics / PWM Duty - Speed Characteristics Example

9WL0624P4H001 With pulse sensor with PWM control

PWM duty cycle

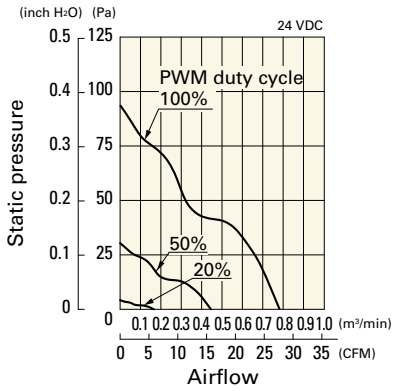

Operating voltage range

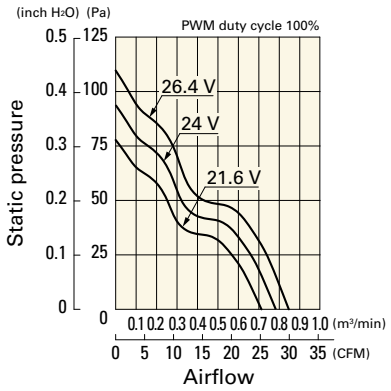

PWM duty - Speed characteristics example

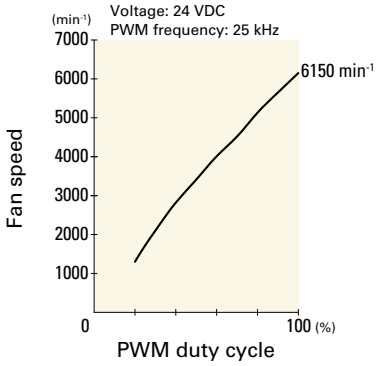

Dimensions (unit: mm)

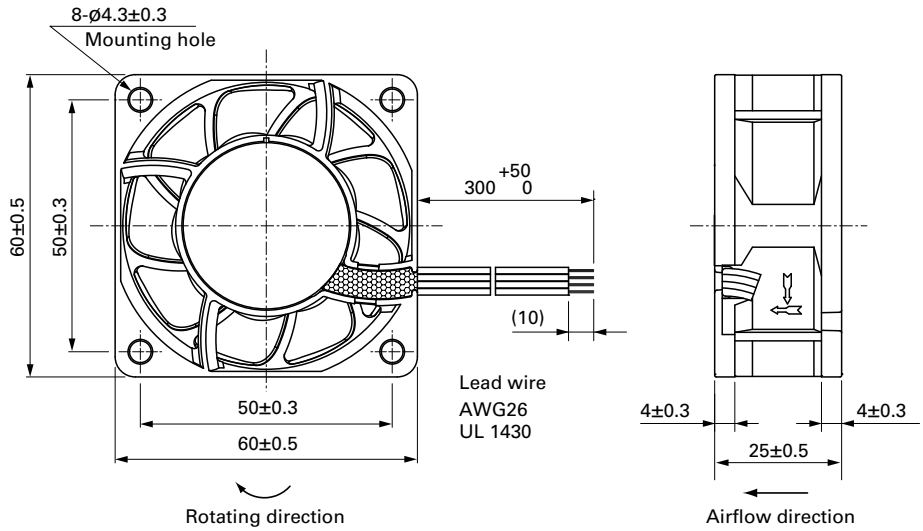

Reference Dimensions of Mounting Holes and Vent Opening (unit: mm)

Inlet side, Outlet side

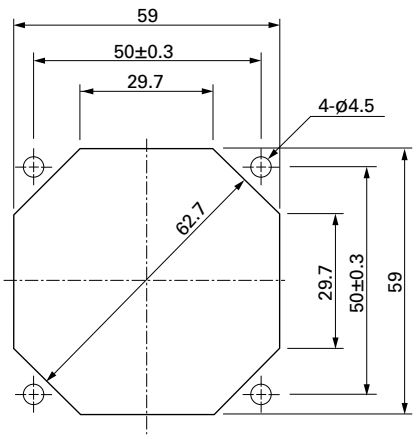

Options

Finger guards	page: p. 590
Model no.: 109-139E, 109-139H	

Resin finger guards	page: p. 597
Model no.: 109-1003G	

80×80×25 mm

San Ace 80W 9WPA type

IP68

General Specifications

- Material ..... Frame: Plastic (Flammability: UL 94V-0), Impeller: Plastic (Flammability: UL 94V-1)
- Expected life ..... See the table below. (L10 life: 90% survival rate for continuous operation in indoor free air at 60°C, rated voltage) Expected life at 40°C is for reference only.
- Motor protection function ..... Locked rotor burnout protection, Reverse polarity protection For details, please refer to p. 608.
- Dielectric strength ..... 50/60 Hz, 500 VAC, for 1 minute (between lead wire conductors and frame)
- Insulation resistance ..... 10 MΩ min. at 500 VDC (between lead wire conductors and frame)
- Sound pressure level (SPL) ..... A-weighted sound pressure level (SPL) at 1 m away from the air inlet.
- Storage temperature ..... -30 to +70˚C (Non-condensing)
- Lead wire ..... ⊕Red ⊖Black Sensor Yellow Control Brown (For models without PWM control, there is no speed control wiring.)
- Mass ..... 130 g
- Ingress protection ..... IP68 For more information on IP rating, refer to p. 617.

Specifications

The models listed below **have ribs and a pulse sensor with PWM control.** For models without ribs, append "1" to the end of model numbers.

Model no.	Rated voltage [V]	Operating voltage range [V]	PWM duty cycle* [%]	Rated current [A]	Rated input [W]	Rated speed [min⁻¹]	Max. airflow [m³/min]	Max. airflow [CFM]	Max. static pressure [Pa]	Max. static pressure [inchH₂O]	SPL [dB (A)]	Operating temperature [˚C]	Expected life [h]
9WPA0812P4G001	12	10.8 to 13.2	100	0.71	8.52	8250	2.32	81.9	210	0.84	54	-20 to +70	40000/60˚C (70000/40˚C)
			20	0.07	0.84	2400	0.67	23.6	18.2	0.073	21		
9WPA0812P4S001			100	0.26	3.12	5300	1.49	52.6	86.7	0.35	40		
			20	0.04	0.48	1250	0.35	12.4	4.8	0.019	10		
9WPA0824P4G001	24	21.6 to 26.4	100	0.36	8.64	8250	2.32	81.9	210	0.84	54		
			20	0.05	1.2	2400	0.67	23.6	18.2	0.073	21		

PWM frequency is 25 kHz. Models without ratings for 0% PWM duty cycle have zero speed at 0%. When control terminal is open, speed is the same as at 100% duty cycle.

The models listed below **have ribs and a pulse sensor.** For models without ribs, append "1" to the end of model numbers.

Model no.	Rated voltage [V]	Operating voltage range [V]	Rated current [A]	Rated input [W]	Rated speed [min⁻¹]	Max. airflow [m³/min]	Max. airflow [CFM]	Max. static pressure [Pa]	Max. static pressure [inchH₂O]	SPL [dB (A)]	Operating temperature [˚C]	Expected life [h]
9WPA0824H4001	24	20.4 to 27.6	0.07	1.68	3500	0.98	34.6	37.8	0.15	29	-20 to +70	40000/60˚C (70000/40˚C)

Note 1: Sensor and control options are available for selection. Refer to the table on p. 652.
Note 2: The » mark indicates Short LeadTime Service applicable models. See p. 664 for details.

Airflow - Static Pressure Characteristics / PWM Duty - Speed Characteristics Example

9WPA0812P4G001 With pulse sensor with PWM control

PWM duty cycle

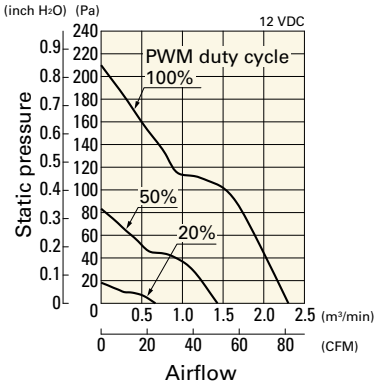

Operating voltage range

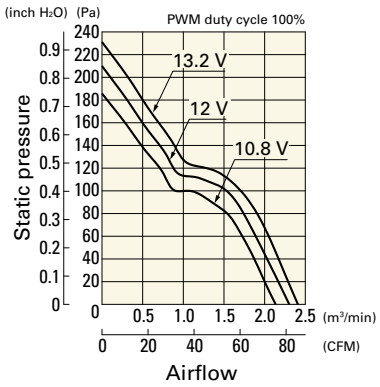

PWM duty - Speed characteristics example

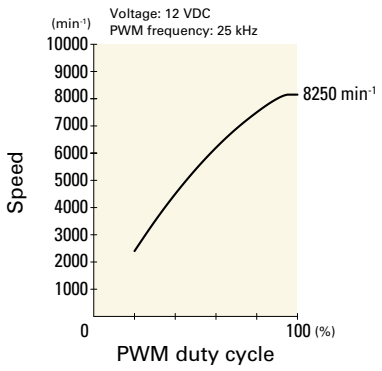

Airflow - Static Pressure Characteristics / PWM Duty - Speed Characteristics Example

9WPA0812P4S001 With pulse sensor with PWM control

PWM duty cycle

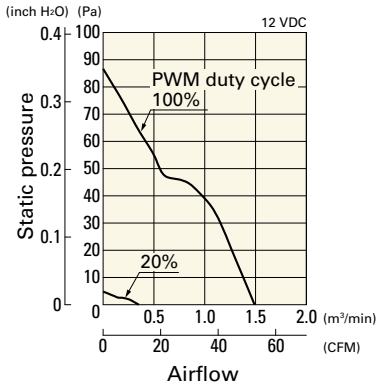

Operating voltage range

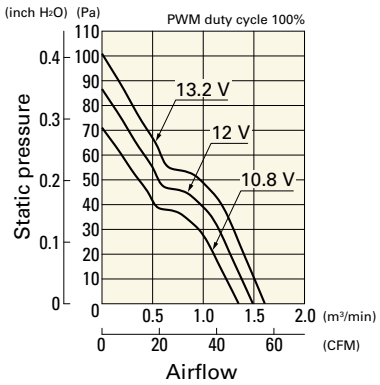

PWM duty - Speed characteristics example

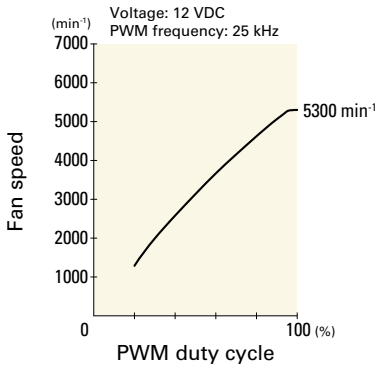

9WPA0824P4G001 With pulse sensor with PWM control

PWM duty cycle

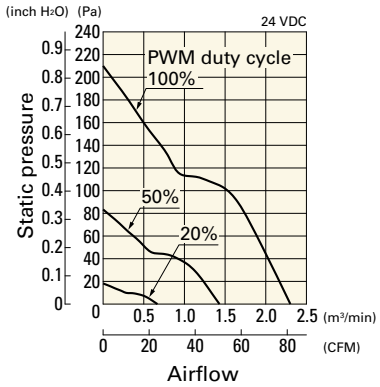

Operating voltage range

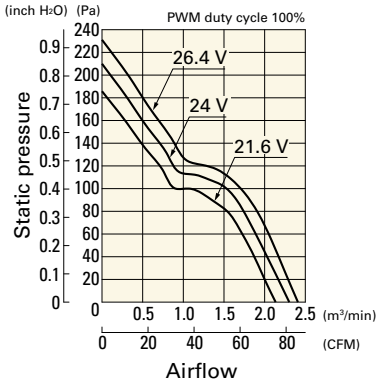

PWM duty - Speed characteristics example

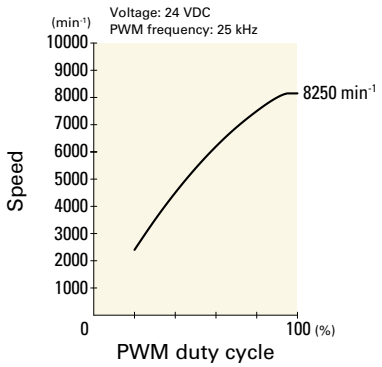

Airflow - Static Pressure Characteristics

9WPA0824H4001 With pulse sensor

Operating voltage range

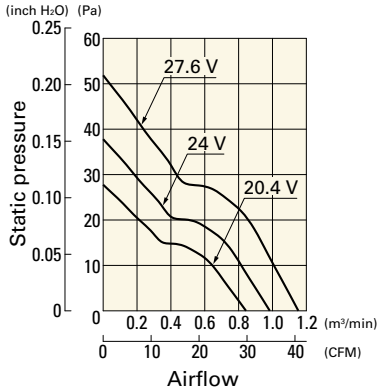

Dimensions (unit: mm) (Ribbed frame with pulse sensor with PWM control)

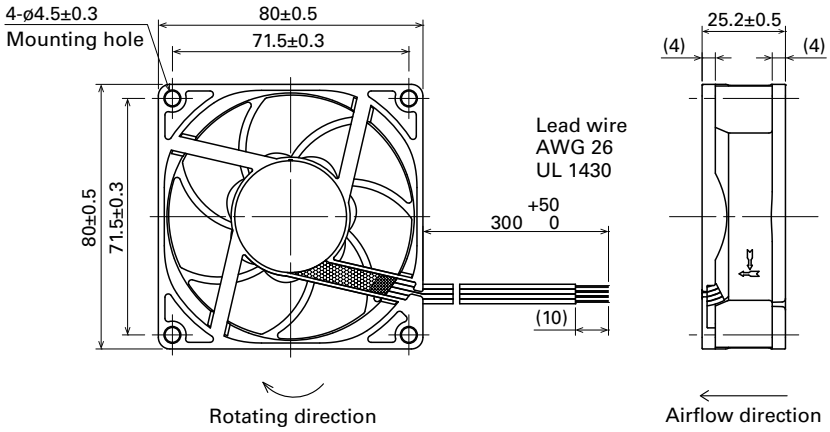

Reference Dimensions of Mounting Holes and Vent Opening (unit: mm)

Inlet side, Outlet side

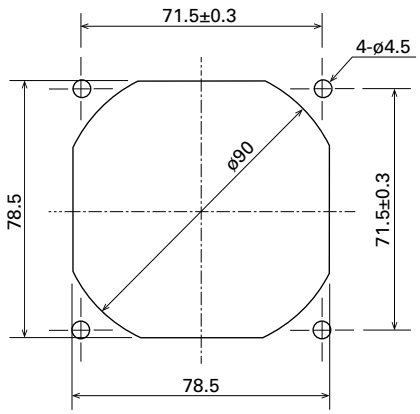

Options

Finger guards	page: p. 590
Model no.: 109-049E, 109-049H	

Resin finger guards	page: p. 597
Model no.: 109-1002G	

Errata sheet

80×80×25 mm

San Ace 80W 9WL type

IP68

General Specifications

- Material ..... Frame: Aluminum (Black coating), Impeller: Plastic (Flammability: UL 94V-1)
- Expected life ..... See the table below. (L10 life: 90% survival rate for continuous operation in indoor free air at 60°C, rated voltage) Expected life at 40°C is for reference only.
- Motor protection function ..... Locked rotor burnout protection, Reverse polarity protection For details, please refer to p. 608.
- Dielectric strength ..... 50/60 Hz, 500 VAC, for 1 minute (between lead wire conductors and frame)
- Insulation resistance ..... 10 MΩ min. at 500 VDC (between lead wire conductors and frame)
- Sound pressure level (SPL) ..... A-weighted sound pressure level (SPL) at 1 m away from the air inlet.
- Storage temperature ..... -30 to +70˚C (Non-condensing)
- Lead wire ..... ⊕Red ⊖Black Sensor Yellow Control Brown (For models without PWM control, there is no speed control wiring.)
- Mass ..... 150 g
- Ingress protection ..... IP68 For more information on IP rating, refer to p. 617.

Specifications

The models listed below **have ribs and a pulse sensor with PWM control.**

Model no.	Rated voltage [V]	Operating voltage range [V]	PWM duty cycle* [%]	Rated current [A]	Rated input [W]	Rated speed [min⁻¹]	Max. airflow [m³/min]	Max. airflow [CFM]	Max. static pressure [Pa]	Max. static pressure [inchH₂O]	SPL [dB (A)]	Operating temperature [˚C]	Expected life [h]
9WL0812P4J001	12	10.8 to 13.2	100	0.6	7.2	7400	2.07	73.0	177	0.71	49	-20 to +70	180000/60˚C (215000/40˚C)
			20	0.06	0.72	1800	0.5	17.6	10.4	0.04	16		
9WL0812P4G001			100	0.3	3.6	5500	1.54	54.3	98	0.39	43		
			25	0.05	0.6	1400	0.39	13.7	6.3	0.02	14		
9WL0812P4H001			100	0.12	1.44	3700	1.03	36.3	44	0.17	31		
			30	0.04	0.48	1100	0.3	10.5	3.9	0.01	13		
9WL0824P4J001	24	21.6 to 26.4	100	0.28	6.72	7400	2.07	73.0	177	0.71	49		
			20	0.05	1.2	2400	0.67	23.6	18.6	0.07	22		
9WL0824P4G001			100	0.14	3.36	5500	1.54	54.3	98	0.39	43		
			20	0.02	0.48	1200	0.33	11.6	4.6	0.01	13		
9WL0824P4H001			100	0.05	1.2	3700	1.03	36.3	44	0.17	31		
			30	0.02	0.48	1100	0.3	10.5	3.9	0.01	13		

PWM frequency is 25 kHz. Models without ratings for 0% PWM duty cycle have zero speed at 0%. When control terminal is open, speed is the same as at 100% duty cycle.

The models listed below **have ribs and a pulse sensor.**

Model no.	Rated voltage [V]	Operating voltage range [V]	Rated current [A]	Rated input [W]	Rated speed [min⁻¹]	Max. airflow [m³/min]	Max. airflow [CFM]	Max. static pressure [Pa]	Max. static pressure [inchH₂O]	SPL [dB (A)]	Operating temperature [˚C]	Expected life [h]
9WL0812L4001	12	8 to 13.2	0.06	0.72	2300	0.64	22.6	17	0.068	22	-20 to +70	180000/60˚C (215000/40˚C)
9WL0824F4001	24	12 to 26.4	0.045	1.08	3300	0.92	32.5	35	0.14	29		
9WL0824L4001		14 to 26.4	0.03	0.72	2300	0.64	22.6	17	0.068	22		

Note 1: Sensor and control options are available for selection. Refer to the table on p. 651.
Note 2: The » mark indicates Short LeadTime Service applicable models. See p. 664 for details.

Airflow - Static Pressure Characteristics / PWM Duty - Speed Characteristics Example

9WL0812P4J001 With pulse sensor with PWM control

PWM duty cycle

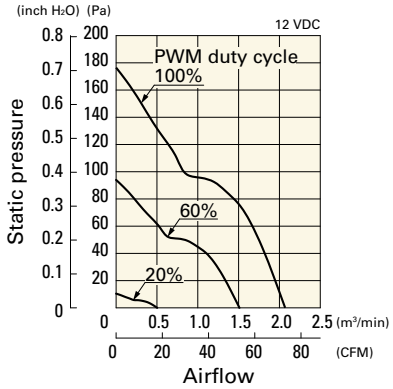

Operating voltage range

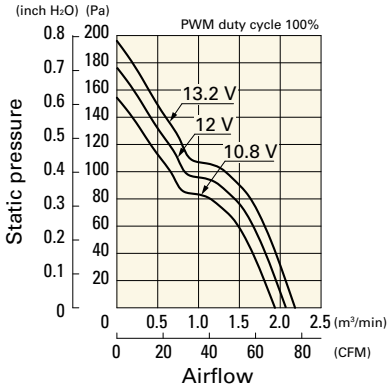

PWM duty - Speed characteristics example

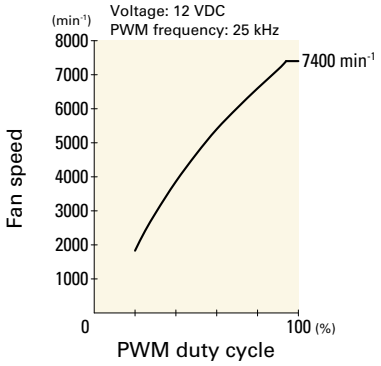

9WL0812P4G001 With pulse sensor with PWM control

PWM duty cycle

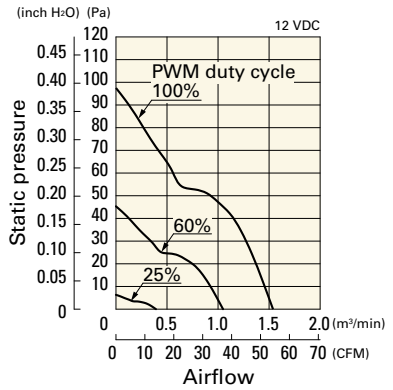

Operating voltage range

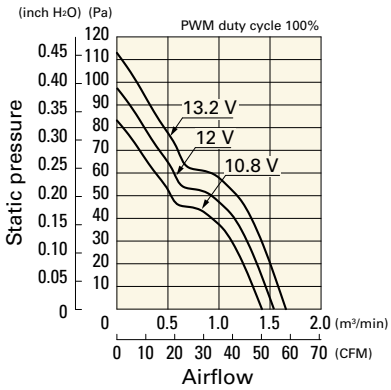

PWM duty - Speed characteristics example

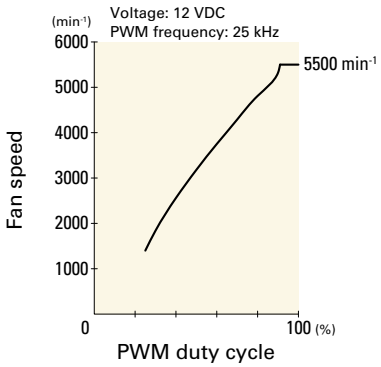

9WL0812P4H001 With pulse sensor with PWM control

PWM duty cycle

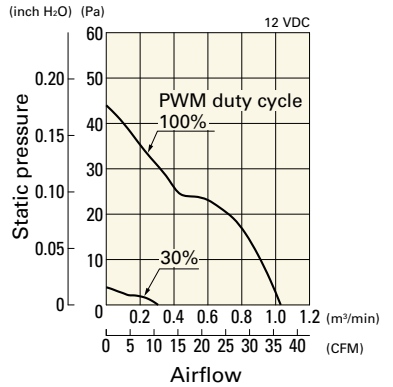

Operating voltage range

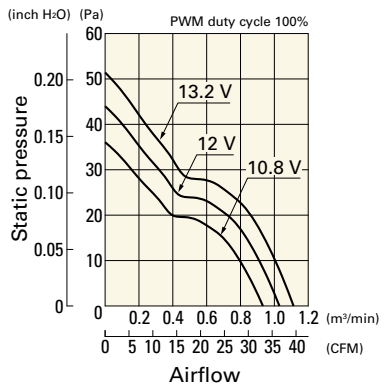

PWM duty - Speed characteristics example

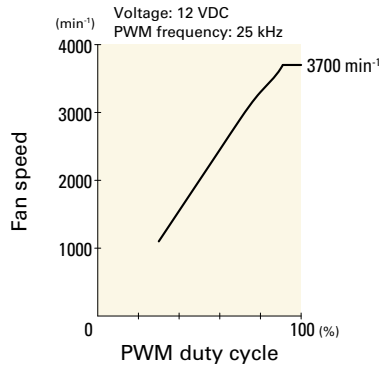

9WL0824P4J001 With pulse sensor with PWM control

PWM duty cycle

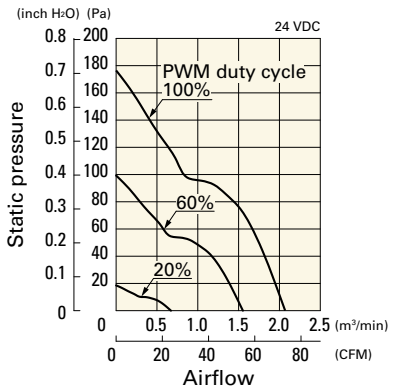

Operating voltage range

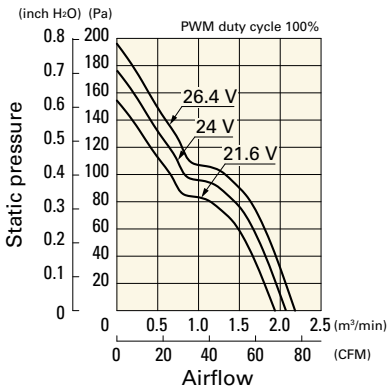

PWM duty - Speed characteristics example

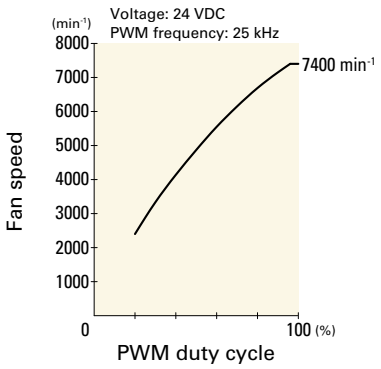

Airflow - Static Pressure Characteristics / PWM Duty - Speed Characteristics Example

9WL0824P4G001 With pulse sensor with PWM control

PWM duty cycle

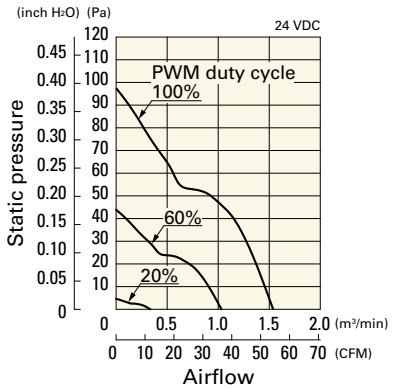

Operating voltage range

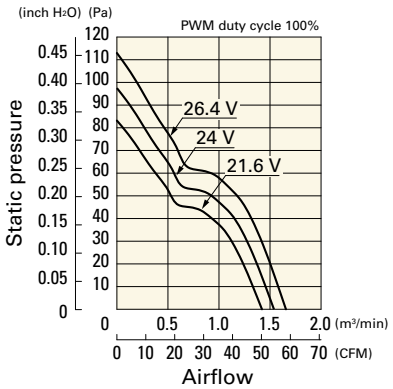

PWM duty - Speed characteristics example

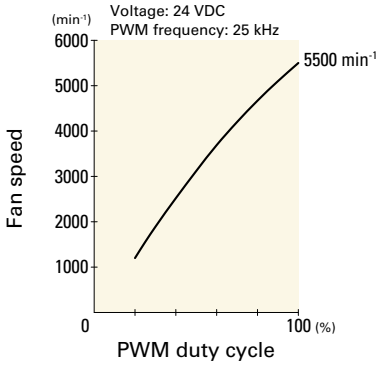

9WL0824P4H001 With pulse sensor with PWM control

PWM duty cycle

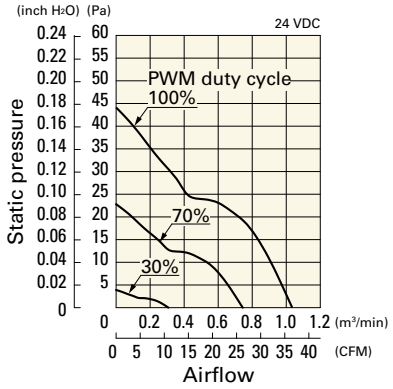

Operating voltage range

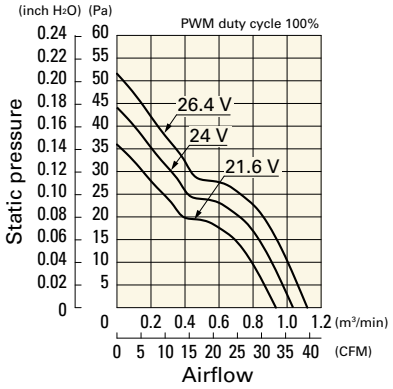

PWM duty - Speed characteristics example

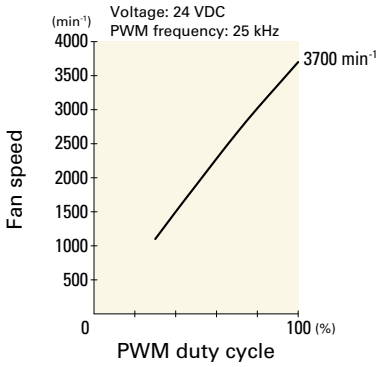

Airflow - Static Pressure Characteristics

9WL0812L4001 With pulse sensor

Operating voltage range

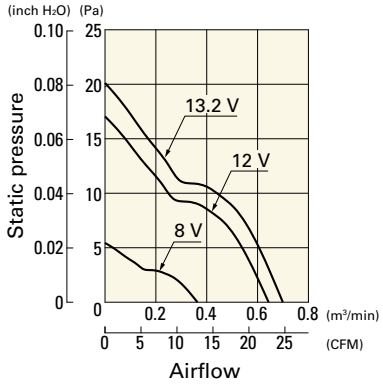

9WL0824F4001 With pulse sensor

Operating voltage range

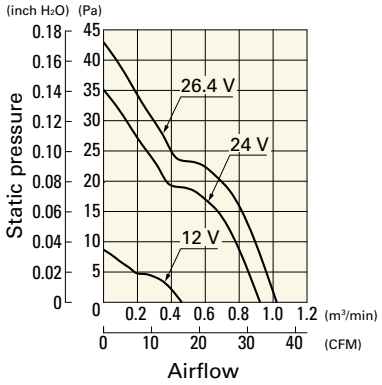

9WL0824L4001 With pulse sensor

Operating voltage range

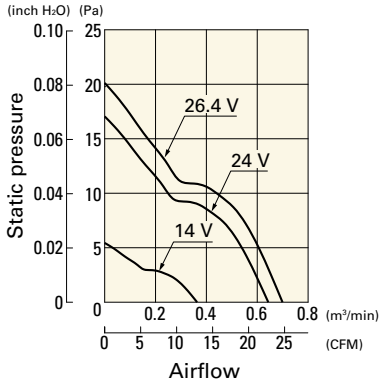

Dimensions (unit: mm) (With pulse sensor with PWM control)

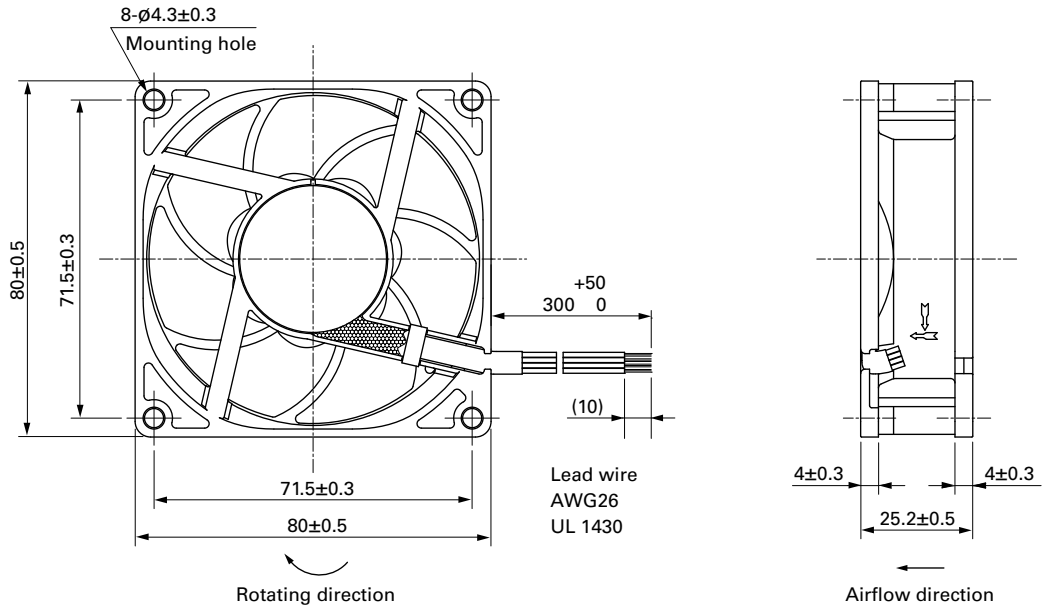

Reference Dimensions of Mounting Holes and Vent Opening (unit: mm)

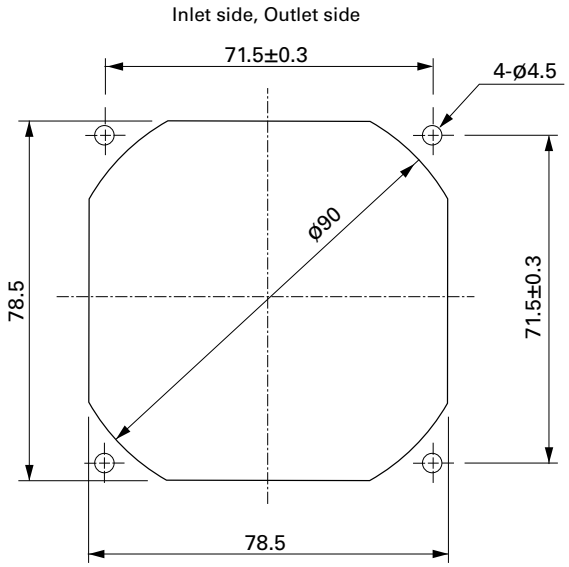

Options

Finger guards	page: p. 590
Model no.: 109-049E, 109-049H	

Resin finger guards	page: p. 597
Model no.: 109-1002G	

80×80×38 mm

IP68

San Ace 80W 9WV type

General Specifications

- Material ..... Frame: Plastic (Flammability: UL 94V-0), Impeller: Plastic (Flammability: UL 94V-1)
- Expected life ..... See the table below. (L10 life: 90% survival rate for continuous operation in indoor free air at 60°C, rated voltage) Expected life at 40°C is for reference only.
- Motor protection function ..... Locked rotor burnout protection, Reverse polarity protection For details, please refer to p. 608.
- Dielectric strength ..... 50/60 Hz, 500 VAC, for 1 minute (between lead wire conductors and frame)
- Insulation resistance ..... 10 MΩ min. at 500 VDC (between lead wire conductors and frame)
- Sound pressure level (SPL) ..... A-weighted sound pressure level (SPL) at 1 m away from the air inlet.
- Storage temperature ..... -30 to +70˚C (Non-condensing)
- Lead wire ..... ⊕Red ⊖Black Sensor Yellow Control Brown
- Mass ..... 235 g
- Ingress protection ..... IP68 For more information on IP rating, refer to p. 617.

Specifications

The models listed below **have ribs and a pulse sensor with PWM control.** For models without ribs, append "1" to the end of model numbers.

Model no.	Rated voltage [V]	Operating voltage range [V]	PWM duty cycle* [%]	Rated current [A]	Rated input [W]	Rated speed [min⁻¹]	Max. airflow [m³/min]	Max. airflow [CFM]	Max. static pressure [Pa]	Max. static pressure [inchH₂O]	SPL [dB (A)]	Operating temperature [˚C]	Expected life [h]
9WV0812P1M001	12	10.2 to 13.8	100	0.75	9	6000	2.29	80.9	169	0.68	51	-20 to +70	40000/60˚C (70000/40˚C)
			0	0.09	1.08	1700	0.65	23	13.6	0.05	19		
9WV0848P1H001	48	40.8 to 52.8	100	0.75	36	9700	3.7	131	440	1.77	63		
			0	0.15	7.2	4500	1.72	60.7	94.7	0.38	43		

PWM frequency is 25 kHz. Models without ratings for 0% PWM duty cycle have zero speed at 0%. When control terminal is open, speed is the same as at 100% duty cycle.

Note: Sensor and control options are available for selection. Refer to the table on p. 653.

Airflow - Static Pressure Characteristics / PWM Duty - Speed Characteristics Example

9WV0812P1M001 With pulse sensor with PWM control

PWM duty cycle

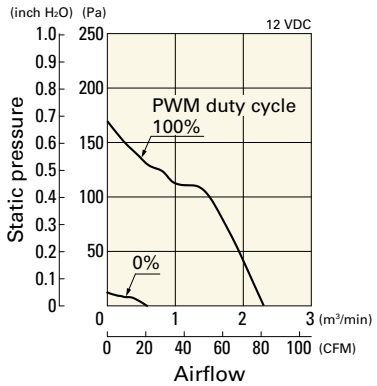

Operating voltage range

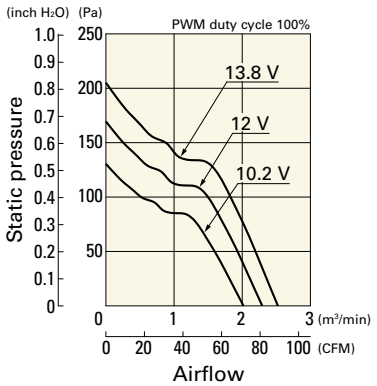

PWM duty - Speed characteristics example

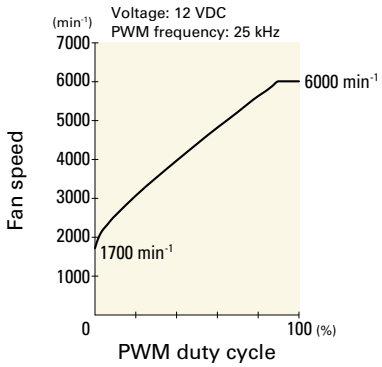

Airflow - Static Pressure Characteristics / PWM Duty - Speed Characteristics Example

9WV0848P1H001 With pulse sensor with PWM control

PWM duty cycle

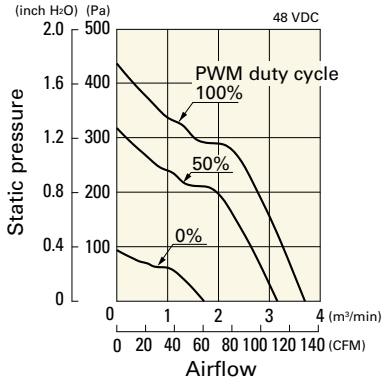

Operating voltage range

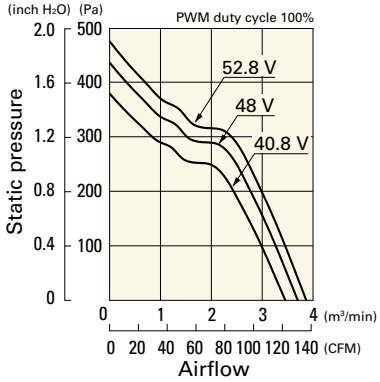

PWM duty - Speed characteristics example

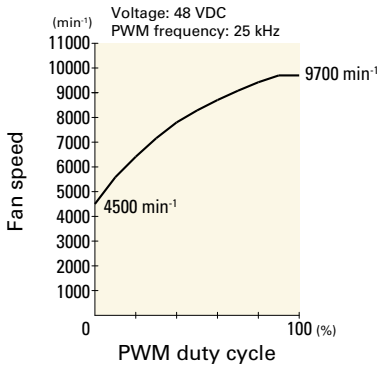

Dimensions (unit: mm) (With ribs)

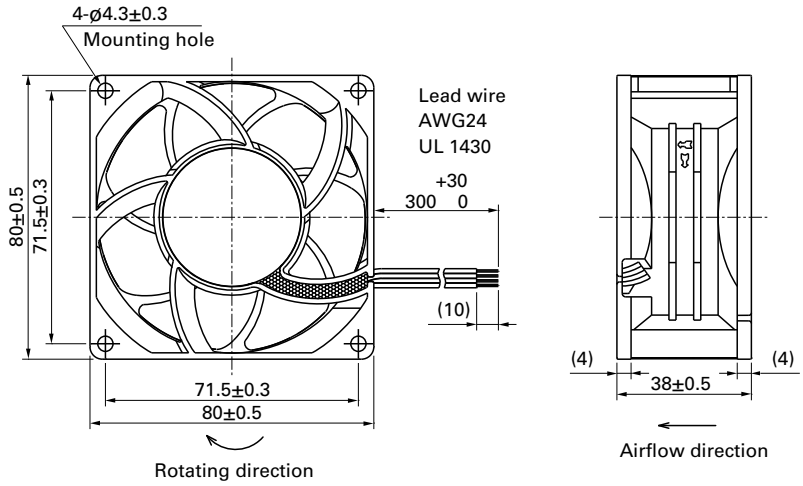

Reference Dimensions of Mounting Holes and Vent Opening (unit: mm)

Inlet side, Outlet side

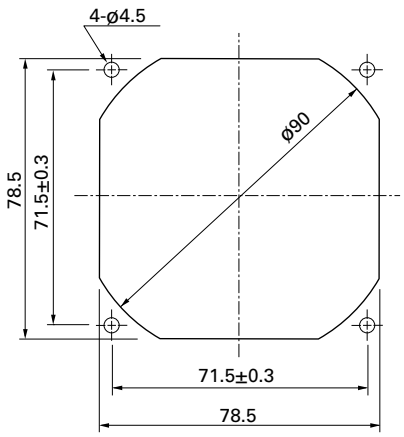

Options

Finger guards	page: p. 590
Model no.: 109-049E, 109-049H	

Resin finger guards	page: p. 597
Model no.: 109-1002G	

92×92×25 mm

San Ace 92W 9WPA type

IP68

General Specifications

- Material ..... Frame: Plastic (Flammability: UL 94V-0), Impeller: Plastic (Flammability: UL 94V-1)
- Expected life ..... See the table below. (L10 life: 90% survival rate for continuous operation in indoor free air at 60°C, rated voltage) Expected life at 40°C is for reference only.
- Motor protection function ..... Locked rotor burnout protection, Reverse polarity protection For details, please refer to p. 608.
- Dielectric strength ..... 50/60 Hz, 500 VAC, for 1 minute (between lead wire conductors and frame)
- Insulation resistance ..... 10 MΩ min. at 500 VDC (between lead wire conductors and frame)
- Sound pressure level (SPL) ..... A-weighted sound pressure level (SPL) at 1 m away from the air inlet.
- Storage temperature ..... -30 to +70°C (Non-condensing)
- Lead wire ..... ⊕Red ⊖Black Sensor Yellow Control Brown (For models without PWM control, there is no speed control wiring.)
- Mass ..... 135 g
- Ingress protection ..... IP68 For more information on IP rating, refer to p. 617.

Specifications

The models listed below **have ribs and a pulse sensor with PWM control.** For models without ribs, append "1" to the end of model numbers.

Model no.	Rated voltage [V]	Operating voltage range [V]	PWM duty cycle* [%]	Rated current [A]	Rated input [W]	Rated speed [min⁻¹]	Max. airflow [m³/min]	Max. airflow [CFM]	Max. static pressure [Pa]	Max. static pressure [inchH₂O]	SPL [dB (A)]	Operating temperature [°C]	Expected life [h]
9WPA0912P4G001	12	10.8 to 13.2	100	0.5	6	5700	2.45	86.5	126	0.51	47	-20 to +70	40000/60°C (70000/40°C)
			20	0.04	0.5	1200	0.52	18.4	6	0.02	11		
9WPA0924P4G001	24	21.6 to 26.4	100	0.25	6	5700	2.45	86.5	126	0.51	47		
			20	0.03	0.7	1200	0.52	18.4	6	0.02	11		

PWM frequency is 25 kHz. Models without ratings for 0% PWM duty cycle have zero speed at 0%. When control terminal is open, speed is the same as at 100% duty cycle.

The models listed below **have ribs and a pulse sensor.** For models without ribs, append "1" to the end of model numbers.

Model no.	Rated voltage [V]	Operating voltage range [V]	Rated current [A]	Rated input [W]	Rated speed [min⁻¹]	Max. airflow [m³/min]	Max. airflow [CFM]	Max. static pressure [Pa]	Max. static pressure [inchH₂O]	SPL [dB (A)]	Operating temperature [°C]	Expected life [h]
9WPA0924S4001	24	12 to 27.6	0.1	2.4	3900	1.67	59	59	0.24	37	-20 to +70	40000/60°C (70000/40°C)
9WPA0924H4001			0.08	1.92	3400	1.46	51.5	44.8	0.18	33		
9WPA0924F4001			0.06	1.44	2900	1.24	43.8	32.6	0.13	28		
9WPA0924B4001			0.04	0.96	2100	0.9	31.7	17.1	0.07	18		

Note 1: Sensor and control options are available for selection. Refer to the table on pp. 652 to 653.
Note 2: The » mark indicates Short LeadTime Service applicable models. See p. 664 for details.

Airflow - Static Pressure Characteristics / PWM Duty - Speed Characteristics Example

9WPA0912P4G001 With pulse sensor with PWM control

PWM duty cycle

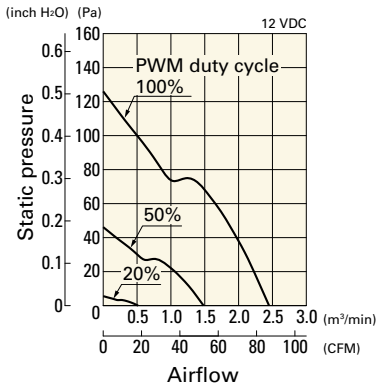

Operating voltage range

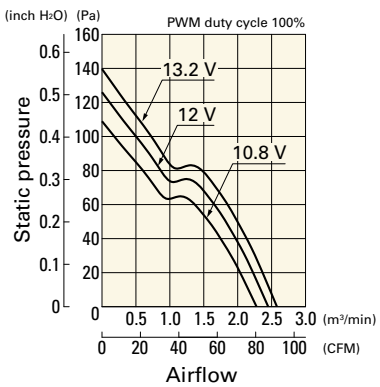

PWM duty - Speed characteristics example

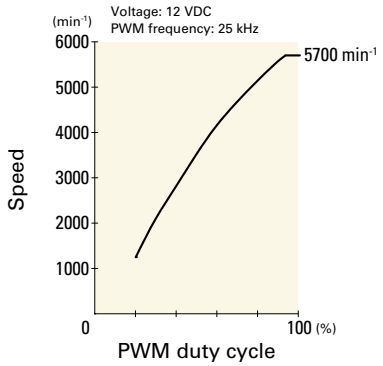

Airflow - Static Pressure Characteristics / PWM Duty - Speed Characteristics Example

9WPA0924P4G001 With pulse sensor with PWM control

PWM duty cycle

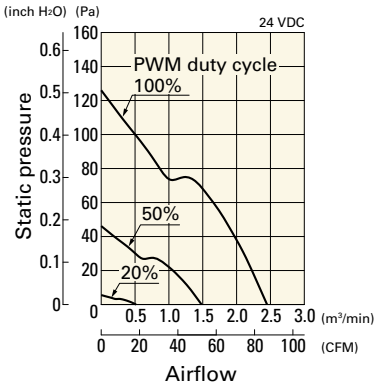

Operating voltage range

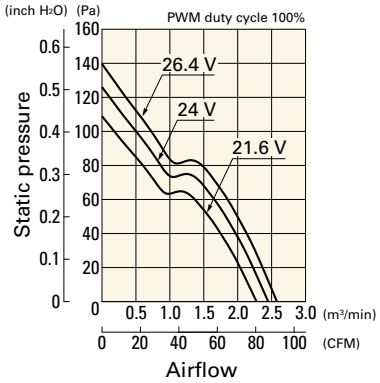

PWM duty - Speed characteristics example

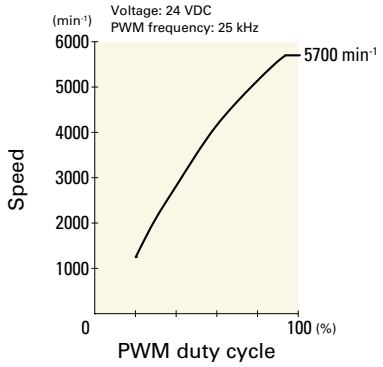

Airflow - Static Pressure Characteristics

9WPA0924S4001 With pulse sensor

Operating voltage range

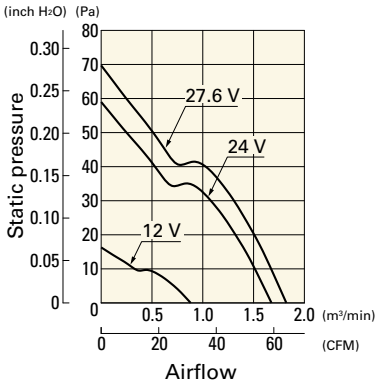

9WPA0924H4001 With pulse sensor

Operating voltage range

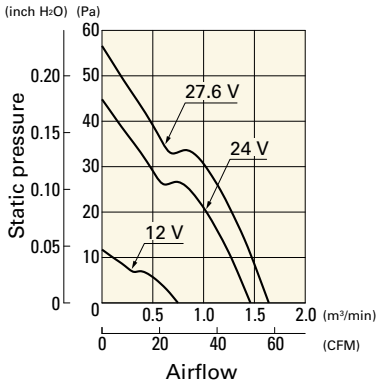

9WPA0924F4001 With pulse sensor

Operating voltage range

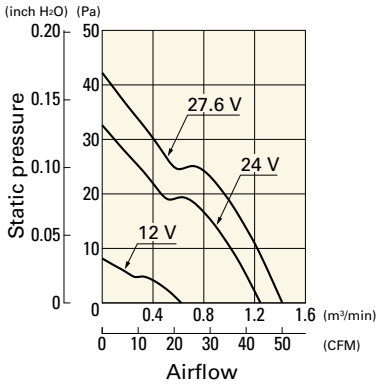

9WPA0924B4001 With pulse sensor

Operating voltage range

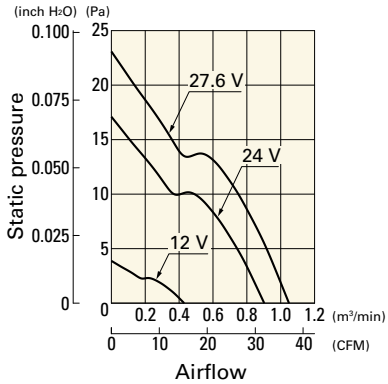

Dimensions (unit: mm) (Ribbed frame with pulse sensor with PWM control)

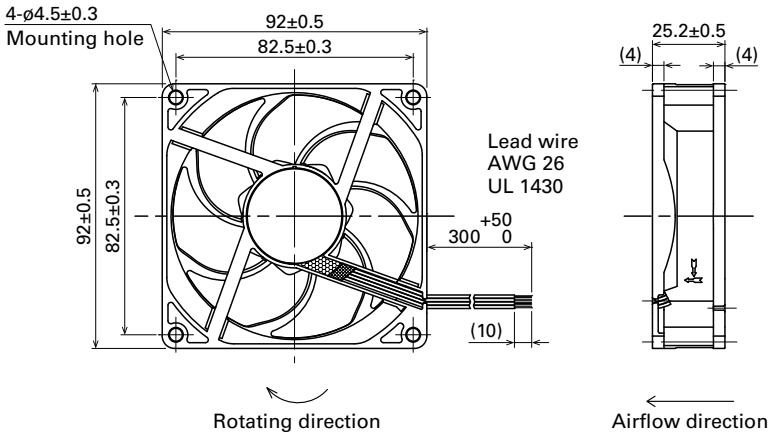

Reference Dimensions of Mounting Holes and Vent Opening (unit: mm)

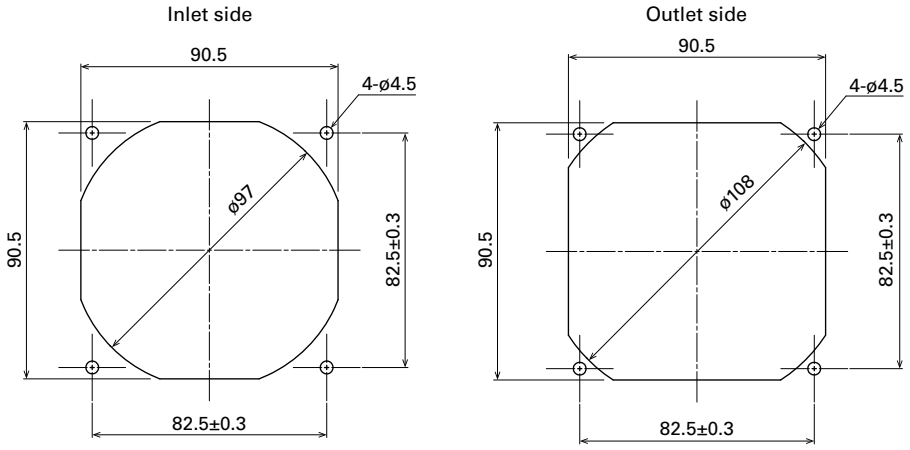

Options

Finger guards	page: p. 591
Model no.: 109-099E, 109-099H	

Resin finger guards	page: p. 597
Model no.: 109-1001G	

Splash Proof Fan

92×92×25 mm

San Ace 92W 9WL type

IP68

General Specifications

- Material ..... Frame: Aluminum (Black coating), Impeller: Plastic (Flammability: UL 94V-1)
- Expected life ..... See the table below. (L10 life: 90% survival rate for continuous operation in indoor free air at 60°C, rated voltage) Expected life at 40°C is for reference only.
- Motor protection function ..... Locked rotor burnout protection, Reverse polarity protection For details, please refer to p. 608.
- Dielectric strength ..... 50/60 Hz, 500 VAC, for 1 minute (between lead wire conductors and frame)
- Insulation resistance ..... 10 MΩ min. at 500 VDC (between lead wire conductors and frame)
- Sound pressure level (SPL) ..... A-weighted sound pressure level (SPL) at 1 m away from the air inlet.
- Storage temperature ..... -30 to +70˚C (Non-condensing)
- Lead wire ..... ⊕Red ⊖Black Sensor Yellow Control Brown (For models without PWM control, there is no speed control wiring.)
- Mass ..... 170 g
- Ingress protection ..... IP68 For more information on IP rating, refer to p. 617.

Specifications

The models listed below **have ribs and a pulse sensor with PWM control.**

Model no.	Rated voltage [V]	Operating voltage range [V]	PWM duty cycle* [%]	Rated current [A]	Rated input [W]	Rated speed [min⁻¹]	Max. airflow [m³/min]	Max. airflow [CFM]	Max. static pressure [Pa]	Max. static pressure [inchH₂O]	SPL [dB (A)]	Operating temperature [˚C]	Expected life [h]
9WL0912P4J001	12	10.8 to 13.2	100	0.42	5.04	5000	2.2	77.7	105	0.42	44	-20 to +70	180000/60˚C (215000/40˚C)
			20	0.04	0.48	1200	0.52	18.4	6.04	0.024	11		
9WL0912P4G001			100	0.3	3.6	4400	1.93	68.2	81	0.33	40		
			20	0.04	0.48	1000	0.43	15.1	4.18	0.016	8		
9WL0912P4S001			100	0.22	2.64	3850	1.69	59.7	62.1	0.25	37		
			30	0.04	0.48	1400	0.61	21.5	8.21	0.032	13		
9WL0912P4H001			100	0.15	1.8	3150	1.38	48.7	41.6	0.17	32		
			35	0.04	0.48	1100	0.48	16.9	5.07	0.02	9		
9WL0924P4J001	24	21.6 to 26.4	100	0.21	5.04	5000	2.2	77.7	105	0.42	44		
			20	0.02	0.48	1100	0.48	16.9	5.07	0.02	9		
9WL0924P4S001			100	0.11	2.64	3850	1.69	59.7	62.1	0.25	37		
			30	0.02	0.48	1300	0.57	20.1	7.08	0.028	12		
9WL0924P4H001			100	0.07	1.68	3150	1.38	48.7	41.6	0.17	32		
			30	0.02	0.48	1000	0.43	15.1	4.18	0.016	8		

PWM frequency is 25 kHz. Models without ratings for 0% PWM duty cycle have zero speed at 0%. When control terminal is open, speed is the same as at 100% duty cycle.

The models listed below **have ribs and a pulse sensor.**

Model no.	Rated voltage [V]	Operating voltage range [V]	Rated current [A]	Rated input [W]	Rated speed [min⁻¹]	Max. airflow [m³/min]	Max. airflow [CFM]	Max. static pressure [Pa]	Max. static pressure [inchH₂O]	SPL [dB (A)]	Operating temperature [˚C]	Expected life [h]
9WL0912M4001	12	10.2 to 13.8	0.08	0.96	2400	1.05	37.1	24.1	0.097	24	-20 to +70	180000/60˚C (215000/40˚C)
9WL0924F4001	24	20.4 to 27.6	0.05	1.2	2800	1.22	43.1	32.8	0.13	29		
9WL0924M4001			0.04	0.96	2400	1.05	37.1	24.1	0.097	24		

Note 1: Sensor and control options are available for selection. Refer to the table on p. 651.
Note 2: The » mark indicates Short Lead Time Service applicable models. See p. 664 for details.

Airflow - Static Pressure Characteristics / PWM Duty - Speed Characteristics Example

9WL0912P4J001 With pulse sensor with PWM control

PWM duty cycle

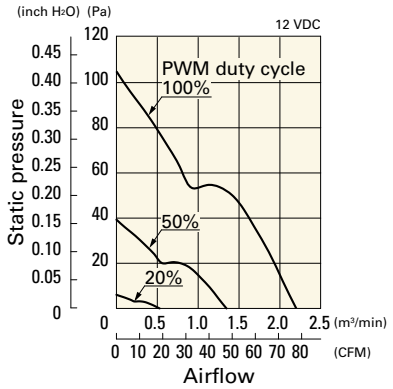

Operating voltage range

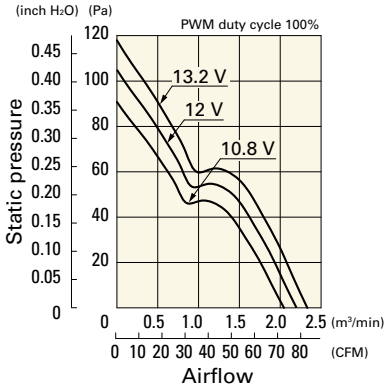

PWM duty - Speed characteristics example

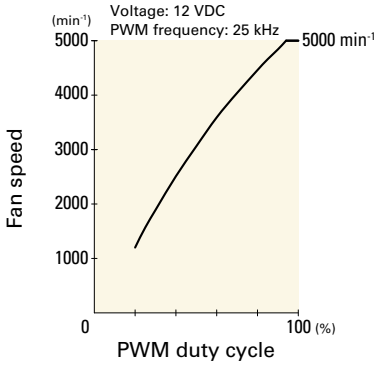

9WL0912P4G001 With pulse sensor with PWM control

PWM duty cycle

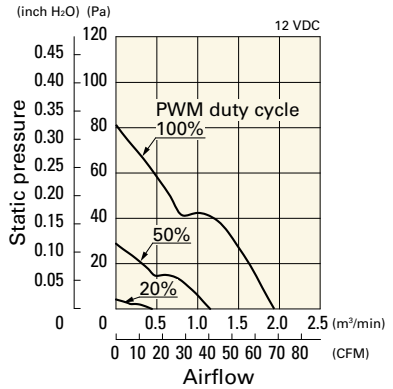

Operating voltage range

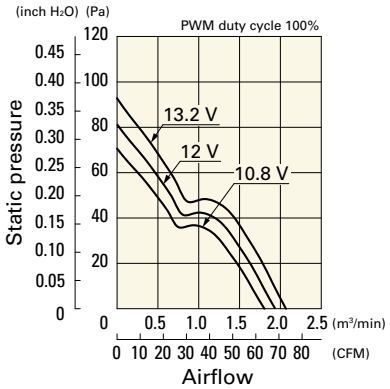

PWM duty - Speed characteristics example

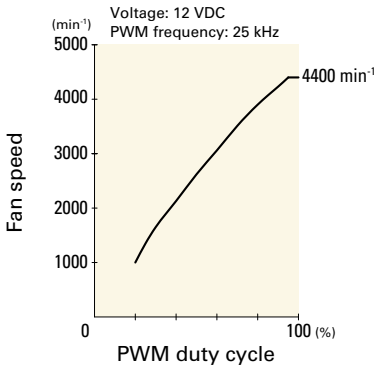

9WL0912P4S001 With pulse sensor with PWM control

PWM duty cycle

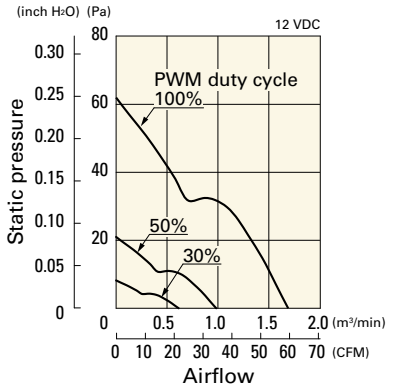

Operating voltage range

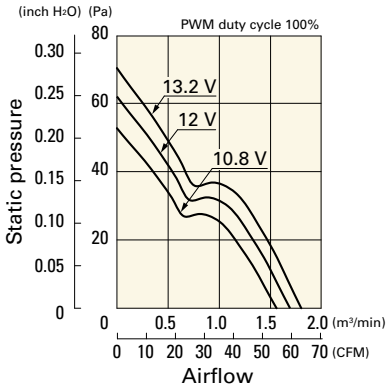

PWM duty - Speed characteristics example

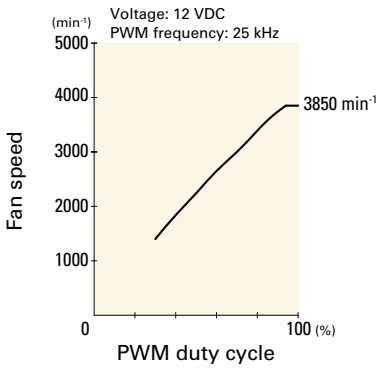

9WL0912P4H001 With pulse sensor with PWM control

PWM duty cycle

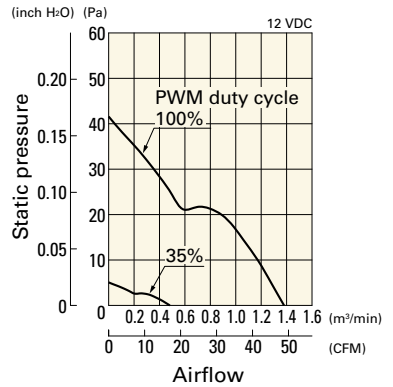

Operating voltage range

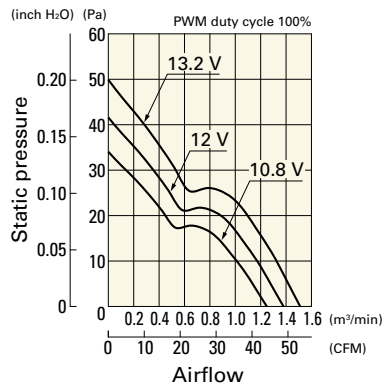

PWM duty - Speed characteristics example

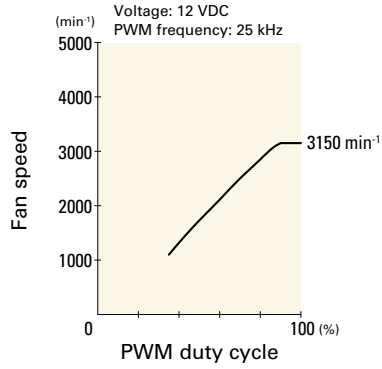

Airflow - Static Pressure Characteristics / PWM Duty - Speed Characteristics Example

9WL0924P4J001 With pulse sensor with PWM control

PWM duty cycle

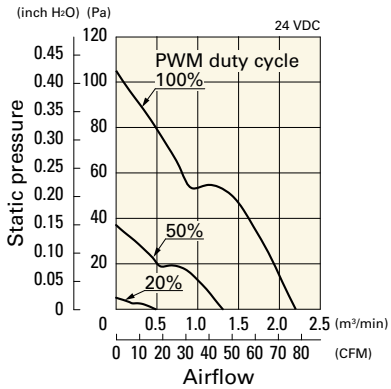

Operating voltage range

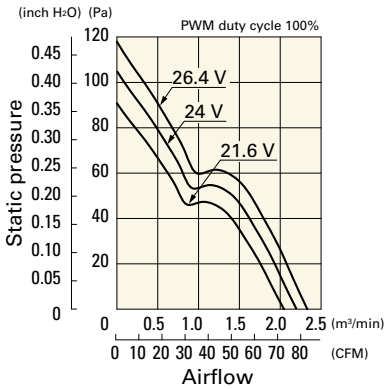

PWM duty - Speed characteristics example

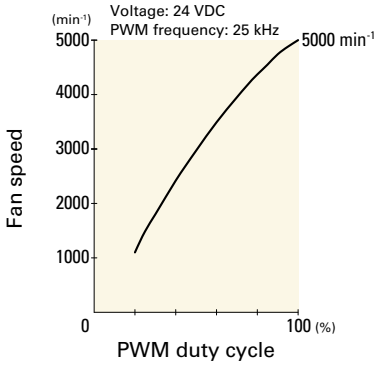

9WL0924P4S001 With pulse sensor with PWM control

PWM duty cycle

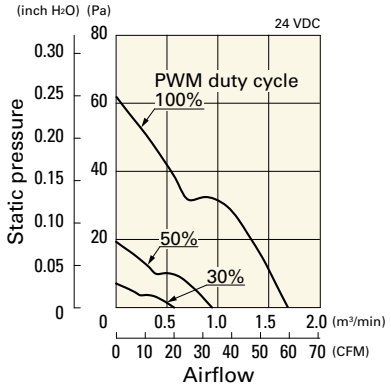

Operating voltage range

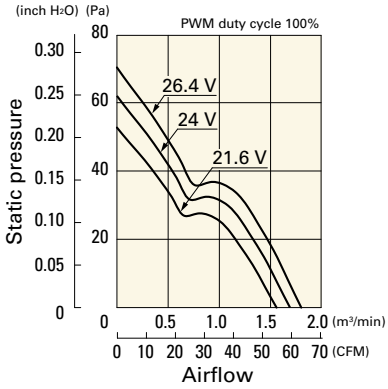

PWM duty - Speed characteristics example

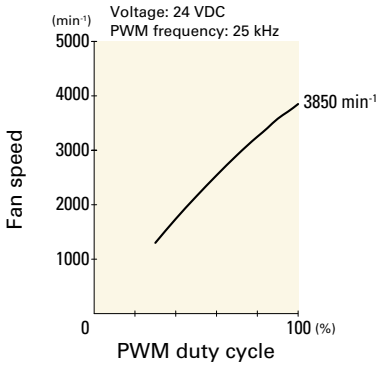

9WL0924P4H001 With pulse sensor with PWM control

PWM duty cycle

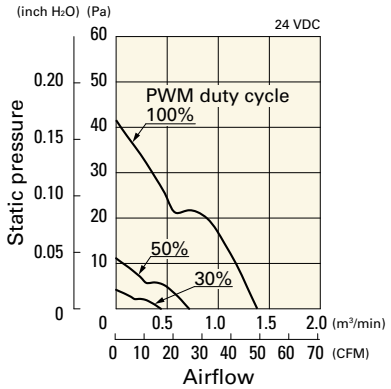

Operating voltage range

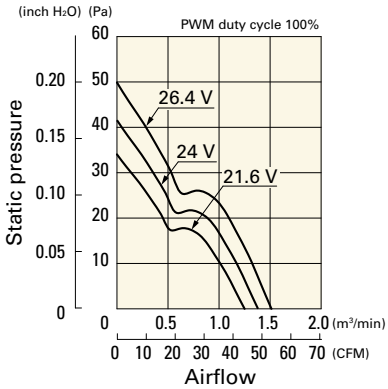

PWM duty - Speed characteristics example

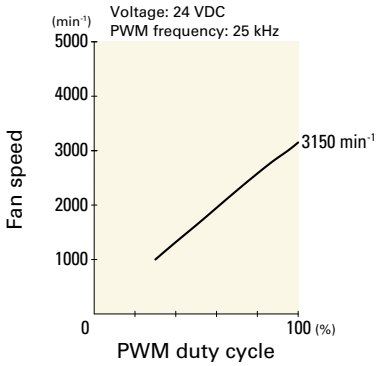

Airflow - Static Pressure Characteristics

9WL0912M4001 With pulse sensor

Operating voltage range

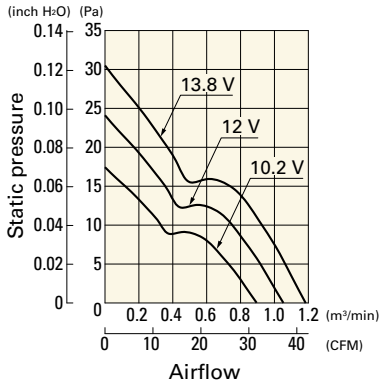

9WL0924F4001 With pulse sensor

Operating voltage range

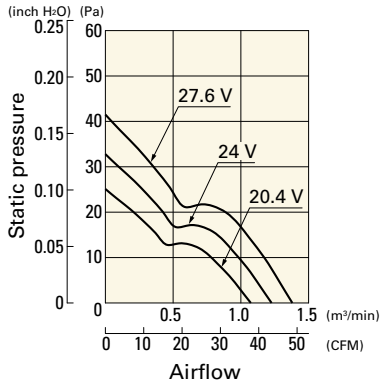

9WL0924M4001 With pulse sensor

Operating voltage range

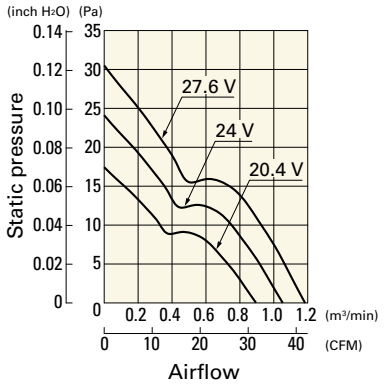

Dimensions (unit: mm) (With pulse sensor with PWM control)

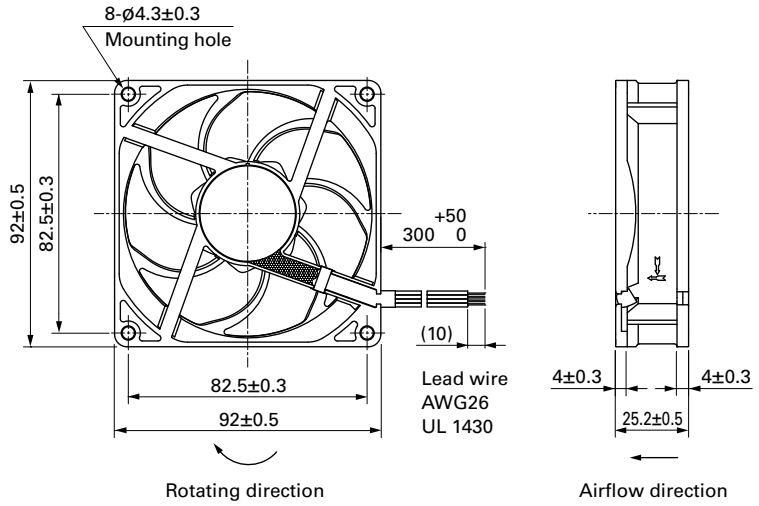

Reference Dimensions of Mounting Holes and Vent Opening (unit: mm)

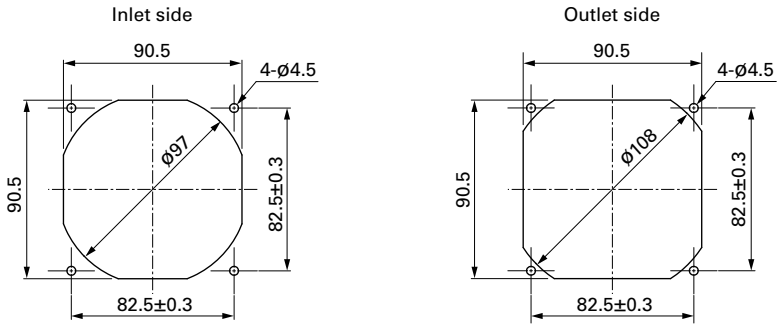

Options

Finger guards	page: p. 591
Model no.: 109-099E, 109-099H	

Resin finger guards	page: p. 597
Model no.: 109-1001G	

Splash Proof Fan

92×92×38 mm

San Ace 92W 9WL type

IP68

General Specifications

- Material ..... Frame: Aluminum (Black coating), Impeller: Plastic (Flammability: UL 94V-1)
- Expected life ..... See the table below. (L10 life: 90% survival rate for continuous operation in indoor free air at 60°C, rated voltage) Expected life at 40°C is for reference only.
- Motor protection function ..... Locked rotor burnout protection, Reverse polarity protection For details, please refer to p. 608.
- Dielectric strength ..... 50/60 Hz, 500 VAC, for 1 minute (between lead wire conductors and frame)
- Insulation resistance ..... 10 MΩ min. at 500 VDC (between lead wire conductors and frame)
- Sound pressure level (SPL) ..... A-weighted sound pressure level (SPL) at 1 m away from the air inlet.
- Storage temperature ..... -30 to +70°C (Non-condensing)
- Lead wire ..... ⊕Red ⊖Black Sensor Yellow Control Brown
- Mass ..... 300 g
- Ingress protection ..... IP68 For more information on IP rating, refer to p. 617.

Specifications

The models listed below **have ribs and a pulse sensor with PWM control.**

Model no.	Rated voltage [V]	Operating voltage range [V]	PWM duty cycle* [%]	Rated current [A]	Rated input [W]	Rated speed [min⁻¹]	Max. airflow [m³/min]	Max. airflow [CFM]	Max. static pressure [Pa]	Max. static pressure [inchH₂O]	SPL [dB (A)]	Operating temperature [°C]	Expected life [h]
9WL0912P1H001	12	10.2 to 13.2	100	1.9	22.8	9000	3.7	130.6	430	1.72	61	-20 to +70	100000/60°C (135000/40°C)
			20	0.13	1.56	2700	1.11	39.1	48.0	0.19	30		
9WL0912P1F001			100	0.95	11.4	7000	2.9	102.4	263	1.05	55		
			20	0.1	1.2	2000	0.83	29.3	26.3	0.1	22		
9WL0924P1H001	24	20.4 to 26.4	100	0.95	22.8	9000	3.7	130.6	430	1.72	61		
			20	0.07	1.68	2700	1.11	39.1	48.0	0.19	30		
9WL0924P1F001			100	0.5	12	7000	2.9	102.4	263	1.05	55		
			20	0.06	1.44	2000	0.83	29.3	26.3	0.1	22		
9WL0948P1H601	48	40.8 to 52.8	100	0.48	23.04	9000	3.7	130.6	430	1.72	61		
			20	0.05	2.4	2700	1.11	39.1	48.0	0.19	30		
9WL0948P1F601			100	0.24	11.52	7000	2.9	102.4	263	1.05	55		
			20	0.05	2.4	2000	0.83	29.3	26.3	0.1	22		

PWM frequency is 25 kHz. Models without ratings for 0% PWM duty cycle have zero speed at 0%. When control terminal is open, speed is the same as at 100% duty cycle.

Note 1: Sensor and control options are available for selection. Refer to the table on p. 651.
Note 2: The mark indicates Short Lead Time Service applicable models. See p. 664 for details.

Airflow - Static Pressure Characteristics / PWM Duty - Speed Characteristics Example

9WL0912P1H001 With pulse sensor with PWM control

PWM duty cycle

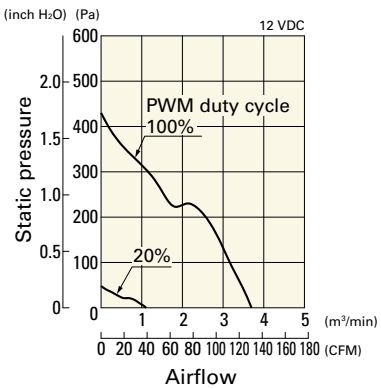

Operating voltage range

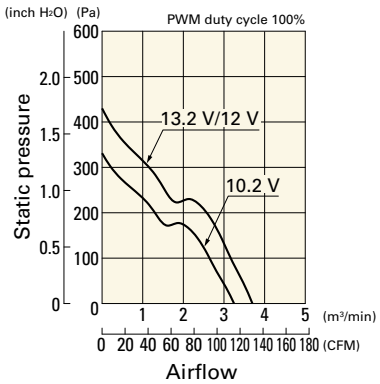

PWM duty - Speed characteristics example

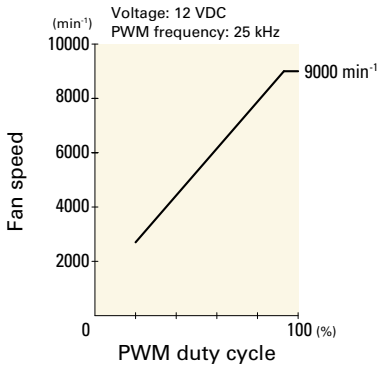

Airflow - Static Pressure Characteristics / PWM Duty - Speed Characteristics Example

9WL0912P1F001 With pulse sensor with PWM control

PWM duty cycle

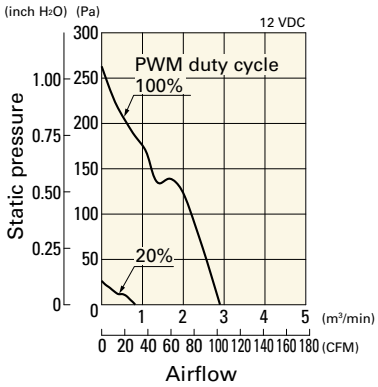

Operating voltage range

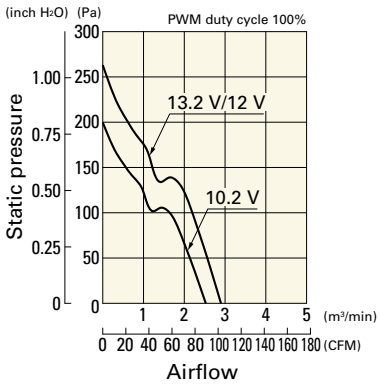

PWM duty - Speed characteristics example

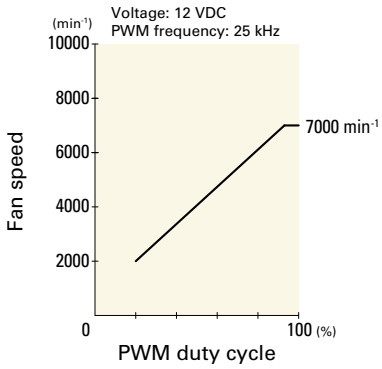

9WL0924P1H001 With pulse sensor with PWM control

PWM duty cycle

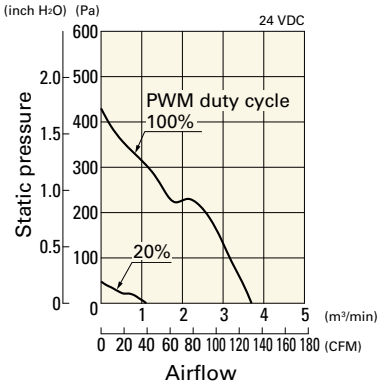

Operating voltage range

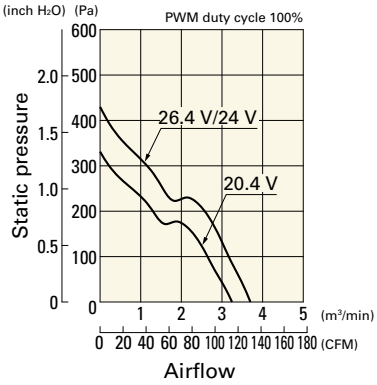

PWM duty - Speed characteristics example

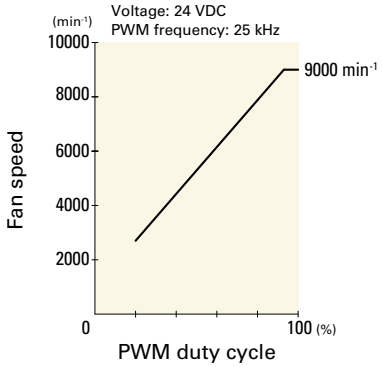

9WL0924P1F001 With pulse sensor with PWM control

PWM duty cycle

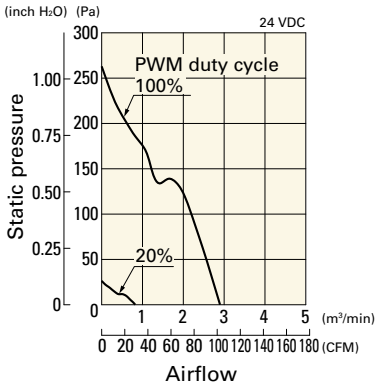

Operating voltage range

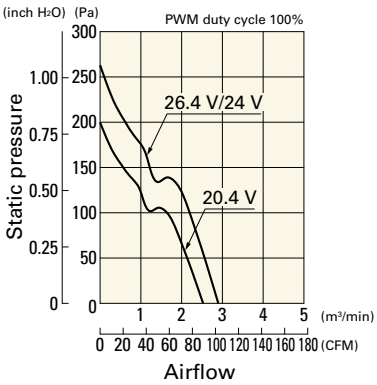

PWM duty - Speed characteristics example

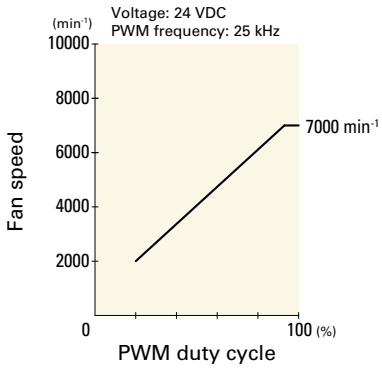

9WL0948P1H601 With pulse sensor with PWM control

PWM duty cycle

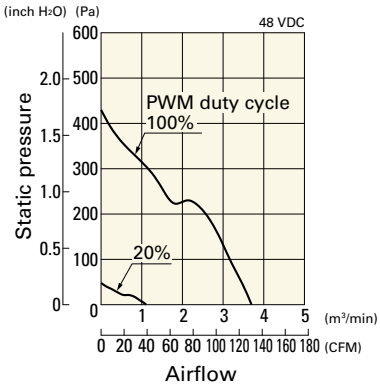

Operating voltage range

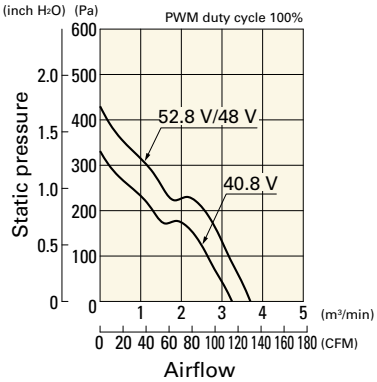

PWM duty - Speed characteristics example

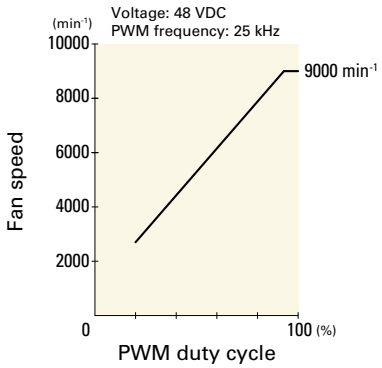

Airflow - Static Pressure Characteristics / PWM Duty - Speed Characteristics Example

9WL0948P1F601 With pulse sensor with PWM control

PWM duty cycle

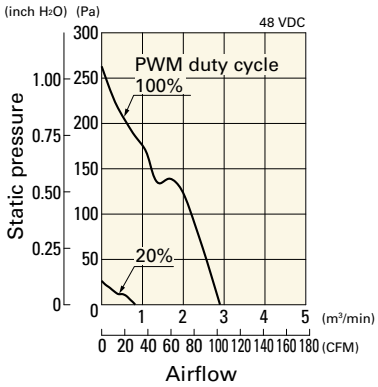

Operating voltage range

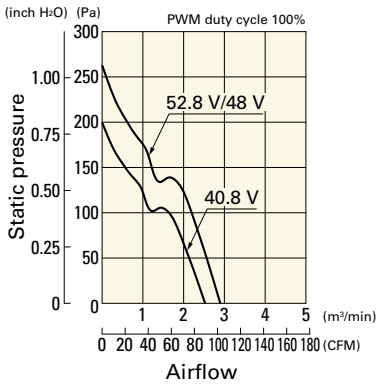

PWM duty - Speed characteristics example

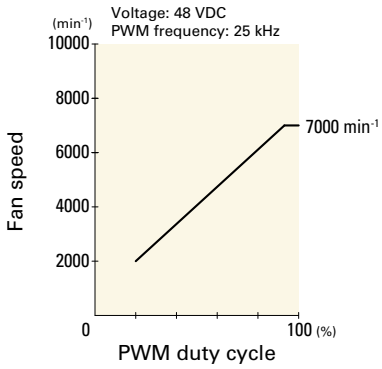

Dimensions (unit: mm)

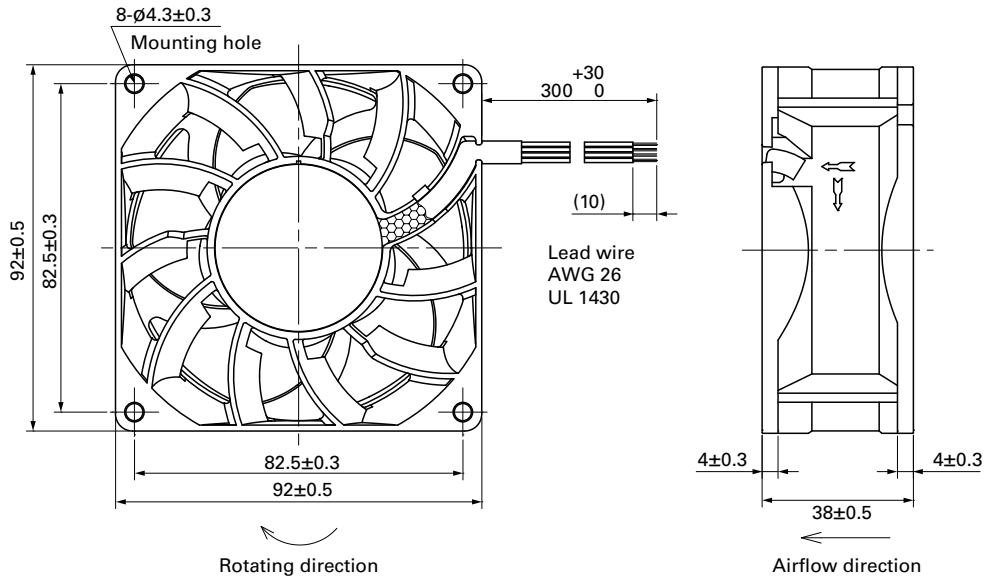

Reference Dimensions of Mounting Holes and Vent Opening (unit: mm)

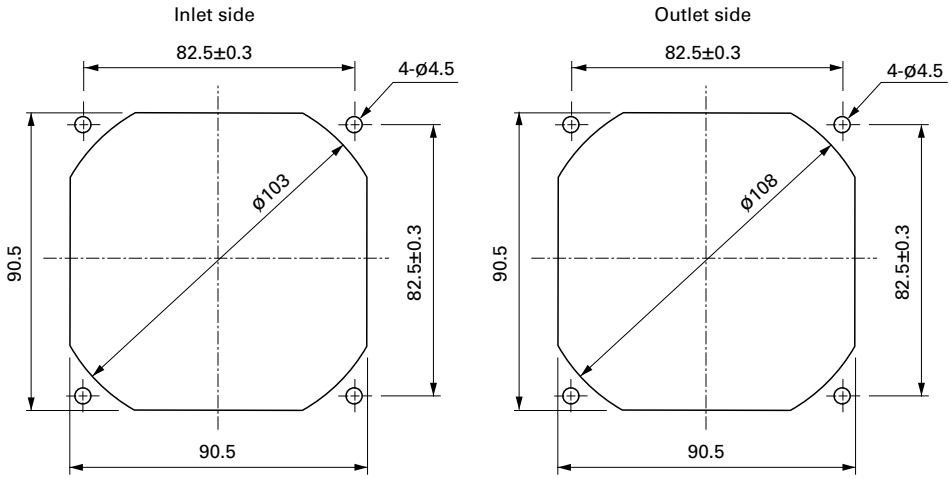

Options

Finger guards	page: p. 591
Model no.: 109-099E, 109-099H	

Resin finger guards	page: p. 597
Model no.: 109-1001G	

92×92×38 mm

IP68

San Ace 92W 9WV type

General Specifications

- Material ..... Frame: Plastic (Flammability: UL 94V-0), Impeller: Plastic (Flammability: UL 94V-1)
- Expected life ..... See the table below. (L10 life: 90% survival rate for continuous operation in indoor free air at 60°C, rated voltage) Expected life at 40°C is for reference only.
- Motor protection function ..... Locked rotor burnout protection, Reverse polarity protection For details, please refer to p. 608.
- Dielectric strength ..... 50/60 Hz, 500 VAC, for 1 minute (between lead wire conductors and frame)
- Insulation resistance ..... 10 MΩ min. at 500 VDC (between lead wire conductors and frame)
- Sound pressure level (SPL) ..... A-weighted sound pressure level (SPL) at 1 m away from the air inlet.
- Storage temperature ..... -30 to +70°C (Non-condensing)
- Lead wire ..... ⊕Red ⊖Black Sensor Yellow Control Brown
- Mass ..... 265 g
- Ingress protection ..... IP68 For more information on IP rating, refer to p. 617.

Specifications

The models listed below **have ribs and a pulse sensor with PWM control.**

Model no.	Rated voltage [V]	Operating voltage range [V]	PWM duty cycle* [%]	Rated current [A]	Rated input [W]	Rated speed [min⁻¹]	Max. airflow [m³/min]	Max. airflow [CFM]	Max. static pressure [Pa]	Max. static pressure [inchH₂O]	SPL [dB (A)]	Operating temperature [°C]	Expected life [h]
9WV0924P1H001	24	20.4 to 26.4	100	1.6	38.4	8500	5.05	178	385	1.55	64	-20 to +60	30000/60°C (53000/40°C)
			20	0.16	3.84	3000	1.78	62.9	47.9	0.19	38		
9WV0948P1H001	48	40.8 to 52.8	100	0.82	39.4	8500	5.05	178	385	1.55	64	-20 to +70	
			0	0.14	6.7	4000	2.37	83.7	85.2	0.34	45		

PWM frequency is 25 kHz. Models without ratings for 0% PWM duty cycle have zero speed at 0%. When control terminal is open, speed is the same as at 100% duty cycle.

Note: Sensor and control options are available for selection. Refer to the table on p. 653.

Airflow - Static Pressure Characteristics / PWM Duty - Speed Characteristics Example

9WV0924P1H001 With pulse sensor with PWM control

PWM duty cycle

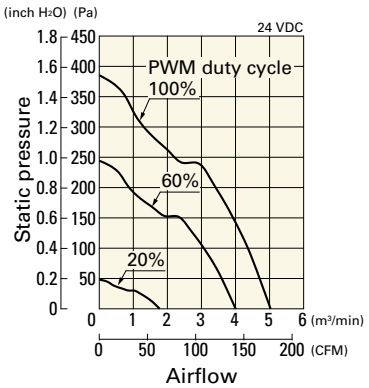

Operating voltage range

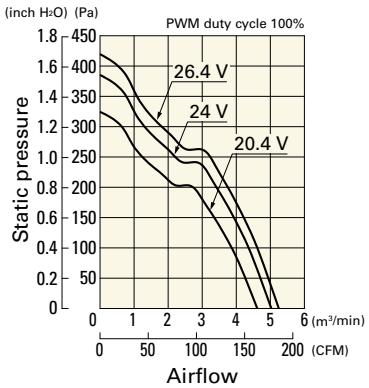

PWM duty - Speed characteristics example

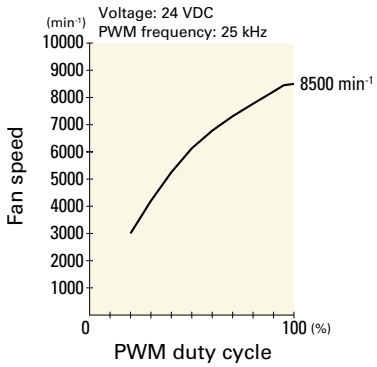

Airflow - Static Pressure Characteristics / PWM Duty - Speed Characteristics Example

9WV0948P1H001 With pulse sensor with PWM control

PWM duty cycle

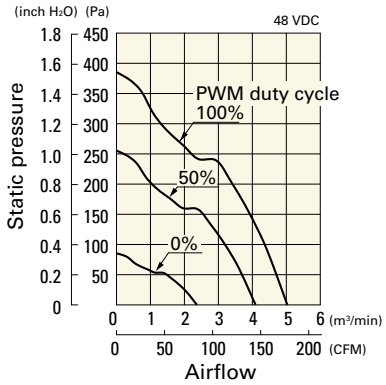

Operating voltage range

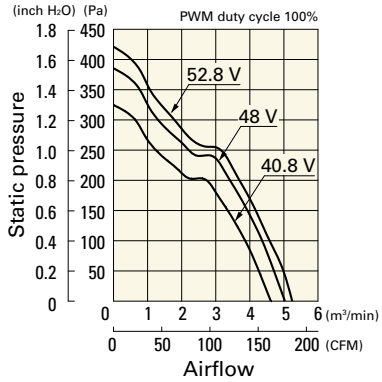

PWM duty - Speed characteristics example

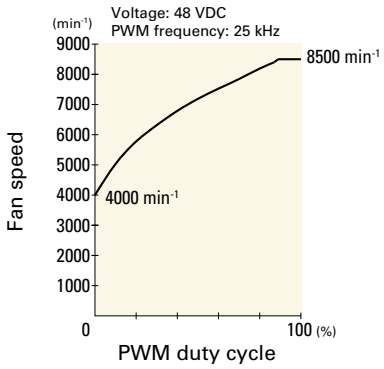

Dimensions (unit: mm)

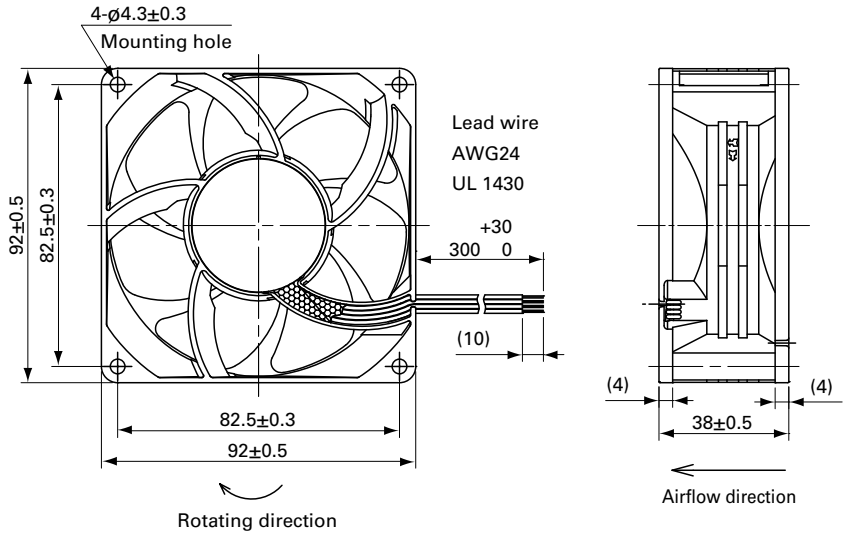

Reference Dimensions of Mounting Holes and Vent Opening (unit: mm)

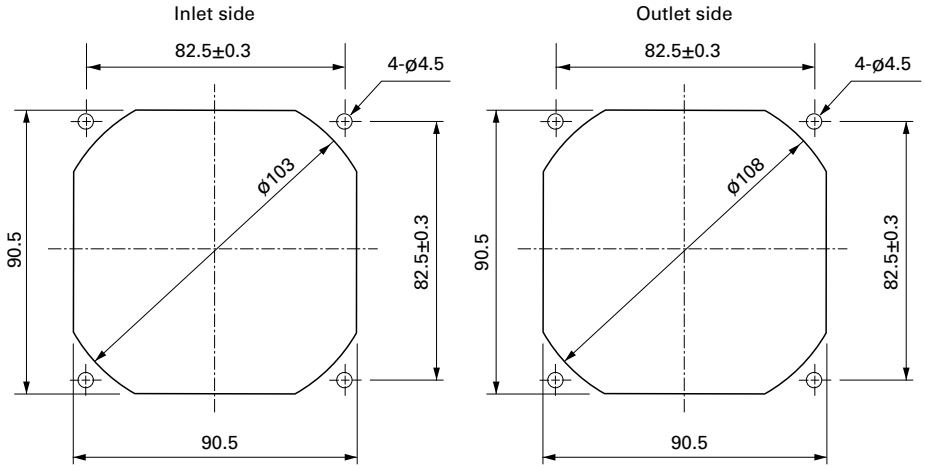

Options

Finger guards	page: p. 591
Model no.: 109-099E, 109-099H	

Resin finger guards	page: p. 597
Model no.: 109-1001G	

Errata sheet

120×120×38 mm

San Ace 120W 9WV type

IP68

General Specifications

- Material ..... Frame: Aluminum (Black coating), Impeller: Plastic (Flammability: UL 94V-1)
- Expected life ..... See the table below. (L10 life: 90% survival rate for continuous operation in indoor free air at 60°C, rated voltage) Expected life at 40°C is for reference only.
- Motor protection function ..... Locked rotor burnout protection, Reverse polarity protection For details, please refer to p. 608.
- Dielectric strength ..... 50/60 Hz, 500 VAC, for 1 minute (between lead wire conductors and frame)
- Insulation resistance ..... 10 MΩ min. at 500 VDC (between lead wire conductors and frame)
- Sound pressure level (SPL) ..... A-weighted sound pressure level (SPL) at 1 m away from the air inlet.
- Storage temperature ..... -30 to +70°C (Non-condensing)
- Lead wire ..... ⊕Red ⊖Black Sensor Yellow Control Brown
- Mass ..... 440 g
- Ingress protection ..... IP68 For more information on IP rating, refer to p. 617.

Specifications

The models listed below **have ribs and a pulse sensor with PWM control.**

Model no.	Rated voltage [V]	Operating voltage range [V]	PWM duty cycle* [%]	Rated current [A]	Rated input [W]	Rated speed [min⁻¹]	Max. airflow [m³/min]	Max. airflow [CFM]	Max. static pressure [Pa]	Max. static pressure [inchH₂O]	SPL [dB (A)]	Operating temperature [°C]	Expected life [h]
9WV1212P1J001	12	10.2 to 13.8	100	3	36	6400	6.35	224	360	1.45	64	-20 to +70	60000/60°C (90000/40°C)
			0	0.2	2.4	1500	1.49	52.6	19.8	0.08	33		
9WV1224P1J601	24	20.4 to 27.6	100	1.5	36	6400	6.35	224	360	1.45	64		
			0	0.12	2.88	1500	1.49	52.6	26.1	0.105	33		
9WV1224P1H001			100	0.8	19.2	5200	5.16	182	237	0.95	58		
9WV1248P1J001	48	40.8 to 55.2	100	0.65	31.2	6400	6.35	224	360	1.45	64		
			0	0.06	2.88	1500	1.49	52.6	26.1	0.105	33		

PWM frequency is 25 kHz. Models without ratings for 0% PWM duty cycle have zero speed at 0%. When control terminal is open, speed is the same as at 100% duty cycle.

Note: Sensor and control options are available for selection. Refer to the table on p. 653.

Airflow - Static Pressure Characteristics / PWM Duty - Speed Characteristics Example

9WV1212P1J001 With pulse sensor with PWM control

PWM duty cycle

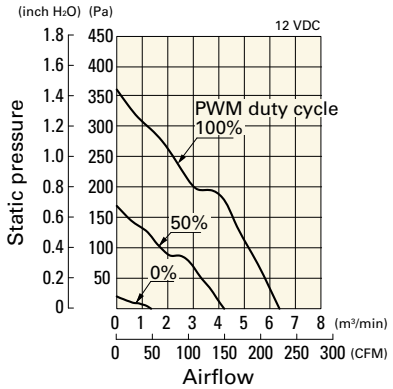

Operating voltage range

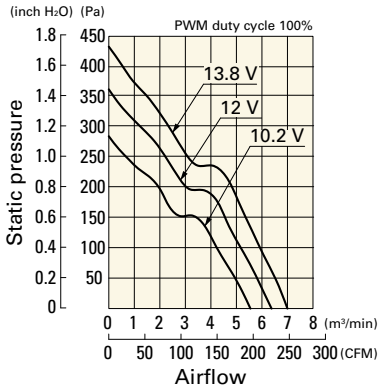

PWM duty - Speed characteristics example

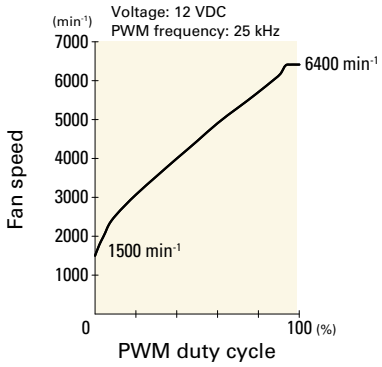

Airflow - Static Pressure Characteristics / PWM Duty - Speed Characteristics Example

9WV1224P1J601 With pulse sensor with PWM control

PWM duty cycle

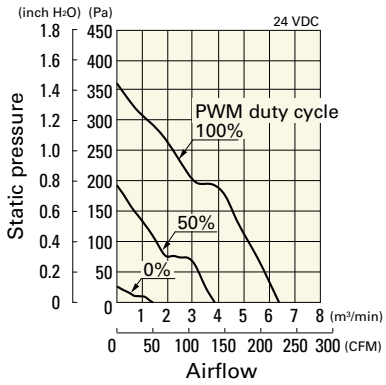

Operating voltage range

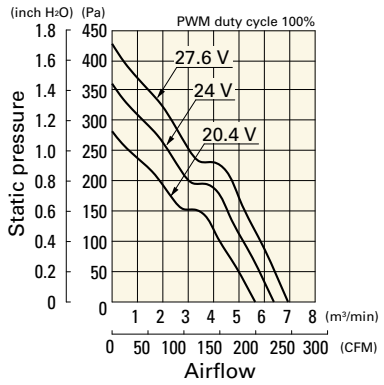

PWM duty - Speed characteristics example

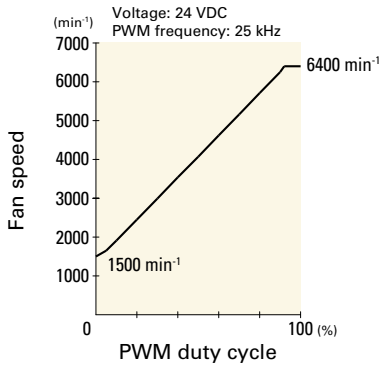

9WV1224P1H001 With pulse sensor with PWM control

PWM duty cycle

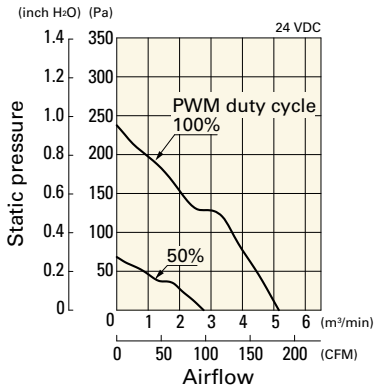

Operating voltage range

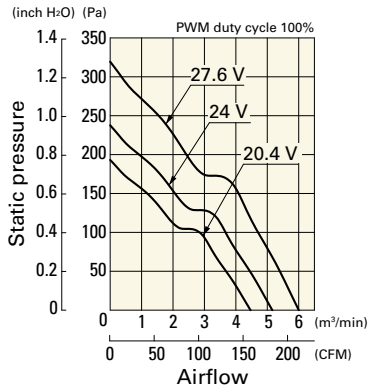

PWM duty - Speed characteristics example

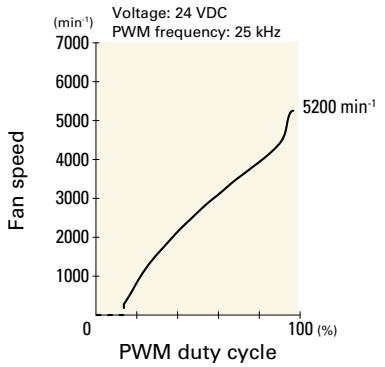

9WV1248P1J001 With pulse sensor with PWM control

PWM duty cycle

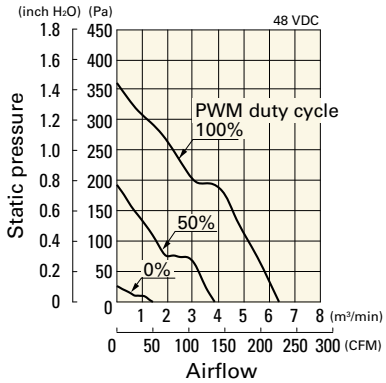

Operating voltage range

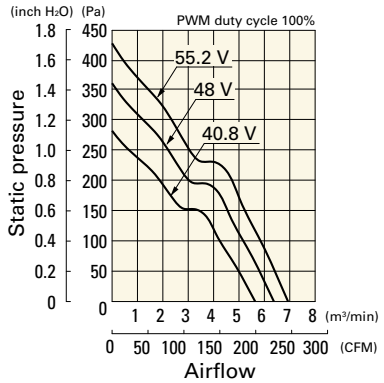

PWM duty - Speed characteristics example

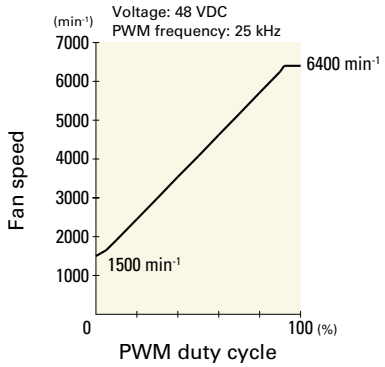

Dimensions (unit: mm)

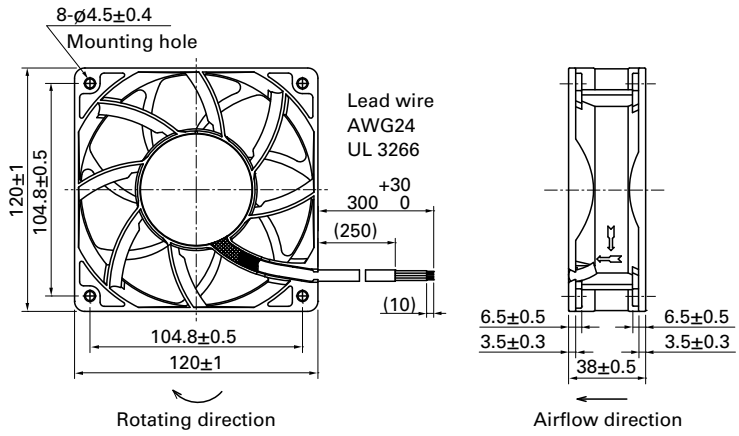

Reference Dimensions of Mounting Holes and Vent Opening (unit: mm)

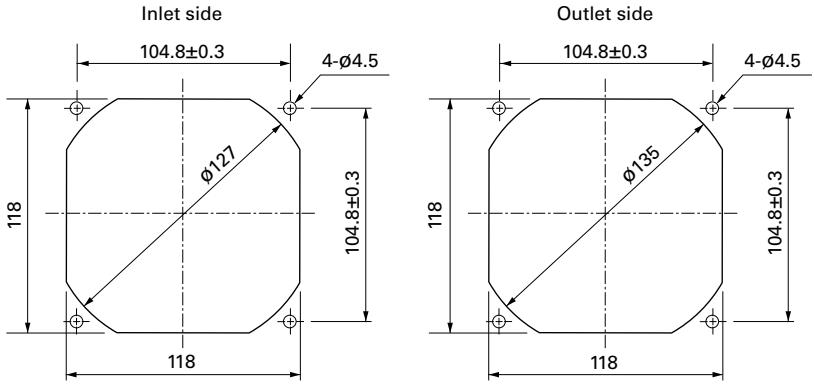

Options

Finger guards	page: p. 591
Model no.: 109-019E, 109-019K	

Resin finger guards	page: p. 597
Model no.: 109-1000G	

Splash Proof Fan

120×120×38 mm

IP55

San Ace 120W 9WG type

General Specifications

- Material ..... Frame: Aluminum (Black coating), Impeller: Plastic (Flammability: UL 94V-1)
- Expected life ..... See the table below. (L10 life: 90% survival rate for continuous operation in indoor free air at 60°C, rated voltage) Expected life at 40°C is for reference only.
- Motor protection function ..... Locked rotor burnout protection, Reverse polarity protection For details, please refer to p. 608.
- Dielectric strength ..... 50/60 Hz, 500 VAC, for 1 minute (between lead wire conductors and frame)
- Insulation resistance ..... 10 MΩ min. at 500 VDC (between lead wire conductors and frame)
- Sound pressure level (SPL) ..... A-weighted sound pressure level (SPL) at 1 m away from the air inlet.
- Storage temperature ..... -30 to +70˚C (Non-condensing)
- Lead wire ..... ⊕Red ⊖Black or Blue Sensor Yellow
- Mass ..... 410 g
- Ingress protection ..... IP55 For more information on IP rating, refer to p. 617.

Specifications

The models listed below **have ribs and a pulse sensor.**

Model no.	Rated voltage [V]	Operating voltage range [V]	Rated current [A]	Rated input [W]	Rated speed [min⁻¹]	Max. airflow [m³/min]	Max. airflow [CFM]	Max. static pressure [Pa]	Max. static pressure [inchH₂O]	SPL [dB (A)]	Operating temperature [˚C]	Expected life [h]
9WG1212G101-E	12	10.2 to 13.8	0.98	11.76	3600	3.88	137	135	0.542	49	-20 to +70	80000/60˚C (115000/40˚C)
9WG1212E101-E			0.61	7.32	3100	3.34	118	100	0.402	46		
9WG1212H101-E		7 to 13.8	0.38	4.56	2600	2.8	99	70.4	0.283	39		100000/60˚C (135000/40˚C)
9WG1212F101-E			0.28	3.36	2280	2.45	87	54.2	0.218	36		
9WG1212M101-E			0.21	2.52	1950	2.1	74	39.6	0.159	32		
9WG1224G101-E	24	20.4 to 27.6	0.5	12	3600	3.88	137	135	0.542	49		80000/60˚C (115000/40˚C)
9WG1224E101-E			0.34	8.16	3100	3.34	118	100	0.402	46		
9WG1224H101-E		14 to 27.6	0.22	5.28	2600	2.8	99	70.4	0.283	39		100000/60˚C (135000/40˚C)
9WG1224F101-E			0.16	3.84	2280	2.45	87	54.2	0.218	36		
9WG1224M101-E			0.11	2.64	1950	2.1	74	39.6	0.159	32		
9WG1248G101-E	48	40.8 to 55.2	0.25	12	3600	3.88	137	135	0.542	49		80000/60˚C (115000/40˚C)
9WG1248E101-E			0.17	8.16	3100	3.34	118	100	0.402	46		
9WG1248H101-E			0.11	5.28	2600	2.8	99	70.4	0.283	39		100000/60˚C (135000/40˚C)
9WG1248F101-E			0.09	4.32	2280	2.45	87	54.2	0.218	36		
9WG1248M101-E			0.07	3.36	1950	2.1	74	39.6	0.159	32		

Note: Sensor and control options are available for selection. Refer to the table on p. 650.

Airflow - Static Pressure Characteristics

9WG1212G101-E With pulse sensor

Operating voltage range

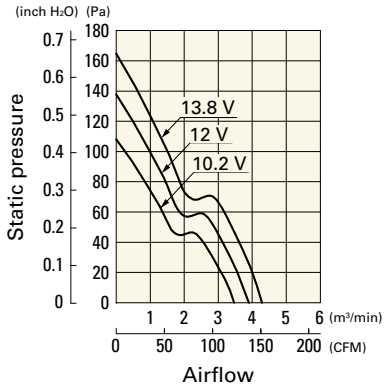

9WG1212E101-E With pulse sensor

Operating voltage range

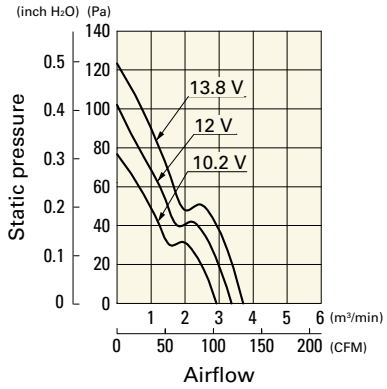

9WG1212H101-E With pulse sensor

Operating voltage range

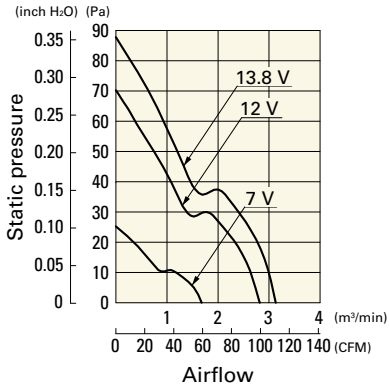

Airflow - Static Pressure Characteristics

9WG1212F101-E With pulse sensor

Operating voltage range

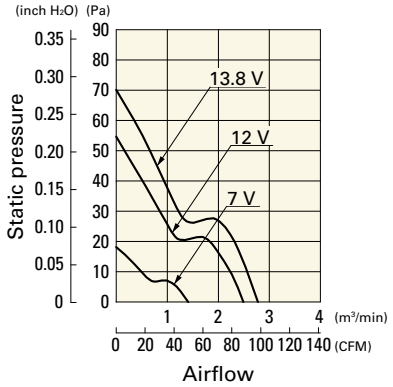

9WG1212M101-E With pulse sensor

Operating voltage range

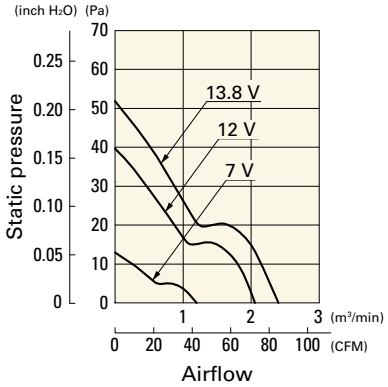

9WG1224G101-E With pulse sensor

Operating voltage range

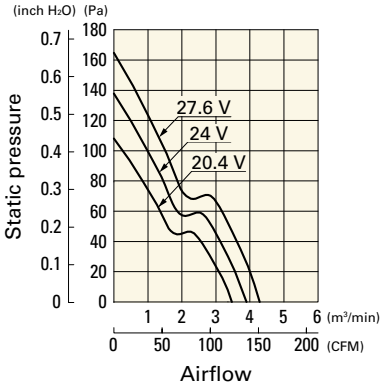

9WG1224E101-E With pulse sensor

Operating voltage range

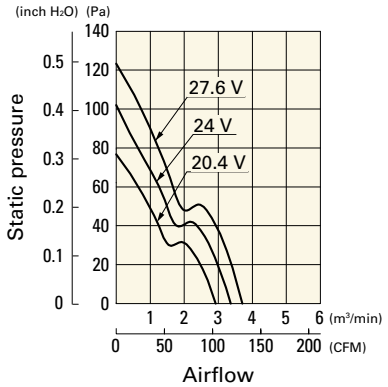

9WG1224H101-E With pulse sensor

Operating voltage range

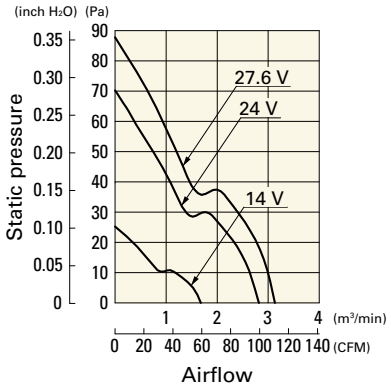

9WG1224F101-E With pulse sensor

Operating voltage range

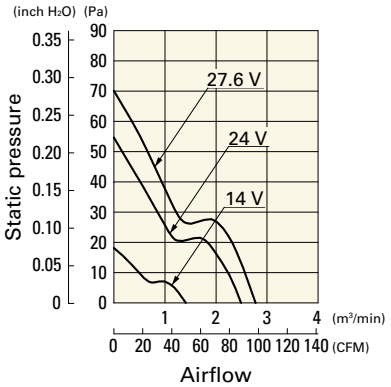

9WG1224M101-E With pulse sensor

Operating voltage range

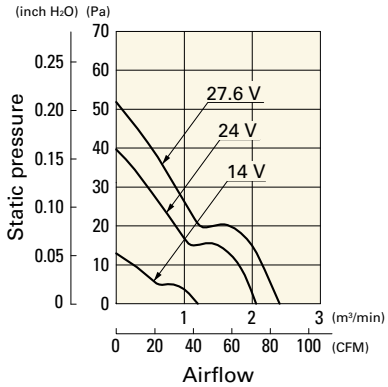

9WG1248G101-E With pulse sensor

Operating voltage range

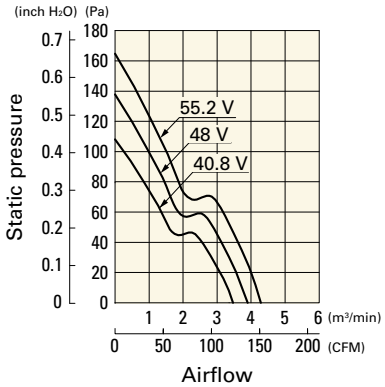

9WG1248E101-E With pulse sensor

Operating voltage range

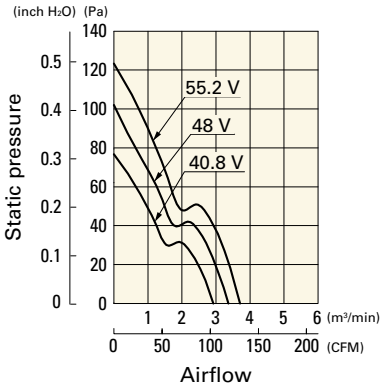

9WG1248H101-E With pulse sensor

Operating voltage range

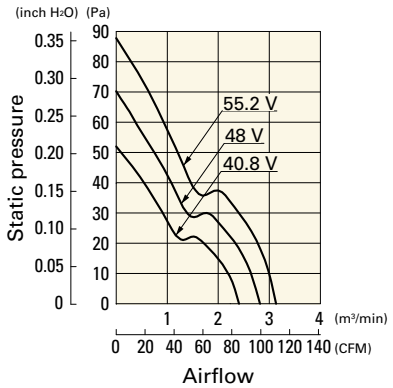

9WG1248F101-E With pulse sensor

Operating voltage range

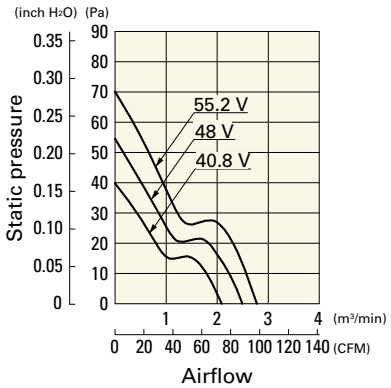

9WG1248M101-E With pulse sensor

Operating voltage range

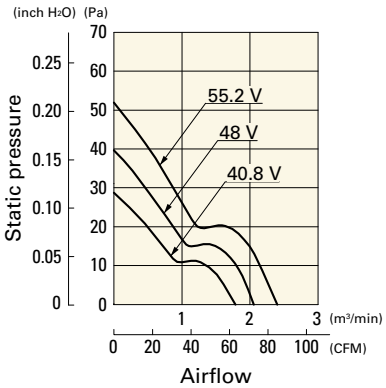

Dimensions (unit: mm)

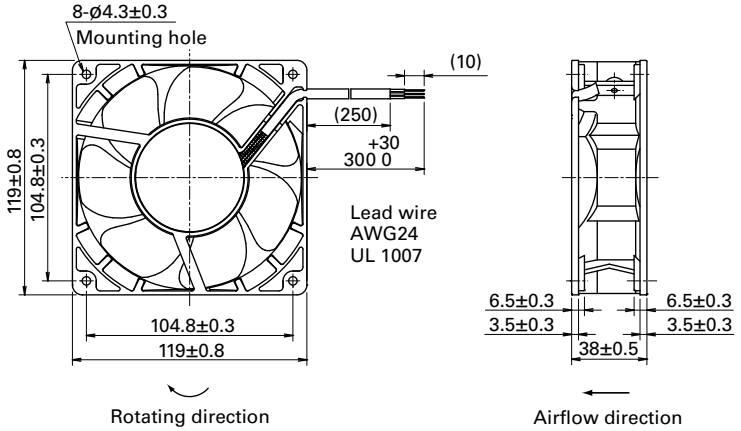

Reference Dimensions of Mounting Holes and Vent Opening (unit: mm)

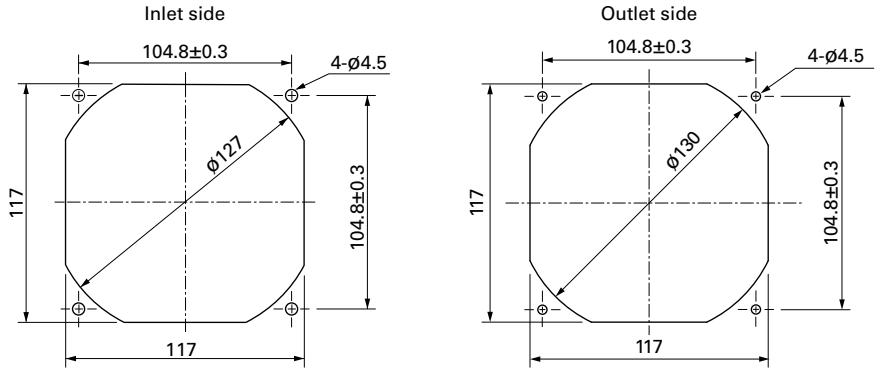

Options

Finger guards	page: p. 591

Model no.: 109-019E, 109-019K

Resin finger guards	page: p. 597

Model no.: 109-1000G

120×120×38 mm

IP68

San Ace 120W 9WP type

General Specifications

- Material ..... Frame: Plastic (Flammability: UL 94V-0), Impeller: Plastic (Flammability: UL 94V-1)
- Expected life ..... See the table below. (L10 life: 90% survival rate for continuous operation in indoor free air at 60°C, rated voltage) Expected life at 40°C is for reference only.
- Motor protection function ..... Locked rotor burnout protection, Reverse polarity protection For details, please refer to p. 608.
- Dielectric strength ..... 50/60 Hz, 500 VAC, for 1 minute (between lead wire conductors and frame)
- Insulation resistance ..... 10 MΩ min. at 500 VDC (between lead wire conductors and frame)
- Sound pressure level (SPL) ..... A-weighted sound pressure level (SPL) at 1 m away from the air inlet.
- Storage temperature ..... -30 to +70˚C (Non-condensing)
- Lead wire ..... ⊕Red ⊖Black Sensor Yellow
- Mass ..... 360 g
- Ingress protection ..... IP68 For more information on IP rating, refer to p. 617.

Specifications

The models listed below **have ribs and a pulse sensor.** For models without ribs, append "1" to the end of model numbers.

Model no.	Rated voltage [V]	Operating voltage range [V]	Rated current [A]	Rated input [W]	Rated speed [min⁻¹]	Max. airflow [m³/min]	Max. airflow [CFM]	Max. static pressure [Pa]	Max. static pressure [inchH₂O]	SPL [dB (A)]	Operating temperature [˚C]	Expected life [h]
9WP1212H101	12	7 to 13.8	0.38	4.56	2600	2.8	99	70.4	0.283	39	-20 to +70	40000/60˚C (70000/40˚C)
9WP1212M101			0.21	2.52	1950	2.1	74.2	39.6	0.159	32		
9WP1212L101		10.2 to 13.8	0.14	1.68	1500	1.62	57.2	23.4	0.094	26		
9WP1224H101	24	14 to 27.6	0.22	5.28	2600	2.8	99	70.4	0.283	39		
9WP1224M101			0.11	2.64	1950	2.1	74.2	39.6	0.159	32		
9WP1248H101	48	40.8 to 55.2	0.11	5.28	2600	2.8	99	70.4	0.283	39		
9WP1248M101			0.07	3.36	1950	2.1	74.2	39.6	0.159	32		

Note: Sensor and control options are available for selection. Refer to the table on p. 652.

Airflow - Static Pressure Characteristics

9WP1212H101 With pulse sensor

Operating voltage range

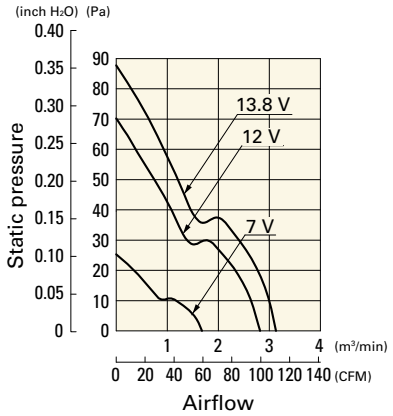

9WP1212M101 With pulse sensor

Operating voltage range

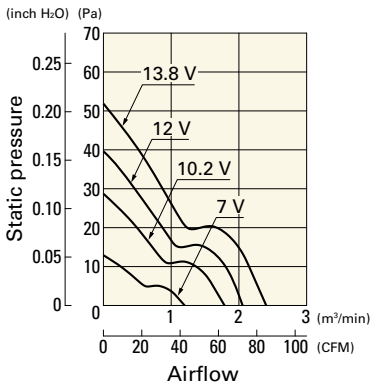

9WP1212L101 With pulse sensor

Operating voltage range

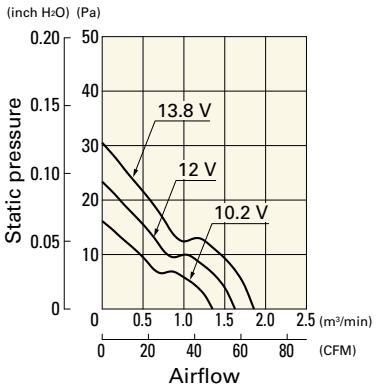

Airflow - Static Pressure Characteristics

9WP1224H101 With pulse sensor

Operating voltage range

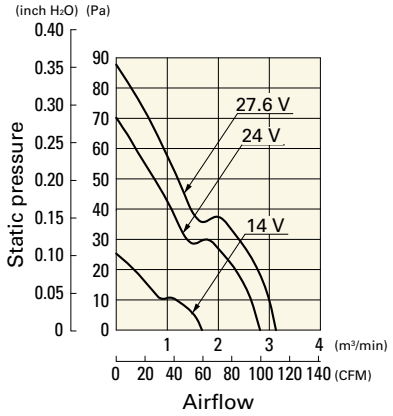

9WP1224M101 With pulse sensor

Operating voltage range

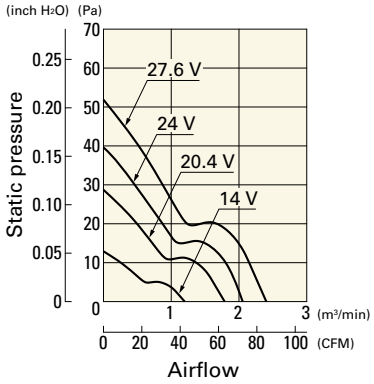

9WP1248H101 With pulse sensor

Operating voltage range

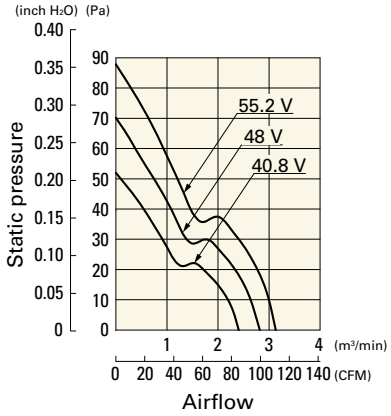

9WP1248M101 With pulse sensor

Operating voltage range

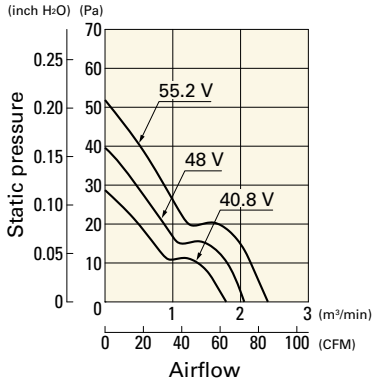

Dimensions (unit: mm) (With ribs)

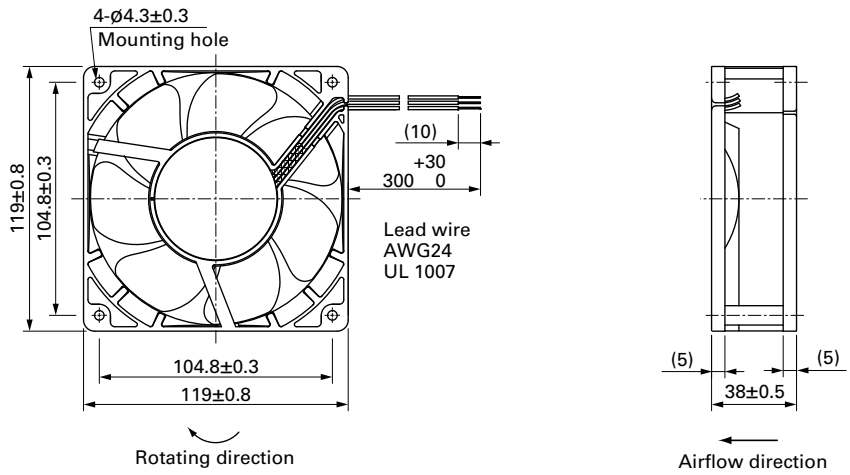

Reference Dimensions of Mounting Holes and Vent Opening (unit: mm)

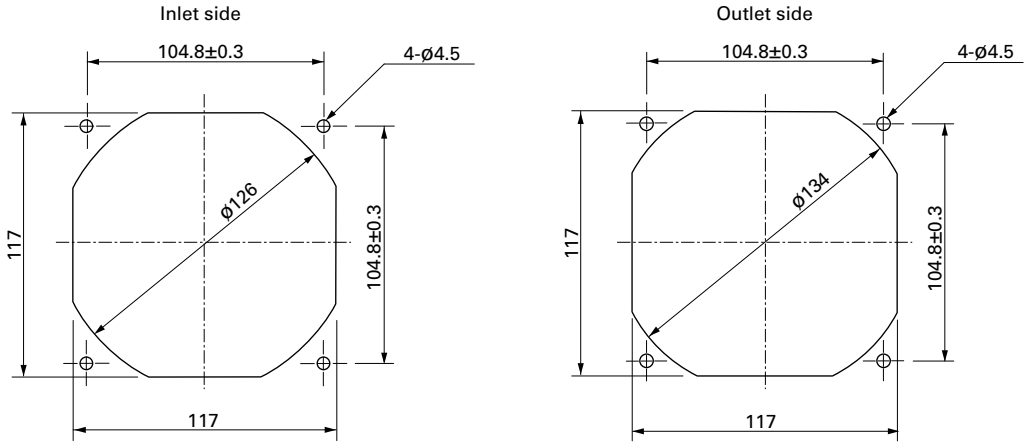

Options

Finger guards	page: p. 591
Model no.: 109-019E, 109-019K	

Resin finger guards	page: p. 597
Model no.: 109-1000G	

Splash Proof Fan

140×140×38 mm

San Ace 140W 9WL type

IP68

General Specifications

- Material ..... Frame: Aluminum (Black coating), Impeller: Plastic (Flammability: UL 94V-0)
- Expected life ..... See the table below. (L10 life: 90% survival rate for continuous operation in indoor free air at 60°C, rated voltage) Expected life at 40°C is for reference only.
- Motor protection function ..... Locked rotor burnout protection, Reverse polarity protection For details, please refer to p. 608.
- Dielectric strength ..... 50/60 Hz, 500 VAC, for 1 minute (between lead wire conductors and frame)
- Insulation resistance ..... 10 MΩ min. at 500 VDC (between lead wire conductors and frame)
- Sound pressure level (SPL) ..... A-weighted sound pressure level (SPL) at 1 m away from the air inlet.
- Storage temperature ..... -30 to +70˚C (Non-condensing)
- Lead wire ..... ⊕Red ⊖Black Sensor Yellow Control Brown (For models without PWM control, there is no speed control wiring.)
- Mass ..... 740 g
- Ingress protection ..... IP68 For more information on IP rating, refer to p. 617.

Specifications

The models listed below **have ribs and a pulse sensor with PWM control.**

Model no.	Rated voltage [V]	Operating voltage range [V]	PWM duty cycle* [%]	Rated current [A]	Rated input [W]	Rated speed [min⁻¹]	Max. airflow [m³/min]	Max. airflow [CFM]	Max. static pressure [Pa]	Max. static pressure [inchH₂O]	SPL [dB (A)]	Operating temperature [˚C]	Expected life [h]
9WL1412P1A001	12	10.2 to 13.8	100	3.72	44.64	6900	8.0	282	516	2.07	68	-20 to +70	100000/60˚C (135000/40˚C)
			20	0.27	3.24	2300	2.66	93	80	0.32	39		
9WL1412P1H001			100	1.7	20.4	5200	6.0	212	300	1.2	62		
			20	0.27	3.24	2300	2.66	93	80	0.32	39		
9WL1412P1M001			100	0.6	7.2	3300	3.7	130	170	0.68	46		
			20	0.16	1.92	1300	1.45	51	26	0.1	29		
9WL1424P1A001	24	20.4 to 27.6	100	1.86	44.64	6900	8.0	282	516	2.07	68		
			20	0.17	4.08	2300	2.66	93	80	0.32	39		
9WL1424P1H001			100	0.85	20.4	5200	6.0	212	300	1.2	62		
			20	0.16	3.84	2300	2.66	93	80	0.32	39		
9WL1424P1M001			100	0.3	7.2	3300	3.7	130	170	0.68	46		
			20	0.11	2.64	1300	1.45	51	26	0.1	29		
9WL1448P1A001	48	40.8 to 55.2	100	0.92	44.16	6900	8.0	282	516	2.07	68		
			20	0.11	5.28	2300	2.66	93	80	0.32	39		
9WL1448P1H001			100	0.42	20.16	5200	6.0	212	300	1.2	62		
			20	0.11	5.28	2300	2.66	93	80	0.32	39		
9WL1448P1M001			100	0.15	7.2	3300	3.7	130	170	0.68	46		
			20	0.09	4.32	1300	1.45	51	26	0.1	29		

PWM frequency is 25 kHz. Models without ratings for 0% PWM duty cycle have zero speed at 0%. When control terminal is open, speed is the same as at 100% duty cycle.

The models listed below **have ribs and a pulse sensor.**

Model no.	Rated voltage [V]	Operating voltage range [V]	Rated current [A]	Rated input [W]	Rated speed [min⁻¹]	Max. airflow [m³/min]	Max. airflow [CFM]	Max. static pressure [Pa]	Max. static pressure [inchH₂O]	SPL [dB (A)]	Operating temperature [˚C]	Expected life [h]
9WL1448L1001	48	40.8 to 55.2	0.11	5.3	2300	2.6	91.9	80	0.32	39	-20 to +70	100000/60˚C (135000/40˚C)

Note 1: Sensor and control options are available for selection. Refer to the table on p. 651.
Note 2: The mark indicates Short LeadTime Service applicable models. See p. 664 for details.

Airflow - Static Pressure Characteristics / PWM Duty - Speed Characteristics Example

9WL1412P1A001 With pulse sensor with PWM control

PWM duty cycle

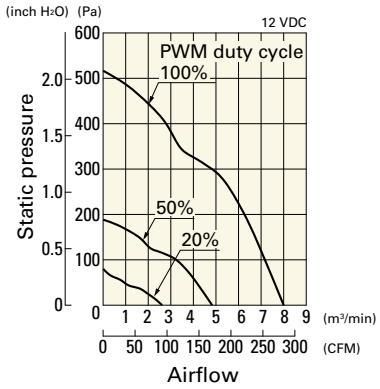

Operating voltage range

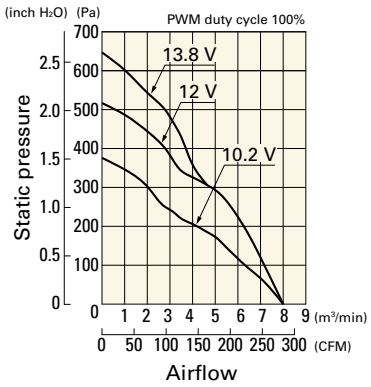

PWM duty - Speed characteristics example

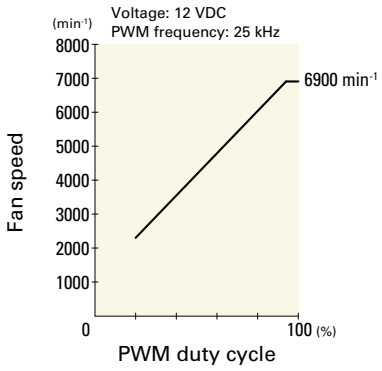

9WL1412P1H001 With pulse sensor with PWM control

PWM duty cycle

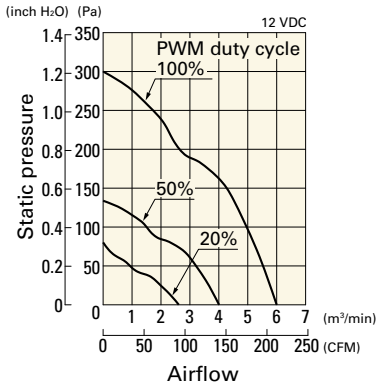

Operating voltage range

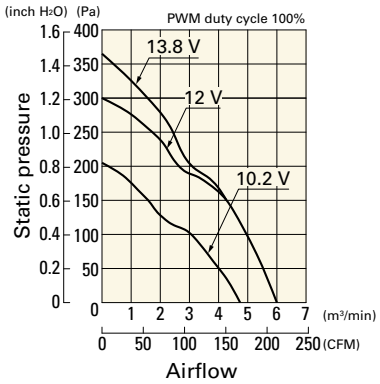

PWM duty - Speed characteristics example

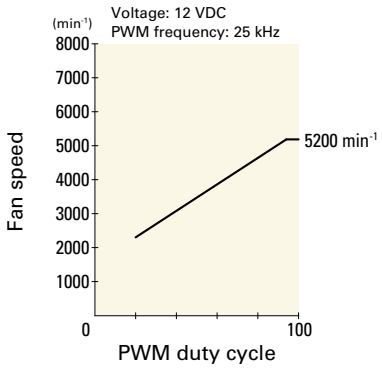

9WL1412P1M001 With pulse sensor with PWM control

PWM duty cycle

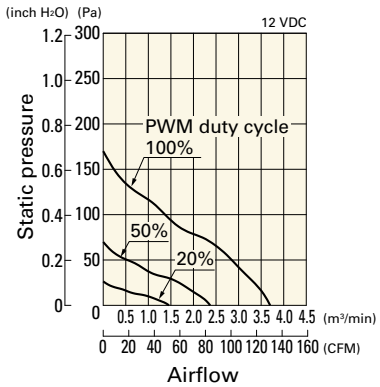

Operating voltage range

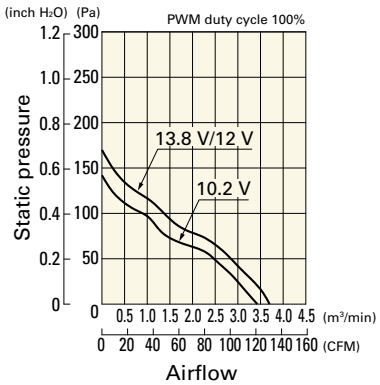

PWM duty - Speed characteristics example

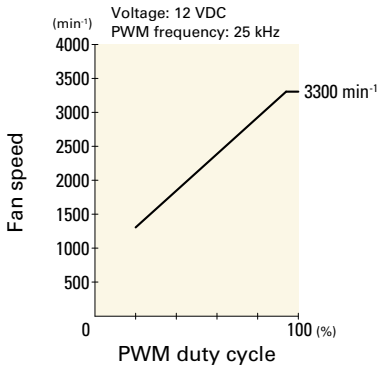

9WL1424P1A001 With pulse sensor with PWM control

PWM duty cycle

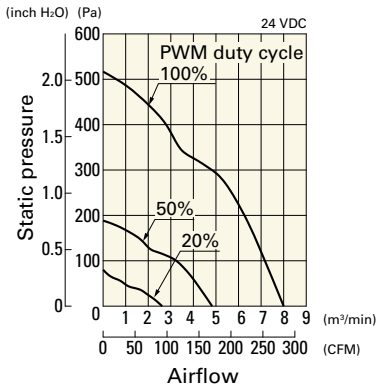

Operating voltage range

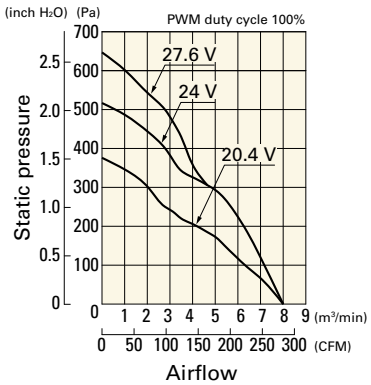

PWM duty - Speed characteristics example

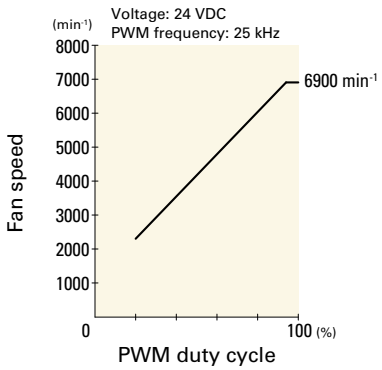

Airflow - Static Pressure Characteristics / PWM Duty - Speed Characteristics Example

9WL1424P1H001 With pulse sensor with PWM control

PWM duty cycle

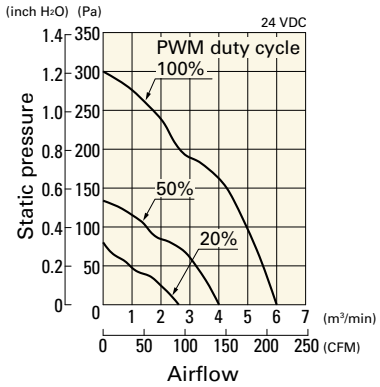

Operating voltage range

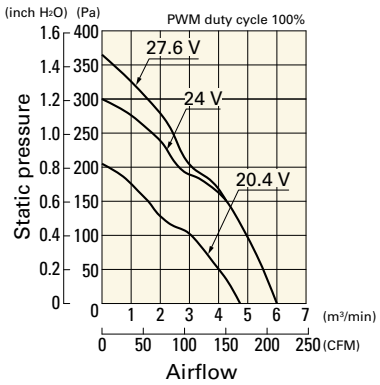

PWM duty - Speed characteristics example

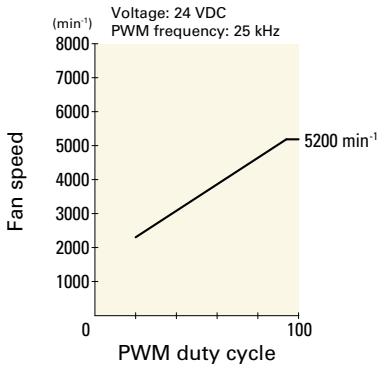

9WL1424P1M001 With pulse sensor with PWM control

PWM duty cycle

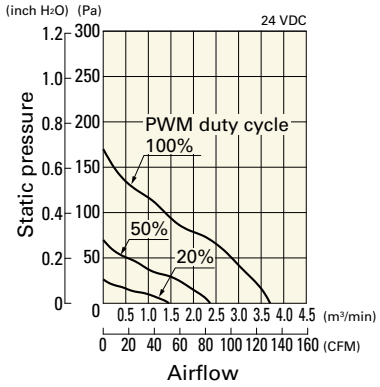

Operating voltage range

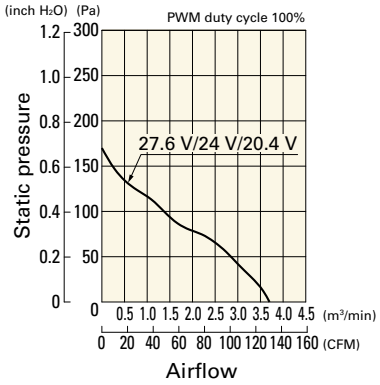

PWM duty - Speed characteristics example

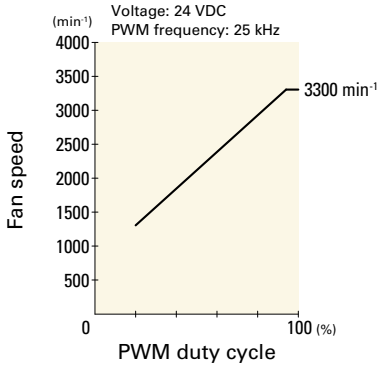

9WL1448P1A001 With pulse sensor with PWM control

PWM duty cycle

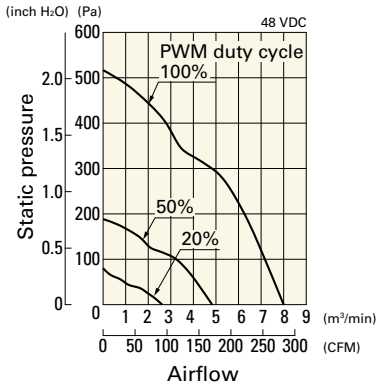

Operating voltage range

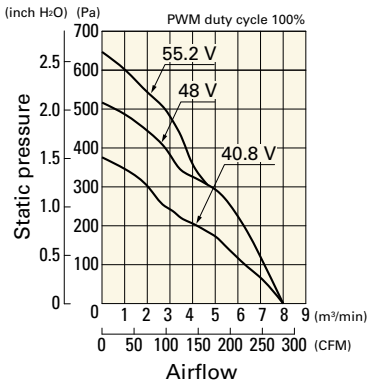

PWM duty - Speed characteristics example

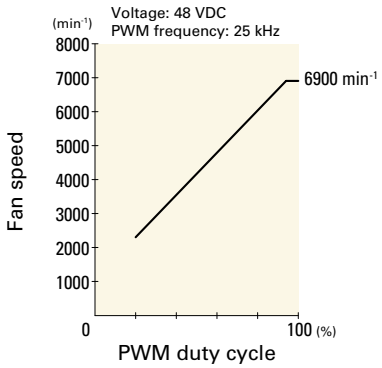

9WL1448P1H001 With pulse sensor with PWM control

PWM duty cycle

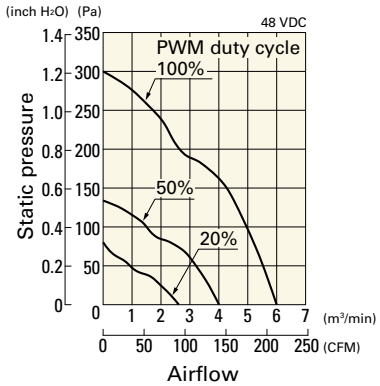

Operating voltage range

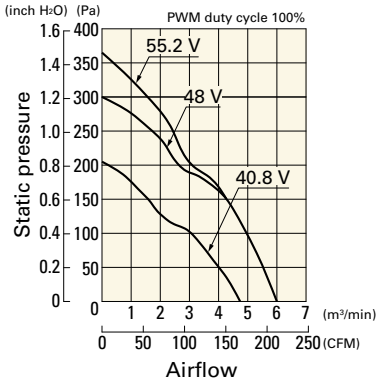

PWM duty - Speed characteristics example

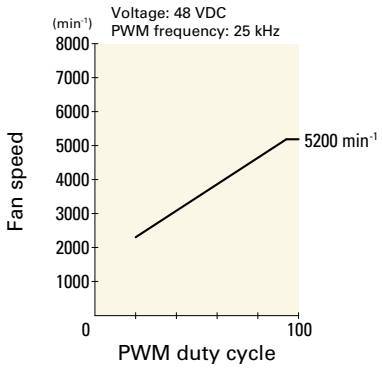

Airflow - Static Pressure Characteristics / PWM Duty - Speed Characteristics Example

9WL1448P1M001 With pulse sensor with PWM control

PWM duty cycle

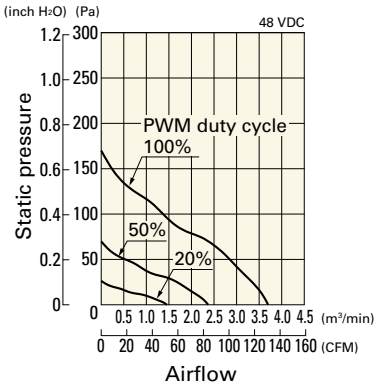

Operating voltage range

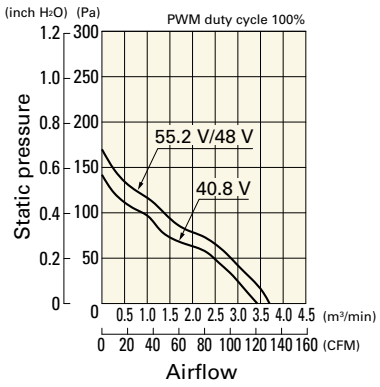

PWM duty - Speed characteristics example

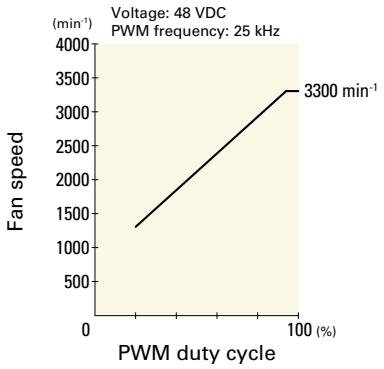

Airflow - Static Pressure Characteristics

9WL1448L1001 With pulse sensor

Operating voltage range

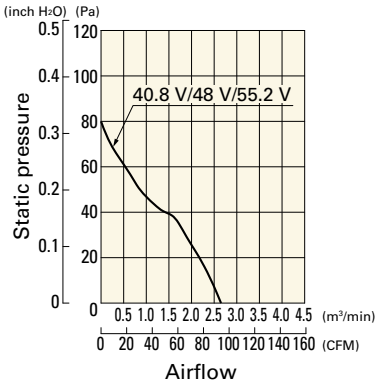

Dimensions (unit: mm) (With pulse sensor with PWM control)

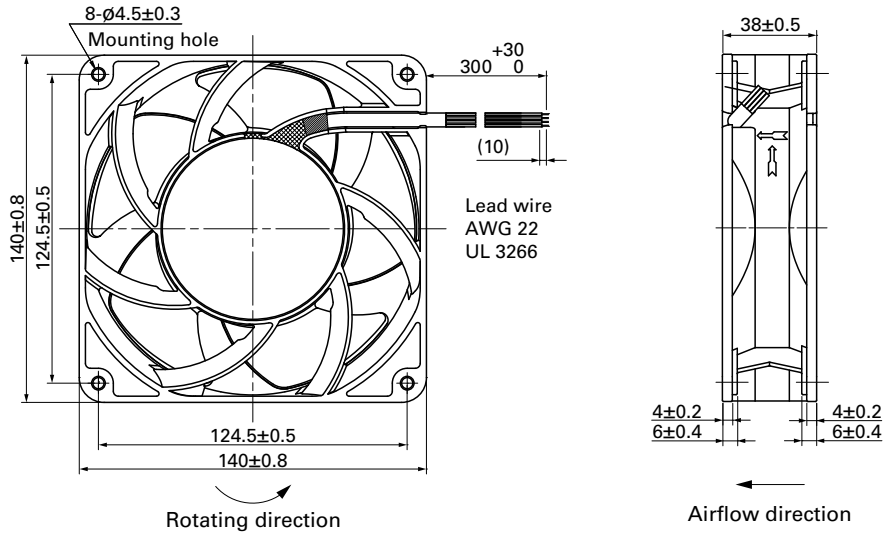

Reference Dimensions of Mounting Holes and Vent Opening (unit: mm)

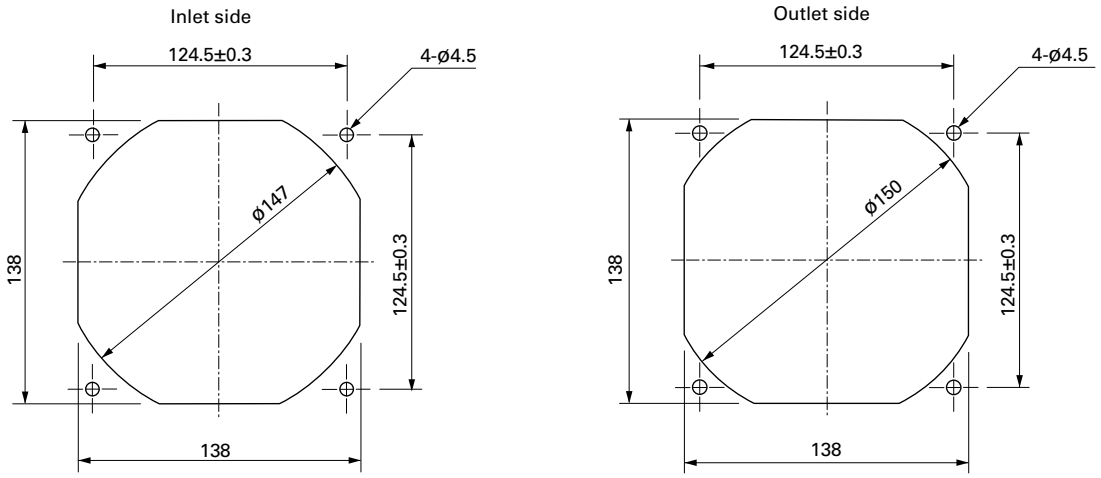

Options

Finger guards page: p. 591

Model no.: 109-719, 109-719H

Errata sheet

140×140×51 mm

IP68

San Ace 140W 9WL type

General Specifications

- Material ..... Frame: Aluminum (Black coating), Impeller: Plastic (Flammability: UL 94V-0)
- Expected life ..... See the table below. (L10 life: 90% survival rate for continuous operation in indoor free air at 60°C, rated voltage) Expected life at 40°C is for reference only.
- Motor protection function ..... Locked rotor burnout protection, Reverse polarity protection For details, please refer to p. 608.
- Dielectric strength ..... 50/60 Hz, 500 VAC, for 1 minute (between lead wire conductors and frame)
- Insulation resistance ..... 10 MΩ min. at 500 VDC (between lead wire conductors and frame)
- Sound pressure level (SPL) ..... A-weighted sound pressure level (SPL) at 1 m away from the air inlet.
- Storage temperature ..... -30 to +70°C (Non-condensing)
- Lead wire ..... ⊕Red ⊖Black Sensor Yellow Control Brown (For models without PWM control, there is no speed control wiring.)
- Mass ..... 930 g
- Ingress protection ..... IP68 For more information on IP rating, refer to p. 617.

Specifications

The models listed below **have ribs and a pulse sensor with PWM control.**

Model no.	Rated voltage [V]	Operating voltage range [V]	PWM duty cycle* [%]	Rated current [A]	Rated input [W]	Rated speed [min⁻¹]	Max. airflow [m³/min]	Max. airflow [CFM]	Max. static pressure [Pa]	Max. static pressure [inchH₂O]	SPL [dB (A)]	Operating temperature [°C]	Expected life [h]
9WL1412P5G001	12	10.2 to 13.8	100	5.16	62	7500	9.0	318	655	2.63	69	-20 to +70	100000/60°C (135000/40°C)
			20	0.31	3.72	2300	2.75	97	80	0.32	38		
9WL1412P5S001			100	1.83	22	5000	6.0	212	295	1.18	57		
			20	0.31	3.72	2300	2.75	97	80	0.32	38		
9WL1424P5G001	24	20.4 to 27.6	100	2.58	62	7500	9.0	318	655	2.63	69		
			20	0.16	3.84	2300	2.75	97	80	0.32	38		
9WL1424P5S001			100	0.91	22	5000	6.0	212	295	1.18	57		
			20	0.16	3.84	2300	2.75	97	80	0.32	38		
9WL1448P5G001	48	40.8 to 55.2	100	1.29	62	7500	9.0	318	655	2.63	69		
			20	0.12	5.76	2300	2.75	97	80	0.32	38		
9WL1448P5S001			100	0.45	22	5000	6.0	212	295	1.18	57		
			20	0.12	5.76	2300	2.75	97	80	0.32	38		

PWM frequency is 25 kHz. Models without ratings for 0% PWM duty cycle have zero speed at 0%. When control terminal is open, speed is the same as at 100% duty cycle.

The models listed below **have ribs and a pulse sensor.**

Model no.	Rated voltage [V]	Operating voltage range [V]	Rated current [A]	Rated input [W]	Rated speed [min⁻¹]	Max. airflow [m³/min]	Max. airflow [CFM]	Max. static pressure [Pa]	Max. static pressure [inchH₂O]	SPL [dB (A)]	Operating temperature [°C]	Expected life [h]
9WL1412A5001	12	10.2 to 13.8	2.61	31.4	5700	6.9	243.8	500	2	61	-20 to +70	100000/60°C (135000/40°C)
9WL1412H5001			1	12	4100	4.9	173.1	260	1.04	52		
9WL1412M5001			0.43	5.16	2600	3.1	109.5	100	0.4	40		
9WL1424A5001	24	20.4 to 27.6	1.21	29.10	5700	6.9	243.8	540	2.17	61		
9WL1424H5001			0.55	13.2	4100	4.9	173.1	260	1.04	52		
9WL1424M5001			0.23	5.52	2600	3.1	109.5	100	0.4	40		
9WL1448A5001	48	40.8 to 55.2	0.66	31.7	5700	6.9	243.8	540	2.17	61		
9WL1448H5001			0.31	14.9	4100	4.9	173.1	260	1.04	52		
9WL1448M5001			0.15	7.2	2600	3.1	109.5	100	0.4	40		

Note 1: Sensor and control options are available for selection. Refer to the table on p. 651.
Note 2: The mark indicates Short LeadTime Service applicable models. See p. 664 for details.

Airflow - Static Pressure Characteristics / PWM Duty - Speed Characteristics Example

9WL1412P5G001 With pulse sensor with PWM control

PWM duty cycle

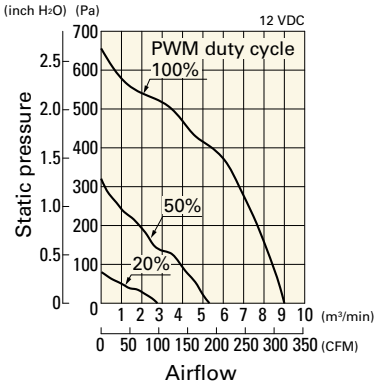

Operating voltage range

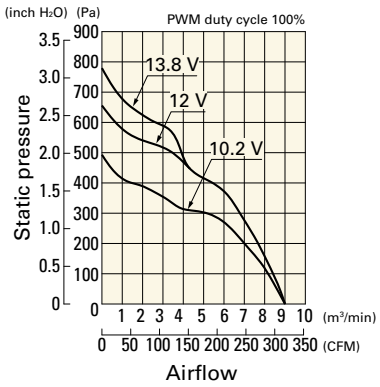

PWM duty - Speed characteristics example

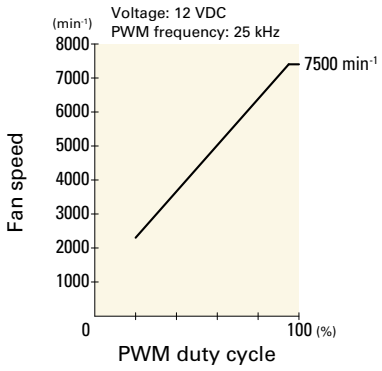

9WL1412P5S001 With pulse sensor with PWM control

PWM duty cycle

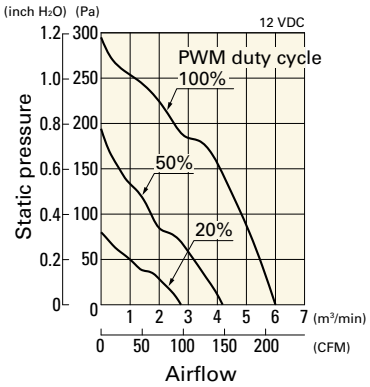

Operating voltage range

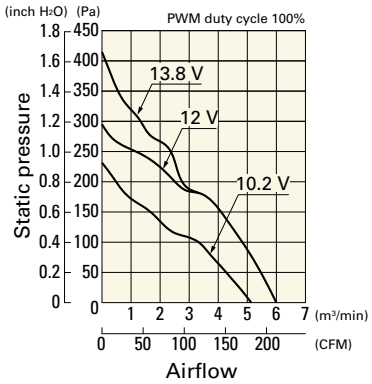

PWM duty - Speed characteristics example

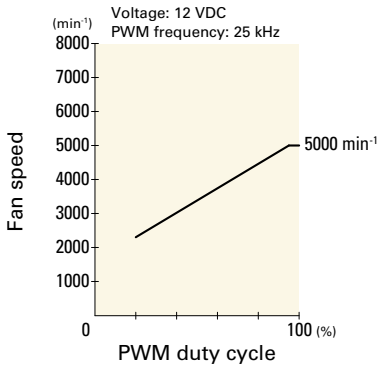

9WL1424P5G001 With pulse sensor with PWM control

PWM duty cycle

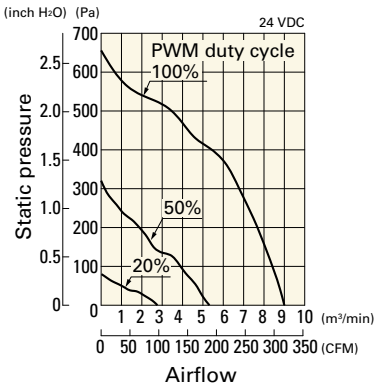

Operating voltage range

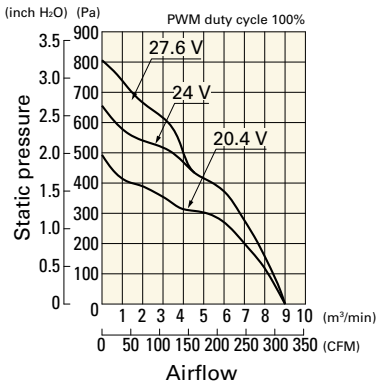

PWM duty - Speed characteristics example

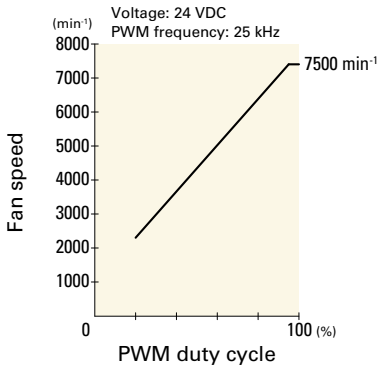

9WL1424P5S001 With pulse sensor with PWM control

PWM duty cycle

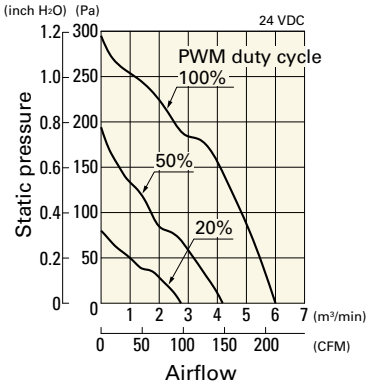

Operating voltage range

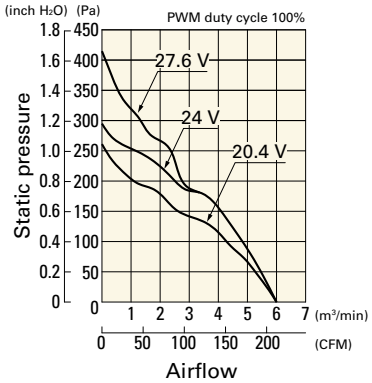

PWM duty - Speed characteristics example

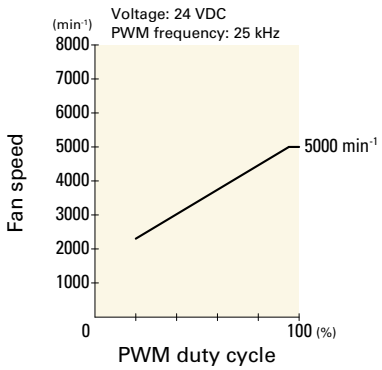

Airflow - Static Pressure Characteristics / PWM Duty - Speed Characteristics Example

9WL1448P5G001 With pulse sensor with PWM control

PWM duty cycle

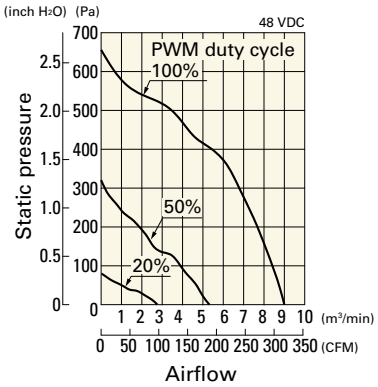

Operating voltage range

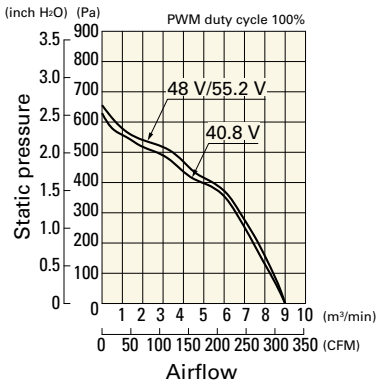

PWM duty - Speed characteristics example

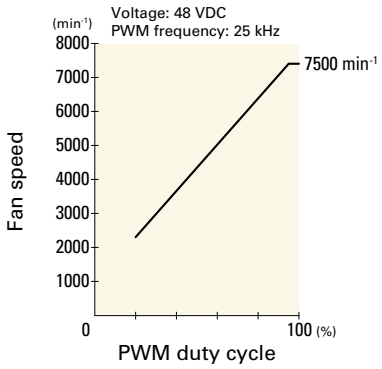

9WL1448P5S001 With pulse sensor with PWM control

PWM duty cycle

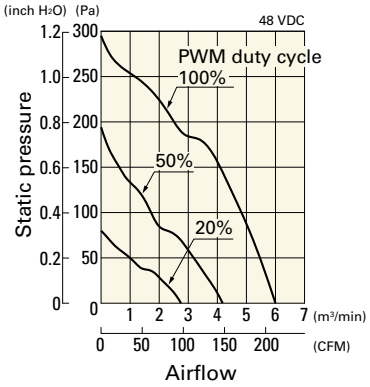

Operating voltage range

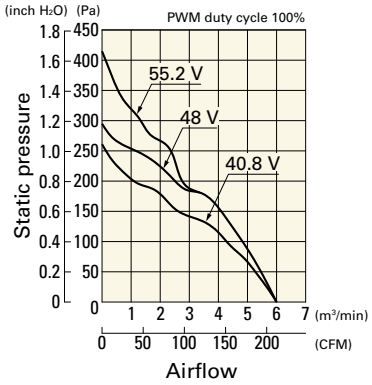

PWM duty - Speed characteristics example

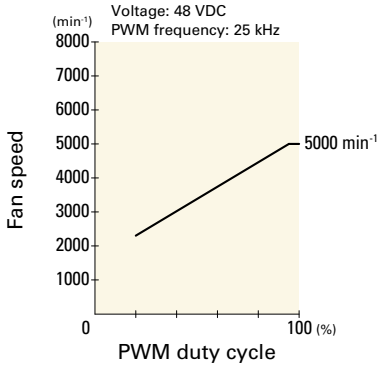

Airflow - Static Pressure Characteristics

9WL1412A5001 With pulse sensor

Operating voltage range

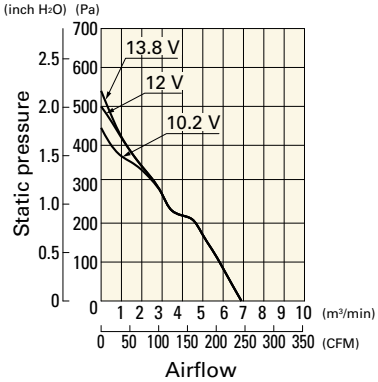

9WL1412H5001 With pulse sensor

Operating voltage range

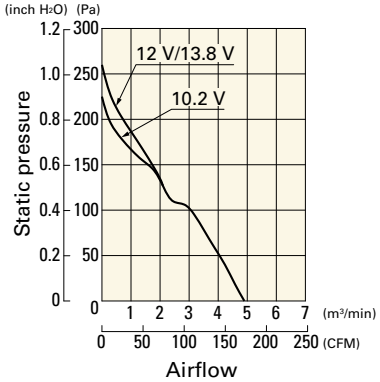

9WL1412M5001 With pulse sensor

Operating voltage range

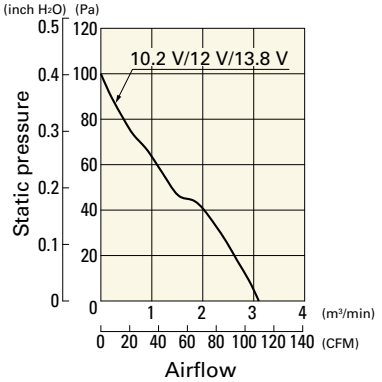

Airflow - Static Pressure Characteristics

9WL1424A5001 With pulse sensor

Operating voltage range

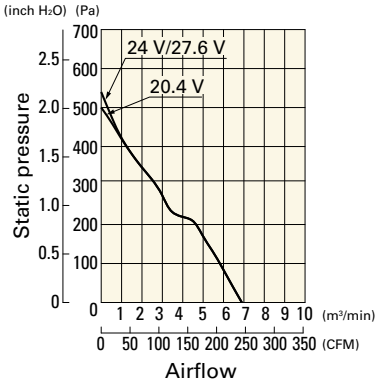

9WL1424H5001 With pulse sensor

Operating voltage range

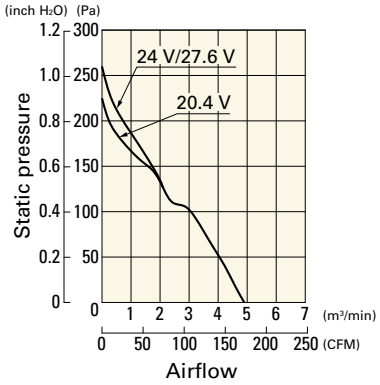

9WL1424M5001 With pulse sensor

Operating voltage range

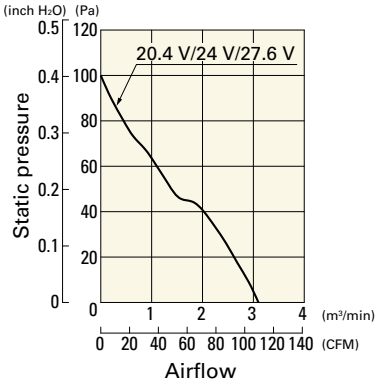

9WL1448A5001 With pulse sensor

Operating voltage range

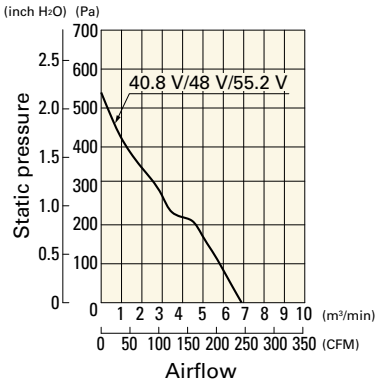

9WL1448H5001 With pulse sensor

Operating voltage range

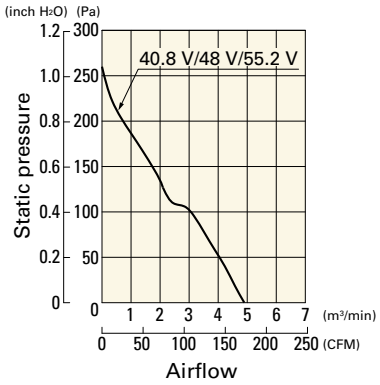

9WL1448M5001 With pulse sensor

Operating voltage range

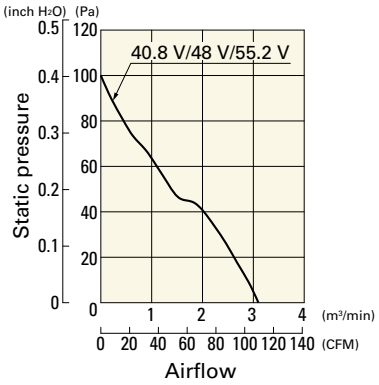

Dimensions (unit: mm) (With pulse sensor with PWM control)

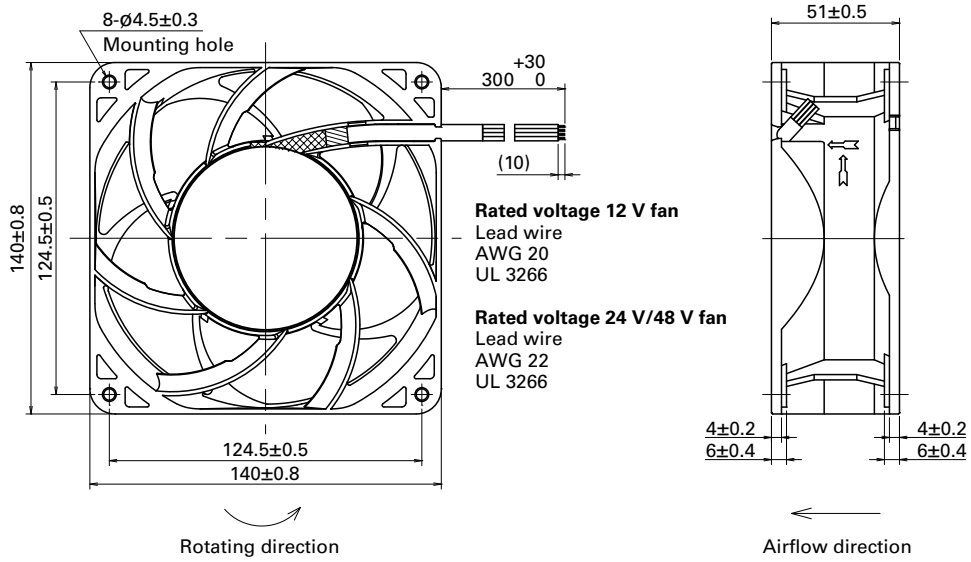

Rated voltage 12 V fan
Lead wire
AWG 20
UL 3266

Rated voltage 24 V/48 V fan
Lead wire
AWG 22
UL 3266

Reference Dimensions of Mounting Holes and Vent Opening (unit: mm)

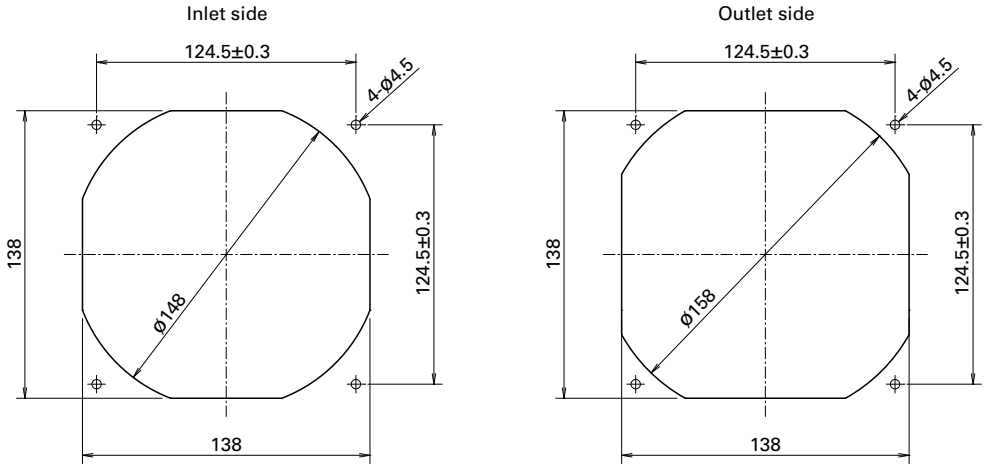

Options

Finger guards page: p. 591

Model no.: 109-719, 109-719H

Splash Proof Fan

ø172×150×51 mm

IP68

San Ace 172W 9WG type

Sidecut type

General Specifications

- Material ..... Frame: Aluminum (Black coating), Impeller: Plastic (Flammability: UL 94V-1)
- Expected life ..... See the table below. (L10 life: 90% survival rate for continuous operation in indoor free air at 60°C, rated voltage) Expected life at 40°C is for reference only.
- Motor protection function ..... Locked rotor burnout protection, Reverse polarity protection For details, please refer to p. 608.
- Dielectric strength ..... 50/60 Hz, 500 VAC, for 1 minute (between lead wire conductors and frame)
- Insulation resistance ..... 10 MΩ min. at 500 VDC (between lead wire conductors and frame)
- Sound pressure level (SPL) ..... A-weighted sound pressure level (SPL) at 1 m away from the air inlet.
- Storage temperature ..... -30 to +70°C (Non-condensing)
- Lead wire ..... ⊕Red ⊖Black Sensor Yellow Control Brown
- Mass ..... 860 g
- Ingress protection ..... IP68 For more information on IP rating, refer to p. 617.

Specifications

The models listed below **have ribs and a pulse sensor with PWM control.**

Model no.	Rated voltage [V]	Operating voltage range [V]	PWM duty cycle* [%]	Rated current [A]	Rated input [W]	Rated speed [min⁻¹]	Max. airflow [m³/min]	Max. airflow [CFM]	Max. static pressure [Pa]	Max. static pressure [inchH₂O]	SPL [dB (A)]	Operating temperature [°C]	Expected life [h]
9WG5748P5G001	48	40.8 to 55.2	100	2.91	140.0	8600	15.46	546	1000	4.02	78	-20 to +70	40000/60°C (70000/40°C)
			0	0.21	10.1	2000	3.59	127	75.1	0.3	40		
9WG5748P5H001			100	1.62	78.0	6500	11.6	410	770	3.09	71		
			0	0.21	10.1	2000	3.59	127	75.1	0.3	40		

PWM frequency is 25 kHz. Models without ratings for 0% PWM duty cycle have zero speed at 0%. When control terminal is open, speed is the same as at 100% duty cycle.

Note 1: Sensor and control options are available for selection. Refer to the table on p. 650.
Note 2: The » mark indicates Short LeadTime Service applicable models. See p. 664 for details.

Airflow - Static Pressure Characteristics / PWM Duty - Speed Characteristics Example

9WG5748P5G001 With pulse sensor with PWM control

PWM duty cycle

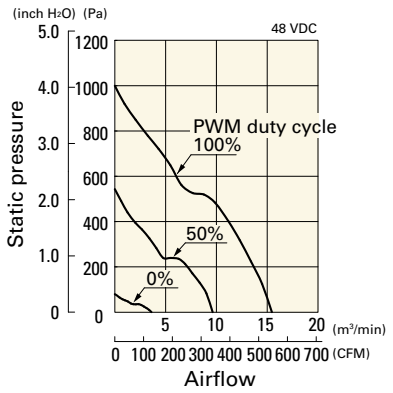

Operating voltage range

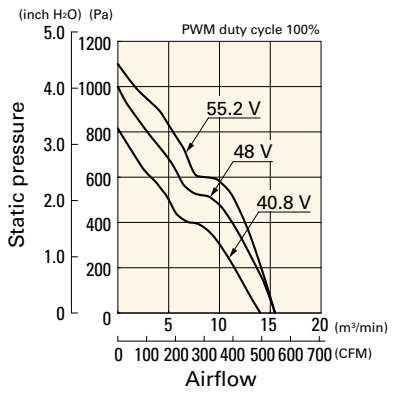

PWM duty - Speed characteristics example

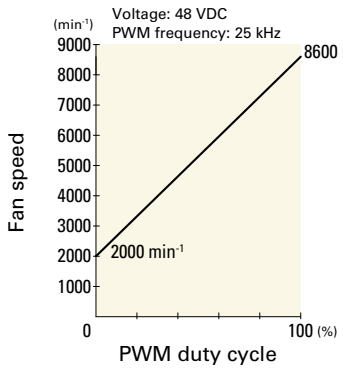

Airflow - Static Pressure Characteristics / PWM Duty - Speed Characteristics Example

9WG5748P5H001 With pulse sensor with PWM control

PWM duty cycle

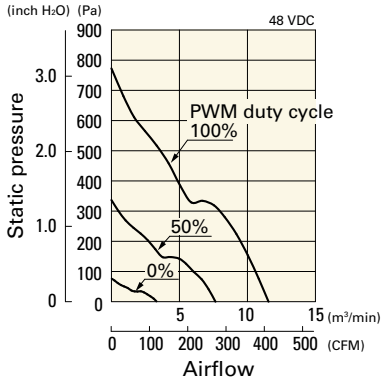

Operating voltage range

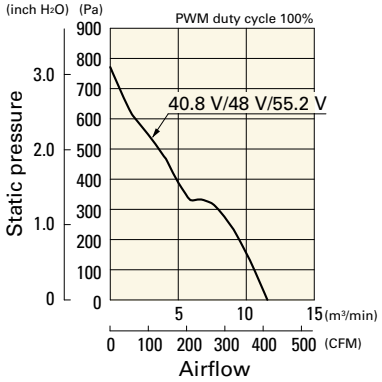

PWM duty - Speed characteristics example

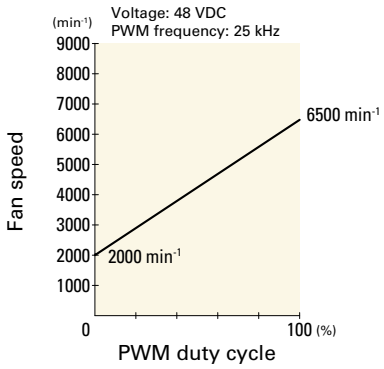

Dimensions (unit: mm)

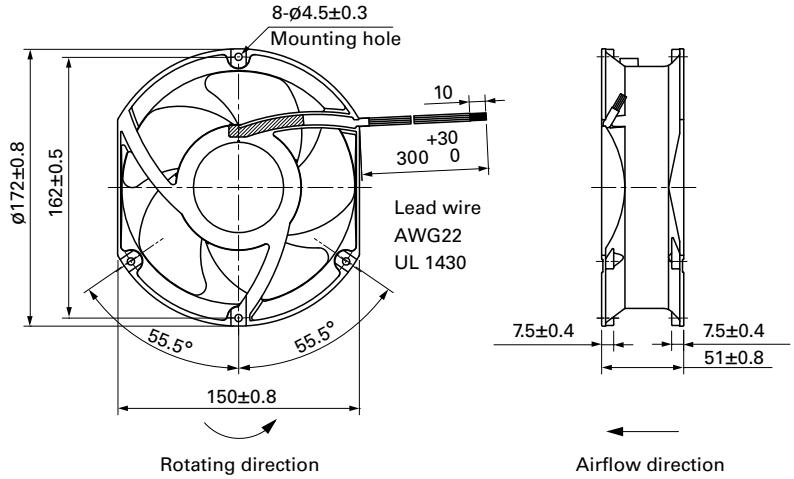

Reference Dimensions of Mounting Holes and Vent Opening (unit: mm)

Inlet side, Outlet side

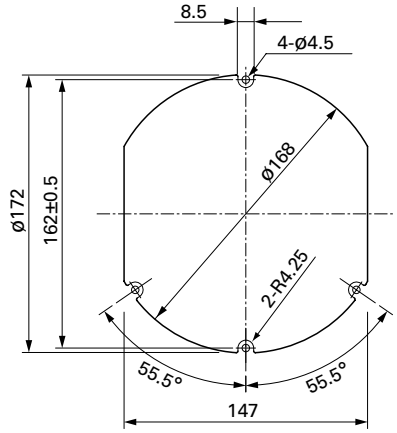

Options

Finger guards page: p. 592

Model no.: 109-1155

Splash Proof Centrifugal Fan

Centrifugal fans of IP54 and IP56 waterproof capability. For more information on IP rating, refer to p. 617.
Related product: Splash Proof Fan p. 255, Centrifugal Fan p. 437, Splash Proof Blower p. 341, Oil Proof Fan p. 345

Model Numbering System

Not every combination of the following codes or characters is available. Contact us for an available combination.

9W1T	M	48	P	4	H	01
Type name	Impeller size	Voltage	PWM control	Thickness	Speed code	Individual customer's spec (2 to 3 digits)

Bracket-mounted Splash Proof Centrifugal Fan

9B1W2T	P	24	P	0	H	001
Type name	Impeller size	Voltage	PWM control	Thickness	Speed code	Individual customer's spec (3 digits)

Type name	9W1T 9W2T 9B1W2T
Impeller size (mm)	G ø175, J ø133, M ø100, N ø150, P ø221, S ø225
Voltage (V)	24 48 24 48
Thickness (mm)	0: 69 min., 1: 35, 4: 25
Speed code	H G S etc.

How to Read Specifications (DC fan)

The following is a sample. See respective product pages for detailed information.

Model no.	Rated voltage [V]	Operating voltage range [V]	Rated current [A]	Rated input [W]	Rated speed [min⁻¹]	Max. airflow [m³/min]	Max. airflow [CFM]	Max. static pressure [Pa]	Max. static pressure [inchH₂O]	SPL [dB (A)]	Operating temperature [°C]	Expected life [h]
9GA0412G7001	12	7 to 13.8	0.17	2.04	13100	0.36	12.7	192	0.77	42	-20 to +70	40000/60°C (70000/40°C)

Rated voltage ····· This is the necessary voltage to drive the fan. E.g.) 12 VDC, 24 VDC, 48 VDC
Operating voltage range ····· The voltage range over which fan operation is guaranteed.
Rated current ····· The current when the fan is operating at rated voltage (at free air).
Rated input ····· The power value when the fan is operating at rated voltage (at free air).
Rated speed ····· The speed when the fan is operating at rated voltage (at free air).
Max. airflow ····· The airflow at 0 Pa static pressure when the fan is operating at rated voltage. (Measured using the double chamber method)
Max. static pressure ····· The static pressure at 0 m³/min airflow when the fan is operating at rated voltage. (Measured using the double chamber method)
SPL ····· A-weighted sound pressure level (SPL) when the fan operates at the rated speed.
For the measurement method, see the Technical Materials section in the catalog.
Operating temperature ····· The temperature range over which fan operation is guaranteed (Non-condensing).
Expected life ····· Service life hours that 90% of bearings will survive without failing when continuously operated at the rated voltage and 60°C temperature. Expected life at 40°C is for reference only.
For more information, please refer to the technical material section.

Errata sheet

ø100×25 mm

IP68

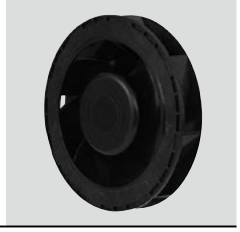

San Ace 100W 9W2TM type

General Specifications

- Material ..... Motor case: Aluminum (Black coating), Impeller: Plastic (Flammability: UL 94V-0)
- Expected life ..... See the table below. (L10 life: 90% survival rate for continuous operation in indoor free air at 60°C, rated voltage) Expected life at 40°C is for reference only.
- Motor protection function ..... Locked rotor burnout protection, Reverse polarity protection For details, please refer to p. 608.
- Dielectric strength ..... 50/60 Hz, 500 VAC, for 1 minute (between lead wire conductors and motor case)
- Insulation resistance ..... 10 MΩ min. at 500 VDC (between lead wire conductors and motor case)
- Sound pressure level (SPL) ..... A-weighted sound pressure level (SPL) at 1 m away from the air inlet.
- Storage temperature ..... -30 to +70°C (Non-condensing)
- Lead wire ..... ⊕Red ⊖Black Sensor Yellow Control Brown
- Mass ..... 190 g
- Ingress protection ..... IP68 For more information on IP rating, refer to p. 617.

Specifications

When the optional inlet nozzle (109-1080H) is mounted.

The models listed below **have ribs and a pulse sensor with PWM control.**

Model no.	Rated voltage [V]	Operating voltage range [V]	PWM duty cycle* [%]	Rated current [A]	Rated input [W]	Rated speed [min⁻¹]	Max. airflow [m³/min]	Max. airflow [CFM]	Max. static pressure [Pa]	Max. static pressure [inchH₂O]	SPL [dB (A)]	Operating temperature [°C]	Expected life [h]
9W2TM24P4G001	24	18 to 27.6	100	0.7	16.8	7400	2.03	71.7	708	2.84	65	-20 to +70	40000/60°C (70000/40°C)
			20	0.04	0.96	1500	0.39	14	30	0.12	31		
9W2TM24P4H001			100	0.44	10.56	6400	1.77	62.5	560	2.25	60		
			20	0.04	0.96	1500	0.39	14	30	0.12	31		
9W2TM48P4G001	48	36 to 60	100	0.35	16.8	7400	2.03	71.7	708	2.84	65		
			20	0.04	1.92	1500	0.39	14	30	0.12	31		
9W2TM48P4H001			100	0.22	10.56	6400	1.77	62.5	560	2.25	60		
			20	0.04	1.92	1500	0.39	14	30	0.12	31		

PWM frequency is 25 kHz. Models without ratings for 0% PWM duty cycle have zero speed at 0%. When control terminal is open, speed is the same as at 100% duty cycle.

Note 1: Sensor and control options are available for selection. Refer to the table on p. 650.
Note 2: The » mark indicates Short LeadTime Service applicable models. See p. 664 for details.

Airflow - Static Pressure Characteristics / PWM Duty - Speed Characteristics Example

9W2TM24P4G001 With pulse sensor with PWM control

PWM duty cycle

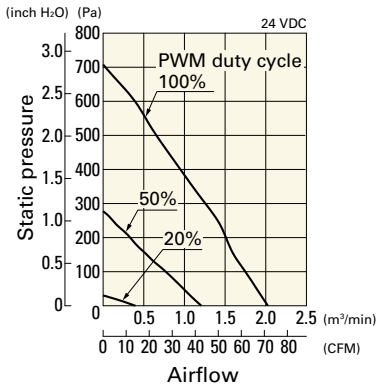

Operating voltage range

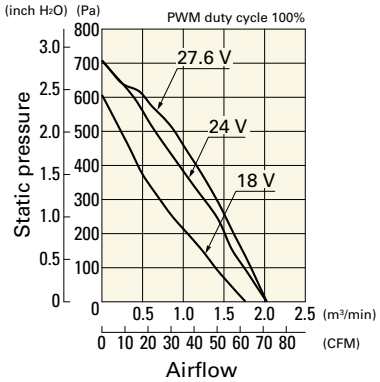

PWM duty - Speed characteristics example

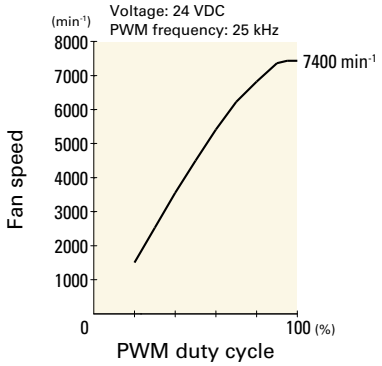

Airflow - Static Pressure Characteristics / PWM Duty - Speed Characteristics Example

9W2TM24P4H001 With pulse sensor with PWM control

PWM duty cycle

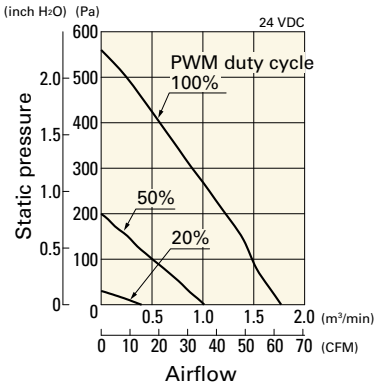

Operating voltage range

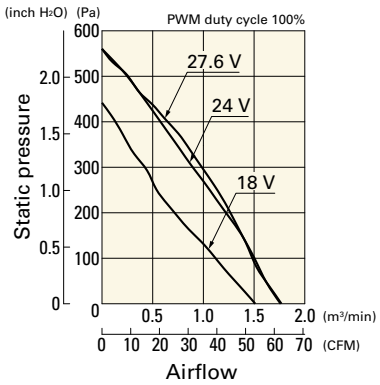

PWM duty - Speed characteristics example

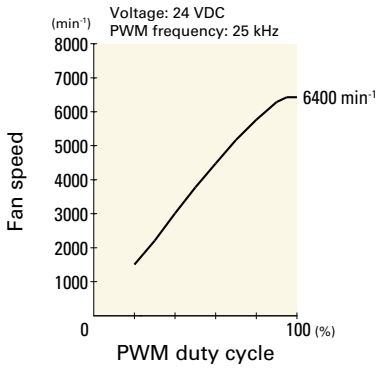

9W2TM48P4G001 With pulse sensor with PWM control

PWM duty cycle

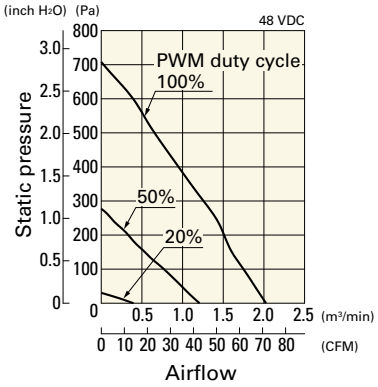

Operating voltage range

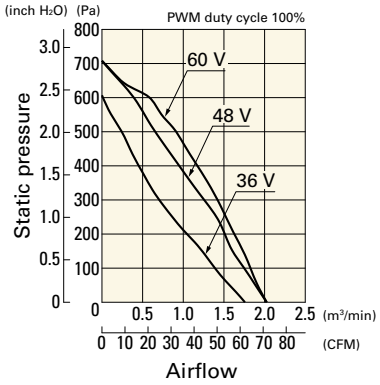

PWM duty - Speed characteristics example

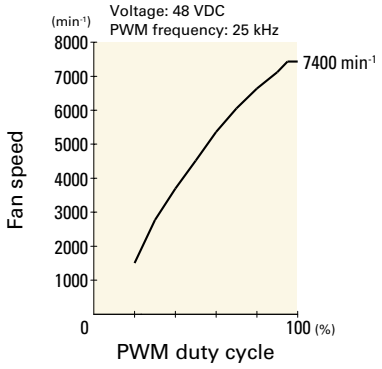

9W2TM48P4H001 With pulse sensor with PWM control

PWM duty cycle

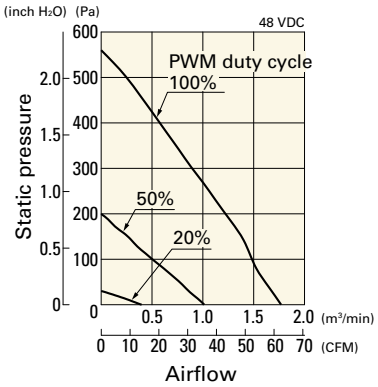

Operating voltage range

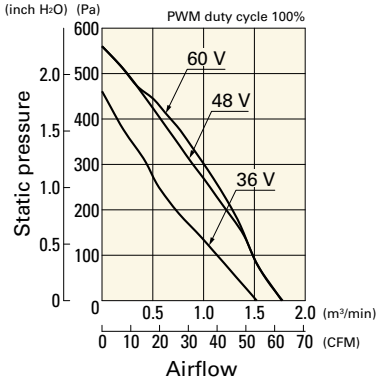

PWM duty - Speed characteristics example

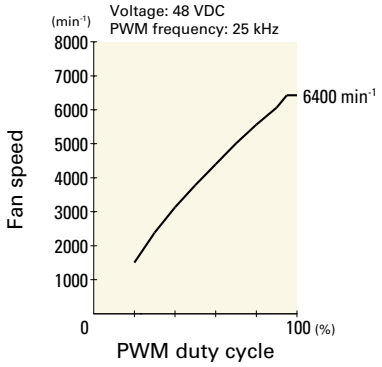

Dimensions (unit: mm)

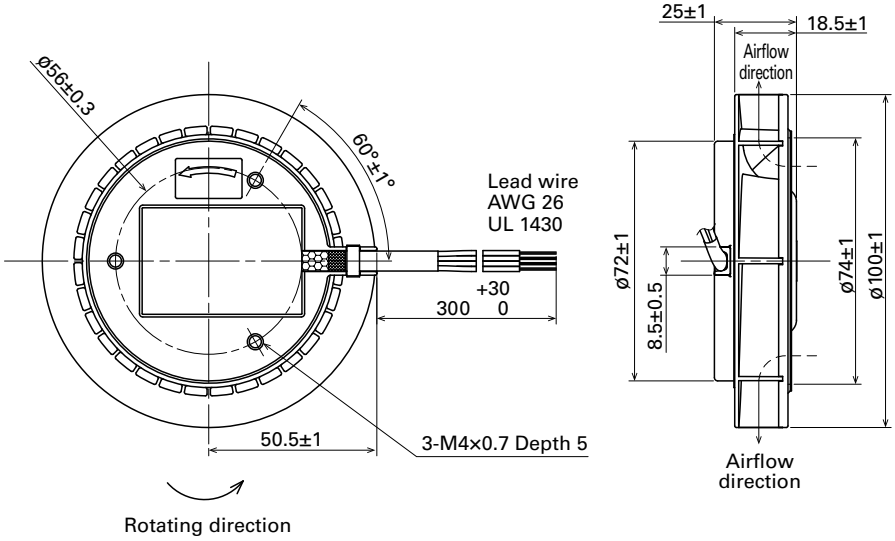

Reference Dimensions of Mounting Holes and Vent Opening (unit: mm)

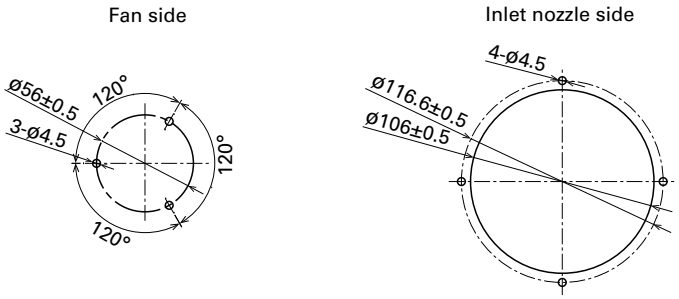

Reference Diagram for Mounting (unit: mm)

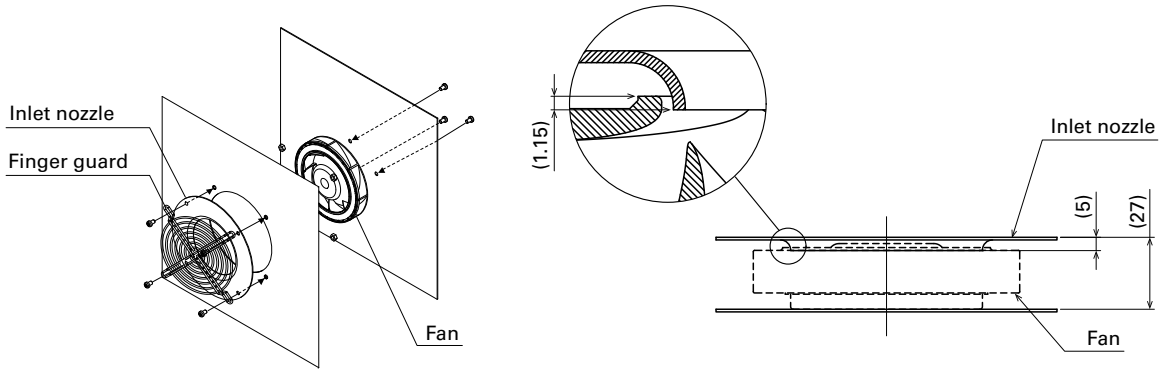

Options

Finger guards	page: p. 591
Model no.: 109-099E, 109-099H	

Inlet nozzle	page: p. 595
Model no.: 109-1080, 109-1080H	

Errata sheet

Splash Proof Centrifugal Fan

ø133×91 mm

IP68

San Ace 133W 9W2TJ type

General Specifications

- Material ..... Motor case: Aluminum (Black coating), Impeller: Plastic (Flammability: UL 94V-0)
- Expected life ..... See the table below. (L10 life: 90% survival rate for continuous operation in indoor free air at 60°C, rated voltage) Expected life at 40°C is for reference only.
- Motor protection function ..... Locked rotor burnout protection, Reverse polarity protection For details, please refer to p. 608.
- Dielectric strength ..... 50/60 Hz, 500 VAC, for 1 minute (between lead wire conductors and motor case)
- Insulation resistance ..... 10 MΩ min. at 500 VDC (between lead wire conductors and motor case)
- Sound pressure level (SPL) ..... A-weighted sound pressure level (SPL) at 1 m away from the air inlet.
- Storage temperature ..... -30 to +70°C (Non-condensing)
- Lead wire ..... ⊕Red ⊖Black Sensor Yellow Control Brown
- Mass ..... 800 g
- Ingress protection ..... IP68 For more information on IP rating, refer to p. 617.

Specifications

When the optional inlet nozzle (109-1069H) is mounted.

The models listed below **have ribs and a pulse sensor with PWM control.**

Model no.	Rated voltage [V]	Operating voltage range [V]	PWM duty cycle* [%]	Rated current [A]	Rated input [W]	Rated speed [min⁻¹]	Max. airflow [m³/min]	Max. airflow [CFM]	Max. static pressure [Pa]	Max. static pressure [inchH₂O]	SPL [dB (A)]	Operating temperature [°C]	Expected life [h]
9W2TJ24P0H001	24	20.4 to 27.6	100	1.2	28.8	4150	6.39	225	395	1.59	61	-20 to +70	40000/60°C (70000/40°C)
			20	0.09	2.16	1150	1.7	60	32	0.13	35		
9W2TJ48P0H001	48	36 to 60	100	0.55	26.4	4150	6.39	225	395	1.59	61		
			20	0.08	3.84	1150	1.7	60	32	0.13	35		

PWM frequency is 25 kHz. Models without ratings for 0% PWM duty cycle have zero speed at 0%. When control terminal is open, speed is the same as at 100% duty cycle.

Note 1: Max input is 45 W at rated voltage.
Note 2: The » mark indicates Short Lead Time Service applicable models. See p. 664 for details.

Airflow - Static Pressure Characteristics / PWM Duty - Speed Characteristics Example

9W2TJ24P0H001 With pulse sensor with PWM control

PWM duty cycle

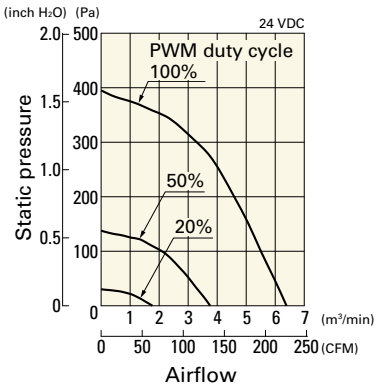

Operating voltage range

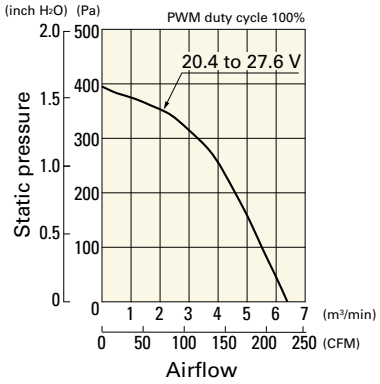

PWM duty - Speed characteristics example

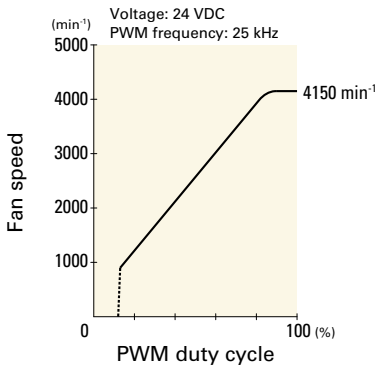

Airflow - Static Pressure Characteristics / PWM Duty - Speed Characteristics Example

9W2TJ48P0H001 With pulse sensor with PWM control

PWM duty cycle

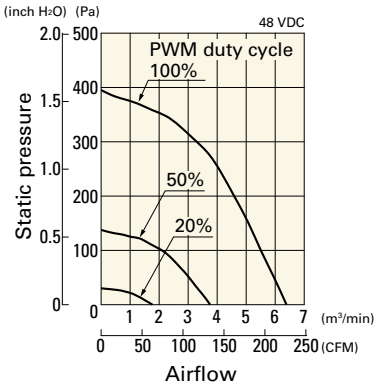

Operating voltage range

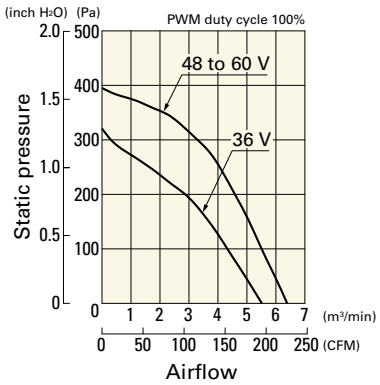

PWM duty - Speed characteristics example

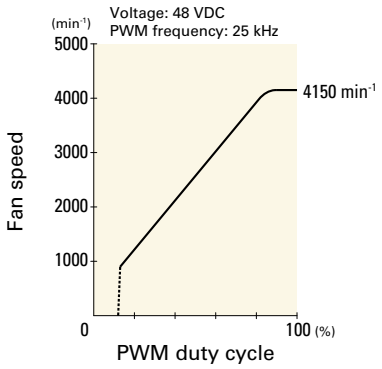

Dimensions (unit: mm)

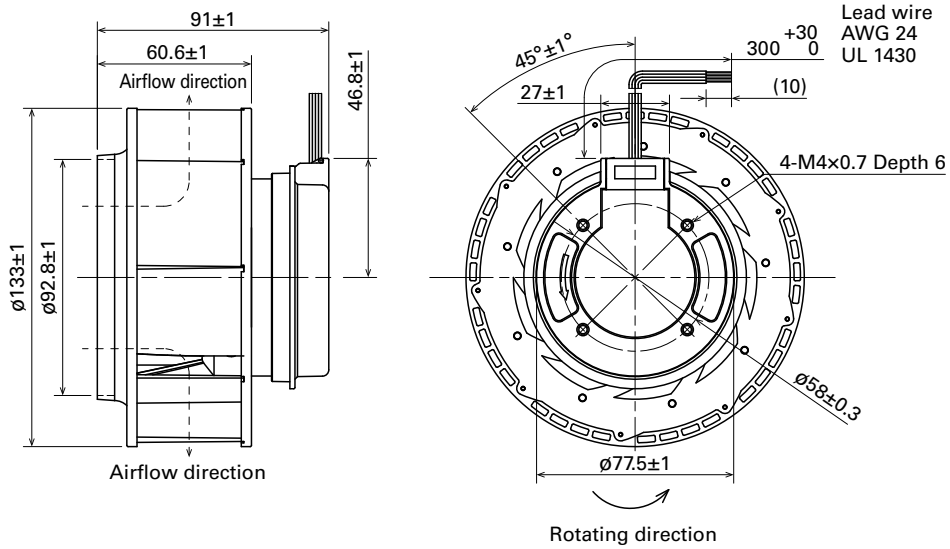

Reference Dimensions of Mounting Holes and Vent Opening (unit: mm)

Fan side

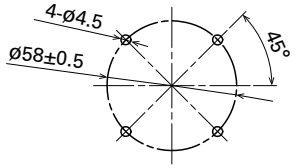

Inlet nozzle side

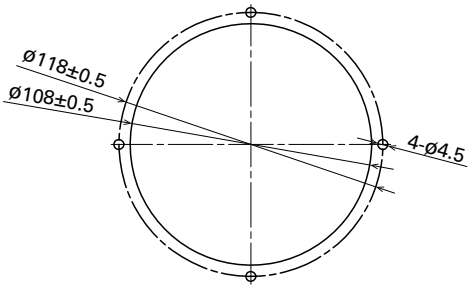

Reference Diagram for Mounting (unit: mm)

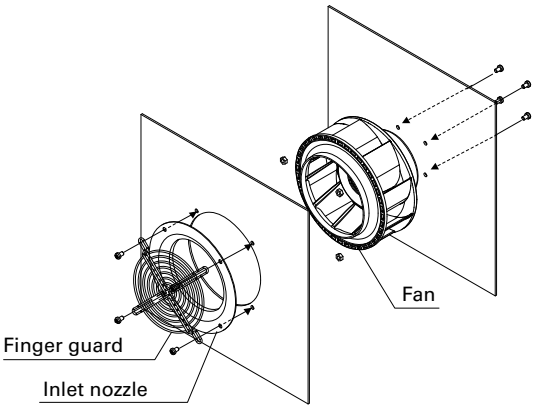

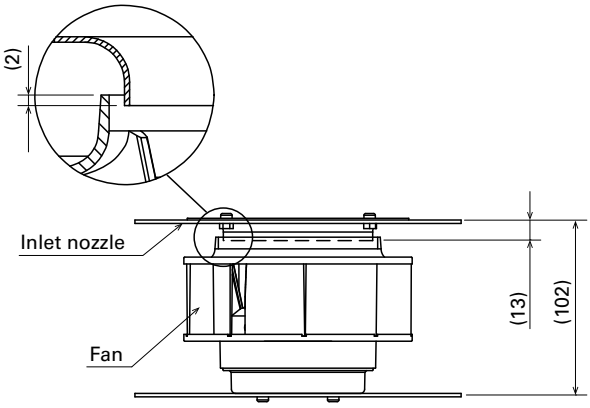

Options

Finger guards	page: p. 591

Model no.: 109-1112, 109-1112H

Inlet nozzle	page: p. 595

Model no.: 109-1069, 109-1069H

Errata sheet

ø150×35 mm

IP68

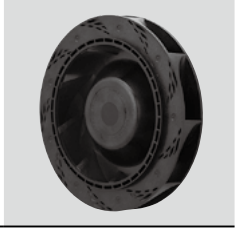

San Ace 150W 9W2TN type

General Specifications

- Material ..... Motor case: Aluminum (Black coating), Impeller: Plastic (Flammability: UL 94V-0)
- Expected life ..... See the table below. (L10 life: 90% survival rate for continuous operation in indoor free air at 60°C, rated voltage) Expected life at 40°C is for reference only.
- Motor protection function ..... Locked rotor burnout protection, Reverse polarity protection For details, please refer to p. 608.
- Dielectric strength ..... 50/60 Hz, 500 VAC, for 1 minute (between lead wire conductors and motor case)
- Insulation resistance ..... 10 MΩ min. at 500 VDC (between lead wire conductors and motor case)
- Sound pressure level (SPL) ..... A-weighted sound pressure level (SPL) at 1 m away from the air inlet.
- Storage temperature ..... -30 to +70°C (Non-condensing)
- Lead wire ..... ⊕Red ⊖Black Sensor Yellow Control Brown
- Mass ..... 360 g
- Ingress protection ..... IP68 For more information on IP rating, refer to p. 617.

Specifications

When the optional inlet nozzle (109-1081H) is mounted.

The models listed below **have ribs and a pulse sensor with PWM control.**

Model no.	Rated voltage [V]	Operating voltage range [V]	PWM duty cycle* [%]	Rated current [A]	Rated input [W]	Rated speed [min⁻¹]	Max. airflow [m³/min]	Max. airflow [CFM]	Max. static pressure [Pa]	Max. static pressure [inchH₂O]	SPL [dB (A)]	Operating temperature [°C]	Expected life [h]
9W2TN24P1H001	24	20.4 to 27.6	100	0.64	15.4	3800	3.83	135	390	1.57	59	-20 to +70	40000/60°C (70000/40°C)
			20	0.16	3.84	1500	1.51	53	60.7	0.24	38		
9W2TN48P1H001	48	36 to 55.2	100	0.32	15.4	3800	3.83	135	390	1.57	59		
			20	0.08	3.84	1500	1.51	53	60.7	0.24	38		

PWM frequency is 25 kHz. Models without ratings for 0% PWM duty cycle have zero speed at 0%. When control terminal is open, speed is the same as at 100% duty cycle.

Note 1: Max input is 22 W at rated voltage.
Note 2: The » mark indicates Short Lead Time Service applicable models. See p. 664 for details.

Airflow - Static Pressure Characteristics / PWM Duty - Speed Characteristics Example

9W2TN24P1H001 With pulse sensor with PWM control

PWM duty cycle

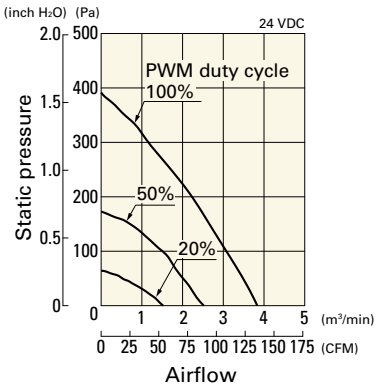

Operating voltage range

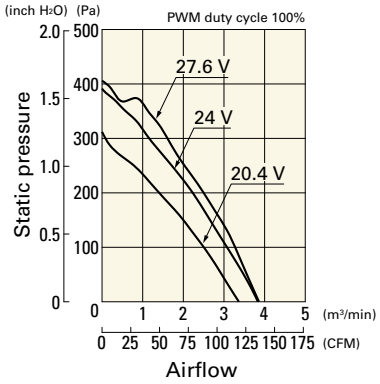

PWM duty - Speed characteristics example

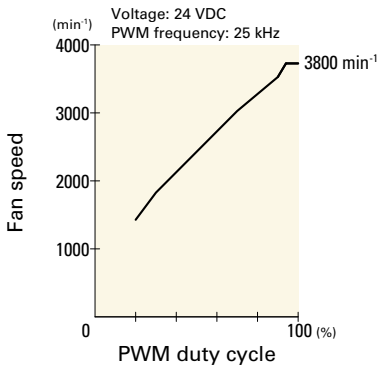

Airflow - Static Pressure Characteristics / PWM Duty - Speed Characteristics Example

9W2TN48P1H001 With pulse sensor with PWM control

PWM duty cycle

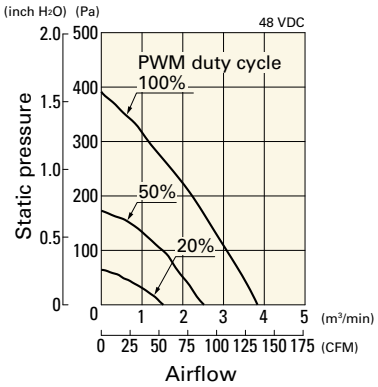

Operating voltage range

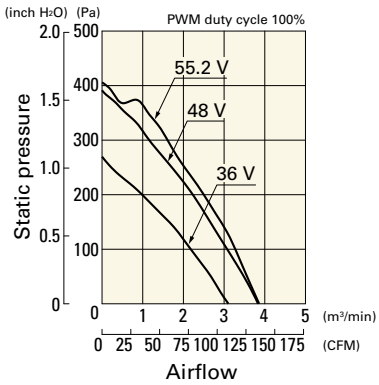

PWM duty - Speed characteristics example

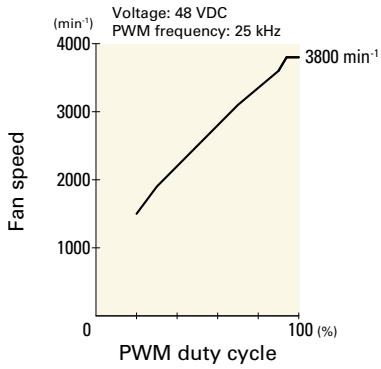

Dimensions (unit: mm)

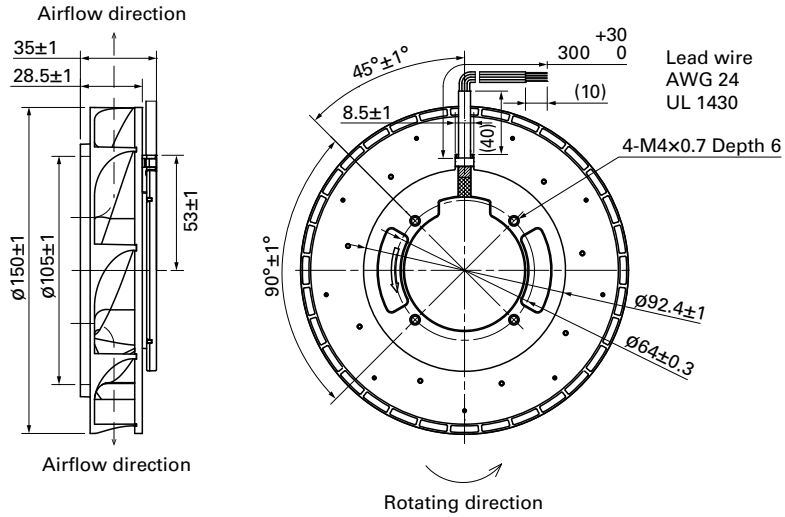

Reference Dimensions of Mounting Holes and Vent Opening (unit: mm)

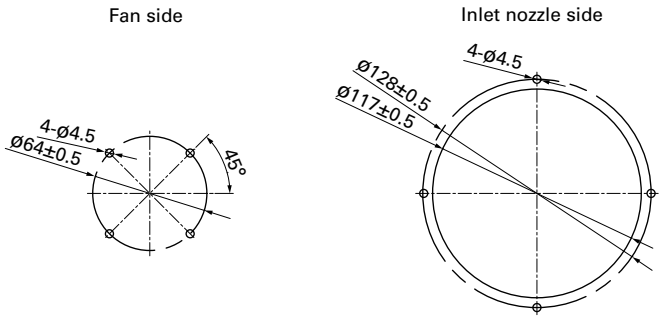

Reference Diagram for Mounting (unit: mm)

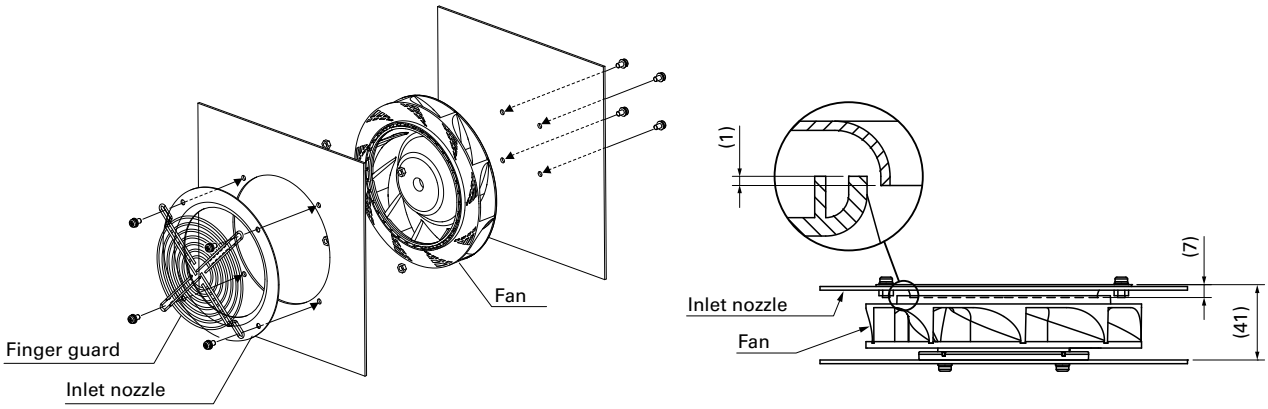

Options

Finger guards
page: p. 591

Model no.: 109-1104, 109-1104H

Inlet nozzle
page: p. 595

Model no.: 109-1081, 109-1081H

Splash Proof Centrifugal Fan

ø175×69 mm

IP56

San Ace 175W 9W2TGA type

General Specifications

- Material ..... Motor case: Aluminum (Black coating), Impeller: Plastic (Flammability: UL 94V-0)
- Expected life ..... See the table below. (L10 life: 90% survival rate for continuous operation in indoor free air at 60°C, rated voltage) Expected life at 40°C is for reference only.
- Motor protection function ..... Locked rotor burnout protection, Reverse polarity protection For details, please refer to p. 608.
- Dielectric strength ..... 50/60 Hz, 500 VAC, for 1 minute (between lead wire conductors and motor case)
- Insulation resistance ..... 10 MΩ min. at 500 VDC (between lead wire conductors and motor case)
- Sound pressure level (SPL) ..... A-weighted sound pressure level (SPL) at 1 m away from the air inlet.
- Storage temperature ..... -30 to +70°C (Non-condensing)
- Lead wire ..... ⊕Red ⊖Black Sensor Yellow Control Brown
- Mass ..... 980 g
- Ingress protection ..... IP56 For more information on IP rating, refer to p. 617.

Specifications

When the optional inlet nozzle (109-1073H) is mounted.

The models listed below **have ribs and a pulse sensor with PWM control.**

Model no.	Rated voltage [V]	Operating voltage range [V]	PWM duty cycle* [%]	Rated current [A]	Rated input [W]	Rated speed [min⁻¹]	Max. airflow [m³/min]	Max. airflow [CFM]	Max. static pressure [Pa]	Max. static pressure [inchH₂O]	SPL [dB (A)]	Operating temperature [°C]	Expected life [h]
9W2TGA48P0G001	48	36 to 72	100	3.85	184.8	5700	17.3	611	1100	4.42	80	-30 to +60	40000/60°C (70000/40°C)
			15	0.08	3.84	800	2.4	84.7	21.7	0.087	38		

PWM frequency is 25 kHz. Models without ratings for 0% PWM duty cycle have zero speed at 0%. When control terminal is open, speed is the same as at 100% duty cycle.

Note 1: Max input is 330 W at rated voltage.
Note 2: The » mark indicates Short Lead Time Service applicable models. See p. 664 for details.

Airflow - Static Pressure Characteristics / PWM Duty - Speed Characteristics Example

9W2TGA48P0G001 With pulse sensor with PWM control

PWM duty cycle

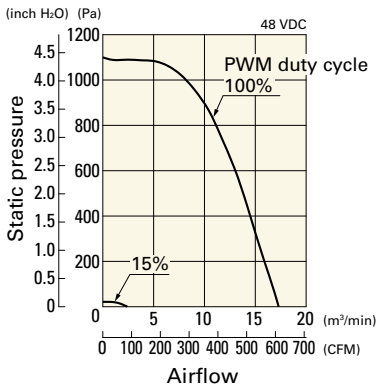

Operating voltage range

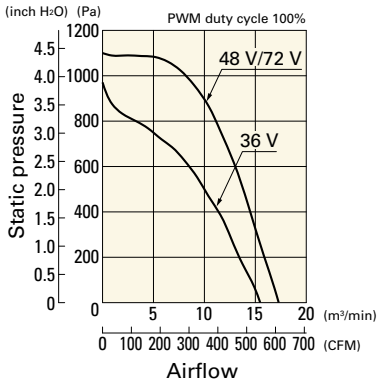

PWM duty - Speed characteristics example

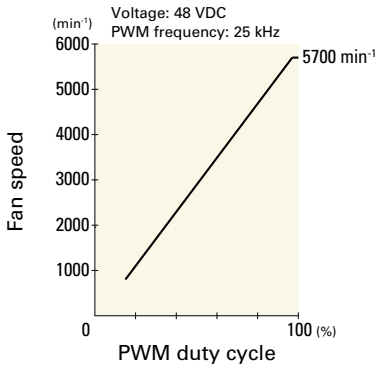

Dimensions (unit: mm)

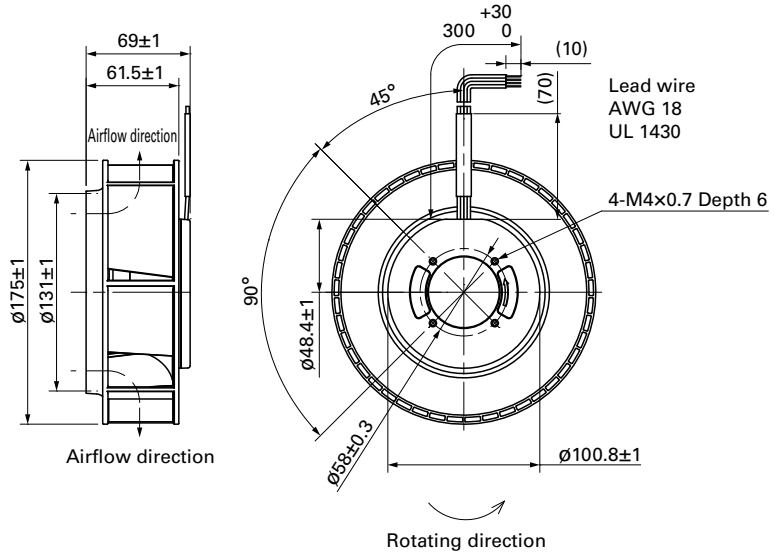

Reference Dimensions of Mounting Holes and Vent Opening (unit: mm)

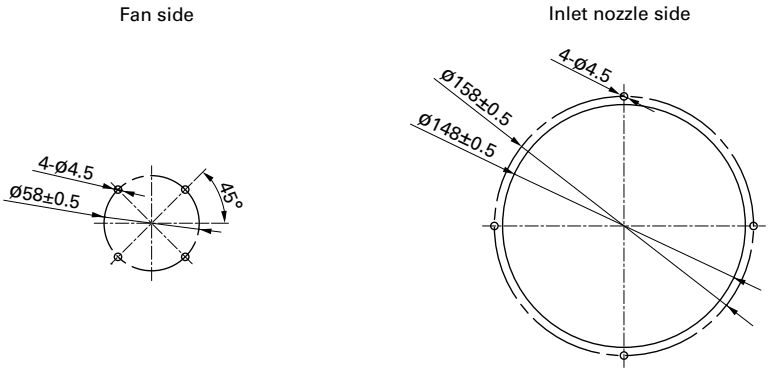

Reference Diagram for Mounting (unit: mm)

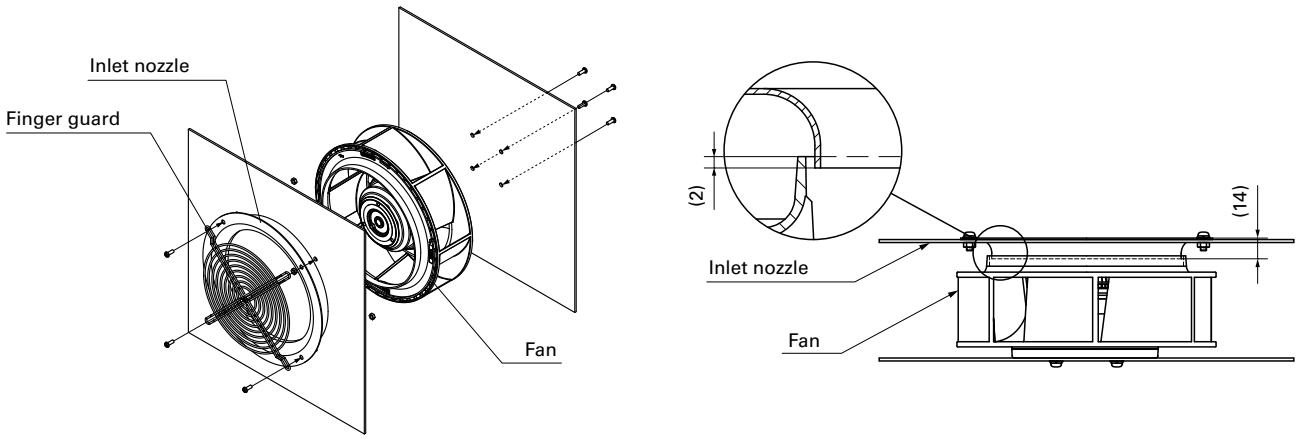

Options

Finger guards	page: p. 591
Model no.: 109-722, 109-722H	

Inlet nozzle	page: p. 595
Model no.: 109-1073, 109-1073H	

ø175×69 mm

IP54

San Ace 175W 9W1TG type

General Specifications

- Material ..... Motor case: Aluminum (Black coating), Impeller: Plastic (Flammability: UL 94V-0)
- Expected life ..... See the table below. (L10 life: 90% survival rate for continuous operation in indoor free air at 60°C, rated voltage) Expected life at 40°C is for reference only.
- Motor protection function ..... Locked rotor burnout protection, Reverse polarity protection For details, please refer to p. 608.
- Dielectric strength ..... 50/60 Hz, 500 VAC, for 1 minute (between lead wire conductors and motor case)
- Insulation resistance ..... 10 MΩ min. at 500 VDC (between lead wire conductors and motor case)
- Sound pressure level (SPL) ..... A-weighted sound pressure level (SPL) at 1 m away from the air inlet.
- Storage temperature ..... -30 to +70°C (Non-condensing)
- Lead wire ..... ⊕Red ⊖Black Sensor Yellow Control Brown
- Mass ..... 760 g
- Ingress protection ..... IP54 For more information on IP rating, refer to p. 617.

Specifications

When the optional inlet nozzle (109-1073) is mounted.

The models listed below **have a pulse sensor with PWM control.**

Model no.	Rated voltage [V]	Operating voltage range [V]	PWM duty cycle* [%]	Rated current [A]	Rated input [W]	Rated speed [min⁻¹]	Max. airflow [m³/min]	Max. airflow [CFM]	Max. static pressure [Pa]	Max. static pressure [inchH₂O]	SPL [dB (A)]	Operating temperature [°C]	Expected life [h]
9W1TG48P0S61	48	36 to 60	100	1.3	62.4	3900	11.3	399	587	2.3	69	-20 to +70	40000/60°C (70000/40°C)
			20	0.09	4.32	800	2.3	81	24	0.096	35		
9W1TG48P0H61			100	0.65	31.2	3100	9.0	318	360	1.44	64		

PWM frequency is 25 kHz. Models without ratings for 0% PWM duty cycle have zero speed at 0%. When control terminal is open, speed is the same as at 100% duty cycle.

Note 1: Max input of 9W1TG48P0S61: 94 W, 9W1TG48P0H61: 60 W at rated voltage.
Note 2: The » mark indicates Short Lead Time Service applicable models. See p. 664 for details.

Airflow - Static Pressure Characteristics / PWM Duty - Speed Characteristics Example

9W1TG48P0S61 With pulse sensor with PWM control

PWM duty cycle

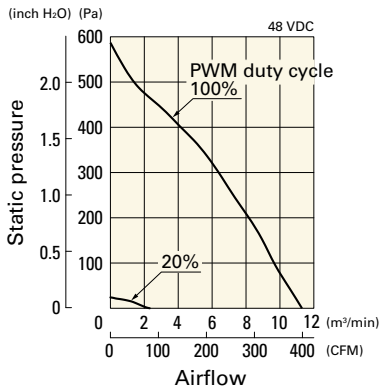

Operating voltage range

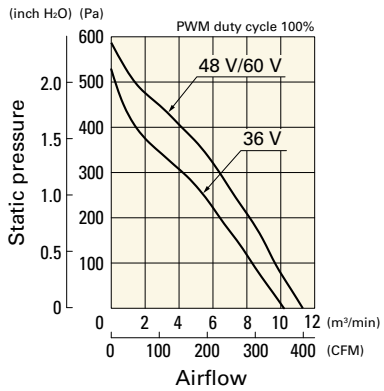

PWM duty - Speed characteristics example

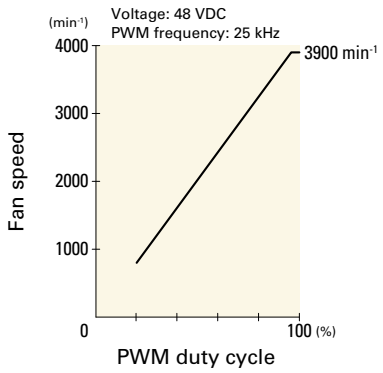

Airflow - Static Pressure Characteristics / PWM Duty - Speed Characteristics Example

9W1TG48P0H61 With pulse sensor with PWM control

PWM duty cycle

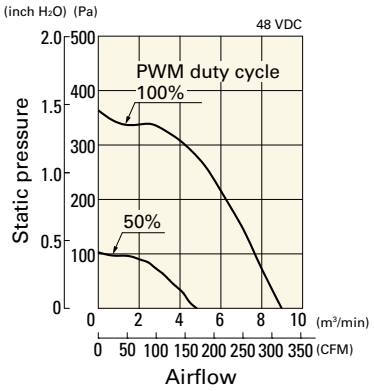

Operating voltage range

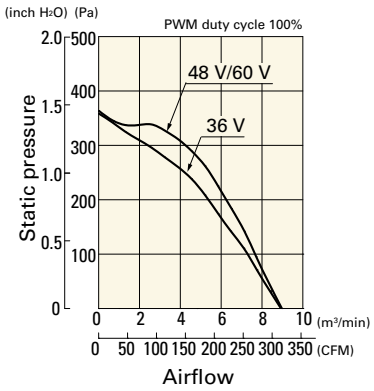

PWM duty - Speed characteristics example

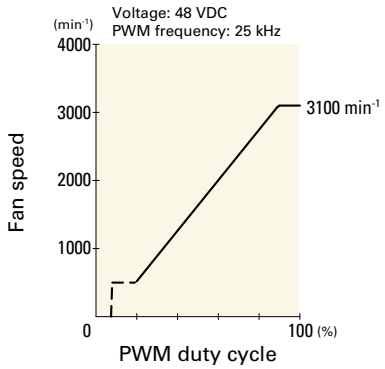

Dimensions (unit: mm)

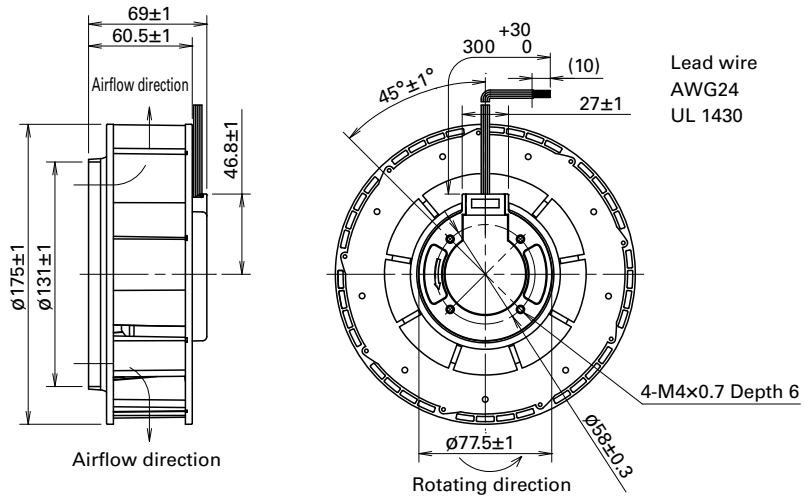

Reference Dimensions of Mounting Holes and Vent Opening (unit: mm)

Fan side

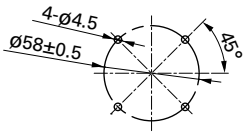

Inlet nozzle side

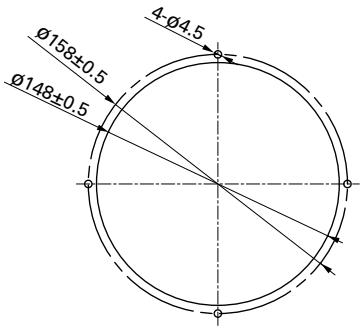

Reference Diagram for Mounting (unit: mm)

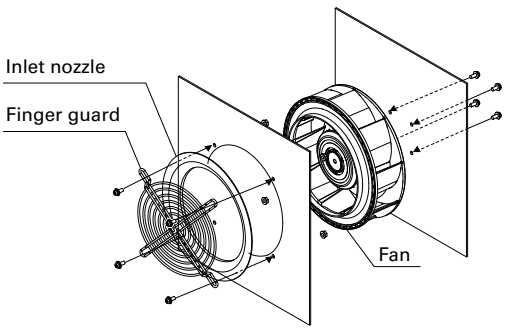

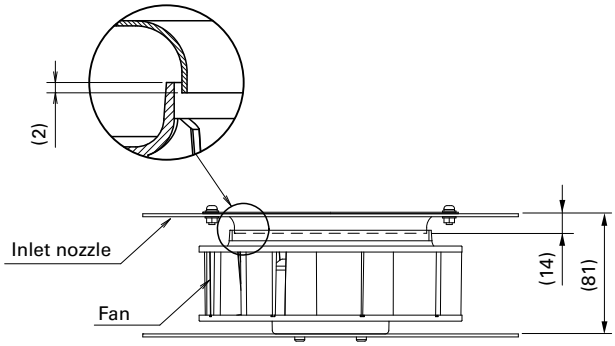

Options

Finger guards

page: p. 591

Model no.: 109-722, 109-722H

Inlet nozzle

page: p. 595

Model no.: 109-1073, 109-1073H

Errata sheet

ø221×71 mm

IP56

San Ace 221W 9W2TP type

General Specifications

- Material ..... Motor case: Aluminum (Black coating), Impeller: Plastic (Flammability: UL 94V-0)
- Expected life ..... See the table below. (L10 life: 90% survival rate for continuous operation in indoor free air at 60°C, rated voltage) Expected life at 40°C is for reference only.
- Motor protection function ..... Locked rotor burnout protection, Reverse polarity protection For details, please refer to p. 608.
- Dielectric strength ..... 50/60 Hz, 500 VAC, for 1 minute (between lead wire conductors and motor case)
- Insulation resistance ..... 10 MΩ min. at 500 VDC (between lead wire conductors and motor case)
- Sound pressure level (SPL) ..... A-weighted sound pressure level (SPL) at 1 m away from the air inlet.
- Storage temperature ..... -30 to +70°C (Non-condensing)
- Lead wire ..... ⊕Red ⊖Black Sensor Yellow Control Brown
- Mass ..... 1250 g
- Ingress protection ..... IP56 For more information on IP rating, refer to p. 617.

Specifications

When the optional inlet nozzle (109-1135H) is mounted.

The models listed below **have ribs and a pulse sensor with PWM control.**

Model no.	Rated voltage [V]	Operating voltage range [V]	PWM duty cycle* [%]	Rated current [A]	Rated input [W]	Rated speed [min⁻¹]	Max. airflow [m³/min]	Max. airflow [CFM]	Max. static pressure [Pa]	Max. static pressure [inchH₂O]	SPL [dB (A)]	Operating temperature [°C]	Expected life [h]
9W2TP24P0H001	24	16 to 36	100	3.35	80.4	3050	17.6	621	530	2.13	71.5	-25 to +70	40000/60°C (70000/40°C)
			15	0.4	9.6	1000	5.75	203	57.0	0.23	53.5		
9W2TP48P0S001	48	36 to 72	100	2.3	110.4	3400	19.6	692	659	2.65	73.5		
			15	0.2	9.6	1000	5.75	203	57.0	0.23	53.5		

PWM frequency is 25 kHz. Models without ratings for 0% PWM duty cycle have zero speed at 0%. When control terminal is open, speed is the same as at 100% duty cycle.

Note 1: Max input of 9W2TP24P0H001: 150 W, 9W2TP48P0S001: 210 W at rated voltage.
Note 2: The » mark indicates Short Lead Time Service applicable models. See p. 664 for details.

Airflow - Static Pressure Characteristics / PWM Duty - Speed Characteristics Example

9W2TP24P0H001 With pulse sensor with PWM control

PWM duty cycle

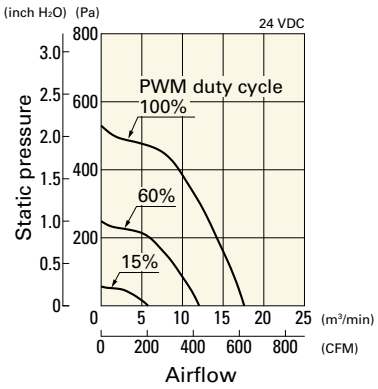

Operating voltage range

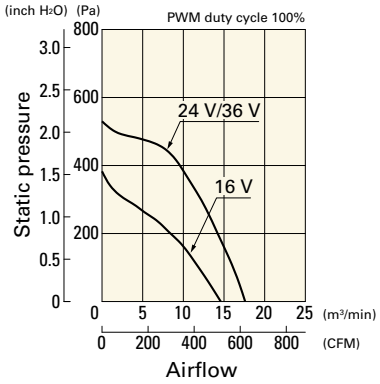

PWM duty - Speed characteristics example

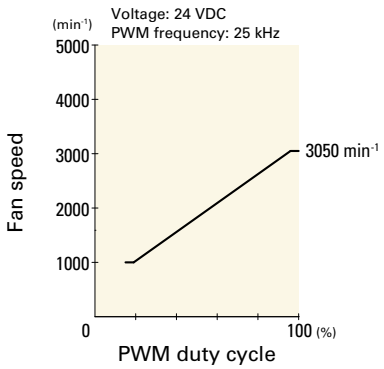

Airflow - Static Pressure Characteristics / PWM Duty - Speed Characteristics Example

9W2TP48P0S001 With pulse sensor with PWM control

PWM duty cycle

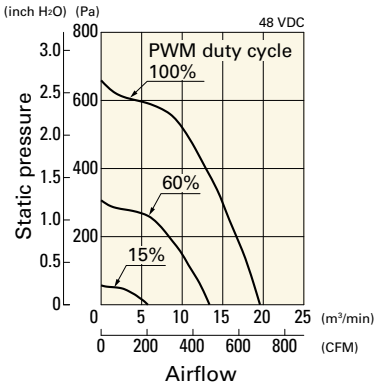

Operating voltage range

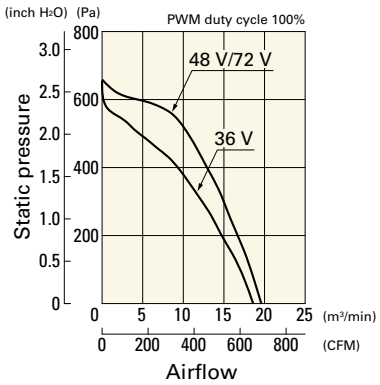

PWM duty - Speed characteristics example

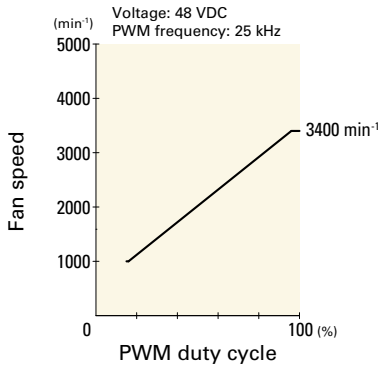

Dimensions (unit: mm)

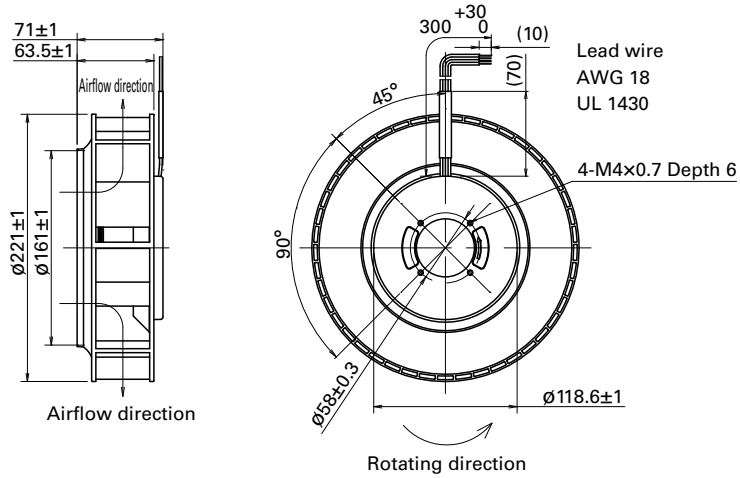

Reference Dimensions of Mounting Holes and Vent Opening (unit: mm)

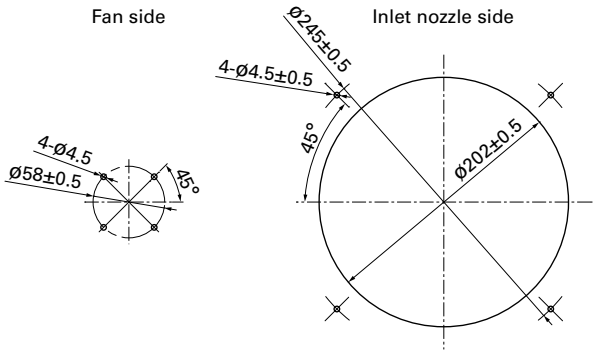

Reference Diagram for Mounting (unit: mm)

Bracket-mounted model of this fan is available. For details, refer to pp. 335 to 337.

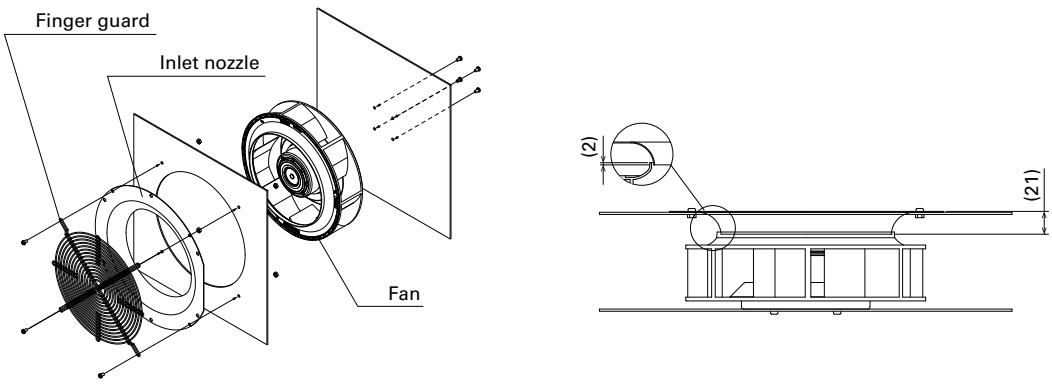

Options

Finger guards
page: p. 593

Model no.: 109-1138, 109-1138H

Inlet nozzle
page: p. 595

Model no.: 109-1135, 109-1135H

Splash Proof Centrifugal Fan

ø225×99 mm

IP56

San Ace 225W 9W2TS type

General Specifications

- Material ..... Motor case: Aluminum (Black coating), Impeller: Plastic (Flammability: UL 94V-0)
- Expected life ..... See the table below. (L10 life: 90% survival rate for continuous operation in indoor free air at 60°C, rated voltage) Expected life at 40°C is for reference only.
- Motor protection function ..... Locked rotor burnout protection, Reverse polarity protection For details, please refer to p. 608.
- Dielectric strength ..... 50/60 Hz, 500 VAC, for 1 minute (between lead wire conductors and motor case)
- Insulation resistance ..... 10 MΩ min. at 500 VDC (between lead wire conductors and motor case)
- Sound pressure level (SPL) ..... A-weighted sound pressure level (SPL) at 1 m away from the air inlet.
- Storage temperature ..... -30 to +70°C (Non-condensing)
- Lead wire ..... ⊕Red ⊖Black Sensor Yellow Control Brown
- Mass ..... 1500 g
- Ingress protection ..... IP56 For more information on IP rating, refer to p. 617.

Specifications

When the optional inlet nozzle (109-1134H) is mounted.

The models listed below **have ribs and a pulse sensor with PWM control.**

Model no.	Rated voltage [V]	Operating voltage range [V]	PWM duty cycle* [%]	Rated current [A]	Rated input [W]	Rated speed [min⁻¹]	Max. airflow [m³/min]	Max. airflow [CFM]	Max. static pressure [Pa]	Max. static pressure [inchH₂O]	SPL [dB (A)]	Operating temperature [°C]	Expected life [h]
9W2TS48P0S001	48	36 to 72	100	2.45	117.6	3000	23.5	830	635	2.55	72.0	-25 to +70	40000/60°C (70000/40°C)
			15	0.24	11.5	1000	7.83	276	70.6	0.28	52.5		

PWM frequency is 25 kHz. Models without ratings for 0% PWM duty cycle have zero speed at 0%. When control terminal is open, speed is the same as at 100% duty cycle.

Note 1: Max input is 220 W at rated voltage.
Note 2: The » mark indicates Short Lead Time Service applicable models. See p. 664 for details.

Airflow - Static Pressure Characteristics / PWM Duty - Speed Characteristics Example

9W2TS48P0S001 With pulse sensor with PWM control

PWM duty cycle

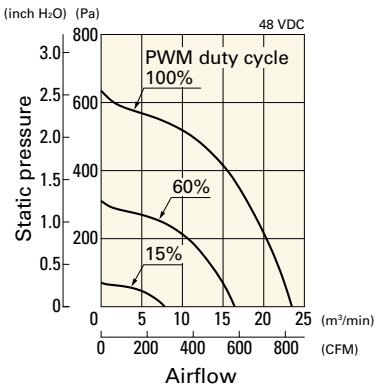

Operating voltage range

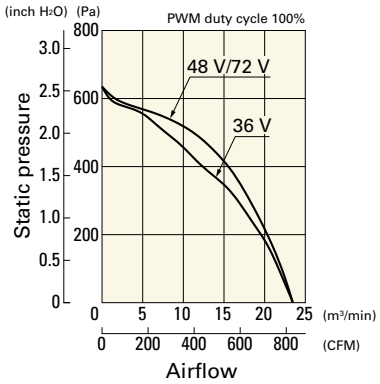

PWM duty - Speed characteristics example

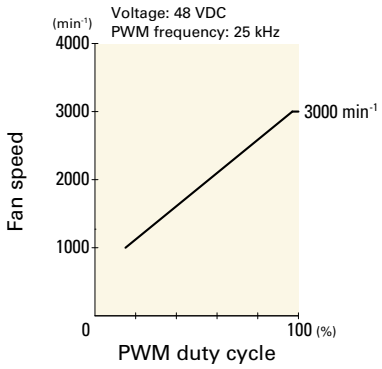

Dimensions (unit: mm)

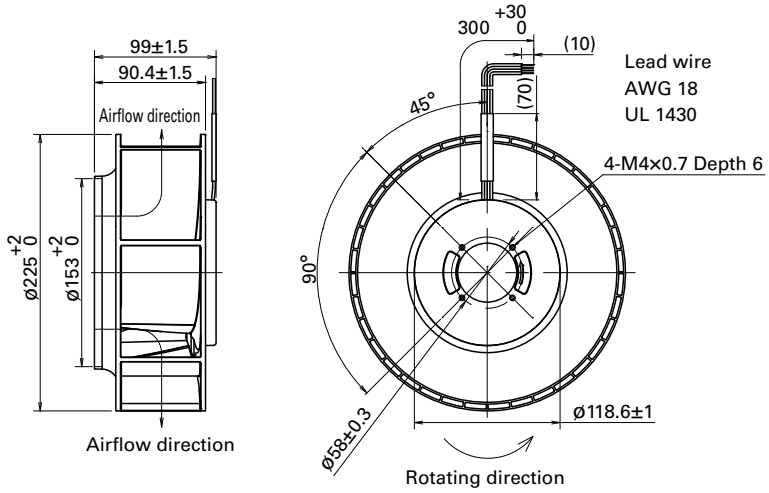

Reference Dimensions of Mounting Holes and Vent Opening (unit: mm)

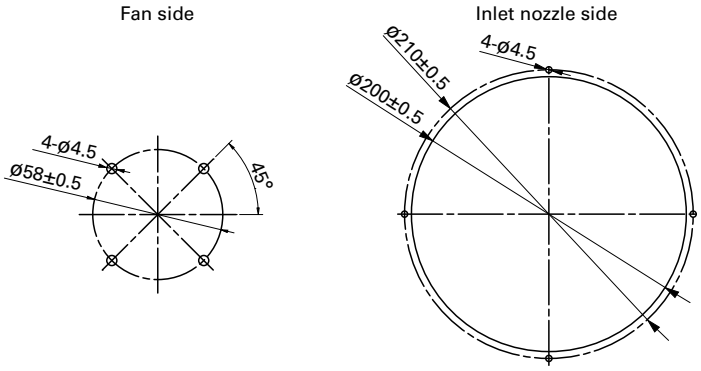

Reference Diagram for Mounting (unit: mm)

Bracket-mounted model of this fan is available. For details, refer to pp. 338 to 339.

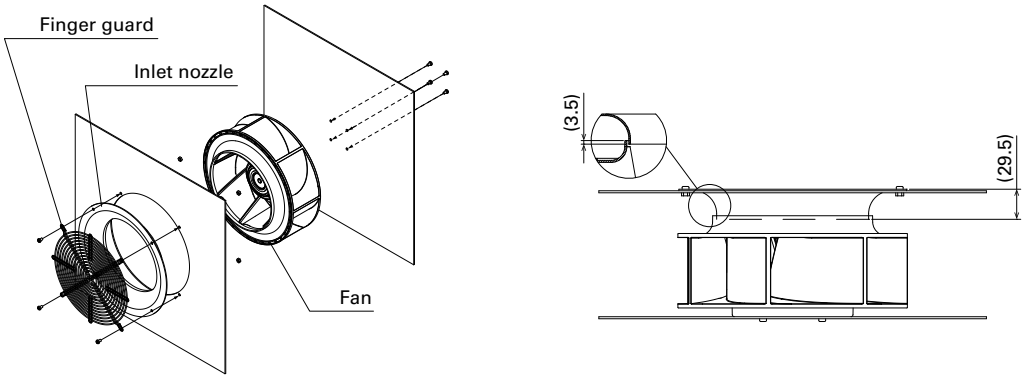

Options

Finger guards	page: p. 593
Model no.: 109-1137, 109-1137H	

Inlet nozzle	page: p. 595
Model no.: 109-1134, 109-1134H	

Bracket-mounted Splash Proof Centrifugal Fan

270×270×99 mm

IP56

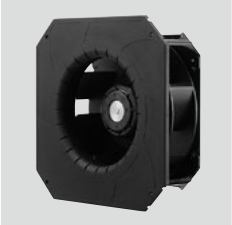

San Ace 221W 9B1W2TP type

General Specifications

- Material ..... Motor case: Aluminum (Black coating), Impeller: Plastic (Flammability: UL 94V-0)
  Bracket: Aluminum (Black coating), Plastic (Flammability: UL94V-0)
- Expected life ..... See the table below. (L10 life: 90% survival rate for continuous operation in indoor free air at 60°C, rated voltage)
  Expected life at 40°C is for reference only.
- Motor protection function ..... Locked rotor burnout protection, Reverse polarity protection
  For details, please refer to p. 608.
- Dielectric strength ..... 50/60 Hz, 500 VAC, for 1 minute (between lead wire conductors and bracket)
- Insulation resistance ..... 10 MΩ min. at 500 VDC (between lead wire conductors and bracket)
- Sound pressure level (SPL) ..... A-weighted sound pressure level (SPL) at 1 m away from the air inlet.
- Storage temperature ..... -30 to +70°C (Non-condensing)
- Lead wire ..... ⊕Red ⊖Black Sensor Yellow Control Brown
- Mass ..... 1900 g
- Ingress protection ..... IP56 For more information on IP rating, refer to p. 617.

Specifications

The models listed below **have ribs and a pulse sensor with PWM control.**

Model no.	Rated voltage [V]	Operating voltage range [V]	PWM duty cycle* [%]	Rated current [A]	Rated input [W]	Rated speed [min⁻¹]	Max. airflow [m³/min]	Max. airflow [CFM]	Max. static pressure [Pa]	Max. static pressure [inchH₂O]	SPL [dB (A)]	Operating temperature [°C]	Expected life [h]
9B1W2TP24P0H001	24	16 to 36	100	3.35	80.4	3050	17.6	621	530	2.13	71.5	-25 to +70	40000/60°C (70000/40°C)
			15	0.4	9.6	1000	5.75	203	57.0	0.23	53.5		
9B1W2TP48P0S001	48	36 to 72	100	2.3	110.4	3400	19.6	692	659	2.65	73.5		
			15	0.2	9.6	1000	5.75	203	57.0	0.23	53.5		

PWM frequency is 25 kHz. Models without ratings for 0% PWM duty cycle have zero speed at 0%. When control terminal is open, speed is the same as at 100% duty cycle.

Note: Max input of 9B1W2TP24P0H001: 150 W, 9B1W2TP48P0S001: 210 W at rated voltage.

Airflow - Static Pressure Characteristics / PWM Duty - Speed Characteristics Example

9B1W2TP24P0H001 With pulse sensor with PWM control

PWM duty cycle

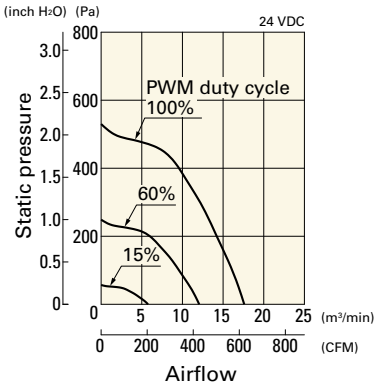

Operating voltage range

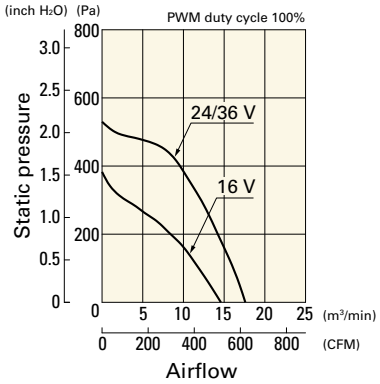

PWM duty - Speed characteristics example

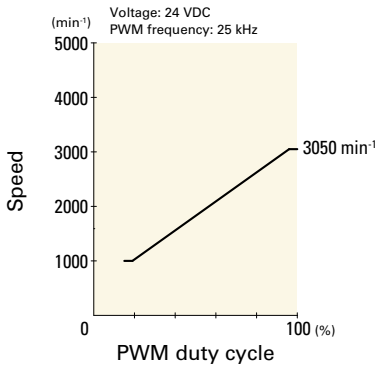

Airflow - Static Pressure Characteristics / PWM Duty - Speed Characteristics Example

9B1W2TP48P0S001 With pulse sensor with PWM control

PWM duty cycle

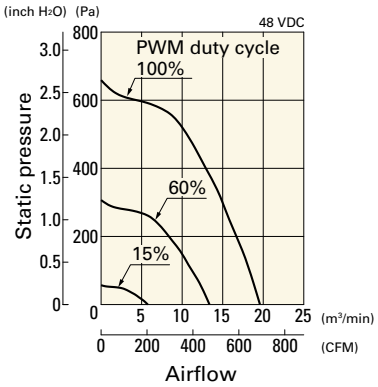

Operating voltage range

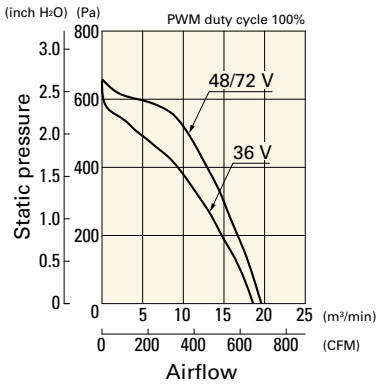

PWM duty - Speed characteristics example

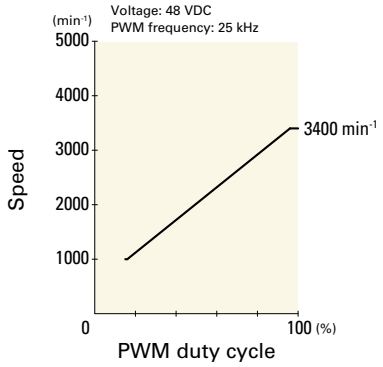

Dimensions (unit: mm)

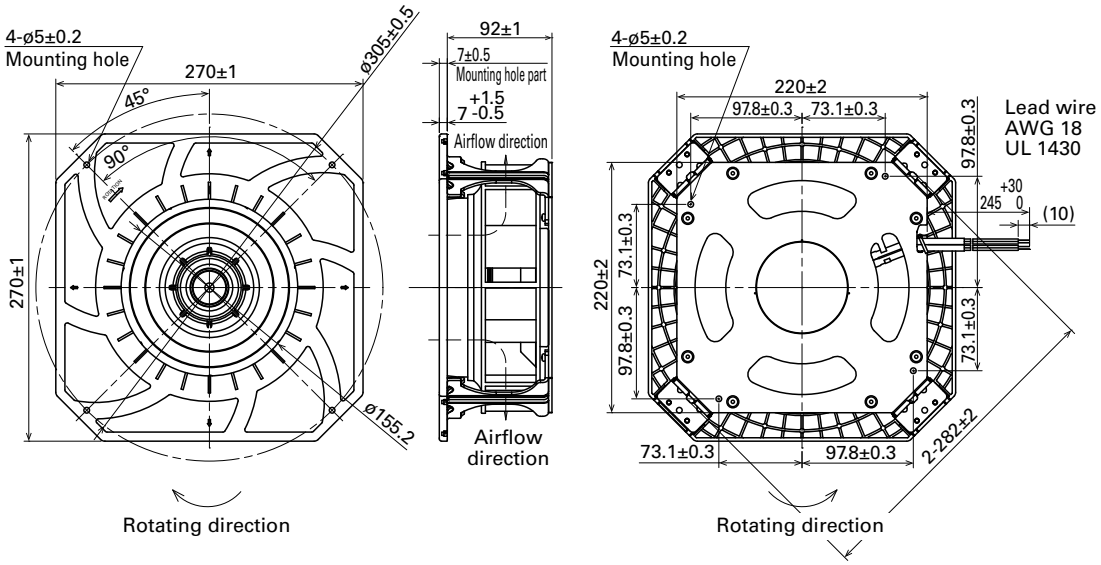

Reference Dimensions of Mounting Holes and Vent Opening (unit: mm)

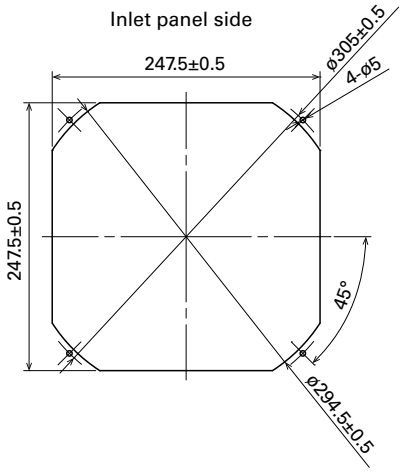

Reference Diagram for Mounting

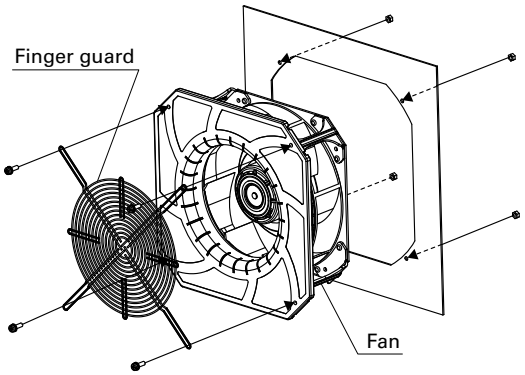

Options

Finger guards	page: p. 594

Model no.: 109-1146, 109-1146H

Errata sheet

Bracket-mounted Splash Proof Centrifugal Fan

270×270×119 mm

IP56

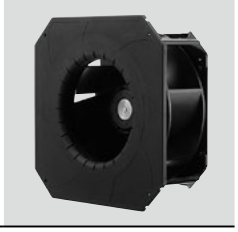

San Ace 225W 9B1W2TS type

General Specifications

- Material ..... Motor case: Aluminum (Black coating), Impeller: Plastic (Flammability: UL 94V-0)
  Bracket: Aluminum (Black coating), Plastic (Flammability: UL94V-0)
- Expected life ..... See the table below. (L10 life: 90% survival rate for continuous operation in indoor free air at 60°C, rated voltage)
  Expected life at 40°C is for reference only.
- Motor protection function ..... Locked rotor burnout protection, Reverse polarity protection
  For details, please refer to p. 608.
- Dielectric strength ..... 50/60 Hz, 500 VAC, for 1 minute (between lead wire conductors and bracket)
- Insulation resistance ..... 10 MΩ min. at 500 VDC (between lead wire conductors and bracket)
- Sound pressure level (SPL) ..... A-weighted sound pressure level (SPL) at 1 m away from the air inlet.
- Storage temperature ..... -30 to +70°C (Non-condensing)
- Lead wire ..... ⊕Red ⊖Black Sensor Yellow Control Brown
- Mass ..... 2200 g
- Ingress protection ..... IP56 For more information on IP rating, refer to p. 617.

Specifications

The models listed below **have ribs and a pulse sensor with PWM control.**

Model no.	Rated voltage [V]	Operating voltage range [V]	PWM duty cycle* [%]	Rated current [A]	Rated input [W]	Rated speed [min⁻¹]	Max. airflow [m³/min]	Max. airflow [CFM]	Max. static pressure [Pa]	Max. static pressure [inchH₂O]	SPL [dB (A)]	Operating temperature [°C]	Expected life [h]
9B1W2TS48P0S001	48	36 to 72	100	2.45	117.6	3000	23.5	830	635	2.55	72.0	-25 to +70	40000/60°C (70000/40°C)
			15	0.24	11.5	1000	7.83	276	70.6	0.28	52.5		

PWM frequency is 25 kHz. Models without ratings for 0% PWM duty cycle have zero speed at 0%. When control terminal is open, speed is the same as at 100% duty cycle.

Note: Max input is 220 W at rated voltage.

Airflow - Static Pressure Characteristics / PWM Duty - Speed Characteristics Example

9B1W2TS48P0S001 With pulse sensor with PWM control

PWM duty cycle

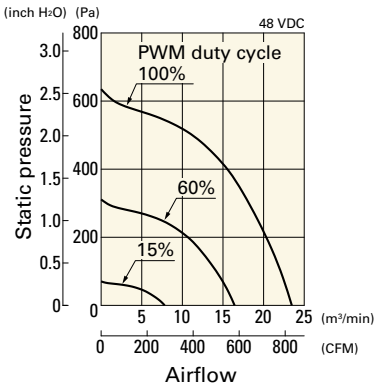

Operating voltage range

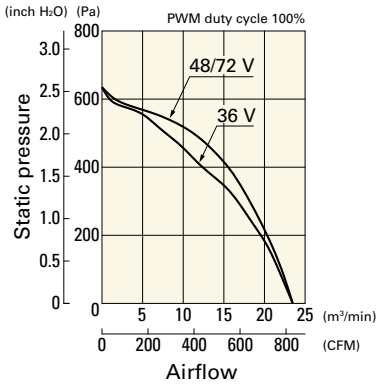

PWM duty - Speed characteristics example

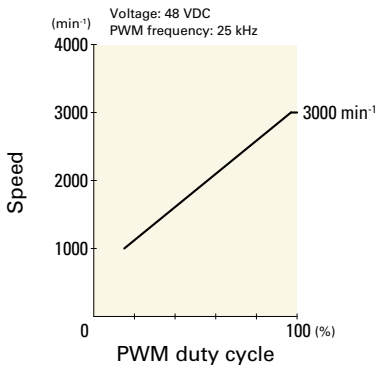

Dimensions (unit: mm)

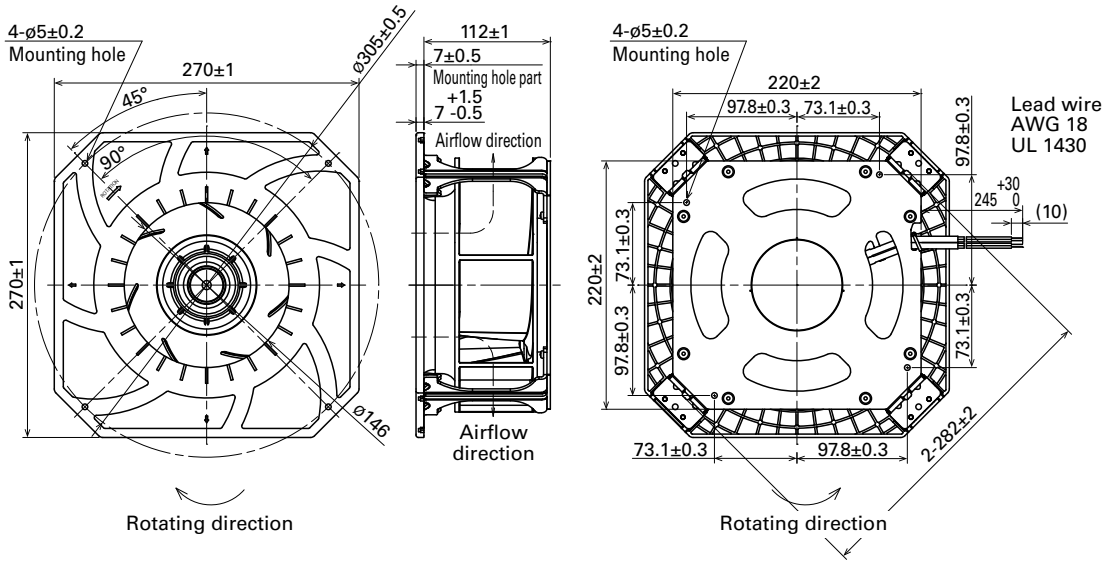

Reference Dimensions of Mounting Holes and Vent Opening (unit: mm)

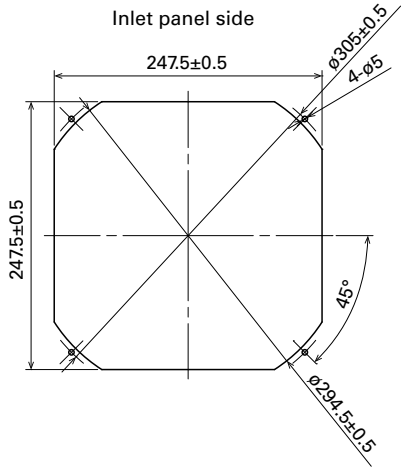

Reference Diagram for Mounting

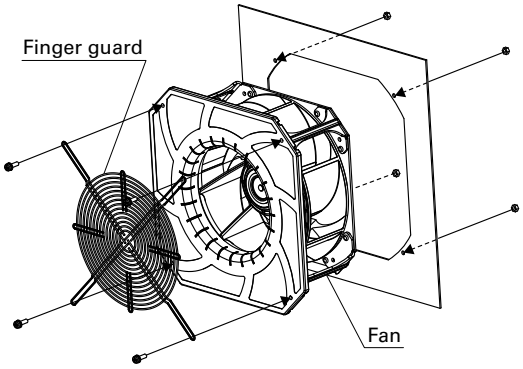

Options

Finger guards page: p. 594

Model no.: 109-1146, 109-1146H

Splash Proof Blower

This fan specializes in high static pressure and has IP68-rated water resistance. For more information on IP rating, refer to p. 617.
Related product: Splash Proof Fan p. 255, Splash Proof Centrifugal Fan p. 315, Blower p. 465

Model Numbering System

Not every combination of the following codes or characters is available. Contact us for an available combination.

9W1B	M	12	P	2	H	001
Type name	Frame size	Voltage	PWM control	Frame thickness	Speed code	Individual customer's spec (3 digits)

Type name	9W1B
Frame size (mm)	M 97
Voltage (V)	12 24 12 24
Frame thickness (mm)	2 33
Speed code	H M

How to Read Specifications (DC fan)

The following is a sample. See respective product pages for detailed information.

Model no.	Rated voltage [V]	Operating voltage range [V]	Rated current [A]	Rated input [W]	Rated speed [min⁻¹]	Max. airflow [m³/min]	Max. airflow [CFM]	Max. static pressure [Pa]	Max. static pressure [inchH₂O]	SPL [dB (A)]	Operating temperature [°C]	Expected life [h]
9GA0412G7001	12	7 to 13.8	0.17	2.04	13100	0.36	12.7	192	0.77	42	-20 to +70	40000/60°C (70000/40°C)

Rated voltage ····· This is the necessary voltage to drive the fan. E.g.) 12 VDC, 24 VDC, 48 VDC
Operating voltage range ····· The voltage range over which fan operation is guaranteed.
Rated current ····· The current when the fan is operating at rated voltage (at free air).
Rated input ····· The power value when the fan is operating at rated voltage (at free air).
Rated speed ····· The speed when the fan is operating at rated voltage (at free air).
Max. airflow ····· The airflow at 0 Pa static pressure when the fan is operating at rated voltage. (Measured using the double chamber method)
Max. static pressure ····· The static pressure at 0 m^3/min airflow when the fan is operating at rated voltage. (Measured using the double chamber method)
SPL ····· A-weighted sound pressure level (SPL) when the fan operates at the rated speed.
For the measurement method, see the Technical Materials section in the catalog.
Operating temperature ····· The temperature range over which fan operation is guaranteed (Non-condensing).
Expected life ····· Service life hours that 90% of bearings will survive without failing when continuously operated at the rated voltage and 60°C temperature. Expected life at 40°C is for reference only.
For more information, please refer to the technical material section.

Errata sheet

Splash Proof Blower

97×33 mm

San Ace 97W 9W1BM type

IP68

General Specifications

- Material ..... Frame: Aluminum (Black coating), Plastic (Flammability: UL 94V-0), Impeller: Plastic (Flammability: UL 94V-0)
- Expected life ..... See the table below. (L10 life: 90% survival rate for continuous operation in indoor free air at 60°C, rated voltage) Expected life at 40°C is for reference only.
- Motor protection function ..... Locked rotor burnout protection, Reverse polarity protection For details, please refer to p. 608.
- Dielectric strength ..... 50/60 Hz, 500 VAC, for 1 minute (between lead wire conductors and frame)
- Insulation resistance ..... 10 MΩ min. at 500 VDC (between lead wire conductors and frame)
- Sound pressure level (SPL) ..... A-weighted sound pressure level (SPL) at 1 m away from the air inlet.
- Storage temperature ..... -30 to +70°C (Non-condensing)
- Lead wire ..... ⊕Red ⊖Black Sensor Yellow Control Brown
- Mass ..... 240 g
- Ingress protection ..... IP68 For more information on IP rating, refer to p. 617.

Specifications

The models listed below **have ribs and a pulse sensor with PWM control.**

Model no.	Rated voltage [V]	Operating voltage range [V]	PWM duty cycle* [%]	Rated current [A]	Rated input [W]	Rated speed [min⁻¹]	Max. airflow [m³/min]	Max. airflow [CFM]	Max. static pressure [Pa]	Max. static pressure [inchH₂O]	SPL [dB (A)]	Operating temperature [°C]	Expected life [h]
9W1BM12P2H001	12	10.2 to 13.8	100	1.3	15.6	4800	1.09	38.5	540	2.17	58	-20 to +70	40000/60°C (70000/40°C)
			20	0.14	1.68	1500	0.32	11.3	51	0.2	30		
9W1BM12P2M001			100	0.9	10.8	4100	0.93	32.8	380	1.53	55		
			20	0.14	1.68	1500	0.32	11.3	51	0.2	30		
9W1BM24P2H001	24	20.4 to 27.6	100	0.65	15.6	4800	1.09	38.5	540	2.17	58		
			20	0.07	1.68	1500	0.32	11.3	51	0.2	30		
9W1BM24P2M001			100	0.45	10.8	4100	0.93	32.8	380	1.53	55		
			20	0.07	1.68	1500	0.32	11.3	51	0.2	30		

PWM frequency is 25 kHz. Models without ratings for 0% PWM duty cycle have zero speed at 0%. When control terminal is open, speed is the same as at 100% duty cycle.

Note 1: Sensor and control options are available for selection. Refer to the table on p. 650.
Note 2: The » mark indicates Short LeadTime Service applicable models. See p. 664 for details.

Airflow - Static Pressure Characteristics / PWM Duty - Speed Characteristics Example

9W1BM12P2H001 With pulse sensor with PWM control

PWM duty cycle

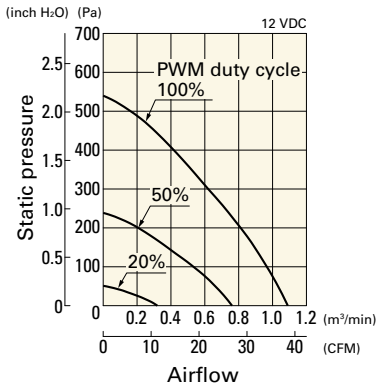

Operating voltage range

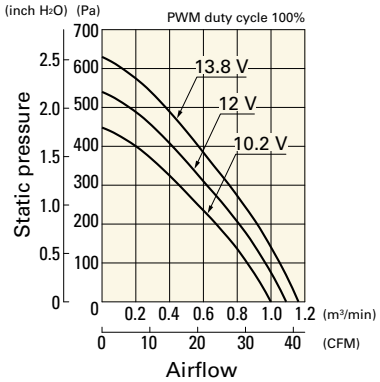

PWM duty - Speed characteristics example

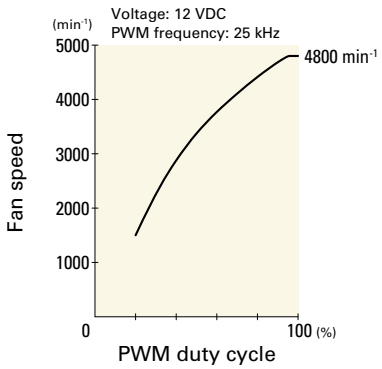

Airflow - Static Pressure Characteristics / PWM Duty - Speed Characteristics Example

9W1BM12P2M001 With pulse sensor with PWM control

PWM duty cycle

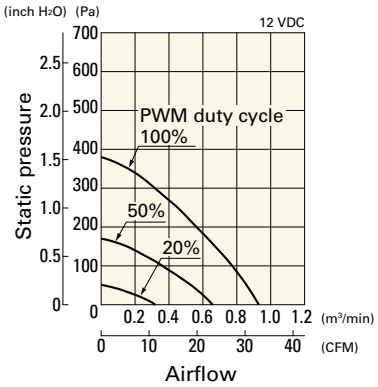

Operating voltage range

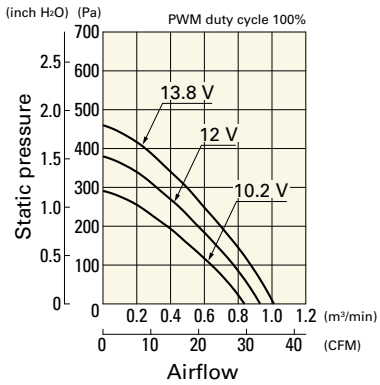

PWM duty - Speed characteristics example

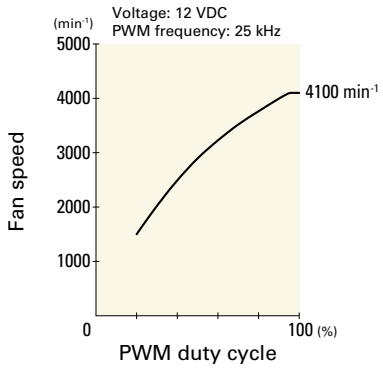

9W1BM24P2H001 With pulse sensor with PWM control

PWM duty cycle

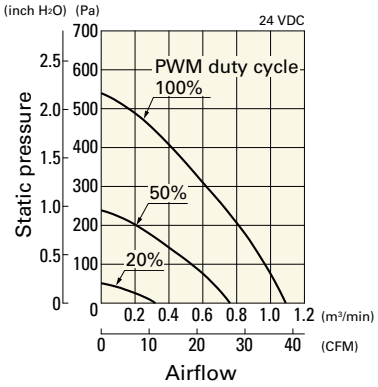

Operating voltage range

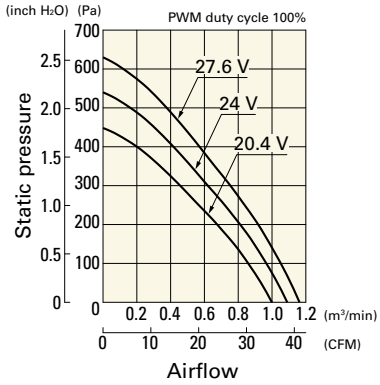

PWM duty - Speed characteristics example

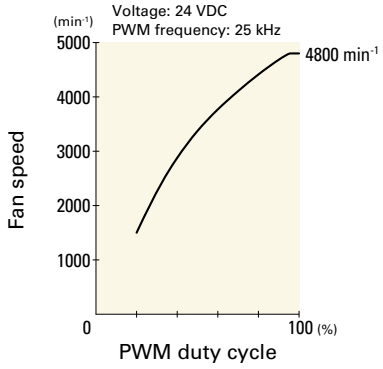

9W1BM24P2M001 With pulse sensor with PWM control

PWM duty cycle

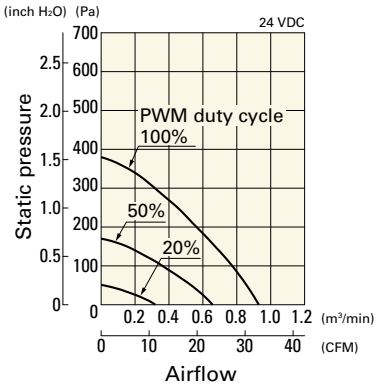

Operating voltage range

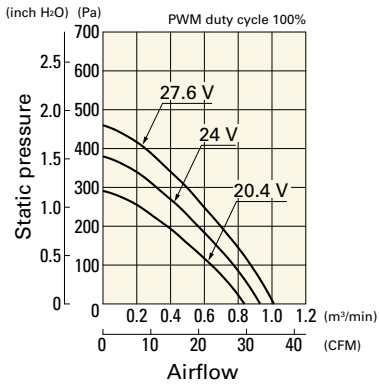

PWM duty - Speed characteristics example

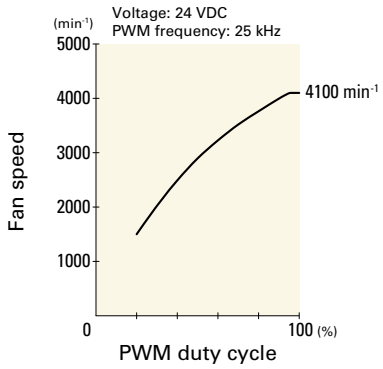

Dimensions (unit: mm)

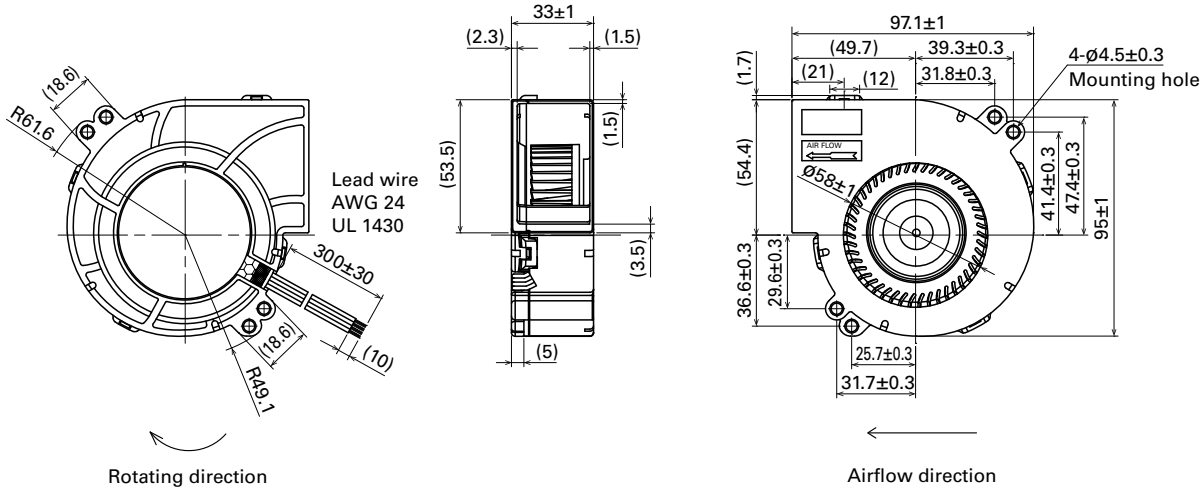

Oil Proof Fan

Cooling fan capable of operating in an oil-mist environment.
Related product: Splash Proof Fan p. 255, Splash Proof Centrifugal Fan p. 315, Splash Proof Blower p. 341

Model Numbering System

Not every combination of the following codes or characters is available. Contact us for an available combination.

9WF	12	24	H	1	01	
Type name	Frame size	Voltage	Speed code	Frame thickness	Sensor specifications	Frame form

Type name	9WF 9WFA
Frame size (mm)	04 (40×40) 06 (60×60) 08 (80×80) 09 (92×92) 12 (120×120)
Voltage (V)	24 (24)
Speed code	H
Frame thickness (mm)	1 (38) 2 (32) 4 (25) 6 (20) 7 (15)
Sensor specifications	01, 001 With a pulse sensor; 02, 002 Without a sensor; D01, D001 With a lock sensor
Frame form	Nil Ribbed frame

How to Read Specifications (DC fan)

The following is a sample. See respective product pages for detailed information.

Model no.	Rated voltage [V]	Operating voltage range [V]	Rated current [A]	Rated input [W]	Rated speed [min⁻¹]	Max. airflow [m³/min]	Max. airflow [CFM]	Max. static pressure [Pa]	Max. static pressure [inchH₂O]	SPL [dB (A)]	Operating temperature [°C]	Expected life [h]
9GA0412G7001	12	7 to 13.8	0.17	2.04	13100	0.36	12.7	192	0.77	42	-20 to +70	40000/60°C (70000/40°C)

Rated voltage ····· This is the necessary voltage to drive the fan. E.g.) 12 VDC, 24 VDC, 48 VDC
Operating voltage range ····· The voltage range over which fan operation is guaranteed.
Rated current ····· The current when the fan is operating at rated voltage (at free air).
Rated input ····· The power value when the fan is operating at rated voltage (at free air).
Rated speed ····· The speed when the fan is operating at rated voltage (at free air).
Max. airflow ····· The airflow at 0 Pa static pressure when the fan is operating at rated voltage. (Measured using the double chamber method)
Max. static pressure ····· The static pressure at 0 m^3/min airflow when the fan is operating at rated voltage. (Measured using the double chamber method)
SPL ····· A-weighted sound pressure level (SPL) when the fan operates at the rated speed.
For the measurement method, see the Technical Materials section in the catalog.
Operating temperature ····· The temperature range over which fan operation is guaranteed (Non-condensing).
Expected life ····· Service life hours that 90% of bearings will survive without failing when continuously operated at the rated voltage and 60°C temperature. Expected life at 40°C is for reference only.
For more information, please refer to the technical material section.

40×40×15 mm

San Ace 40WF 9WF type

General Specifications

- Material ..... Frame: Plastic (Flammability: UL 94V-0), Impeller: Plastic (Flammability: UL 94V-0)
- Expected life ..... See the table below. (L10 life: 90% survival rate for continuous operation in free air at 60˚C, rated voltage) Expected life at 40°C is for reference only.
- Motor protection function ..... Locked rotor burnout protection, Reverse polarity protection For details, please refer to p. 608.
- Dielectric strength ..... 50/60 Hz, 500 VAC, for 1 minute (between lead wire conductors and frame)
- Insulation resistance ..... 10 MΩ min. at 500 VDC (between lead wire conductors and frame)
- Sound pressure level (SPL) ..... A-weighted sound pressure level (SPL) at 1 m away from the air inlet.
- Storage temperature ..... -30 to +70˚C (Non-condensing)
- Lead wire ..... ⊕Red ⊖Black Sensor Yellow
- Mass ..... 35 g

This fan can be used in environments with oil mist.*
* Environment where cutting oil creates oil mist. Conduct a product evaluation with the type of oil to be used.

Specifications

The models listed below **have ribs and a pulse sensor.**

Model no.	Rated voltage [V]	Operating voltage range [V]	Rated current [A]	Rated input [W]	Rated speed [min⁻¹]	Max. airflow [m³/min]	Max. airflow [CFM]	Max. static pressure [Pa]	Max. static pressure [inchH₂O]	SPL [dB (A)]	Operating temperature [˚C]	Expected life [h]
9WF0424H701	24	20.4 to 27.6	0.085	2.04	11300	0.195	6.9	80	0.32	38	-20 to +70	40000/60˚C (70000/40˚C)

Note: Sensor and control options are available for selection. Refer to the table on p. 650.

Airflow - Static Pressure Characteristics

9WF0424H701 With pulse sensor

Operating voltage range

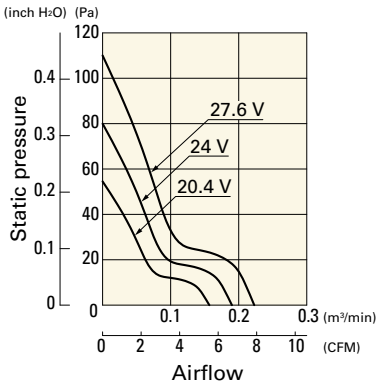

Dimensions (unit: mm)

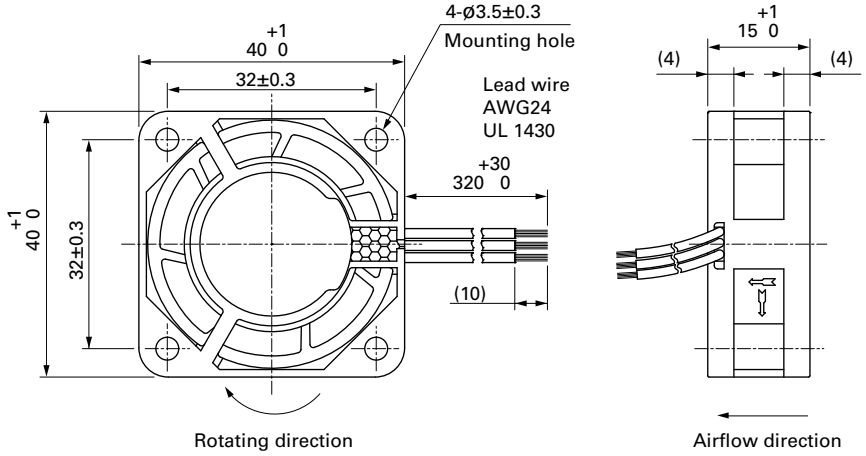

Reference Dimensions of Mounting Holes and Vent Opening (unit: mm)

Inlet side, Outlet side

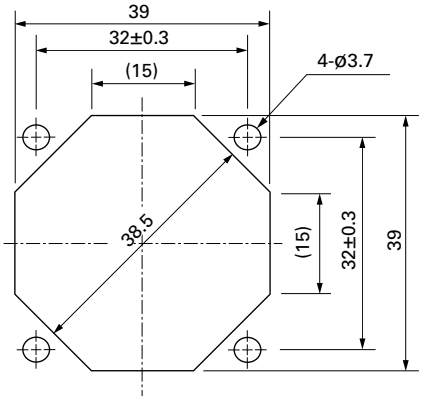

Options

Finger guards page: p. 590

Model no.: 109-059, 109-059H

40×40×20 mm

San Ace 40WF 9WFA type

General Specifications

- Material ..... Frame: Plastic (Flammability: UL 94V-0), Impeller: Plastic (Flammability: UL 94V-0)
- Expected life ..... See the table below. (L10 life: 90% survival rate for continuous operation in free air at 60˚C, rated voltage) Expected life at 40°C is for reference only.
- Motor protection function ..... Locked rotor burnout protection, Reverse polarity protection For details, please refer to p. 608.
- Dielectric strength ..... 50/60 Hz, 500 VAC, for 1 minute (between lead wire conductors and frame)
- Insulation resistance ..... 10 MΩ min. at 500 VDC (between lead wire conductors and frame)
- Sound pressure level (SPL) ..... A-weighted sound pressure level (SPL) at 1 m away from the air inlet.
- Storage temperature ..... -30 to +70˚C (Non-condensing)
- Lead wire ..... ⊕Red ⊖Black Sensor Yellow
- Mass ..... 45 g

This fan can be used in environments with oil mist.*
* Environment where cutting oil creates oil mist. Conduct a product evaluation with the type of oil to be used.

Specifications

The models listed below **have ribs and a pulse sensor.**

Model no.	Rated voltage [V]	Operating voltage range [V]	Rated current [A]	Rated input [W]	Rated speed [min⁻¹]	Max. airflow [m³/min]	Max. airflow [CFM]	Max. static pressure [Pa]	Max. static pressure [inchH₂O]	SPL [dB (A)]	Operating temperature [˚C]	Expected life [h]
9WFA0424G6001	24	20.4 to 27.6	0.11	2.6	17000	0.31	10.9	170	0.68	48	-20 to +70	40000/60˚C (70000/40˚C)

Note: Sensor and control options are available for selection. Refer to the table on p. 650.

Airflow - Static Pressure Characteristics

9WFA0424G6001 With pulse sensor

Operating voltage range

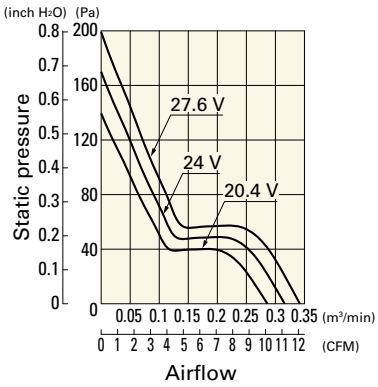

Dimensions (unit: mm)

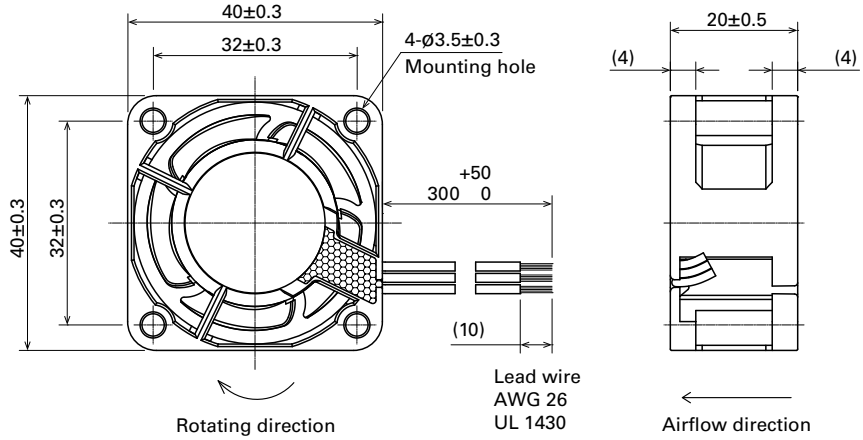

Reference Dimensions of Mounting Holes and Vent Opening (unit: mm)

Inlet side, Outlet side

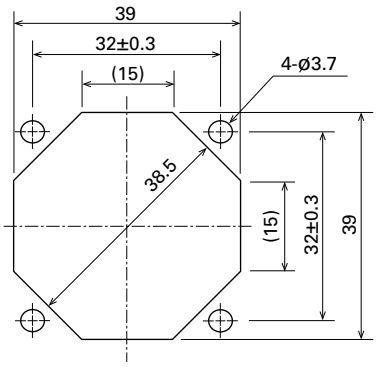

Options

Finger guards page: p. 590

Model no.: 109-059, 109-059H

60×60×15 mm

San Ace 60WF 9WF type

General Specifications

- Material ..... Frame: Plastic (Flammability: UL 94V-0), Impeller: Plastic (Flammability: UL 94V-0)
- Expected life ..... See the table below. (L10 life: 90% survival rate for continuous operation in free air at 60˚C, rated voltage) Expected life at 40°C is for reference only.
- Motor protection function ..... Locked rotor burnout protection, Reverse polarity protection For details, please refer to p. 608.
- Dielectric strength ..... 50/60 Hz, 500 VAC, for 1 minute (between lead wire conductors and frame)
- Insulation resistance ..... 10 MΩ min. at 500 VDC (between lead wire conductors and frame)
- Sound pressure level (SPL) ..... A-weighted sound pressure level (SPL) at 1 m away from the air inlet.
- Storage temperature ..... -30 to +70˚C (Non-condensing)
- Lead wire ..... ⊕Red ⊖Black Sensor Yellow
- Mass ..... 62 g

This fan can be used in environments with oil mist.*
* Environment where cutting oil creates oil mist. Conduct a product evaluation with the type of oil to be used.

Specifications

The models listed below **have ribs and a pulse sensor.**

Model no.	Rated voltage [V]	Operating voltage range [V]	Rated current [A]	Rated input [W]	Rated speed [min⁻¹]	Max. airflow [m³/min]	Max. airflow [CFM]	Max. static pressure [Pa]	Max. static pressure [inchH₂O]	SPL [dB (A)]	Operating temperature [˚C]	Expected life [h]
9WF0624H701	24	20.4 to 27.6	0.12	2.88	6800	0.52	18.3	95	0.38	44	-20 to +70	40000/60˚C (70000/40˚C)

Note: Sensor and control options are available for selection. Refer to the table on p. 650.

Airflow - Static Pressure Characteristics

9WF0624H701 With pulse sensor

Operating voltage range

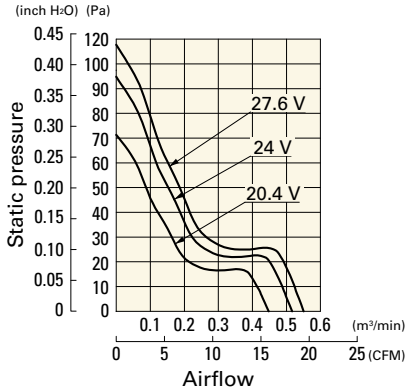

Dimensions (unit: mm)

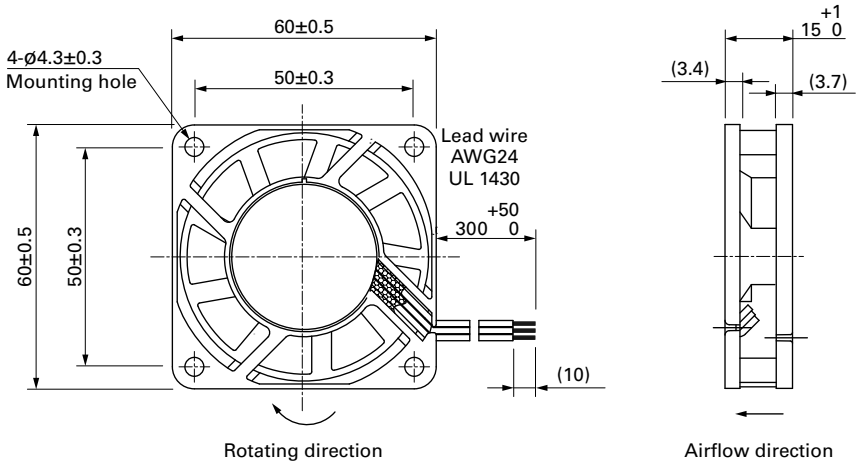

Reference Dimensions of Mounting Holes and Vent Opening (unit: mm)

Inlet side, Outlet side

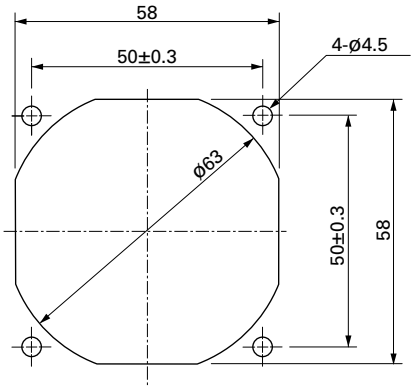

Options

Finger guards page: p. 590

Model no.: 109-139E, 109-139H

60×60×20 mm

San Ace 60WF 9WFA type

General Specifications

- Material ..... Frame: Plastic (Flammability: UL 94V-0), Impeller: Plastic (Flammability: UL 94V-0)
- Expected life ..... See the table below. (L10 life: 90% survival rate for continuous operation in free air at 60˚C, rated voltage) Expected life at 40°C is for reference only.
- Motor protection function ..... Locked rotor burnout protection, Reverse polarity protection For details, please refer to p. 608.
- Dielectric strength ..... 50/60 Hz, 500 VAC, for 1 minute (between lead wire conductors and frame)
- Insulation resistance ..... 10 MΩ min. at 500 VDC (between lead wire conductors and frame)
- Sound pressure level (SPL) ..... A-weighted sound pressure level (SPL) at 1 m away from the air inlet.
- Storage temperature ..... -30 to +70˚C (Non-condensing)
- Lead wire ..... ⊕Red ⊖Black Sensor Yellow
- Mass ..... 85 g

This fan can be used in environments with oil mist.*
* Environment where cutting oil creates oil mist. Conduct a product evaluation with the type of oil to be used.

Specifications

The models listed below **have ribs and a pulse sensor.**

Model no.	Rated voltage [V]	Operating voltage range [V]	Rated current [A]	Rated input [W]	Rated speed [min⁻¹]	Max. airflow [m³/min]	Max. airflow [CFM]	Max. static pressure [Pa]	Max. static pressure [inchH₂O]	SPL [dB (A)]	Operating temperature [˚C]	Expected life [h]
9WFA0624G6001	24	15 to 27.6	0.16	3.8	7700	0.79	27.9	158	0.63	48	-20 to +70	40000/60˚C (70000/40˚C)

Note: Sensor and control options are available for selection. Refer to the table on p. 650.

Airflow - Static Pressure Characteristics

9WFA0624G6001 With pulse sensor

Operating voltage range

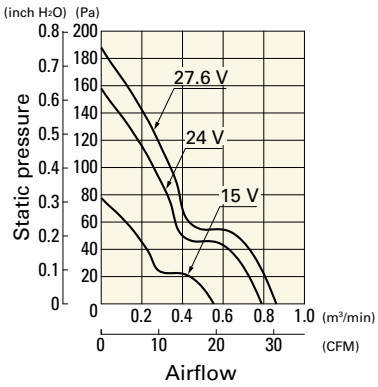

Dimensions (unit: mm)

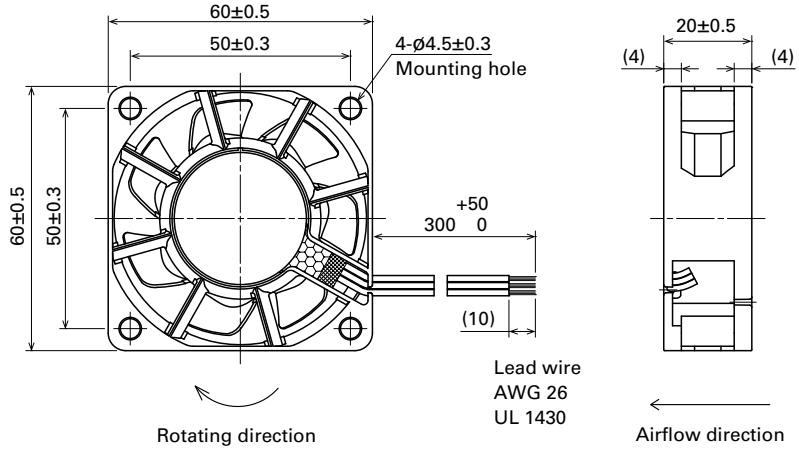

Reference Dimensions of Mounting Holes and Vent Opening (unit: mm)

Inlet side, Outlet side

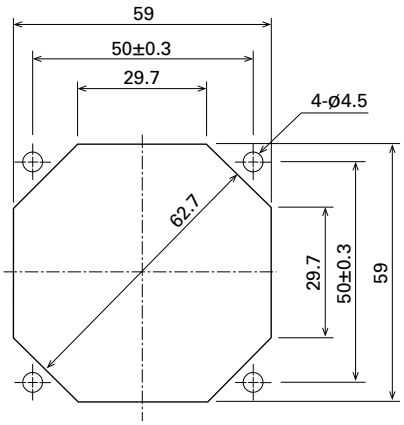

Options

Finger guards page: p. 590

Model no.: 109-139E, 109-139H

60×60×25 mm

San Ace 60WF 9WF type

General Specifications

- Material ..... Frame: Plastic (Flammability: UL 94V-0), Impeller: Plastic (Flammability: UL 94V-0)
- Expected life ..... See the table below. (L10 life: 90% survival rate for continuous operation in free air at 60˚C, rated voltage) Expected life at 40°C is for reference only.
- Motor protection function ..... Locked rotor burnout protection, Reverse polarity protection For details, please refer to p. 608.
- Dielectric strength ..... 50/60 Hz, 500 VAC, for 1 minute (between lead wire conductors and frame)
- Insulation resistance ..... 10 MΩ min. at 500 VDC (between lead wire conductors and frame)
- Sound pressure level (SPL) ..... A-weighted sound pressure level (SPL) at 1 m away from the air inlet.
- Storage temperature ..... -30 to +70˚C (Non-condensing)
- Lead wire ..... ⊕Red ⊖Black Sensor Yellow
- Mass ..... 110 g

This fan can be used in environments with oil mist.*
* Environment where cutting oil creates oil mist. Conduct a product evaluation with the type of oil to be used.

Specifications

The models listed below **have ribs and a pulse sensor.**

Model no.	Rated voltage [V]	Operating voltage range [V]	Rated current [A]	Rated input [W]	Rated speed [min^{-1}]	Max. airflow [m³/min]	Max. airflow [CFM]	Max. static pressure [Pa]	Max. static pressure [inchH₂O]	SPL [dB (A)]	Operating temperature [˚C]	Expected life [h]
9WF0624H401	24	20.4 to 27.6	0.15	3.6	6500	0.67	23.6	97	0.38	41	-20 to +70	40000/60˚C (70000/40˚C)

Note: Sensor and control options are available for selection. Refer to the table on p. 650.

Airflow - Static Pressure Characteristics

9WF0624H401 With pulse sensor

Operating voltage range

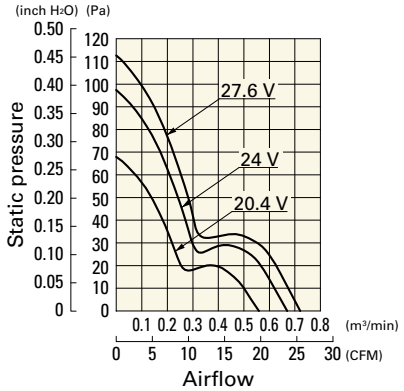

Dimensions (unit: mm)

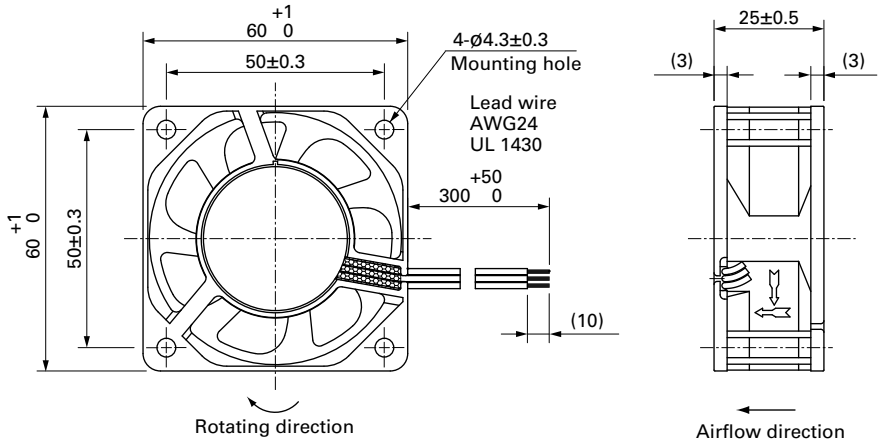

Reference Dimensions of Mounting Holes and Vent Opening (unit: mm)

Inlet side, Outlet side

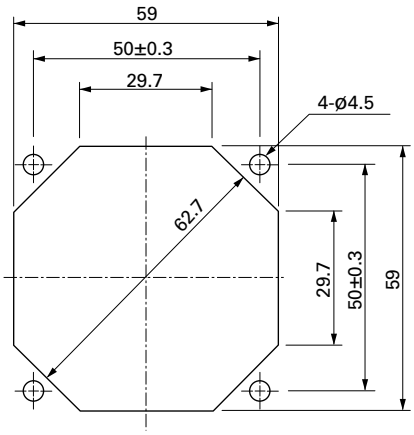

Options

Finger guards page: p. 590

Model no.: 109-139E, 109-139H

80×80×20 mm

San Ace 80WF 9WFA type

General Specifications

- Material ..... Frame: Plastic (Flammability: UL 94V-0), Impeller: Plastic (Flammability: UL 94V-0)
- Expected life ..... See the table below. (L10 life: 90% survival rate for continuous operation in free air at 60˚C, rated voltage) Expected life at 40°C is for reference only.
- Motor protection function ..... Locked rotor burnout protection, Reverse polarity protection For details, please refer to p. 608.
- Dielectric strength ..... 50/60 Hz, 500 VAC, for 1 minute (between lead wire conductors and frame)
- Insulation resistance ..... 10 MΩ min. at 500 VDC (between lead wire conductors and frame)
- Sound pressure level (SPL) ..... A-weighted sound pressure level (SPL) at 1 m away from the air inlet.
- Storage temperature ..... -30 to +70˚C (Non-condensing)
- Lead wire ..... ⊕Red ⊖Black Sensor Yellow
- Mass ..... 105 g

This fan can be used in environments with oil mist.*
* Environment where cutting oil creates oil mist. Conduct a product evaluation with the type of oil to be used.

Specifications

The models listed below **have ribs and a pulse sensor.**

Model no.	Rated voltage [V]	Operating voltage range [V]	Rated current [A]	Rated input [W]	Rated speed [min⁻¹]	Max. airflow [m³/min]	Max. airflow [CFM]	Max. static pressure [Pa]	Max. static pressure [inchH₂O]	SPL [dB (A)]	Operating temperature [˚C]	Expected life [h]
9WFA0824G6001	24	15 to 27.6	0.15	3.6	6000	1.44	50.8	105	0.42	48	-20 to +70	40000/60˚C (70000/40˚C)

Note: Sensor and control options are available for selection. Refer to the table on p. 650.

Airflow - Static Pressure Characteristics

9WFA0824G6001 With pulse sensor

Operating voltage range

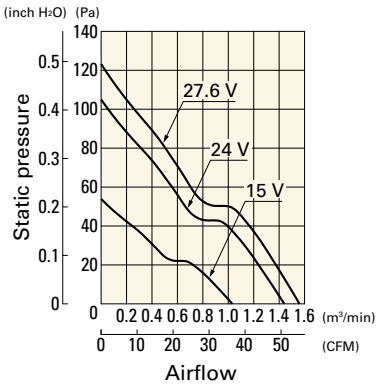

Dimensions (unit: mm)

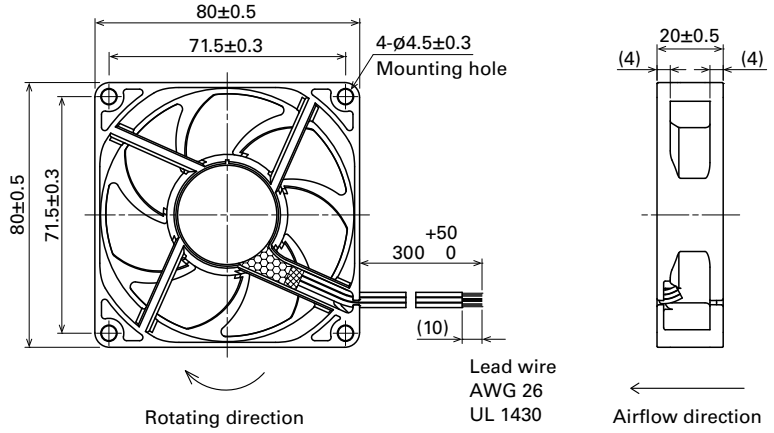

Reference Dimensions of Mounting Holes and Vent Opening (unit: mm)

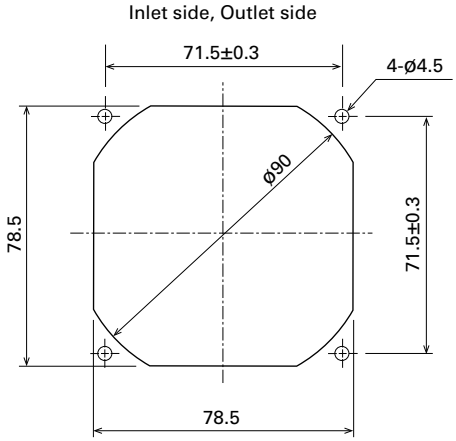

Options

Finger guards page: p. 590

Model no.: 109-049E, 109-049H

80×80×25 mm

San Ace 80WF 9WF type

General Specifications

- Material ..... Frame: Plastic (Flammability: UL 94V-0), Impeller: Plastic (Flammability: UL 94V-0)
- Expected life ..... See the table below. (L10 life: 90% survival rate for continuous operation in free air at 60˚C, rated voltage) Expected life at 40°C is for reference only.
- Motor protection function ..... Locked rotor burnout protection, Reverse polarity protection For details, please refer to p. 608.
- Dielectric strength ..... 50/60 Hz, 500 VAC, for 1 minute (between lead wire conductors and frame)
- Insulation resistance ..... 10 MΩ min. at 500 VDC (between lead wire conductors and frame)
- Sound pressure level (SPL) ..... A-weighted sound pressure level (SPL) at 1 m away from the air inlet.
- Storage temperature ..... -30 to +70˚C (Non-condensing)
- Lead wire ..... ⊕Red ⊖Black Sensor Yellow
- Mass ..... 130 g

This fan can be used in environments with oil mist.*
* Environment where cutting oil creates oil mist. Conduct a product evaluation with the type of oil to be used.

Specifications

The models listed below **have ribs and a pulse sensor.**

Model no.	Rated voltage [V]	Operating voltage range [V]	Rated current [A]	Rated input [W]	Rated speed [min⁻¹]	Max. airflow [m³/min]	Max. airflow [CFM]	Max. static pressure [Pa]	Max. static pressure [inchH₂O]	SPL [dB (A)]	Operating temperature [˚C]	Expected life [h]
9WF0824S401	24	20.4 to 27.6	0.16	3.84	4000	1.2	42.4	58	0.23	38	-20 to +70	40000/60˚C (70000/40˚C)

Note: Sensor and control options are available for selection. Refer to the table on p. 650.

Airflow - Static Pressure Characteristics

9WF0824S401 With pulse sensor

Operating voltage range

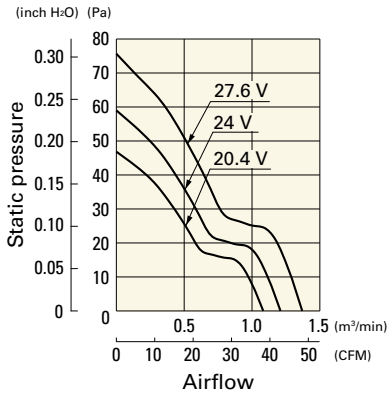

Dimensions (unit: mm)

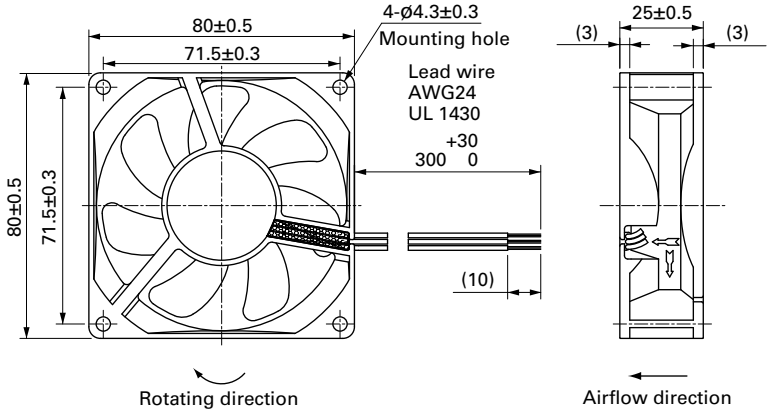

Reference Dimensions of Mounting Holes and Vent Opening (unit: mm)

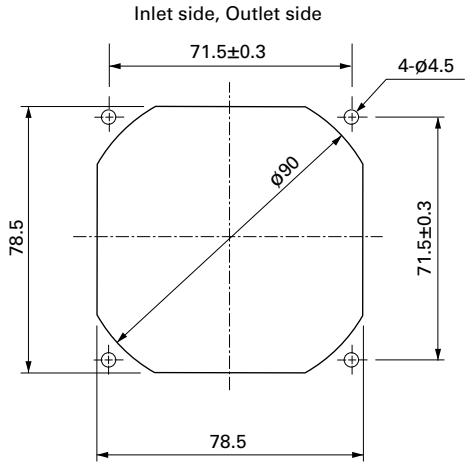

Options

Finger guards page: p. 590

Model no.: 109-049E, 109-049H

92×92×25 mm

San Ace 92WF 9WFA type

General Specifications

- Material ..... Frame: Plastic (Flammability: UL 94V-0), Impeller: Plastic (Flammability: UL 94V-0)
- Expected life ..... See the table below. (L10 life: 90% survival rate for continuous operation in free air at 60˚C, rated voltage) Expected life at 40°C is for reference only.
- Motor protection function ..... Locked rotor burnout protection, Reverse polarity protection For details, please refer to p. 608.
- Dielectric strength ..... 50/60 Hz, 500 VAC, for 1 minute (between lead wire conductors and frame)
- Insulation resistance ..... 10 MΩ min. at 500 VDC (between lead wire conductors and frame)
- Sound pressure level (SPL) ..... A-weighted sound pressure level (SPL) at 1 m away from the air inlet.
- Storage temperature ..... -30 to +70˚C (Non-condensing)
- Lead wire ..... ⊕Red ⊖Black Sensor Yellow
- Mass ..... 170 g

This fan can be used in environments with oil mist.*
* Environment where cutting oil creates oil mist. Conduct a product evaluation with the type of oil to be used.

Specifications

The models listed below **have ribs and a pulse sensor.** For models without ribs, append "1" to the end of model numbers.

Model no.	Rated voltage [V]	Operating voltage range [V]	Rated current [A]	Rated input [W]	Rated speed [min⁻¹]	Max. airflow [m³/min]	Max. airflow [CFM]	Max. static pressure [Pa]	Max. static pressure [inchH₂O]	SPL [dB (A)]	Operating temperature [˚C]	Expected life [h]
9WFA0924G4001	24	20.4 to 27.6	0.45	10.8	7350	2.85	100.6	250	1.0	56	-20 to +70	40000/60˚C (70000/40˚C)
9WFA0924H4001			0.28	6.72	6100	2.35	83.0	171	0.69	52		

Note: Sensor and control options are available for selection. Refer to the table on p. 650.

Airflow - Static Pressure Characteristics

9WFA0924G4001 With pulse sensor

Operating voltage range

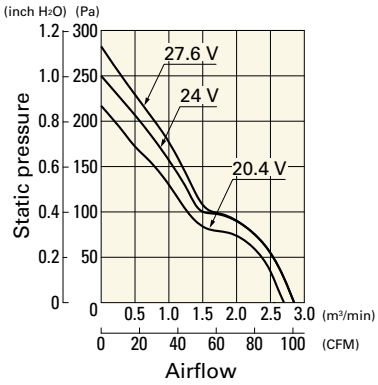

9WFA0924H4001 With pulse sensor

Operating voltage range

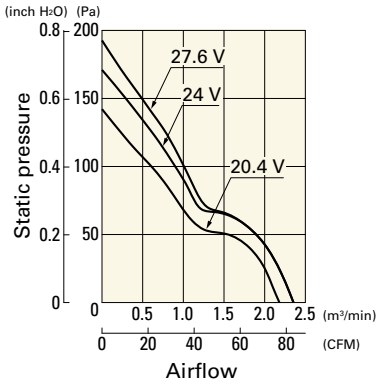

Dimensions (unit: mm)

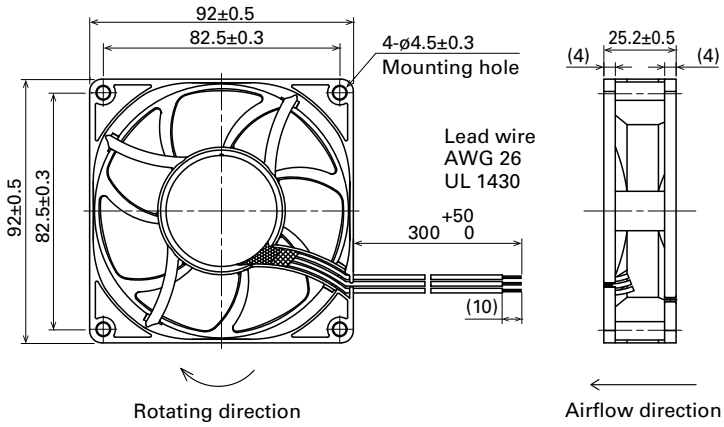

Reference Dimensions of Mounting Holes and Vent Opening (unit: mm)

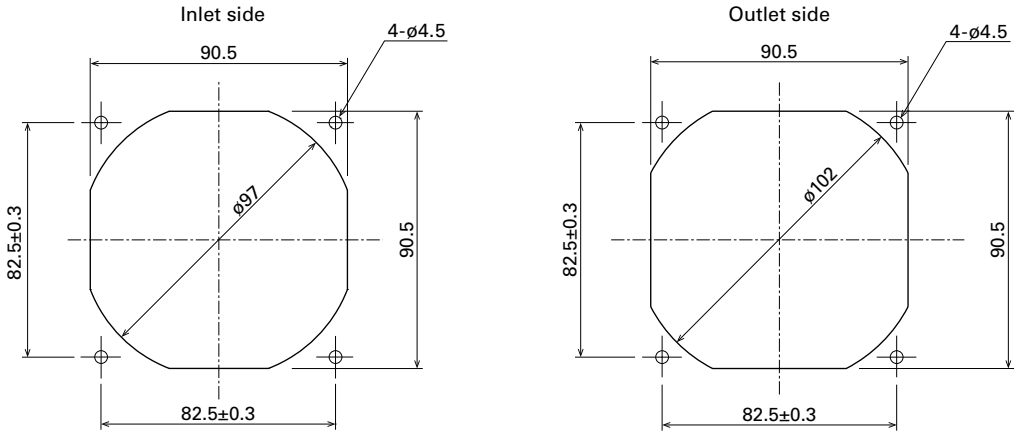

Options

Finger guards page: p. 591

Model no.: 109-099E, 109-099H

92×92×32 mm

San Ace 92WF 9WFA type

General Specifications

- Material ..... Frame: Plastic (Flammability: UL 94V-0), Impeller: Plastic (Flammability: UL 94V-0)
- Expected life ..... See the table below. (L10 life: 90% survival rate for continuous operation in free air at 60˚C, rated voltage) Expected life at 40°C is for reference only.
- Motor protection function ..... Locked rotor burnout protection, Reverse polarity protection For details, please refer to p. 608.
- Dielectric strength ..... 50/60 Hz, 500 VAC, for 1 minute (between lead wire conductors and frame)
- Insulation resistance ..... 10 MΩ min. at 500 VDC (between lead wire conductors and frame)
- Sound pressure level (SPL) ..... A-weighted sound pressure level (SPL) at 1 m away from the air inlet.
- Storage temperature ..... -30 to +70˚C (Non-condensing)
- Lead wire ..... ⊕Red ⊖Black Sensor Yellow
- Mass ..... 205 g

This fan can be used in environments with oil mist.*
* Environment where cutting oil creates oil mist. Conduct a product evaluation with the type of oil to be used.

Specifications

The models listed below **have ribs and a pulse sensor.**

Model no.	Rated voltage [V]	Operating voltage range [V]	Rated current [A]	Rated input [W]	Rated speed [min⁻¹]	Max. airflow [m³/min]	Max. airflow [CFM]	Max. static pressure [Pa]	Max. static pressure [inchH₂O]	SPL [dB (A)]	Operating temperature [˚C]	Expected life [h]
9WFA0924G2001	24	12 to 27.6	0.58	13.9	9600	3.1	109.5	380	1.53	63	-20 to +70	40000/60˚C (70000/40˚C)

Note: Sensor and control options are available for selection. Refer to the table on p. 650.

Airflow - Static Pressure Characteristics

9WFA0924G2001 With pulse sensor

Operating voltage range

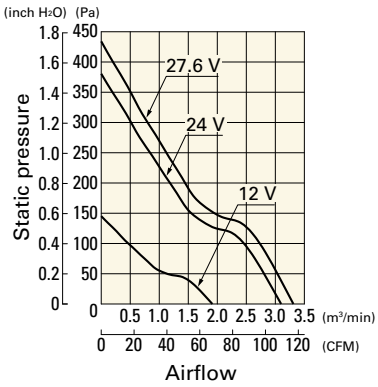

Dimensions (unit: mm)

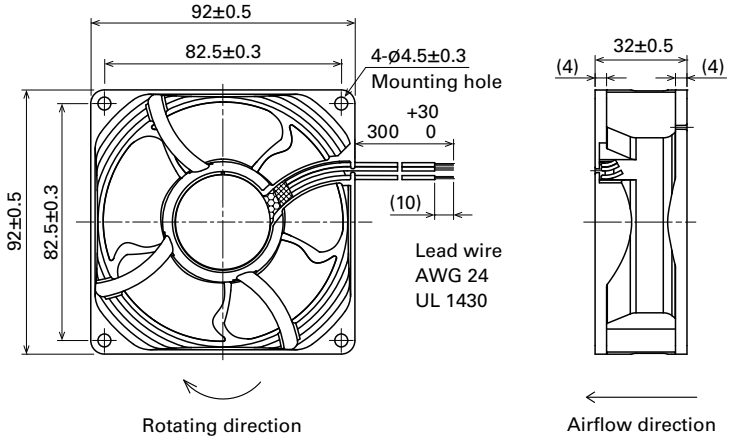

Reference Dimensions of Mounting Holes and Vent Opening (unit: mm)

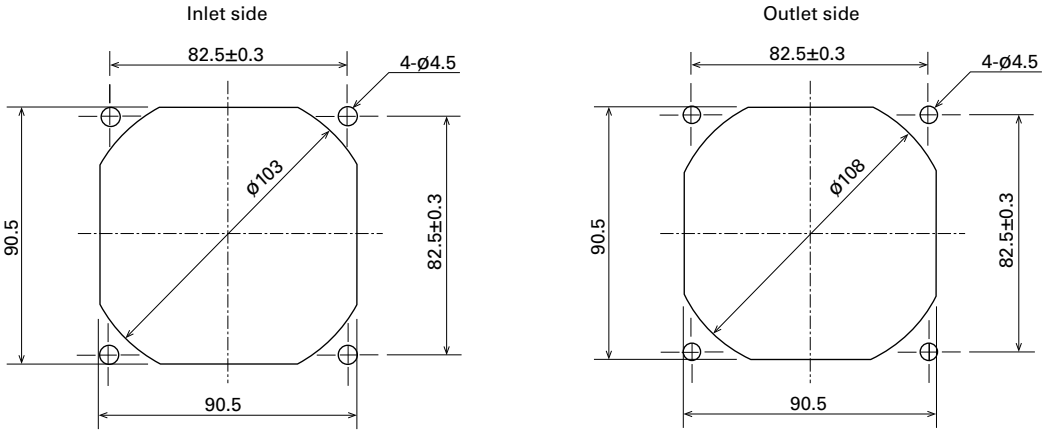

Options

Finger guards page: p. 591

Model no.: 109-099E, 109-099H

120×120×38 mm

San Ace 120WF 9WF type

General Specifications

- Material ..... Frame: Plastic (Flammability: UL 94V-0), Impeller: Plastic (Flammability: UL 94V-0)
- Expected life ..... See the table below. (L10 life: 90% survival rate for continuous operation in free air at 60˚C, rated voltage) Expected life at 40°C is for reference only.
- Motor protection function ..... Locked rotor burnout protection, Reverse polarity protection For details, please refer to p. 608.
- Dielectric strength ..... 50/60 Hz, 500 VAC, for 1 minute (between lead wire conductors and frame)
- Insulation resistance ..... 10 MΩ min. at 500 VDC (between lead wire conductors and frame)
- Sound pressure level (SPL) ..... A-weighted sound pressure level (SPL) at 1 m away from the air inlet.
- Storage temperature ..... -30 to +70˚C (Non-condensing)
- Lead wire ..... ⊕Red ⊖Black Sensor Yellow
- Mass ..... 355 g

This fan can be used in environments with oil mist.*
* Environment where cutting oil creates oil mist. Conduct a product evaluation with the type of oil to be used.

Specifications

The models listed below **have ribs and a pulse sensor.**

Model no.	Rated voltage [V]	Operating voltage range [V]	Rated current [A]	Rated input [W]	Rated speed [min⁻¹]	Max. airflow [m³/min]	Max. airflow [CFM]	Max. static pressure [Pa]	Max. static pressure [inchH₂O]	SPL [dB (A)]	Operating temperature [˚C]	Expected life [h]
9WF1224H101	24	20.4 to 27.6	0.32	7.68	3100	3.34	118	100	0.4	46	-20 to +70	40000/60˚C (70000/40˚C)

Note: Sensor and control options are available for selection. Refer to the table on p. 650.

Airflow - Static Pressure Characteristics

9WF1224H101 With pulse sensor

Operating voltage range

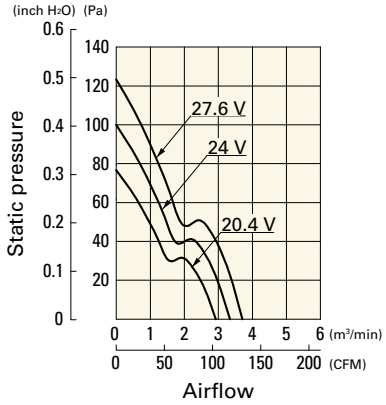

Dimensions (unit: mm)

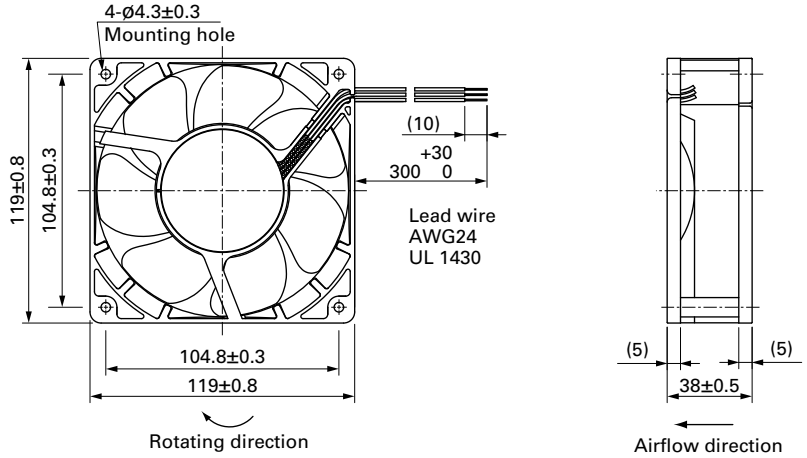

Reference Dimensions of Mounting Holes and Vent Opening (unit: mm)

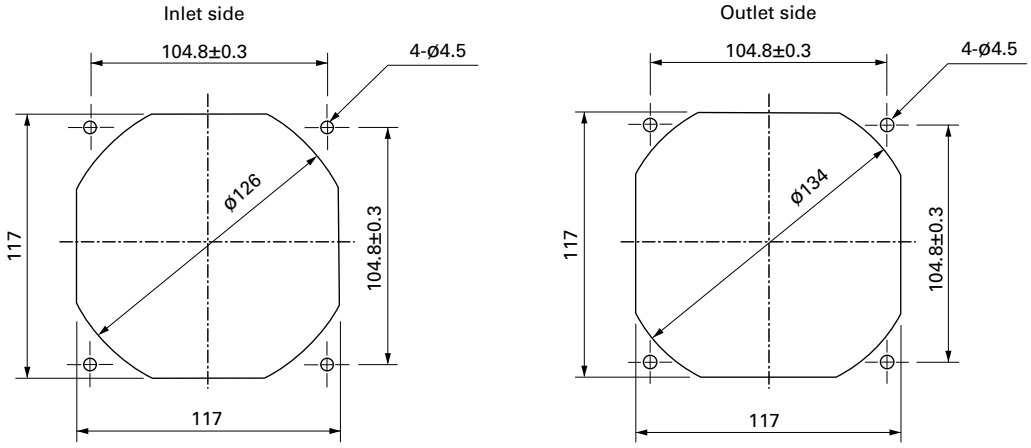

Options

Finger guards page: p. 591

Model no.: 109-019E, 109-019K

Long Life Fan

Cooling fan with Max. 180,000 hours of expected life.
Related product: Splash Proof Fan pp. 264, 270, 276, 285, 289

Model Numbering System

Not every combination of the following codes or characters is available. Contact us for an available combination.

9L	04	12	J	3	01
Type name	Frame size	Voltage	Speed code	Frame thickness	Sensor specifications

Fans with PWM control

9LG	06	12	P	4	S	001
Type name	Frame size	Voltage	PWM control	Frame thickness	Speed code	Individual customer's spec (2 to 3 digits)

Type name	9CRL 9L 9LG etc.
Frame size (mm)	04 (40×40), 06 (60×60), 08 (80×80), 09 (92×92), 12 (120×120), 14 (140×140), 17 (ø172), 57 (ø172×150 (sidecut))
Voltage (V)	12 24 48 / 12 24 48 etc.
Speed code	E F G H J L M S etc.
Frame thickness (mm)	0 (76), 1 (38), 3 (28), 4 (25), 5 (51), 8 (80)
Sensor specifications	01, 001 With a pulse sensor; 02, 002 Without a sensor; D01, D001 With a lock sensor

How to Read Specifications (DC fan)

The following is a sample. See respective product pages for detailed information.

Model no.	Rated voltage [V]	Operating voltage range [V]	Rated current [A]	Rated input [W]	Rated speed [min⁻¹]	Max. airflow [m³/min]	Max. airflow [CFM]	Max. static pressure [Pa]	Max. static pressure [inchH₂O]	SPL [dB (A)]	Operating temperature [°C]	Expected life [h]
9GA0412G7001	12	7 to 13.8	0.17	2.04	13100	0.36	12.7	192	0.77	42	-20 to +70	40000/60°C (70000/40°C)

Rated voltage ····· This is the necessary voltage to drive the fan. E.g.) 12 VDC, 24 VDC, 48 VDC
Operating voltage range ····· The voltage range over which fan operation is guaranteed.
Rated current ····· The current when the fan is operating at rated voltage (at free air).
Rated input ····· The power value when the fan is operating at rated voltage (at free air).
Rated speed ····· The speed when the fan is operating at rated voltage (at free air).
Max. airflow ····· The airflow at 0 Pa static pressure when the fan is operating at rated voltage. (Measured using the double chamber method)
Max. static pressure ····· The static pressure at 0 m^3/min airflow when the fan is operating at rated voltage. (Measured using the double chamber method)
SPL ····· A-weighted sound pressure level (SPL) when the fan operates at the rated speed.
For the measurement method, see the Technical Materials section in the catalog.
Operating temperature ····· The temperature range over which fan operation is guaranteed (Non-condensing).
Expected life ····· Service life hours that 90% of bearings will survive without failing when continuously operated at the rated voltage and 60°C temperature. Expected life at 40°C is for reference only.
For more information, please refer to the technical material section.

40×40×28 mm

San Ace 40L 9LG type

General Specifications

- Material ..... Frame: Aluminum (Black coating), Impeller: Plastic (Flammability: UL 94V-0)
- Expected life ..... See the table below. (L10 life: 90% survival rate for continuous operation in free air at 60˚C, rated voltage) Expected life at 40°C is for reference only.
- Motor protection function ..... Locked rotor burnout protection, Reverse polarity protection For details, please refer to p. 608.
- Dielectric strength ..... 50/60 Hz, 500 VAC, for 1 minute (between lead wire conductors and frame)
- Insulation resistance ..... 10 MΩ min. at 500 VDC (between lead wire conductors and frame)
- Sound pressure level (SPL) ..... A-weighted sound pressure level (SPL) at 1 m away from the air inlet.
- Storage temperature ..... -30 to +70˚C (Non-condensing)
- Lead wire ..... ⊕Red ⊖Black Sensor Yellow Control Brown
- Mass ..... 60 g

Specifications

The models listed below **have a pulse sensor with PWM control.**

Model no.	Rated voltage [V]	Operating voltage range [V]	PWM duty cycle* [%]	Rated current [A]	Rated input [W]	Rated speed [min⁻¹]	Max. airflow [m³/min]	Max. airflow [CFM]	Max. static pressure [Pa]	Max. static pressure [inchH₂O]	SPL [dB (A)]	Operating temperature [˚C]	Expected life [h]
9LG0412P3G001	12	10.2 to 13.8	100	1.9	22.8	33500	0.93	32.9	1780	7.15	68	-20 to +70	80000/60˚C (115000/40˚C)
			20	0.09	1.08	7500	0.2	7.07	89	0.36	33		
9LG0412P3S001			100	1.23	14.8	28000	0.77	27.2	1290	5.18	65		100000/60˚C (135000/40˚C)
			20	0.07	0.84	5700	0.15	5.3	53	0.21	28		
9LG0412P3H001			100	0.69	8.28	22500	0.62	21.9	830	3.33	62		
			20	0.07	0.84	5700	0.15	5.3	53	0.21	28		
9LG0424P3G001	24	21.6 to 26.4	100	0.95	22.8	33500	0.93	32.9	1780	7.15	68		80000/60˚C (115000/40˚C)
			20	0.07	1.68	6800	0.18	6.36	73	0.29	32		
9LG0424P3S001			100	0.61	14.6	28000	0.77	27.2	1290	5.18	65		100000/60˚C (135000/40˚C)
			20	0.05	1.2	5000	0.13	4.59	41	0.16	27		
9LG0424P3H001			100	0.34	8.16	22500	0.62	21.9	830	3.33	62		
			20	0.05	1.2	5000	0.13	4.59	41	0.16	27		

PWM frequency is 25 kHz. Models without ratings for 0% PWM duty cycle have zero speed at 0%. When control terminal is open, speed is the same as at 100% duty cycle.

Airflow - Static Pressure Characteristics / PWM Duty - Speed Characteristics Example

9LG0412P3G001 With pulse sensor with PWM control

PWM duty cycle

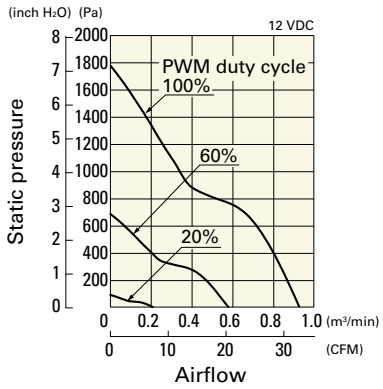

Operating voltage range

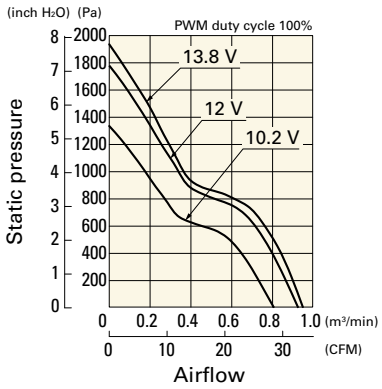

PWM duty - Speed characteristics example

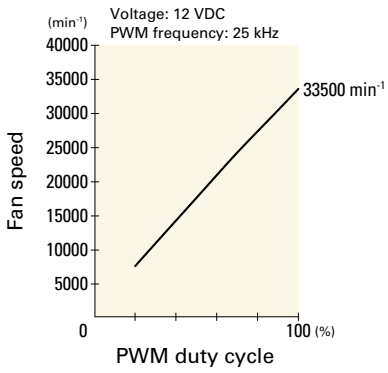

Airflow - Static Pressure Characteristics / PWM Duty - Speed Characteristics Example

9LG0412P3S001 With pulse sensor with PWM control

PWM duty cycle

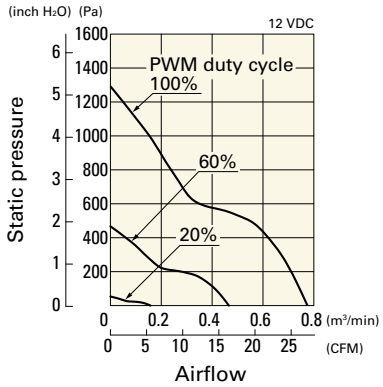

Operating voltage range

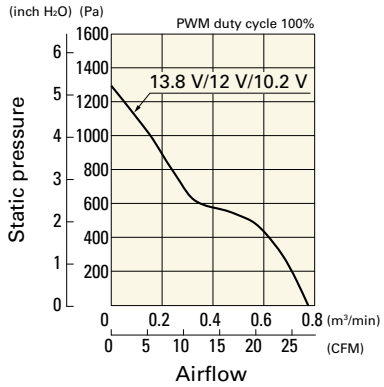

PWM duty - Speed characteristics example

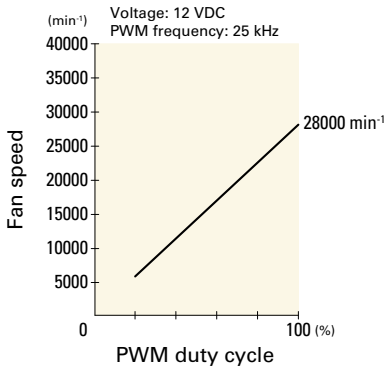

9LG0412P3H001 With pulse sensor with PWM control

PWM duty cycle

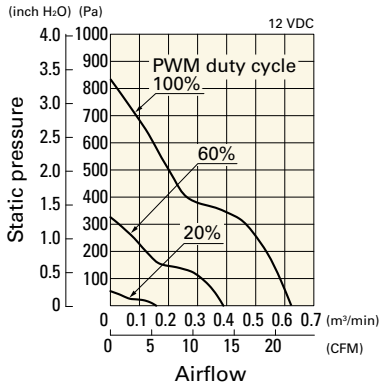

Operating voltage range

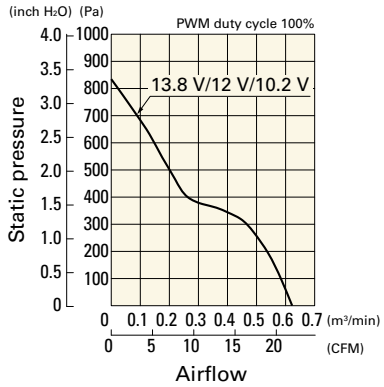

PWM duty - Speed characteristics example

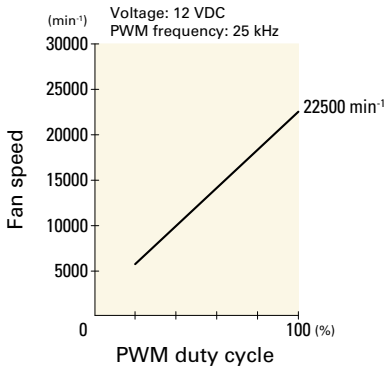

9LG0424P3G001 With pulse sensor with PWM control

PWM duty cycle

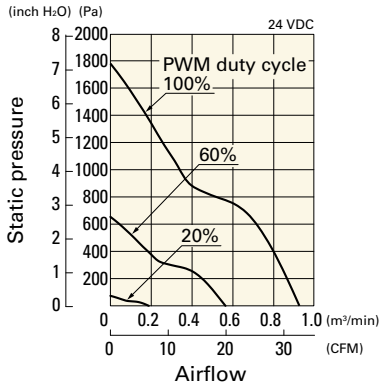

Operating voltage range

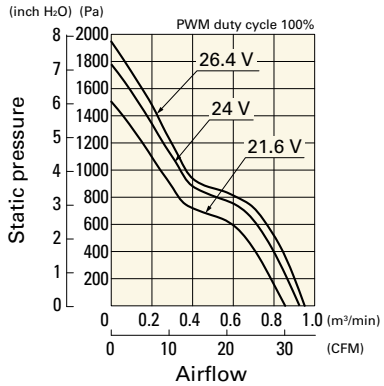

PWM duty - Speed characteristics example

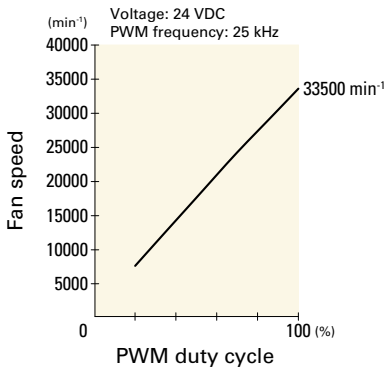

9LG0424P3S001 With pulse sensor with PWM control

PWM duty cycle

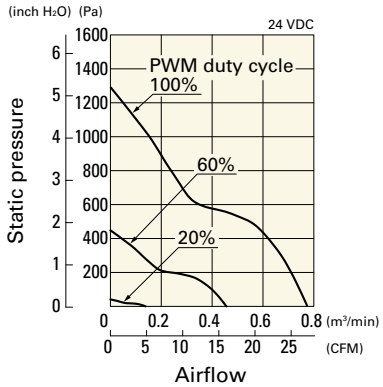

Operating voltage range

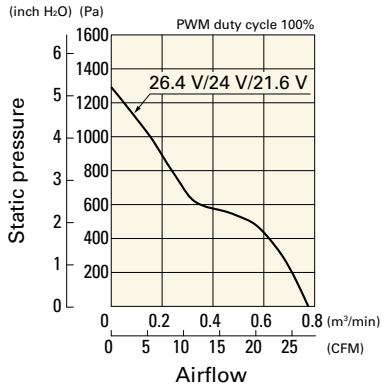

PWM duty - Speed characteristics example

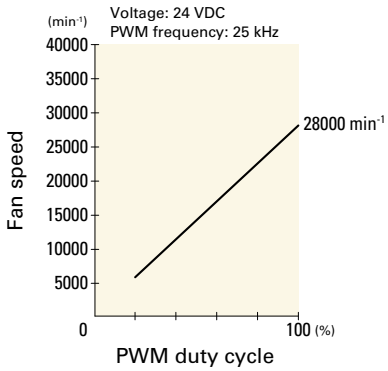

Airflow - Static Pressure Characteristics / PWM Duty - Speed Characteristics Example

9LG0424P3H001 With pulse sensor with PWM control

PWM duty cycle

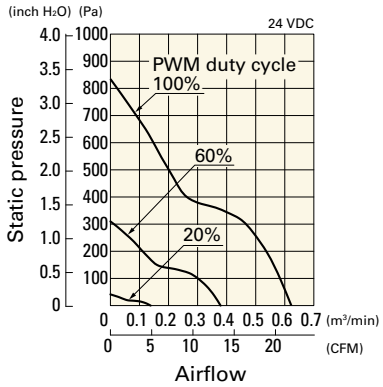

Operating voltage range

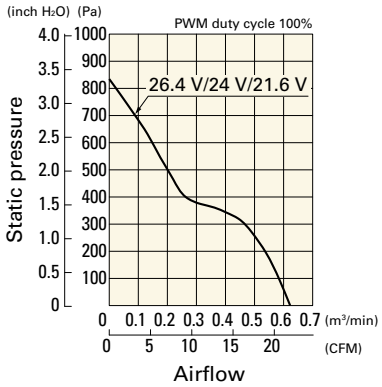

PWM duty - Speed characteristics example

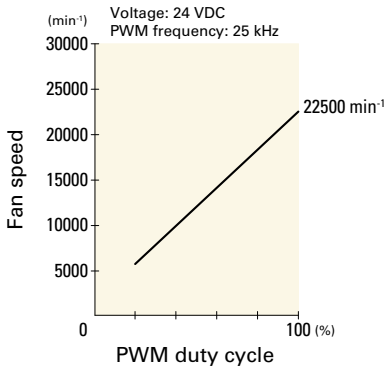

Dimensions (unit: mm)

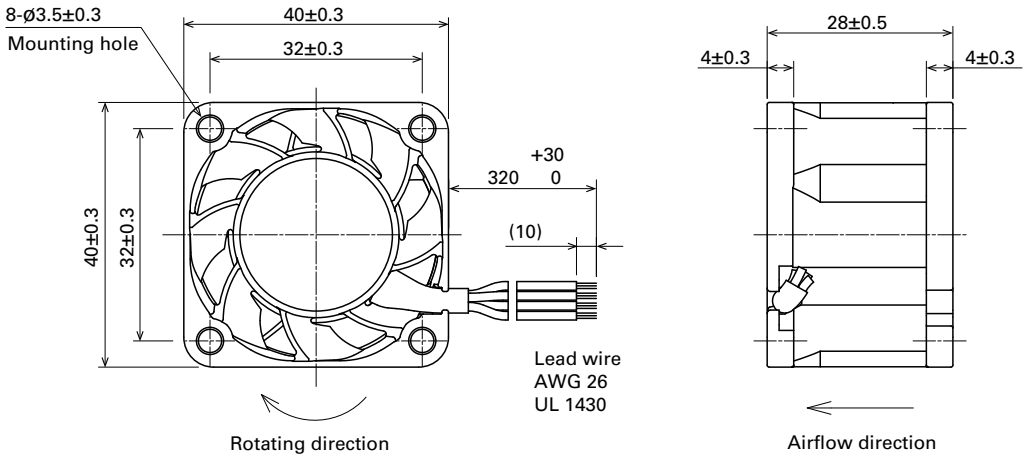

Reference Dimensions of Mounting Holes and Vent Opening (unit: mm)

Inlet side, Outlet side

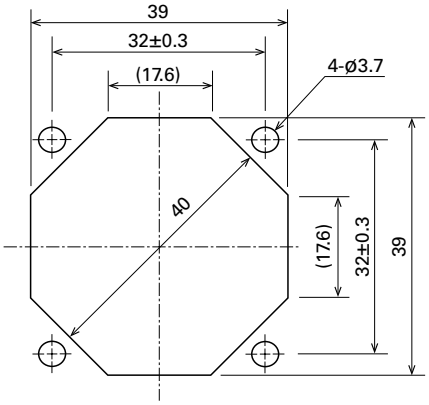

Options

Finger guards page: p. 590

Model no.: 109-059, 109-059H

40×40×28 mm

San Ace 40L 9L type

General Specifications

- Material ..... Frame: Aluminum, Impeller: Plastic (Flammability: UL 94V-0)
- Expected life ..... See the table below. (L10 life: 90% survival rate for continuous operation in free air at 60˚C, rated voltage) Expected life at 40°C is for reference only.
- Motor protection function ..... Locked rotor burnout protection, Reverse polarity protection For details, please refer to p. 608.
- Dielectric strength ..... 50/60 Hz, 500 VAC, for 1 minute (between lead wire conductors and frame)
- Insulation resistance ..... 10 MΩ min. at 500 VDC (between lead wire conductors and frame)
- Sound pressure level (SPL) ..... A-weighted sound pressure level (SPL) at 1 m away from the air inlet.
- Storage temperature ..... -30 to +70˚C (Non-condensing)
- Lead wire ..... ⊕Red ⊖Black Sensor Yellow
- Mass ..... 55 g

Specifications

The models listed below **have a pulse sensor.**

Model no.	Rated voltage [V]	Operating voltage range [V]	Rated current [A]	Rated input [W]	Rated speed [min⁻¹]	Max. airflow [m³/min]	Max. airflow [CFM]	Max. static pressure [Pa]	Max. static pressure [inchH₂O]	SPL [dB (A)]	Operating temperature [˚C]	Expected life [h]
9L0412J301	12	10.2 to 13.8	0.31	3.72	11700	0.52	18.4	206	0.827	48	-20 to +70	100000/60˚C (135000/40˚C)
9L0412H301			0.15	1.8	8400	0.37	13.1	106	0.426	40		
9L0412M301			0.045	0.54	4000	0.16	5.65	24	0.096	19		

Note: Sensor and control options are available for selection. Refer to the table on p. 643.

Airflow - Static Pressure Characteristics

9L0412J301 With pulse sensor

Operating voltage range

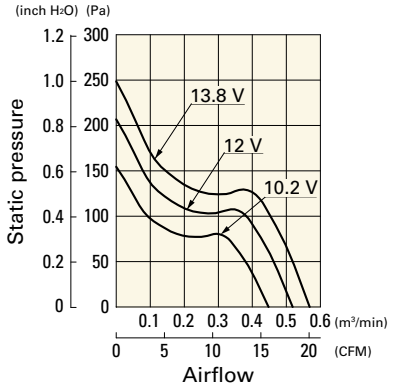

9L0412H301 With pulse sensor

Operating voltage range

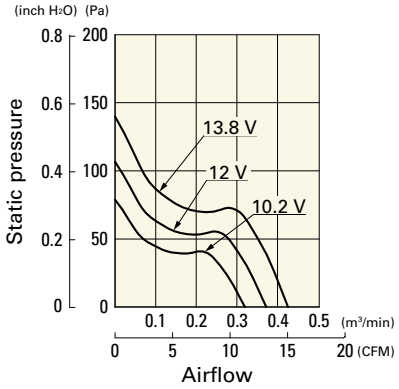

9L0412M301 With pulse sensor

Operating voltage range

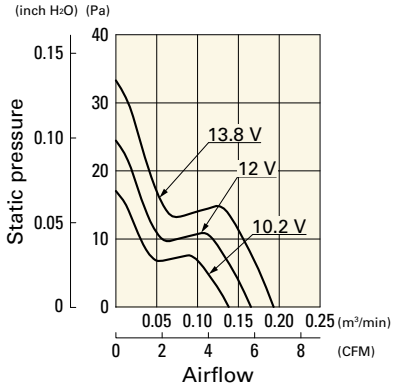

Dimensions (unit: mm)

Screw-mount the fan through both flanges.

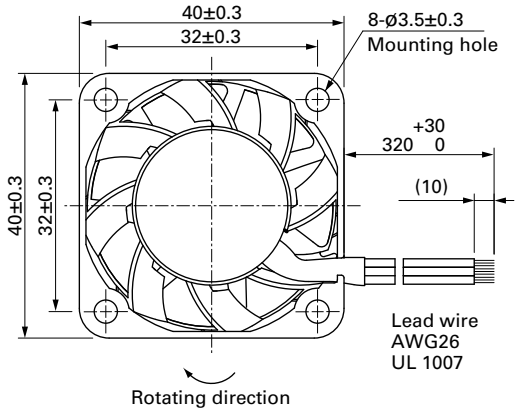

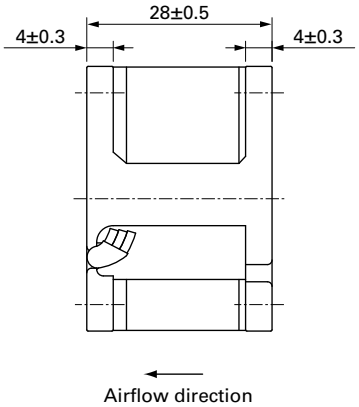

Reference Dimensions of Mounting Holes and Vent Opening (unit: mm)

Inlet side, Outlet side

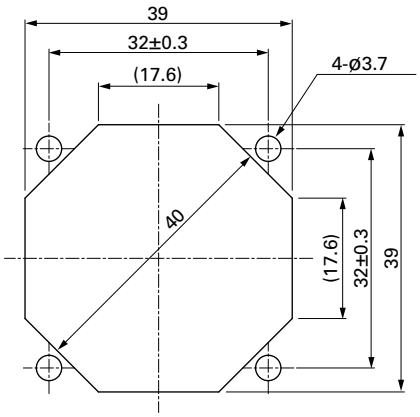

Options

Finger guards page: p. 590

Model no.: 109-059, 109-059H

60×60×25 mm

San Ace 60L 9LG type

General Specifications

- Material ..... Frame: Aluminum, Impeller: Plastic (Flammability: UL 94V-1)
- Expected life ..... See the table below. (L10 life: 90% survival rate for continuous operation in free air at 60˚C, rated voltage) Expected life at 40°C is for reference only.
- Motor protection function ..... Locked rotor burnout protection, Reverse polarity protection For details, please refer to p. 608.
- Dielectric strength ..... 50/60 Hz, 500 VAC, for 1 minute (between lead wire conductors and frame)
- Insulation resistance ..... 10 MΩ min. at 500 VDC (between lead wire conductors and frame)
- Sound pressure level (SPL) ..... A-weighted sound pressure level (SPL) at 1 m away from the air inlet.
- Storage temperature ..... -30 to +70˚C (Non-condensing)
- Lead wire ..... ⊕Red ⊖Black Sensor Yellow Control Brown
- Mass ..... 100 g

Specifications

The models listed below **have a pulse sensor with PWM control.**

Model no.	Rated voltage [V]	Operating voltage range [V]	PWM duty cycle* [%]	Rated current [A]	Rated input [W]	Rated speed [min⁻¹]	Max. airflow [m³/min]	Max. airflow [CFM]	Max. static pressure [Pa]	Max. static pressure [inchH₂O]	SPL [dB (A)]	Operating temperature [˚C]	Expected life [h]
9LG0612P4S001	12	10.8 to 13.2	100	0.67	8.04	11000	1.4	49.4	300	1.204	53	-20 to +70	180000/60˚C (215000/40˚C)
			20	0.06	0.72	2900	0.36	12.7	20.8	0.083	20		
9LG0612P4J001			100	0.39	4.68	8650	1.1	38.8	182	0.73	47		
			25	0.04	0.48	2100	0.26	9.1	10.7	0.042	17		
9LG0612P4H001			100	0.17	2.04	6150	0.78	27.5	97	0.389	35		
			25	0.03	0.36	1350	0.17	6.0	4.7	0.018	14		
9LG0612P4M001			100	0.09	1.08	4200	0.53	18.7	45	0.18	24		
			25	0.03	0.36	900	0.11	3.8	2.0	0.008	14		
9LG0624P4S001	24	21.6 to 26.4	100	0.34	8.16	11000	1.4	49.4	300	1.204	53		
			20	0.03	0.72	2900	0.36	12.7	20.8	0.083	20		
9LG0624P4J001			100	0.19	4.56	8650	1.1	38.8	182	0.73	47		
			20	0.02	0.48	2200	0.28	9.8	12.0	0.048	17		
9LG0624P4H001			100	0.08	1.92	6150	0.78	27.5	97	0.389	35		
			20	0.02	0.48	1300	0.16	5.6	4.3	0.017	14		
9LG0624P4M001			100	0.04	0.96	4200	0.53	18.7	45	0.18	24		
			20	0.01	0.24	800	0.1	3.5	1.6	0.006	14		
9LG0648P4S001	48	36 to 72	100	0.18	8.64	11000	1.4	49.4	305	1.224	53		
			20	0.02	0.96	2900	0.36	12.7	20.8	0.083	20		
9LG0648P4J001			100	0.1	4.8	8650	1.1	38.8	182	0.73	47		
			20	0.02	0.96	2100	0.26	9.1	10.7	0.042	17		
9LG0648P4H001			100	0.06	2.88	6150	0.78	27.5	97	0.389	35		
			20	0.02	0.96	1000	0.12	4.2	2.5	0.01	14		
9LG0648P4M001			100	0.04	1.92	4200	0.53	18.7	45	0.18	24		
			20	0.02	0.96	650	0.08	2.8	1.0	0.004	14		

PWM frequency is 25 kHz. Models without ratings for 0% PWM duty cycle have zero speed at 0%. When control terminal is open, speed is the same as at 100% duty cycle.

Note 1: Sensor and control options are available for selection. Refer to the table on p. 643.
Note 2: The mark indicates Short LeadTime Service applicable models. See p. 664 for details.

Airflow - Static Pressure Characteristics / PWM Duty - Speed Characteristics Example

9LG0612P4S001 With pulse sensor with PWM control

PWM duty cycle

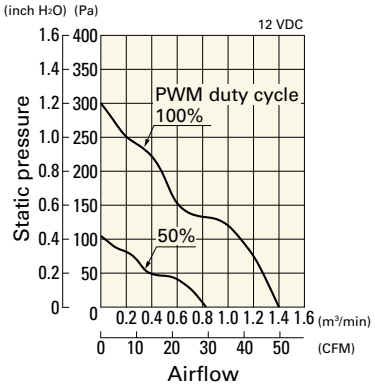

Operating voltage range

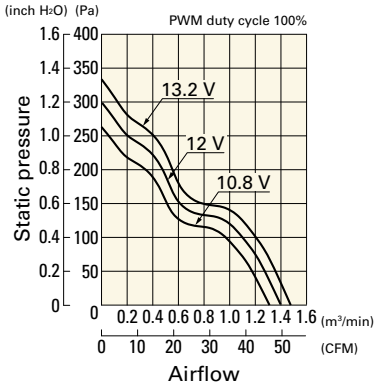

PWM duty - Speed characteristics example

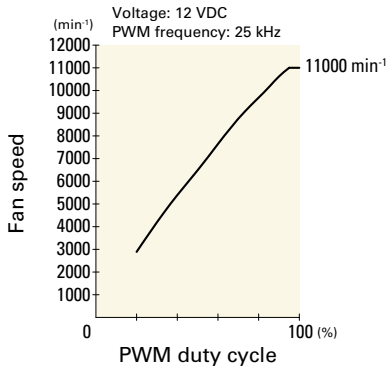

9LG0612P4J001 With pulse sensor with PWM control

PWM duty cycle

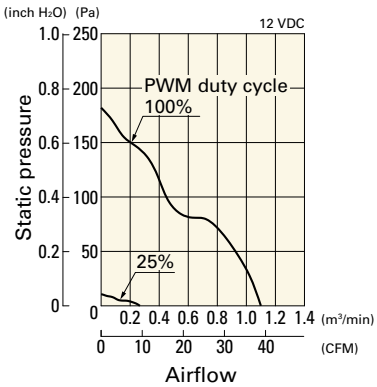

Operating voltage range

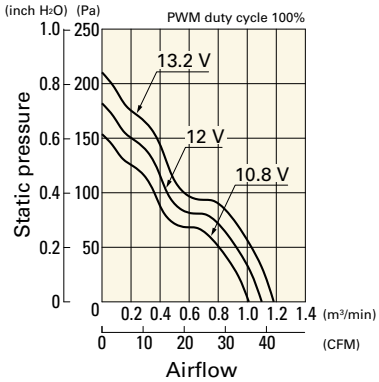

PWM duty - Speed characteristics example

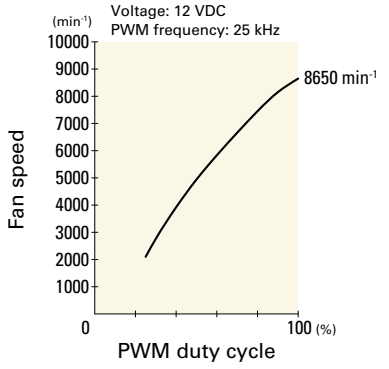

9LG0612P4H001 With pulse sensor with PWM control

PWM duty cycle

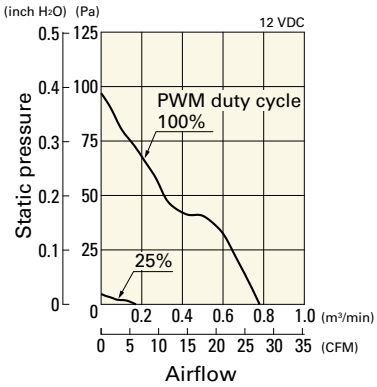

Operating voltage range

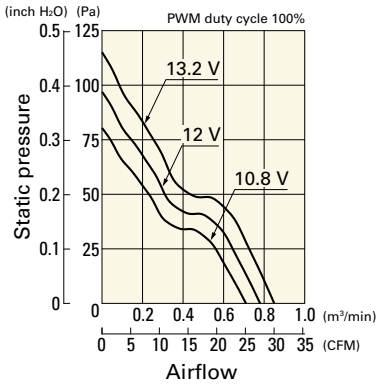

PWM duty - Speed characteristics example

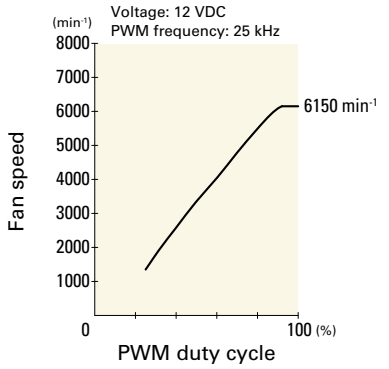

9LG0612P4M001 With pulse sensor with PWM control

PWM duty cycle

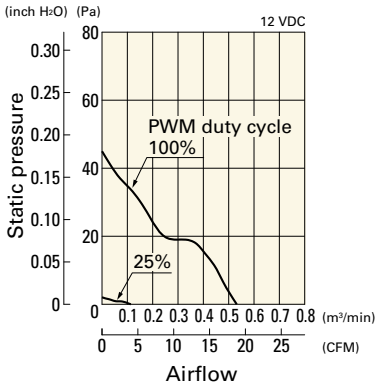

Operating voltage range

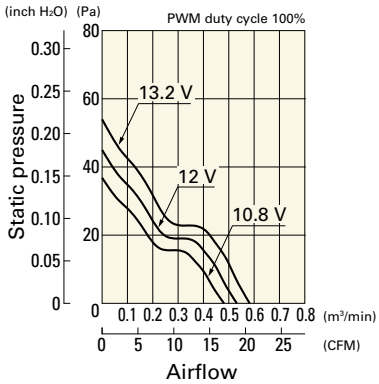

PWM duty - Speed characteristics example

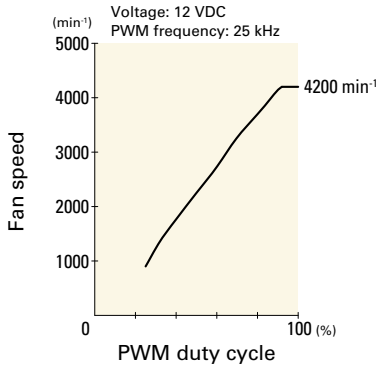

Airflow - Static Pressure Characteristics / PWM Duty - Speed Characteristics Example

9LG0624P4S001 With pulse sensor with PWM control

PWM duty cycle

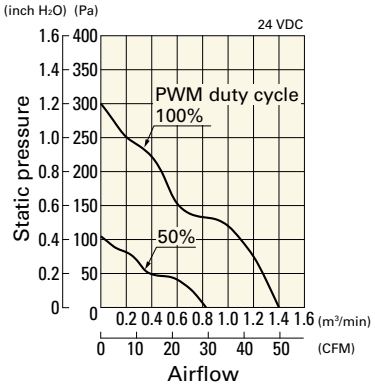

Operating voltage range

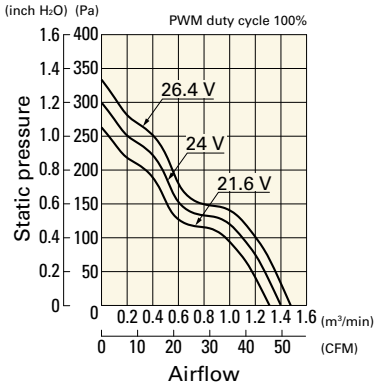

PWM duty - Speed characteristics example

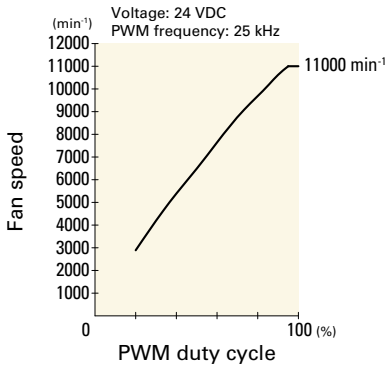

9LG0624P4J001 With pulse sensor with PWM control

PWM duty cycle

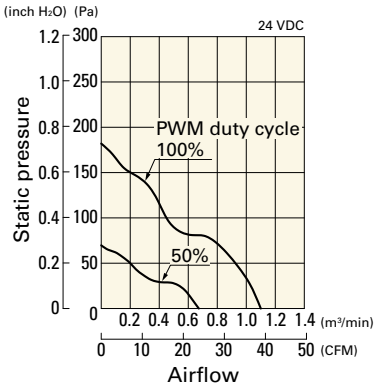

Operating voltage range

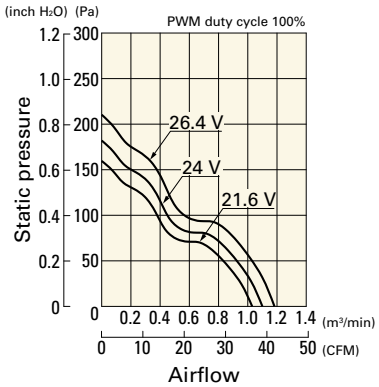

PWM duty - Speed characteristics example

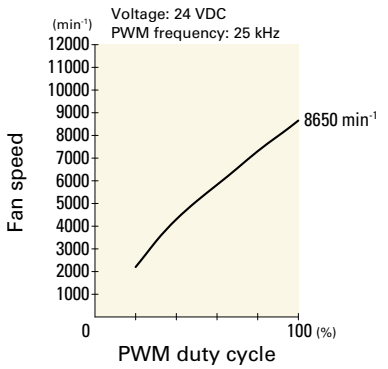

9LG0624P4H001 With pulse sensor with PWM control

PWM duty cycle

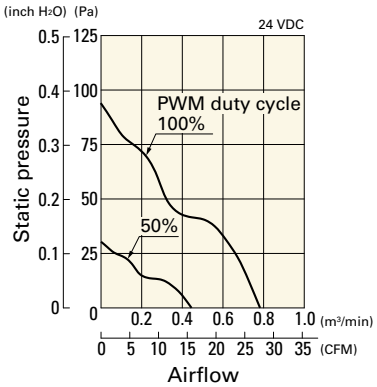

Operating voltage range

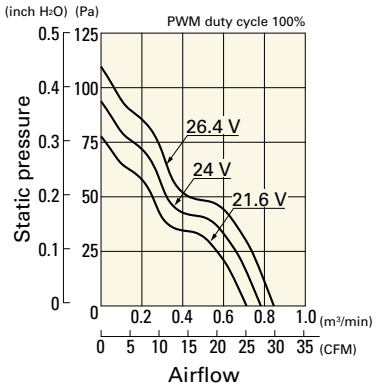

PWM duty - Speed characteristics example

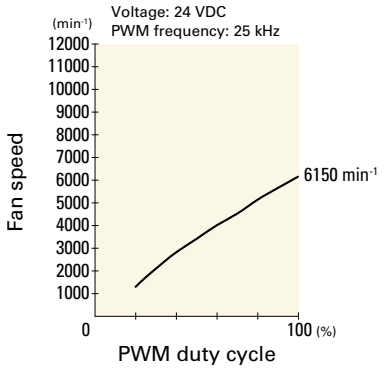

9LG0624P4M001 With pulse sensor with PWM control

PWM duty cycle

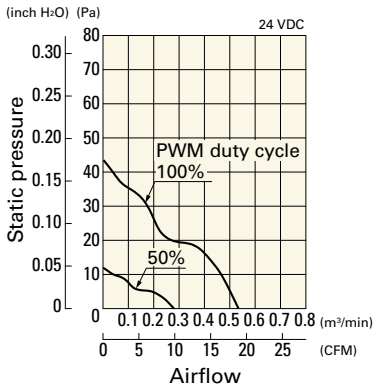

Operating voltage range

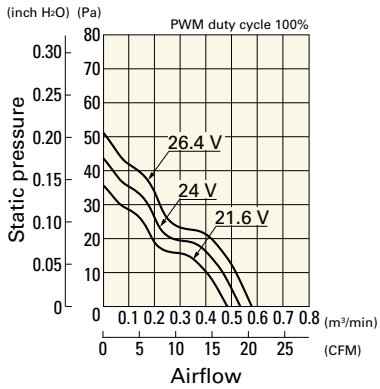

PWM duty - Speed characteristics example

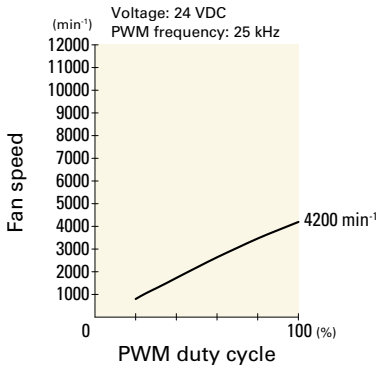

Airflow - Static Pressure Characteristics / PWM Duty - Speed Characteristics Example

9LG0648P4S001 With pulse sensor with PWM control

PWM duty cycle

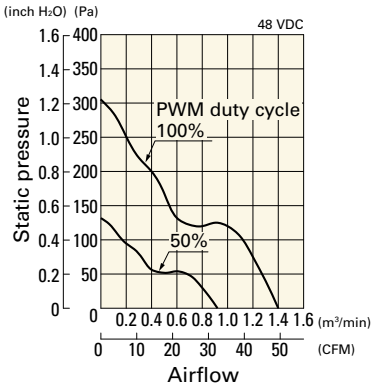

Operating voltage range

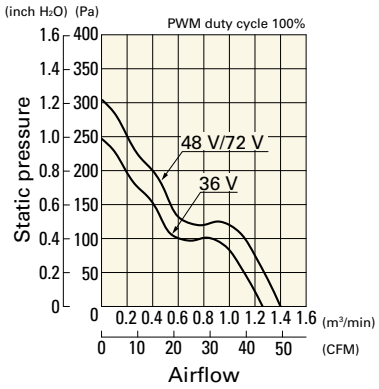

PWM duty - Speed characteristics example

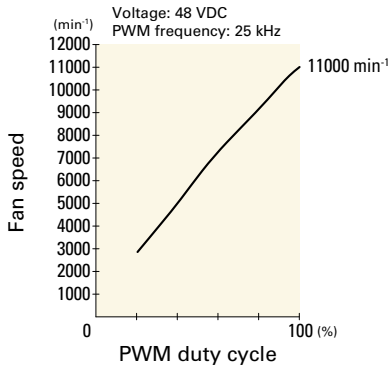

9LG0648P4J001 With pulse sensor with PWM control

PWM duty cycle

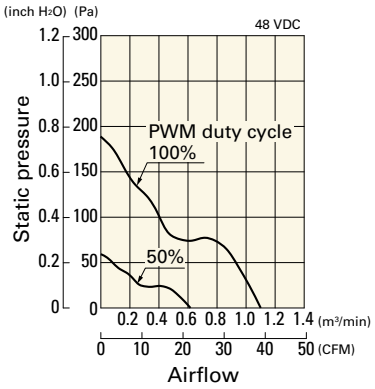

Operating voltage range

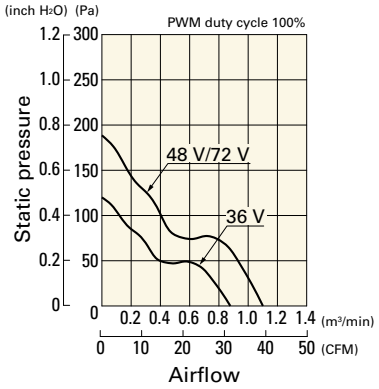

PWM duty - Speed characteristics example

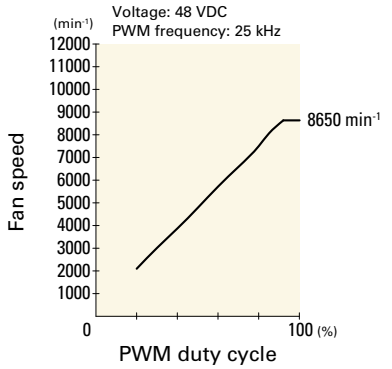

9LG0648P4H001 With pulse sensor with PWM control

PWM duty cycle

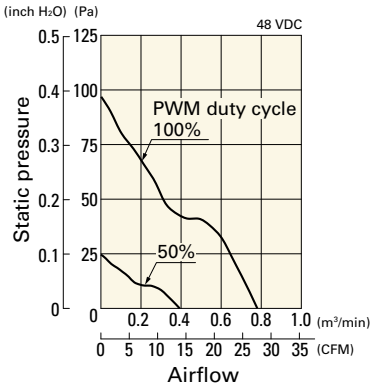

Operating voltage range

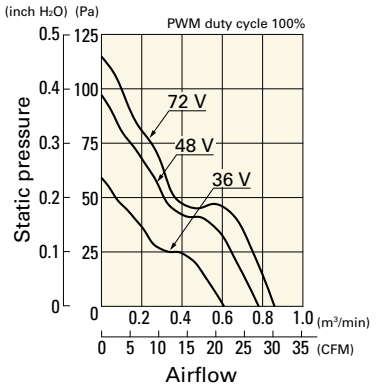

PWM duty - Speed characteristics example

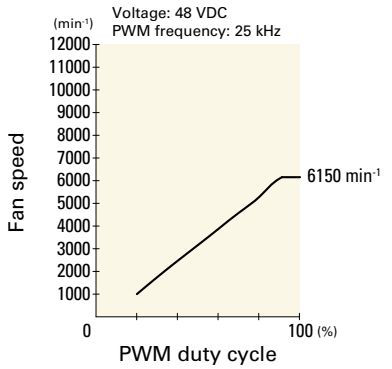

9LG0648P4M001 With pulse sensor with PWM control

PWM duty cycle

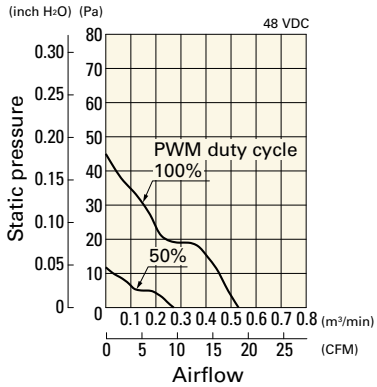

Operating voltage range

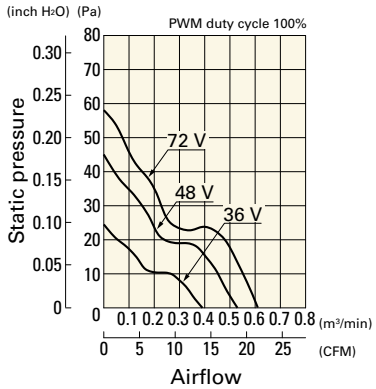

PWM duty - Speed characteristics example

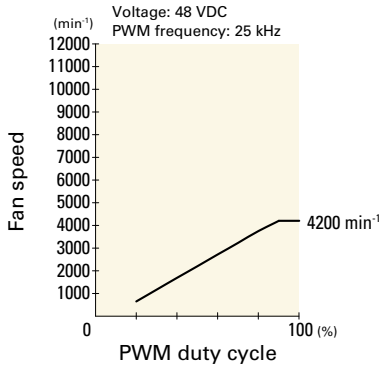

Dimensions (unit: mm)

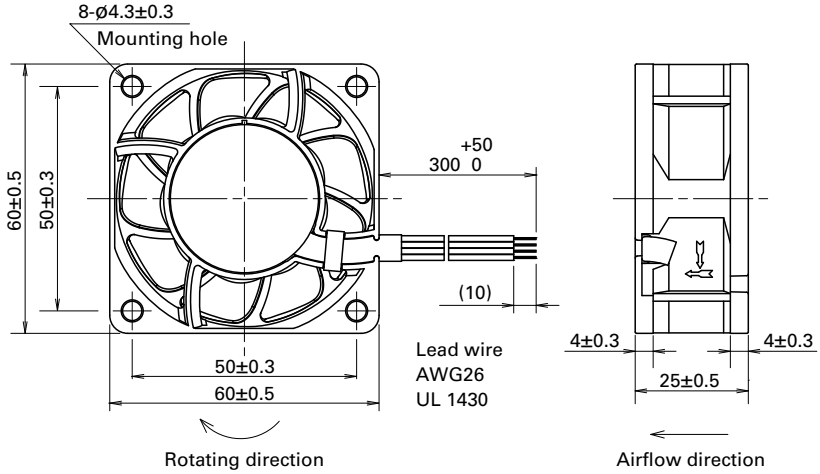

Reference Dimensions of Mounting Holes and Vent Opening (unit: mm)

Inlet side, Outlet side

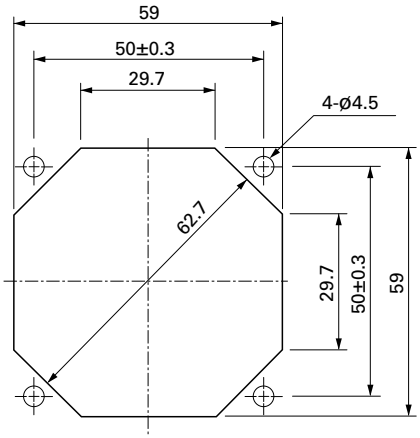

Options

Finger guards page: p. 590

Model no.: 109-139E, 109-139H

Resin filter kits page: p. 598

Model no.: 109-1003F13 (13PPI), 109-1003F20 (20PPI),
109-1003F30 (30PPI), 109-1003F40 (40PPI)

Resin finger guards page: p. 597

Model no.: 109-1003G

60×60×76 mm

San Ace 60L 9CRLB type

General Specifications

- Material ..... Frame: Aluminum (Black coating), Impeller: Plastic (Flammability: UL 94V-1)
- Expected life ..... See the table below. (L10 life: 90% survival rate for continuous operation in free air at 60˚C, rated voltage) Expected life at 40°C is for reference only.
- Motor protection function ..... Locked rotor burnout protection, Reverse polarity protection For details, please refer to p. 608.
- Dielectric strength ..... 50/60 Hz, 500 VAC, for 1 minute (between lead wire conductors and frame)
- Insulation resistance ..... 10 MΩ min. at 500 VDC (between lead wire conductors and frame)
- Sound pressure level (SPL) ..... A-weighted sound pressure level (SPL) at 1 m away from the air inlet.
- Storage temperature ..... -30 to +70˚C (Non-condensing)
- Lead wire ..... Inlet ⊕Red ⊖Black Sensor Yellow Control Brown
  Outlet ⊕Orange ⊖Gray Sensor Purple Control White
- Mass ..... 280 g

Specifications

The models listed below **have a pulse sensor with PWM control.**

Model no.	Rated voltage [V]	Operating voltage range [V]	PWM duty cycle* [%]	Rated current [A]	Rated input [W]	Rated speed [min⁻¹] Inlet	Rated speed [min⁻¹] Outlet	Max. airflow [m³/min]	Max. airflow [CFM]	Max. static pressure [Pa]	Max. static pressure [inchH₂O]	SPL [dB (A)]	Operating temperature [˚C]	Expected life [h]
9CRLB0612P0G001	12	10.8 to 13.2	100	3.6	43.2	19700	18300	2.4	84.8	1500	6.00	75	-20 to +70	100000/60˚C (135000/40˚C)
			20	0.28	3.36	5300	4800	0.64	22.6	110	0.44	43		

PWM frequency is 25 kHz. Models without ratings for 0% PWM duty cycle have zero speed at 0%. When control terminal is open, speed is the same as at 100% duty cycle.

Airflow - Static Pressure Characteristics / PWM Duty - Speed Characteristics Example

9CRLB0612P0G001 With pulse sensor with PWM control

PWM duty cycle

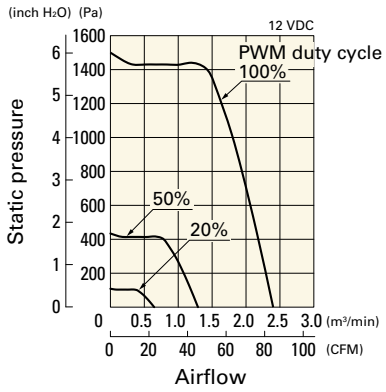

Operating voltage range

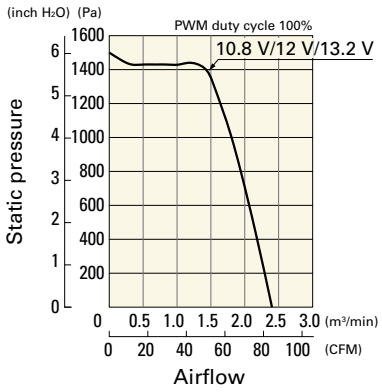

PWM duty - Speed characteristics example

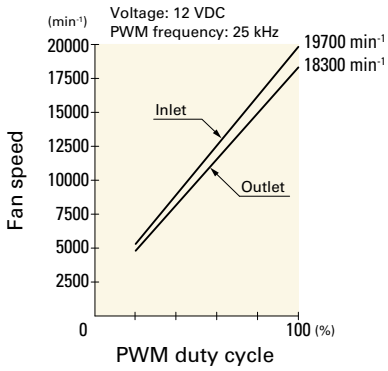

Dimensions (unit: mm)

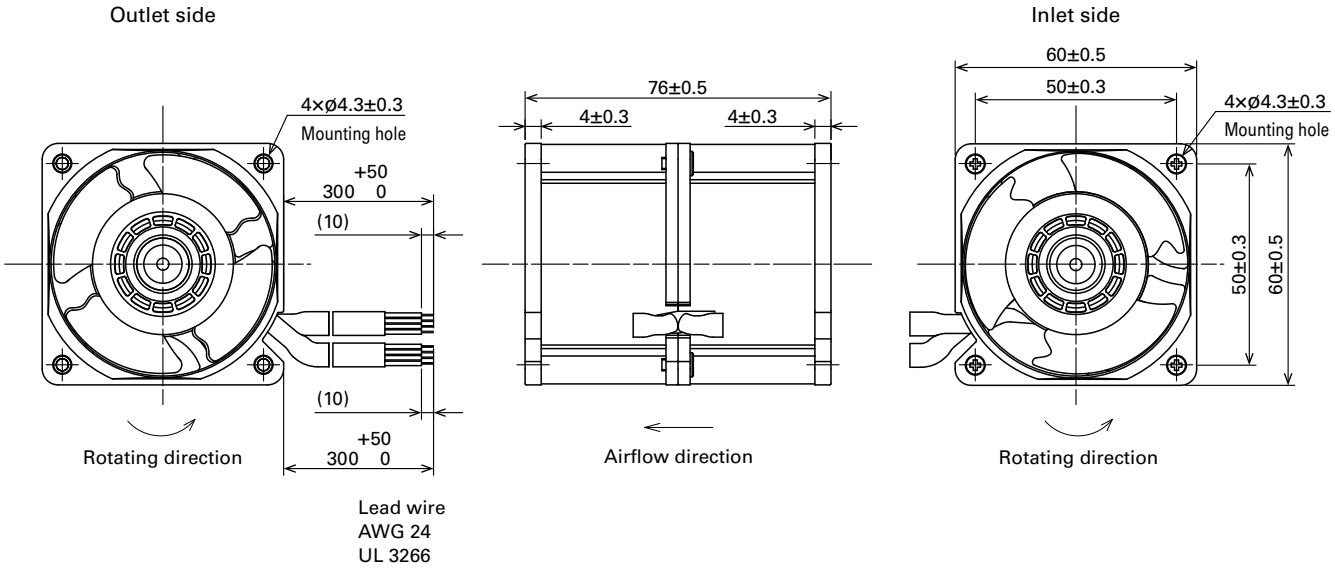

Reference Dimensions of Mounting Holes and Vent Opening (unit: mm)

Inlet side, Outlet side

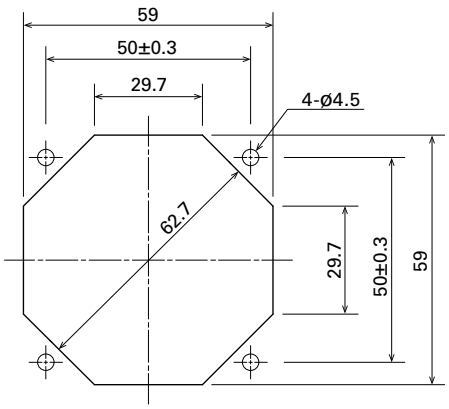

Options

Finger guards page: p. 590

Model no.: 109-139E, 109-139H

Resin filter kits page: p. 598

Model no.: 109-1003F13 (13PPI), 109-1003F20 (20PPI),
109-1003F30 (30PPI), 109-1003F40 (40PPI)

Resin finger guards page: p. 597

Model no.: 109-1003G

60×60×76 mm

San Ace 60L 9CRLA type

General Specifications

- Material ..... Frame: Aluminum (Black coating), Impeller: Plastic (Flammability: UL 94V-1)
- Expected life ..... See the table below. (L10 life: 90% survival rate for continuous operation in free air at 60˚C, rated voltage) Expected life at 40°C is for reference only.
- Motor protection function ..... Locked rotor burnout protection, Reverse polarity protection For details, please refer to p. 608.
- Dielectric strength ..... 50/60 Hz, 500 VAC, for 1 minute (between lead wire conductors and frame)
- Insulation resistance ..... 10 MΩ min. at 500 VDC (between lead wire conductors and frame)
- Sound pressure level (SPL) ..... A-weighted sound pressure level (SPL) at 1 m away from the air inlet.
- Storage temperature ..... -30 to +70˚C (Non-condensing)
- Lead wire ..... Inlet ⊕Red ⊖Black Sensor Yellow Control Brown
  Outlet ⊕Orange ⊖Gray Sensor Purple Control White
- Mass ..... 310 g

Specifications

The models listed below **have a pulse sensor with PWM control.**

Model no.	Rated voltage [V]	Operating voltage range [V]	PWM duty cycle* [%]	Rated current [A]	Rated input [W]	Rated speed [min⁻¹] Inlet	Rated speed [min⁻¹] Outlet	Max. airflow [m³/min]	Max. airflow [CFM]	Max. static pressure [Pa]	Max. static pressure [inchH₂O]	SPL [dB (A)]	Operating temperature [˚C]	Expected life [h]
9CRLA0612P0G001	12	10.8 to 13.2	100	3.0	36.0	16500	17800	2.1	74.1	1400	5.62	70	-20 to +70	100000/60˚C (135000/40˚C)
			20	0.4	4.8	5000	5400	0.64	22.6	128	0.51	43		

PWM frequency is 25 kHz. Models without ratings for 0% PWM duty cycle have zero speed at 0%. When control terminal is open, speed is the same as at 100% duty cycle.

Note: The » mark indicates Short Lead Time Service applicable models. See p. 664 for details.

Airflow - Static Pressure Characteristics / PWM Duty - Speed Characteristics Example

9CRLA0612P0G001 With pulse sensor with PWM control

PWM duty cycle

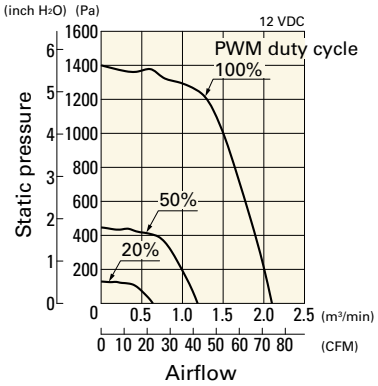

Operating voltage range

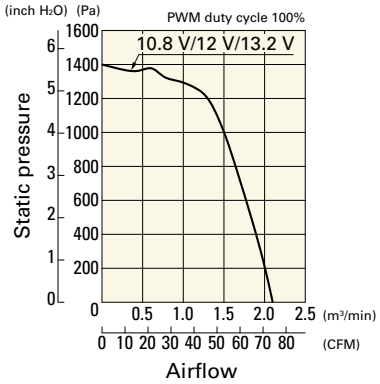

PWM duty - Speed characteristics example

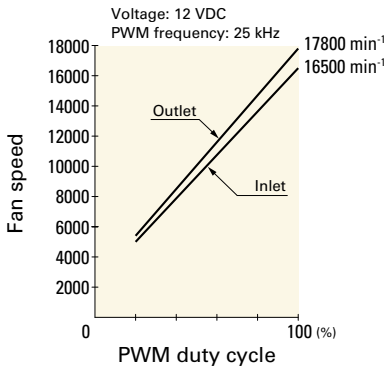

Dimensions (unit: mm)

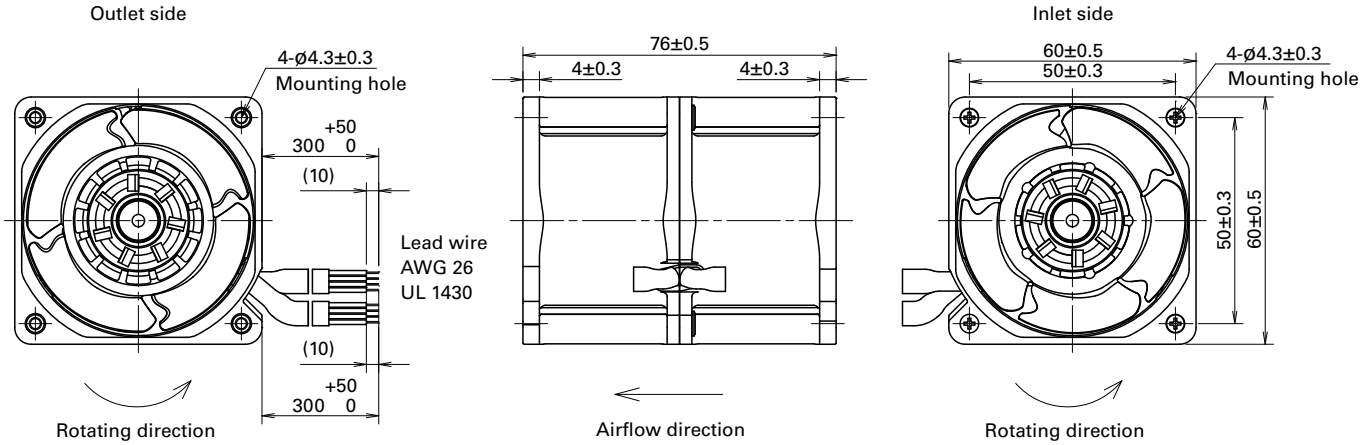

Reference Dimensions of Mounting Holes and Vent Opening (unit: mm)

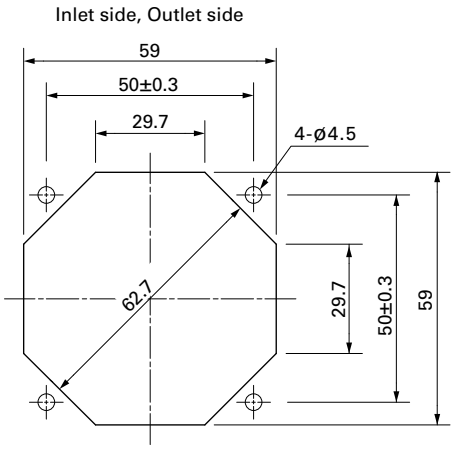

Options

Finger guards page: p. 590

Model no.: 109-139E, 109-139H

Resin filter kits page: p. 598

Model no.: 109-1003F13 (13PPI), 109-1003F20 (20PPI),
109-1003F30 (30PPI), 109-1003F40 (40PPI)

Resin finger guards page: p. 597

Model no.: 109-1003G

80×80×25 mm

San Ace 80L 9LG type

General Specifications

- Material ..... Frame: Aluminum, Impeller: Plastic (Flammability: UL 94V-1)
- Expected life ..... See the table below. (L10 life: 90% survival rate for continuous operation in free air at 60˚C, rated voltage) Expected life at 40°C is for reference only.
- Motor protection function ..... Locked rotor burnout protection, Reverse polarity protection For details, please refer to p. 608.
- Dielectric strength ..... 50/60 Hz, 500 VAC, for 1 minute (between lead wire conductors and frame)
- Insulation resistance ..... 10 MΩ min. at 500 VDC (between lead wire conductors and frame)
- Sound pressure level (SPL) ..... A-weighted sound pressure level (SPL) at 1 m away from the air inlet.
- Storage temperature ..... -30 to +70˚C (Non-condensing)
- Lead wire ..... ⊕Red ⊖Black Sensor Yellow Control Brown (For models without PWM control, there is no speed control wiring.)
- Mass ..... 130 g

Specifications

The models listed below **have a pulse sensor with PWM control.**

Model no.	Rated voltage [V]	Operating voltage range [V]	PWM duty cycle* [%]	Rated current [A]	Rated input [W]	Rated speed [min⁻¹]	Max. airflow [m³/min]	Max. airflow [CFM]	Max. static pressure [Pa]	Max. static pressure [inchH₂O]	SPL [dB (A)]	Operating temperature [˚C]	Expected life [h]
9LG0812P4J001	12	10.8 to 13.2	100	0.6	7.2	7400	2.07	73.0	177	0.71	49	-20 to +70	180000/60˚C (215000/40˚C)
			20	0.06	0.72	1800	0.5	17.6	10.4	0.04	16		
9LG0812P4G001			100	0.3	3.6	5500	1.54	54.3	98	0.39	43		
			25	0.05	0.6	1400	0.39	13.7	6.3	0.02	14		
9LG0812P4H001			100	0.12	1.44	3700	1.03	36.3	44	0.17	31		
			25	0.04	0.48	1100	0.3	10.5	3.9	0.01	13		
9LG0824P4J001	24	21.6 to 26.4	100	0.28	6.72	7400	2.07	73.0	177	0.71	49		
			20	0.05	1.2	2400	0.67	23.6	18.6	0.07	22		
9LG0824P4G001			100	0.14	3.36	5500	1.54	54.3	98	0.39	43		
			20	0.02	0.48	1200	0.33	11.6	4.6	0.01	13		
9LG0824P4H001			100	0.05	1.2	3700	1.03	36.3	44	0.17	31		
			30	0.02	0.48	1100	0.3	10.5	3.9	0.01	13		

PWM frequency is 25 kHz. Models without ratings for 0% PWM duty cycle have zero speed at 0%. When control terminal is open, speed is the same as at 100% duty cycle.

The models listed below **have a pulse sensor.**

Model no.	Rated voltage [V]	Operating voltage range [V]	Rated current [A]	Rated input [W]	Rated speed [min⁻¹]	Max. airflow [m³/min]	Max. airflow [CFM]	Max. static pressure [Pa]	Max. static pressure [inchH₂O]	SPL [dB (A)]	Operating temperature [˚C]	Expected life [h]
9LG0812S4001	12	6 to 13.2	0.17	2.04	4200	1.17	41.3	56	0.22	35	-20 to +70	180000/60˚C (215000/40˚C)
9LG0812F4001			0.1	1.2	3300	0.92	32.5	35	0.14	29		
9LG0812M4001			0.08	0.96	2900	0.8	28.3	27	0.11	25		
9LG0812L4001		8 to 13.2	0.06	0.72	2300	0.64	22.6	17	0.068	22		
9LG0824S4001	24	12 to 26.4	0.07	1.68	4200	1.17	41.3	56	0.22	35		
9LG0824F4001			0.045	1.08	3300	0.92	32.5	35	0.14	29		
9LG0824M4001			0.04	0.96	2900	0.8	28.3	27	0.11	25		
9LG0824L4001		14 to 26.4	0.03	0.72	2300	0.64	22.6	17	0.068	22		

Note 1: Sensor and control options are available for selection. Refer to the table on p. 643.
Note 2: The » mark indicates Short LeadTime Service applicable models. See p. 664 for details.

Airflow - Static Pressure Characteristics / PWM Duty - Speed Characteristics Example

9LG0812P4J001 With pulse sensor with PWM control

PWM duty cycle

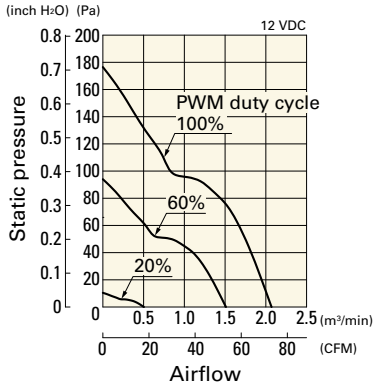

Operating voltage range

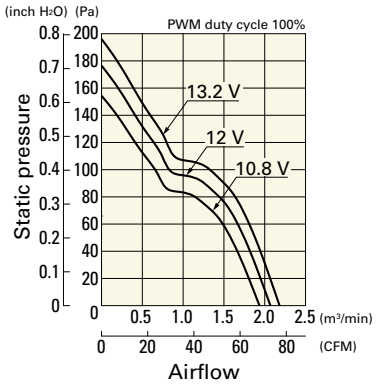

PWM duty - Speed characteristics example

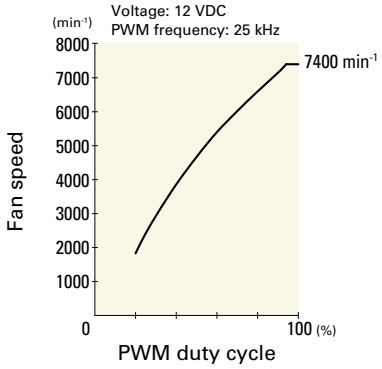

9LG0812P4G001 With pulse sensor with PWM control

PWM duty cycle

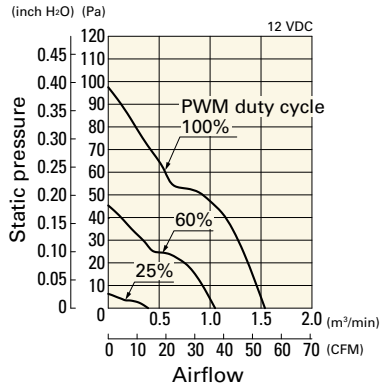

Operating voltage range

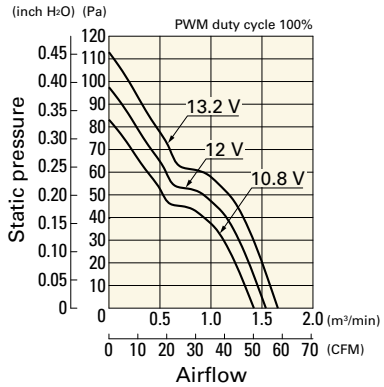

PWM duty - Speed characteristics example

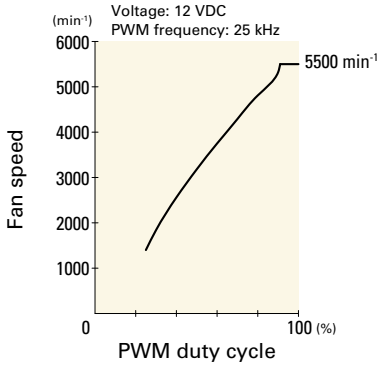

9LG0812P4H001 With pulse sensor with PWM control

PWM duty cycle

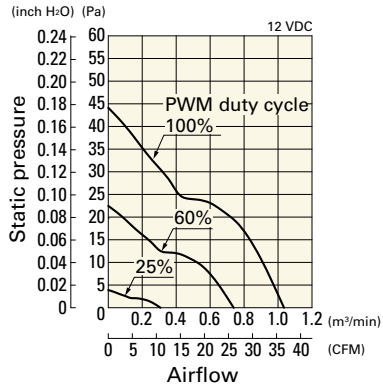

Operating voltage range

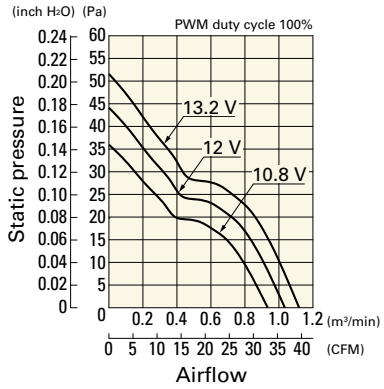

PWM duty - Speed characteristics example

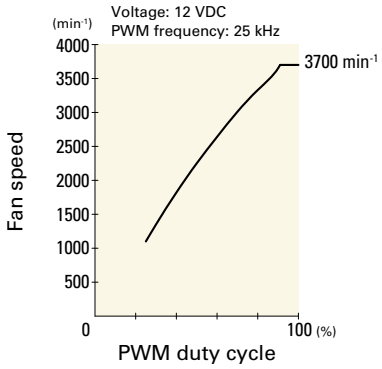

9LG0824P4J001 With pulse sensor with PWM control

PWM duty cycle

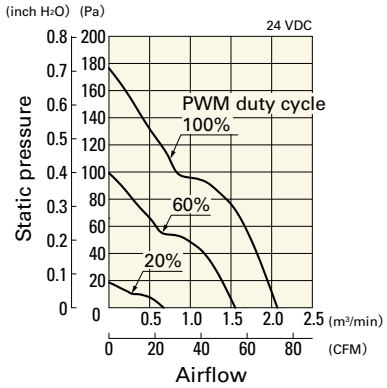

Operating voltage range

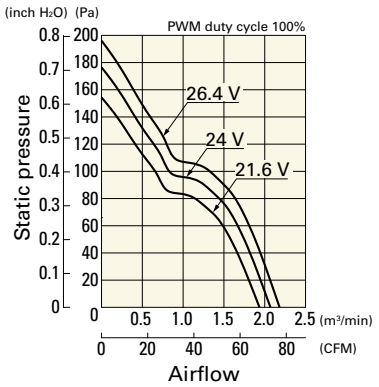

PWM duty - Speed characteristics example

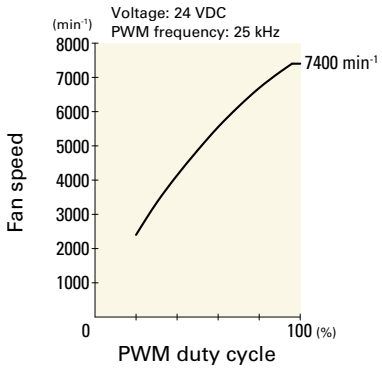

Airflow - Static Pressure Characteristics / PWM Duty - Speed Characteristics Example

9LG0824P4G001 With pulse sensor with PWM control

PWM duty cycle

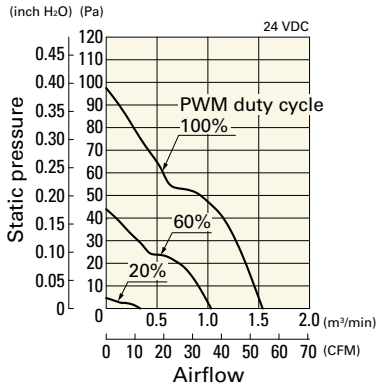

Operating voltage range

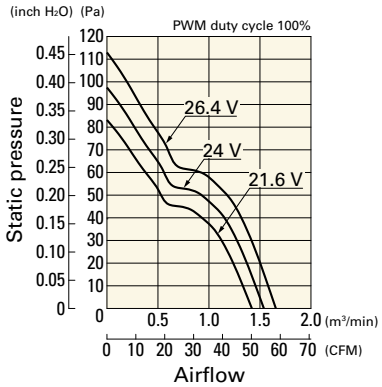

PWM duty - Speed characteristics example

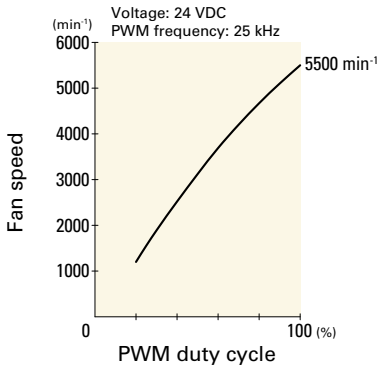

9LG0824P4H001 With pulse sensor with PWM control

PWM duty cycle

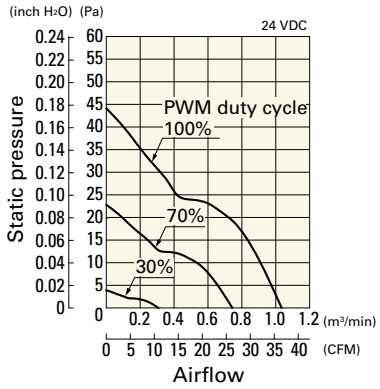

Operating voltage range

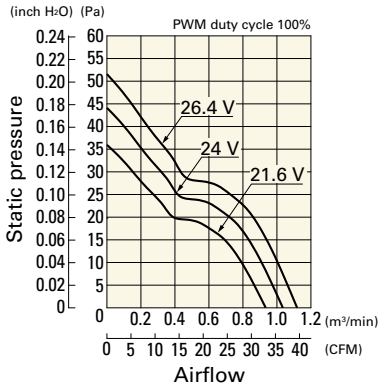

PWM duty - Speed characteristics example

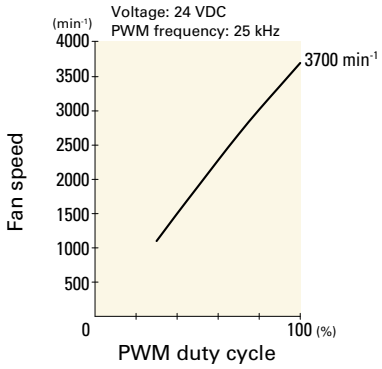

Airflow - Static Pressure Characteristics

9LG0812S4001 With pulse sensor

Operating voltage range

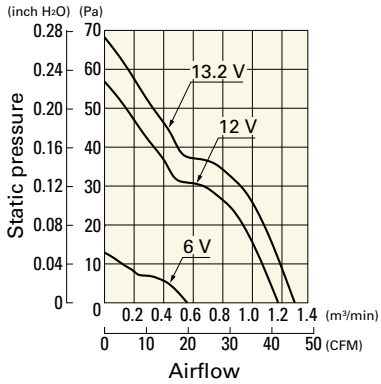

9LG0812F4001 With pulse sensor

Operating voltage range

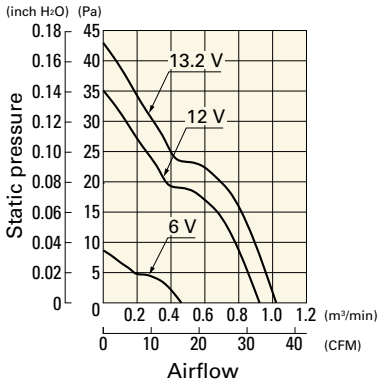

9LG0812M4001 With pulse sensor

Operating voltage range

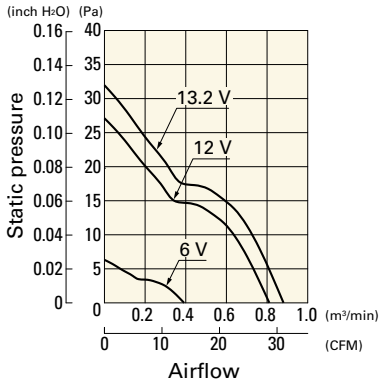

Airflow - Static Pressure Characteristics

9LG0812L4001 With pulse sensor

Operating voltage range

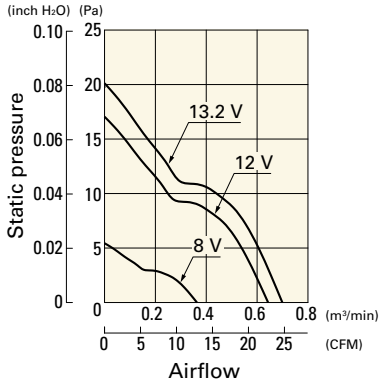

9LG0824S4001 With pulse sensor

Operating voltage range

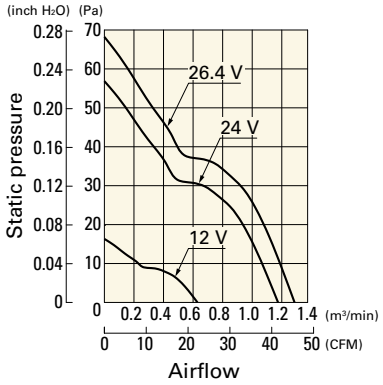

9LG0824F4001 With pulse sensor

Operating voltage range

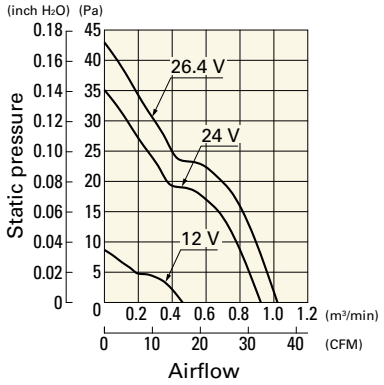

9LG0824M4001 With pulse sensor

Operating voltage range

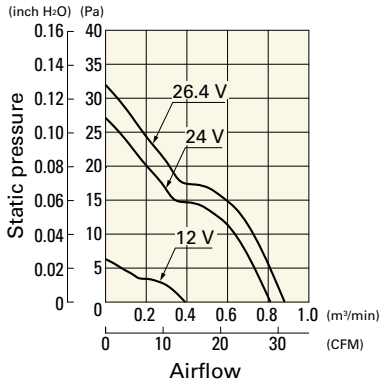

9LG0824L4001 With pulse sensor

Operating voltage range

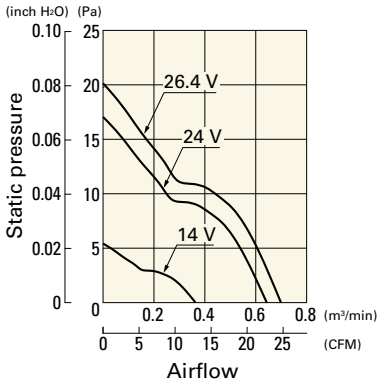

Dimensions (unit: mm) (With pulse sensor with PWM control)

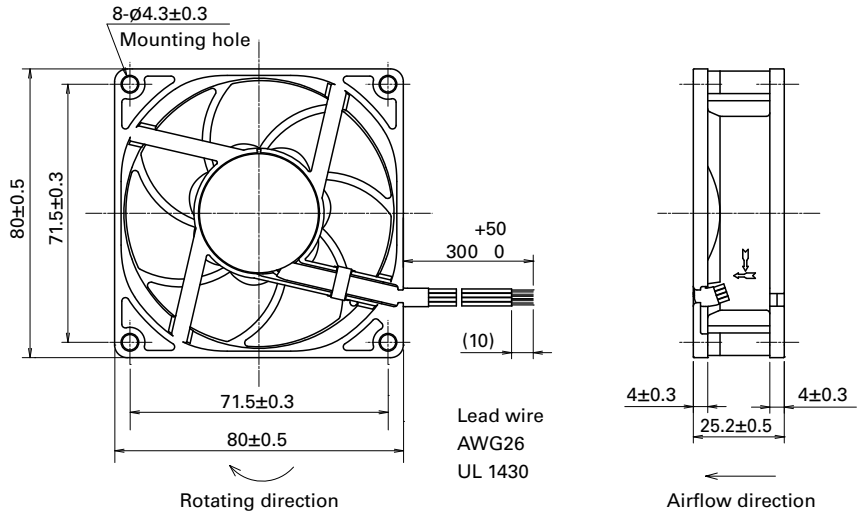

Reference Dimensions of Mounting Holes and Vent Opening (unit: mm)

Inlet side, Outlet side

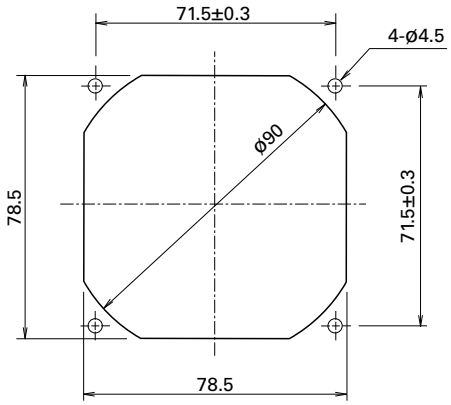

Options

Finger guards page: p. 590

Model no.: 109-049E, 109-049H

Resin filter kits page: p. 598

Model no.: 109-1002F13 (13PPI), 109-1002F20 (20PPI),
109-1002F30 (30PPI), 109-1002F40 (40PPI)

Resin finger guards page: p. 597

Model no.: 109-1002G

80×80×80 mm

San Ace 80L 9CRL type

General Specifications

- Material ..... Frame: Aluminum, Impeller: Plastic (Flammability: UL 94V-1)
- Expected life ..... See the table below. (L10 life: 90% survival rate for continuous operation in free air at 60˚C, rated voltage) Expected life at 40°C is for reference only.
- Motor protection function ..... Locked rotor burnout protection, Reverse polarity protection For details, please refer to p. 608.
- Dielectric strength ..... 50/60 Hz, 500 VAC, for 1 minute (between lead wire conductors and frame)
- Insulation resistance ..... 10 MΩ min. at 500 VDC (between lead wire conductors and frame)
- Sound pressure level (SPL) ..... A-weighted sound pressure level (SPL) at 1 m away from the air inlet.
- Storage temperature ..... -30 to +70˚C (Non-condensing)
- Lead wire ..... Inlet ⊕Red ⊖Black Sensor Yellow Control Brown
  Outlet ⊕Orange ⊖Gray Sensor Purple Control White
- Mass ..... 490 g

Specifications

The models listed below **have a pulse sensor with PWM control.**

Model no.	Rated voltage [V]	Operating voltage range [V]	PWM duty cycle* [%]	Rated current [A]	Rated input [W]	Rated speed [min⁻¹] Inlet	Rated speed [min⁻¹] Outlet	Max. airflow [m³/min]	Max. airflow [CFM]	Max. static pressure [Pa]	Max. static pressure [inchH₂O]	SPL [dB (A)]	Operating temperature [˚C]	Expected life [h]
9CRL0812P8G001	12	10.8 to 13.2	100	5.3	63.6	12000	11300	4.5	158.9	1150	4.62	76	-20 to +70	130000/60˚C (165000/40˚C)
			0	0.2	2.4	2000	1900	0.74	26.1	31.9	0.13	30		

PWM frequency is 25 kHz. Models without ratings for 0% PWM duty cycle have zero speed at 0%. When control terminal is open, speed is the same as at 100% duty cycle.

Note: The » mark indicates Short Lead Time Service applicable models. See p. 664 for details.

Airflow - Static Pressure Characteristics / PWM Duty - Speed Characteristics Example

9CRL0812P8G001 With pulse sensor with PWM control

PWM duty cycle

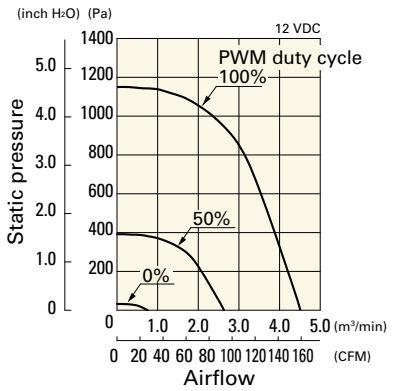

Operating voltage range

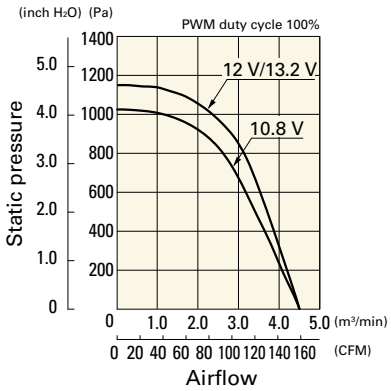

PWM duty - Speed characteristics example

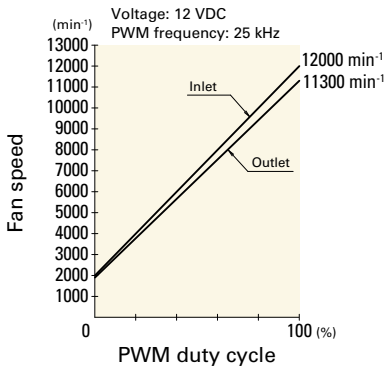

Dimensions (unit: mm)

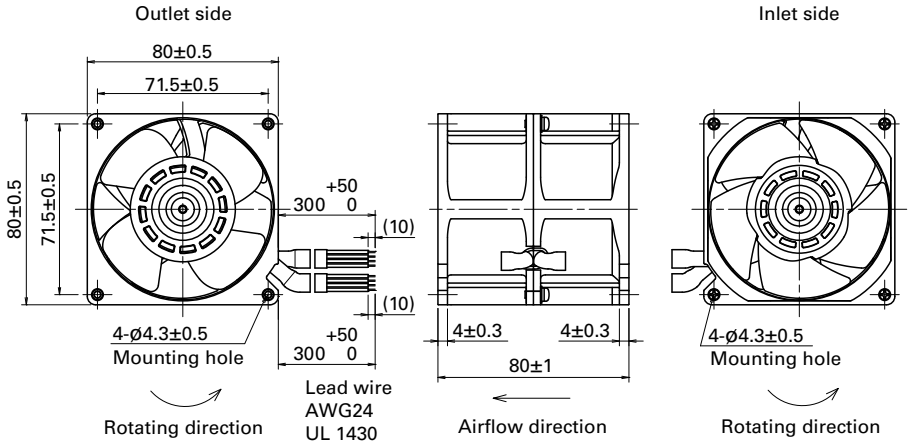

Reference Dimensions of Mounting Holes and Vent Opening (unit: mm)

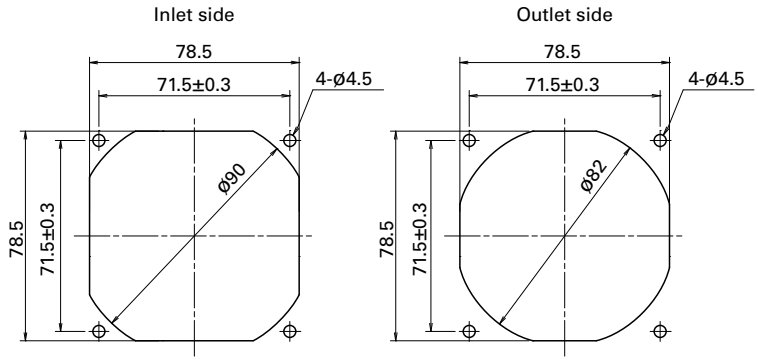

Options

Finger guards page: p. 590

Model no.: 109-049E, 109-049H

Resin filter kits page: p. 598

Model no.: 109-1002F13 (13PPI), 109-1002F20 (20PPI),
109-1002F30 (30PPI), 109-1002F40 (40PPI)

Resin finger guards page: p. 597

Model no.: 109-1002G

92×92×25 mm

San Ace 92L 9LG type

General Specifications

- Material ..... Frame: Aluminum, Impeller: Plastic (Flammability: UL 94V-1)
- Expected life ..... See the table below. (L10 life: 90% survival rate for continuous operation in free air at 60˚C, rated voltage) Expected life at 40°C is for reference only.
- Motor protection function ..... Locked rotor burnout protection, Reverse polarity protection For details, please refer to p. 608.
- Dielectric strength ..... 50/60 Hz, 500 VAC, for 1 minute (between lead wire conductors and frame)
- Insulation resistance ..... 10 MΩ min. at 500 VDC (between lead wire conductors and frame)
- Sound pressure level (SPL) ..... A-weighted sound pressure level (SPL) at 1 m away from the air inlet.
- Storage temperature ..... -30 to +70˚C (Non-condensing)
- Lead wire ..... ⊕Red ⊖Black Sensor Yellow Control Brown (For models without PWM control, there is no speed control wiring.)
- Mass ..... 150 g

Specifications

The models listed below **have a pulse sensor with PWM control.**

Model no.	Rated voltage [V]	Operating voltage range [V]	PWM duty cycle* [%]	Rated current [A]	Rated input [W]	Rated speed [min⁻¹]	Max. airflow [m³/min]	Max. airflow [CFM]	Max. static pressure [Pa]	Max. static pressure [inchH₂O]	SPL [dB (A)]	Operating temperature [˚C]	Expected life [h]
9LG0912P4J001	12	10.8 to 13.2	100	0.42	5.04	5000	2.2	77.7	105	0.42	44	-20 to +70	180000/60˚C (215000/40˚C)
9LG0912P4G001			100	0.3	3.6	4400	1.93	68.2	81	0.33	40		
9LG0912P4S001			100	0.22	2.64	3850	1.69	59.7	62.1	0.25	37		
9LG0912P4H001			100	0.15	1.8	3150	1.38	48.7	41.6	0.17	32		
9LG0924P4J001	24	21.6 to 26.4	100	0.21	5.04	5000	2.2	77.7	105	0.42	44		
9LG0924P4G001			100	0.15	3.6	4400	1.93	68.2	81	0.33	40		
9LG0924P4S001			100	0.11	2.64	3850	1.69	59.7	62.1	0.25	37		
9LG0924P4H001			100	0.07	1.68	3150	1.38	48.7	41.6	0.17	32		

PWM frequency is 25 kHz. Models without ratings for 0% PWM duty cycle have zero speed at 0%. When control terminal is open, speed is the same as at 100% duty cycle.

The models listed below **have a pulse sensor.**

Model no.	Rated voltage [V]	Operating voltage range [V]	Rated current [A]	Rated input [W]	Rated speed [min⁻¹]	Max. airflow [m³/min]	Max. airflow [CFM]	Max. static pressure [Pa]	Max. static pressure [inchH₂O]	SPL [dB (A)]	Operating temperature [˚C]	Expected life [h]
9LG0912F4001	12	10.2 to 13.8	0.1	1.2	2800	1.22	43.1	32.8	0.13	29	-20 to +70	180000/60˚C (215000/40˚C)
9LG0912M4001			0.08	0.96	2400	1.05	37.1	24.1	0.097	24		
9LG0912L4001			0.07	0.84	2000	0.87	30.7	16.7	0.067	19		
9LG0924F4001	24	20.4 to 27.6	0.05	1.2	2800	1.22	43.1	32.8	0.13	29		
9LG0924M4001			0.04	0.96	2400	1.05	37.1	24.1	0.097	24		
9LG0924L4001			0.03	0.72	2000	0.87	30.7	16.7	0.067	19		
9LG0948H4001	48	40.8 to 55.2	0.04	1.92	3150	1.38	48.7	41.6	0.17	32		

Note 1: Sensor and control options are available for selection. Refer to the table on pp. 643 to 644.
Note 2: The mark indicates Short LeadTime Service applicable models. See p. 664 for details.

Airflow - Static Pressure Characteristics / PWM Duty - Speed Characteristics Example

9LG0912P4J001 With pulse sensor with PWM control

PWM duty cycle

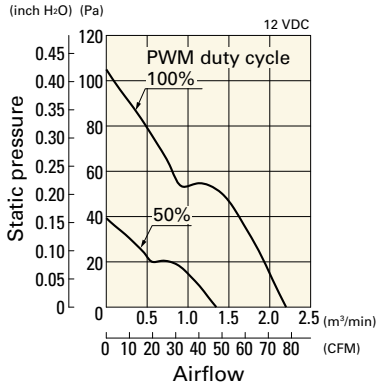

Operating voltage range

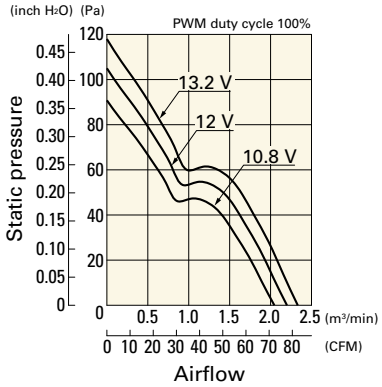

PWM duty - Speed characteristics example

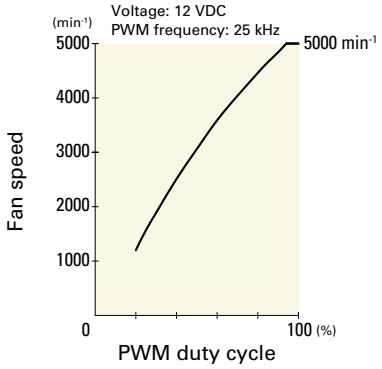

9LG0912P4G001 With pulse sensor with PWM control

PWM duty cycle

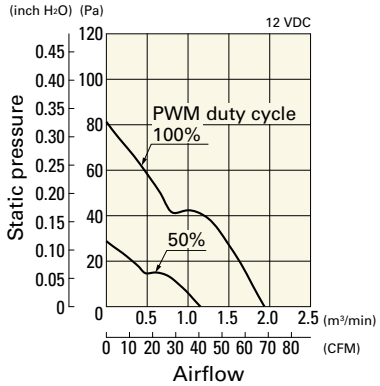

Operating voltage range

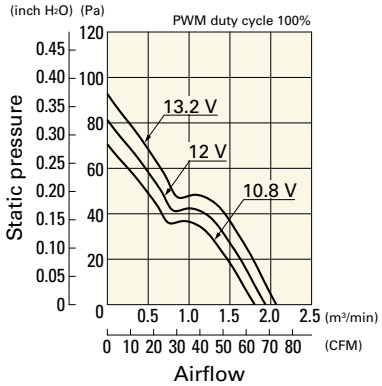

PWM duty - Speed characteristics example

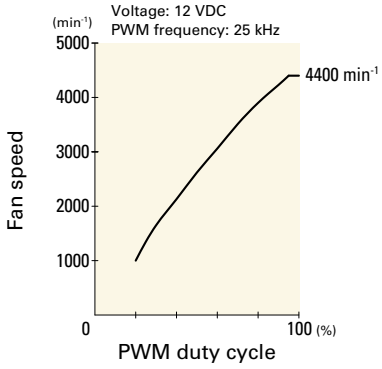

9LG0912P4S001 With pulse sensor with PWM control

PWM duty cycle

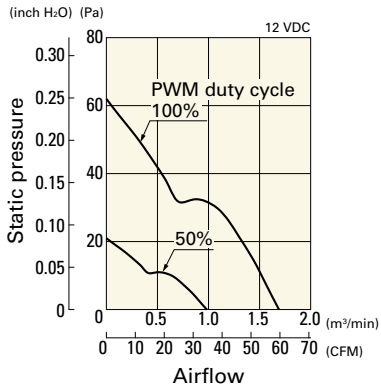

Operating voltage range

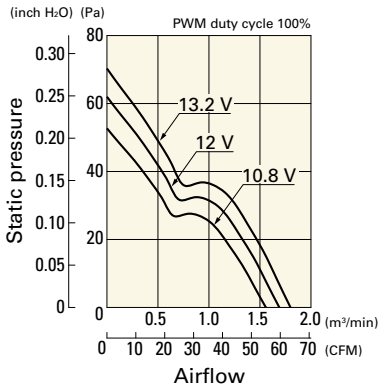

PWM duty - Speed characteristics example

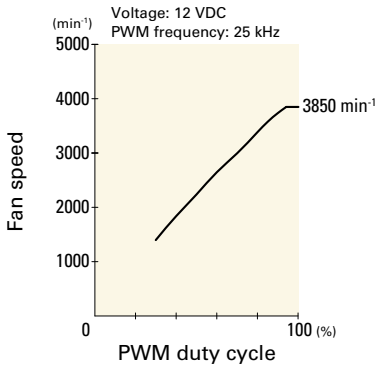

9LG0912P4H001 With pulse sensor with PWM control

PWM duty cycle

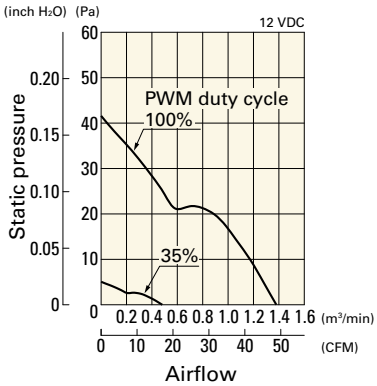

Operating voltage range

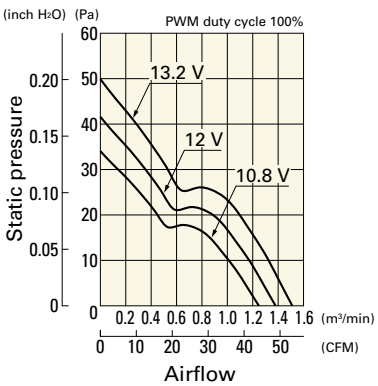

PWM duty - Speed characteristics example

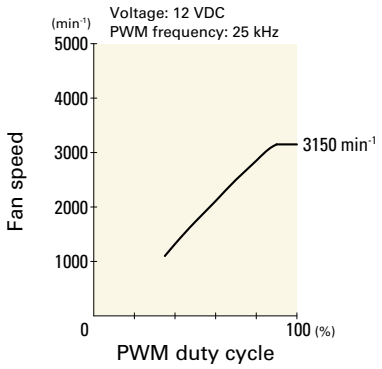

Airflow - Static Pressure Characteristics / PWM Duty - Speed Characteristics Example

9LG0924P4J001 With pulse sensor with PWM control

PWM duty cycle

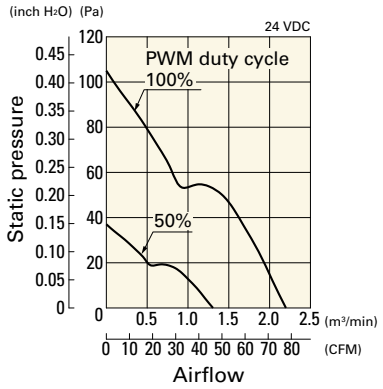

Operating voltage range

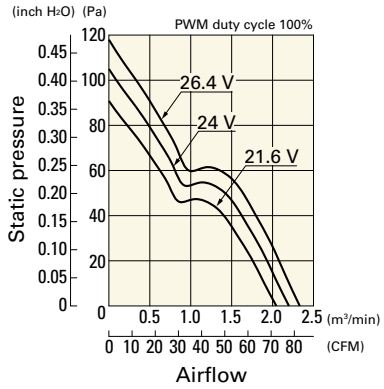

PWM duty - Speed characteristics example

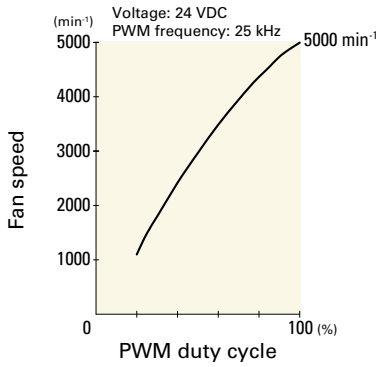

9LG0924P4G001 With pulse sensor with PWM control

PWM duty cycle

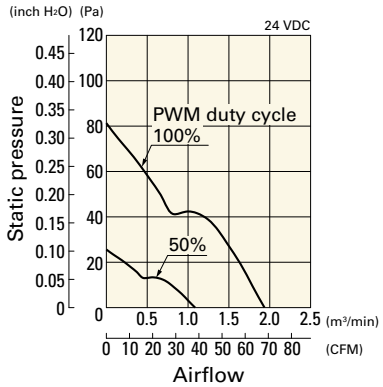

Operating voltage range

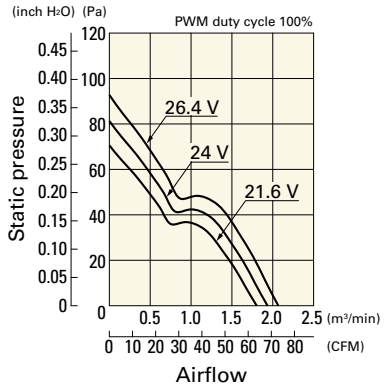

PWM duty - Speed characteristics example

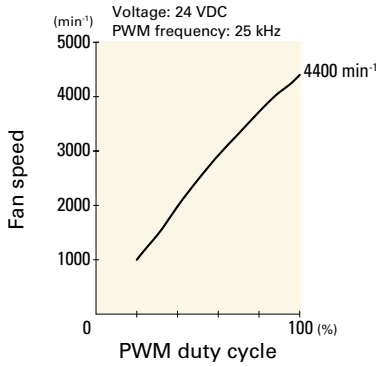

9LG0924P4S001 With pulse sensor with PWM control

PWM duty cycle

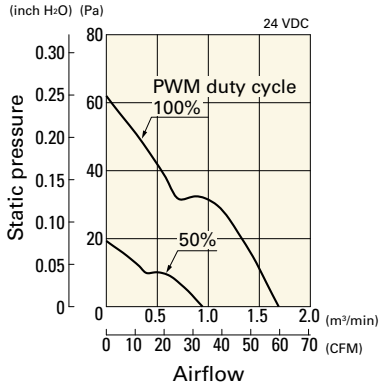

Operating voltage range

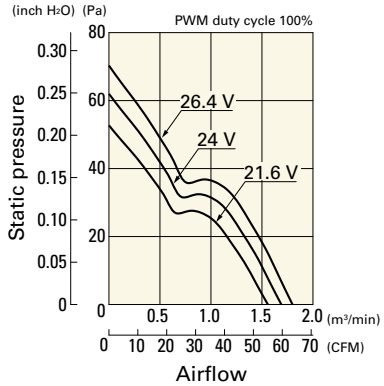

PWM duty - Speed characteristics example

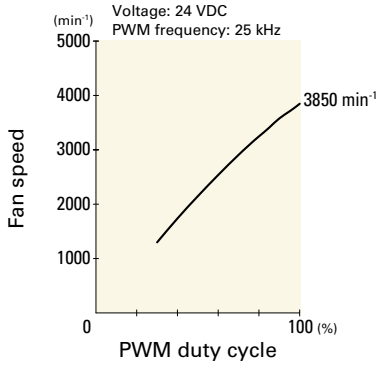

9LG0924P4H001 With pulse sensor with PWM control

PWM duty cycle

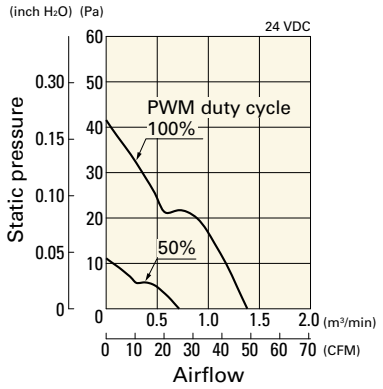

Operating voltage range

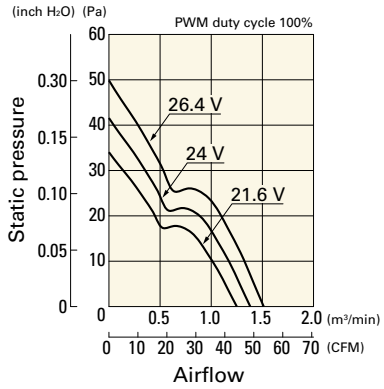

PWM duty - Speed characteristics example

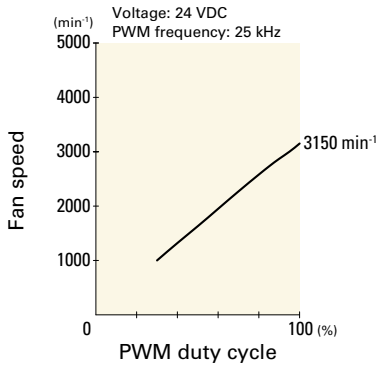

Airflow - Static Pressure Characteristics

9LG0912F4001 With pulse sensor

Operating voltage range

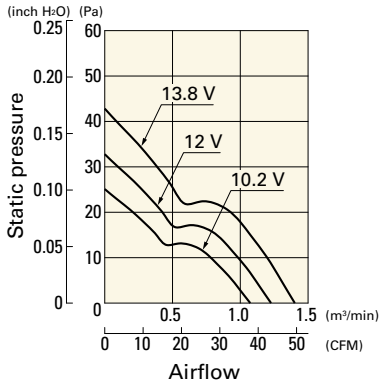

9LG0912M4001 With pulse sensor

Operating voltage range

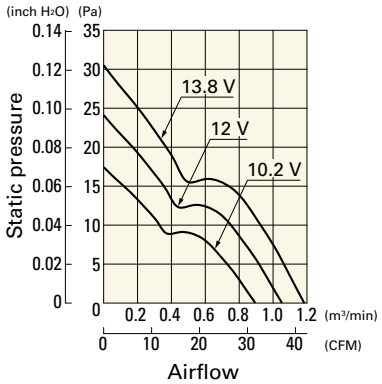

9LG0912L4001 With pulse sensor

Operating voltage range

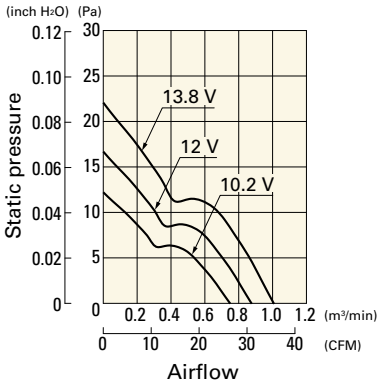

9LG0924F4001 With pulse sensor

Operating voltage range

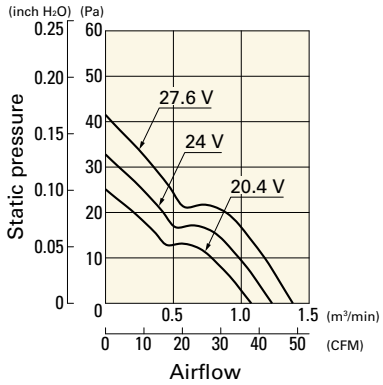

9LG0924M4001 With pulse sensor

Operating voltage range

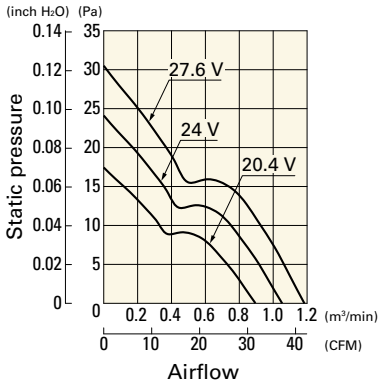

9LG0924L4001 With pulse sensor

Operating voltage range

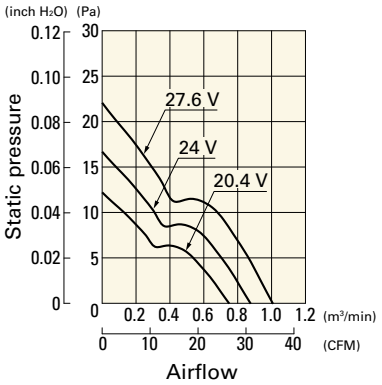

9LG0948H4001 With pulse sensor

Operating voltage range

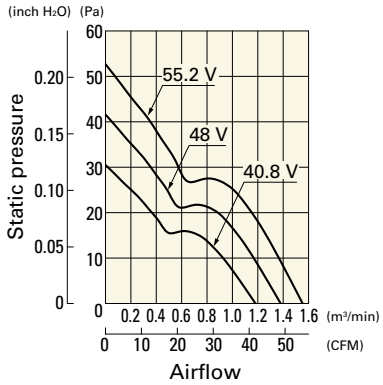

Dimensions (unit: mm) (With pulse sensor with PWM control)

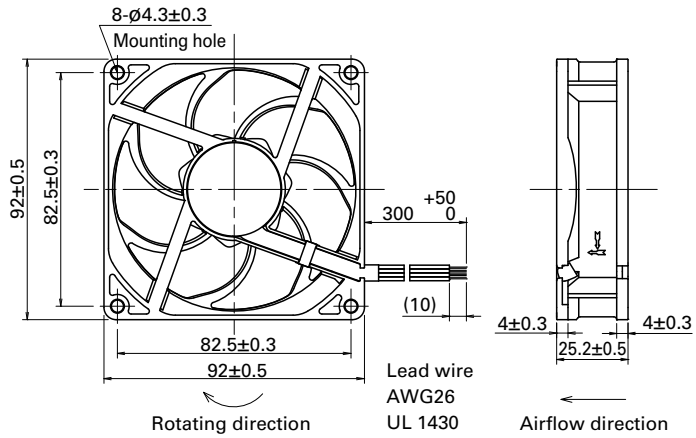

Reference Dimensions of Mounting Holes and Vent Opening (unit: mm)

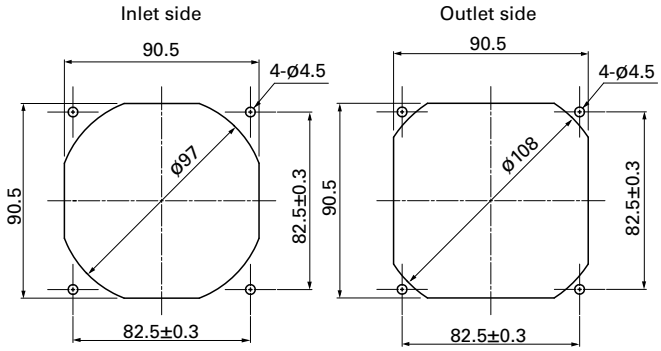

Options

Finger guards page: p. 591

Model no.: 109-099E, 109-099H

Resin filter kits page: p. 598

Model no.: 109-1001F13 (13PPI), 109-1001F20 (20PPI),
109-1001F30 (30PPI), 109-1001F40 (40PPI)

Resin finger guards page: p. 597

Model no.: 109-1001G

92×92×38 mm

San Ace 92L 9LG type

General Specifications

- Material ..... Frame: Aluminum, Impeller: Plastic (Flammability: UL 94V-1)
- Expected life ..... See the table below. (L10 life: 90% survival rate for continuous operation in free air at 60˚C, rated voltage) Expected life at 40°C is for reference only.
- Motor protection function ..... Locked rotor burnout protection, Reverse polarity protection For details, please refer to p. 608.
- Dielectric strength ..... 50/60 Hz, 500 VAC, for 1 minute (between lead wire conductors and frame)
- Insulation resistance ..... 10 MΩ min. at 500 VDC (between lead wire conductors and frame)
- Sound pressure level (SPL) ..... A-weighted sound pressure level (SPL) at 1 m away from the air inlet.
- Storage temperature ..... -30 to +70˚C (Non-condensing)
- Lead wire ..... ⊕Red ⊖Black Sensor Yellow Control Brown
- Mass ..... 270 g

Specifications

The models listed below **have a pulse sensor with PWM control.**

Model no.	Rated voltage [V]	Operating voltage range [V]	PWM duty cycle* [%]	Rated current [A]	Rated input [W]	Rated speed [min⁻¹]	Max. airflow [m³/min]	Max. airflow [CFM]	Max. static pressure [Pa]	Max. static pressure [inchH₂O]	SPL [dB (A)]	Operating temperature [˚C]	Expected life [h]
9LG0912P1H001	12	10.2 to 13.8	100	2.0	24.0	9000	3.7	130.6	430	1.72	61	-20 to +70	180000/60˚C (215000/40˚C)
			20	0.18	2.16	2700	1.11	39.1	38.7	0.15	30		
9LG0912P1F001			100	1.0	12.0	7000	2.9	102.4	263	1.05	55		
			20	0.11	1.32	2000	0.83	29.3	21.5	0.08	22		
9LG0924P1H001	24	20.4 to 27.6	100	0.9	21.6	9000	3.7	130.6	430	1.72	61		
			20	0.08	1.92	2700	1.11	39.1	38.7	0.15	30		
9LG0924P1F001			100	0.5	12.0	7000	2.9	102.4	263	1.05	55		
			20	0.06	1.44	2000	0.83	29.3	21.5	0.08	22		

PWM frequency is 25 kHz. Models without ratings for 0% PWM duty cycle have zero speed at 0%. When control terminal is open, speed is the same as at 100% duty cycle.

Note 1: Sensor and control options are available for selection. Refer to the table on pp. 643 to 644.
Note 2: The » mark indicates Short LeadTime Service applicable models. See p. 664 for details.

Airflow - Static Pressure Characteristics / PWM Duty - Speed Characteristics Example

9LG0912P1H001 With pulse sensor with PWM control

PWM duty cycle

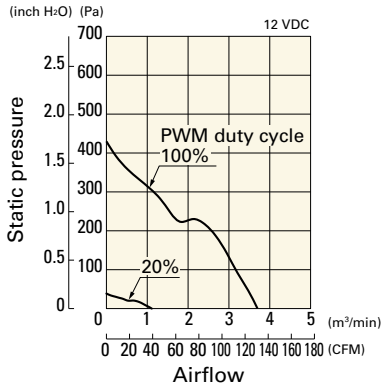

Operating voltage range

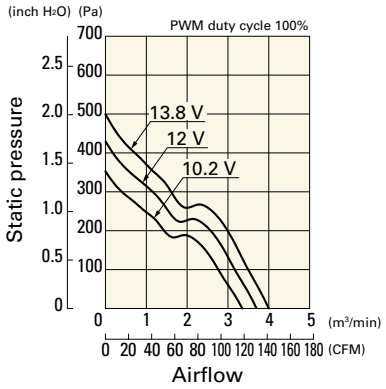

PWM duty - Speed characteristics example

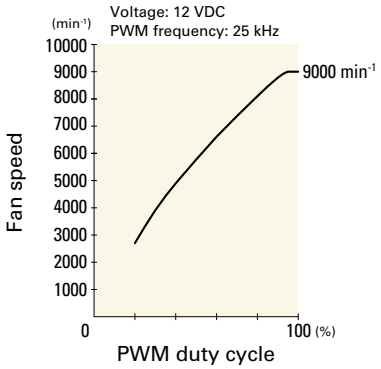

Airflow - Static Pressure Characteristics / PWM Duty - Speed Characteristics Example

9LG0912P1F001 With pulse sensor with PWM control

PWM duty cycle

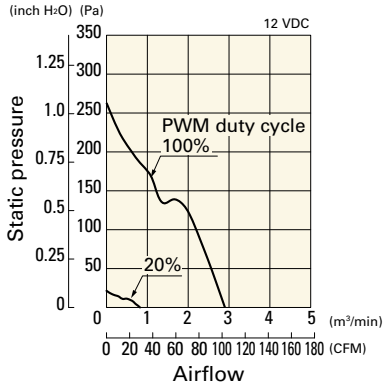

Operating voltage range

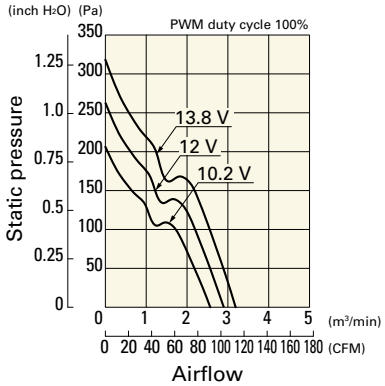

PWM duty - Speed characteristics example

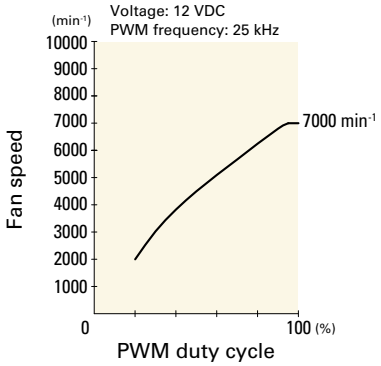

9LG0924P1H001 With pulse sensor with PWM control

PWM duty cycle

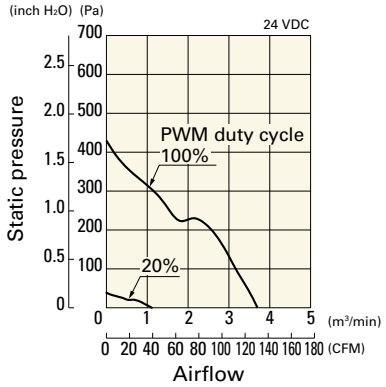

Operating voltage range

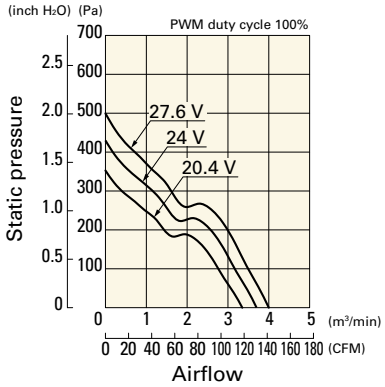

PWM duty - Speed characteristics example

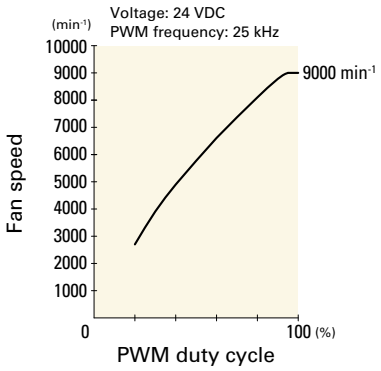

9LG0924P1F001 With pulse sensor with PWM control

PWM duty cycle

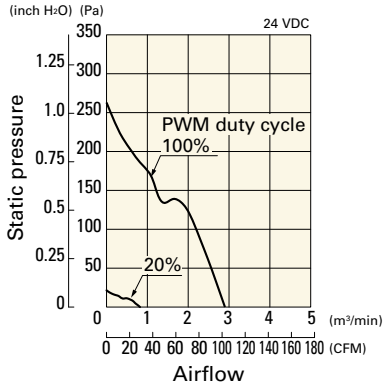

Operating voltage range

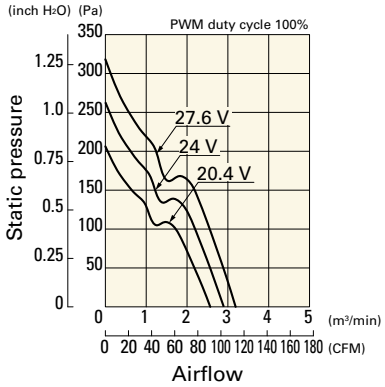

PWM duty - Speed characteristics example

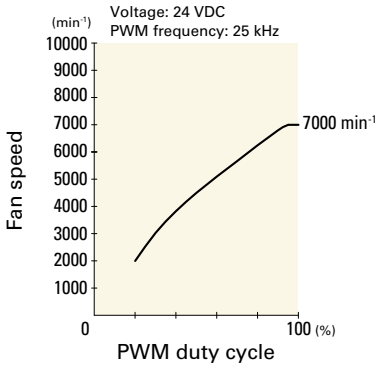

Dimensions (unit: mm)

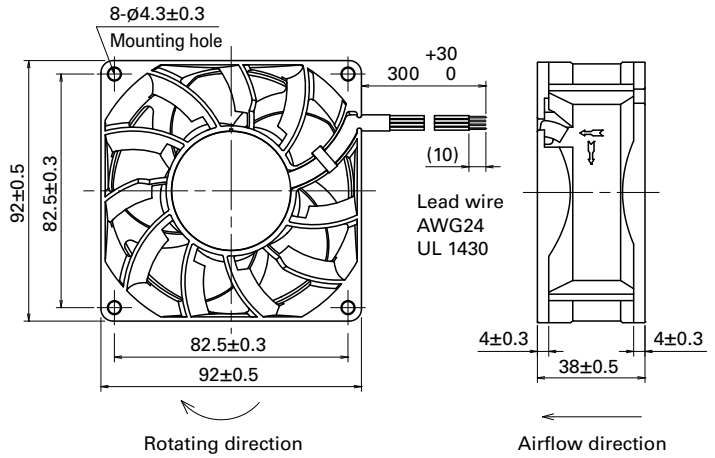

Reference Dimensions of Mounting Holes and Vent Opening (unit: mm)

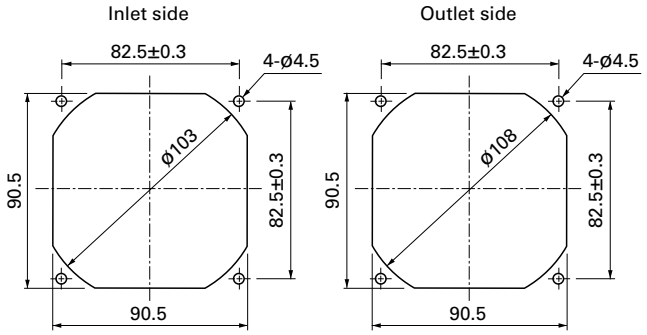

Options

Finger guards page: p. 591

Model no.: 109-099E, 109-099H

Resin filter kits page: p. 598

Model no.: 109-1001F13 (13PPI), 109-1001F20 (20PPI),
109-1001F30 (30PPI), 109-1001F40 (40PPI)

Resin finger guards page: p. 597

Model no.: 109-1001G

120×120×38 mm

San Ace 120L 9LG type

General Specifications

- Material ..... Frame: Aluminum, Impeller: Plastic (Flammability: UL 94V-1)
- Expected life ..... See the table below. (L10 life: 90% survival rate for continuous operation in free air at 60˚C, rated voltage) Expected life at 40°C is for reference only.
- Motor protection function ..... Locked rotor burnout protection, Reverse polarity protection For details, please refer to p. 608.
- Dielectric strength ..... 50/60 Hz, 500 VAC, for 1 minute (between lead wire conductors and frame)
- Insulation resistance ..... 10 MΩ min. at 500 VDC (between lead wire conductors and frame)
- Sound pressure level (SPL) ..... A-weighted sound pressure level (SPL) at 1 m away from the air inlet.
- Storage temperature ..... -30 to +70˚C (Non-condensing)
- Lead wire ..... ⊕Red ⊖Black Sensor Yellow Control Brown (For models without PWM control, there is no speed control wiring.)
- Mass ..... 420 g

Specifications

The models listed below **have a pulse sensor with PWM control.**

Model no.	Rated voltage [V]	Operating voltage range [V]	PWM duty cycle* [%]	Rated current [A]	Rated input [W]	Rated speed [min⁻¹]	Max. airflow [m³/min]	Max. airflow [CFM]	Max. static pressure [Pa]	Max. static pressure [inchH₂O]	SPL [dB (A)]	Operating temperature [˚C]	Expected life [h]
9LG1212P1G001	12	8.0 to 13.8	100	3.2	38.4	6550	7.0	247.1	370	1.48	62	-20 to +70	180000/60˚C (215000/40˚C)
			20	0.24	2.88	2000	2.13	75.2	34.4	0.13	36		
9LG1212P1S001			100	2.2	26.4	5600	6.0	211.8	270	1.08	58		
			20	0.24	2.88	2000	2.13	75.2	34.4	0.13	36		
9LG1212P1H001			100	1.4	16.8	4700	5.0	176.5	190	0.76	54		
			20	0.24	2.88	2000	2.13	75.2	34.4	0.13	36		
9LG1224P1G001	24	15 to 30	100	1.6	38.4	6550	7.0	247.1	370	1.48	62		
			20	0.12	2.88	2000	2.13	75.2	34.4	0.13	36		
9LG1224P1S001			100	1.1	26.4	5600	6.0	211.8	270	1.08	58		
			20	0.12	2.88	2000	2.13	75.2	34.4	0.13	36		
9LG1224P1H001			100	0.7	16.8	4700	5.0	176.5	190	0.76	54		
			20	0.12	2.88	2000	2.13	75.2	34.4	0.13	36		
9LG1248P1G001	48	36 to 60	100	0.8	38.4	6550	7.0	247.1	370	1.48	62		
			20	0.08	3.84	2000	2.13	75.2	34.4	0.13	36		
9LG1248P1S001			100	0.55	26.4	5600	6.0	211.8	270	1.08	58		
			20	0.08	3.84	2000	2.13	75.2	34.4	0.13	36		
9LG1248P1H001			100	0.35	16.8	4700	5.0	176.5	190	0.76	54		
			20	0.08	3.84	2000	2.13	75.2	34.4	0.13	36		

PWM frequency is 25 kHz. Models without ratings for 0% PWM duty cycle have zero speed at 0%. When control terminal is open, speed is the same as at 100% duty cycle.

The models listed below **have a pulse sensor.**

Model no.	Rated voltage [V]	Operating voltage range [V]	Rated current [A]	Rated input [W]	Rated speed [min⁻¹]	Max. airflow [m³/min]	Max. airflow [CFM]	Max. static pressure [Pa]	Max. static pressure [inchH₂O]	SPL [dB (A)]	Operating temperature [˚C]	Expected life [h]
9LG1212F1001	12	8 to 13.8	0.39	4.68	2800	3	106	67.6	0.27	39	-20 to +70	180000/60˚C (215000/40˚C)
9LG1212M1001			0.22	2.64	2100	2.2	77.7	37.9	0.15	33		
9LG1224A1001	24	15 to 30	0.37	8.88	3700	3.9	137.8	117.8	0.47	48		
9LG1224F1001			0.19	4.56	2800	3	106	67.6	0.27	39		
9LG1224M1001			0.11	2.64	2100	2.2	77.7	37.9	0.15	33		
9LG1248F1001	48	36 to 60	0.11	5.28	2800	3	106	67.6	0.27	39		
9LG1248M1001			0.07	3.36	2100	2.2	77.7	37.9	0.15	33		

Note 1: Sensor and control options are available for selection. Refer to the table on p. 644.
Note 2: The mark indicates Short LeadTime Service applicable models. See p. 664 for details.

Airflow - Static Pressure Characteristics / PWM Duty - Speed Characteristics Example

9LG1212P1G001 With pulse sensor with PWM control

PWM duty cycle

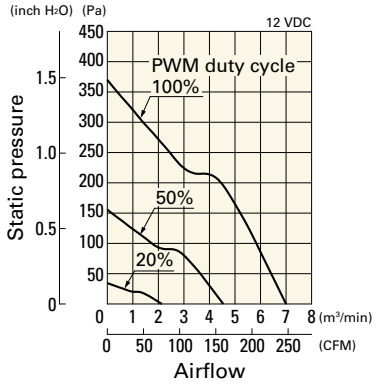

Operating voltage range

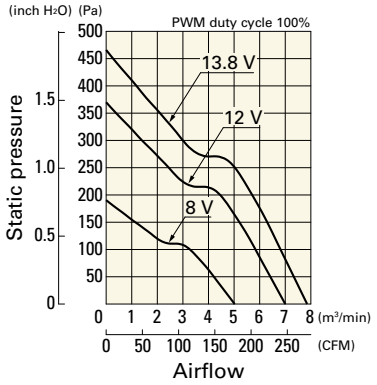

PWM duty - Speed characteristics example

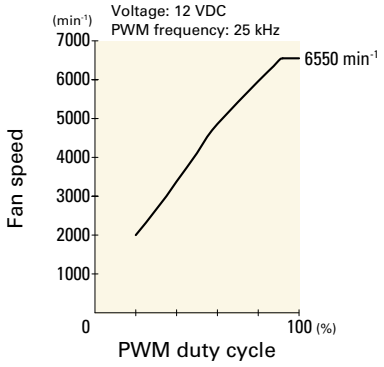

9LG1212P1S001 With pulse sensor with PWM control

PWM duty cycle

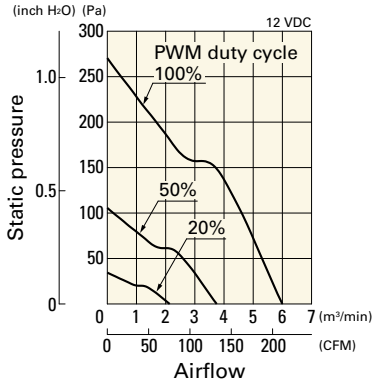

Operating voltage range

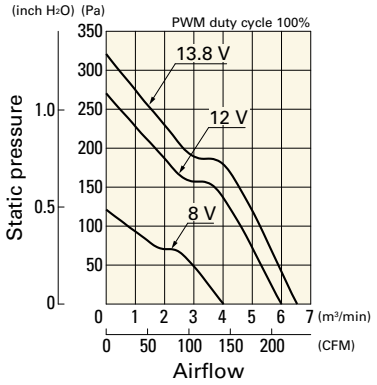

PWM duty - Speed characteristics example

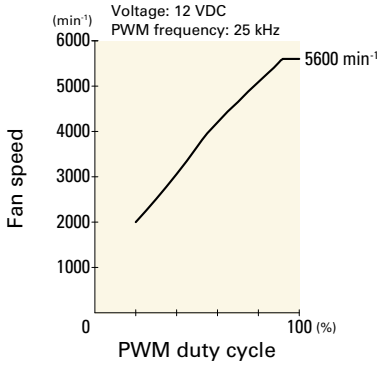

9LG1212P1H001 With pulse sensor with PWM control

PWM duty cycle

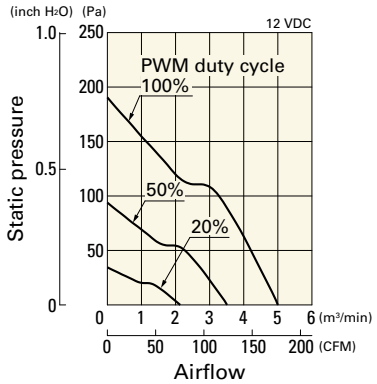

Operating voltage range

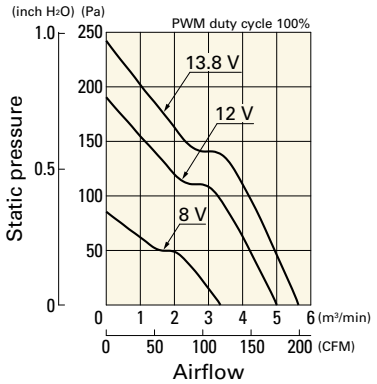

PWM duty - Speed characteristics example

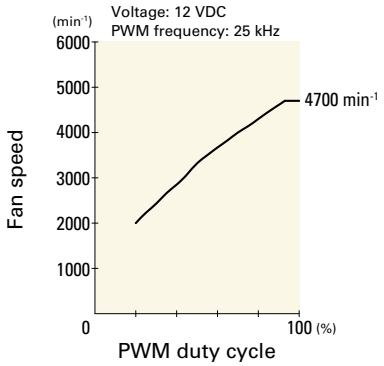

9LG1224P1G001 With pulse sensor with PWM control

PWM duty cycle

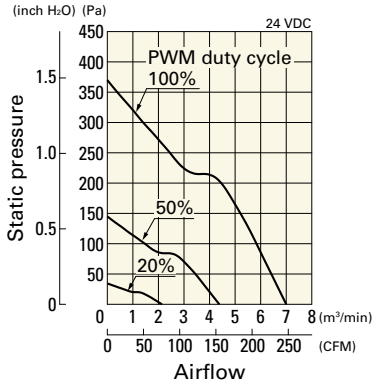

Operating voltage range

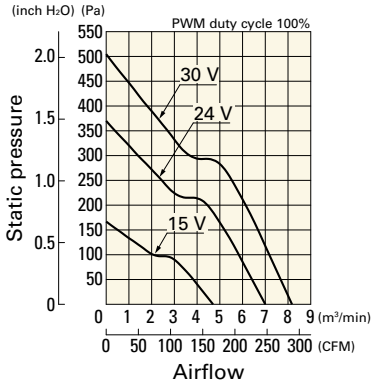

PWM duty - Speed characteristics example

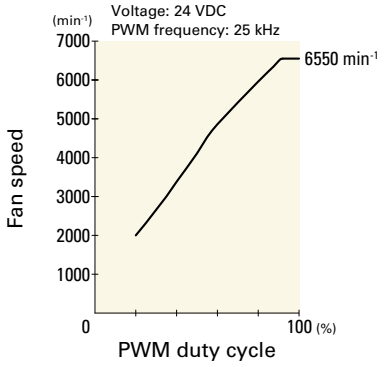

Airflow - Static Pressure Characteristics / PWM Duty - Speed Characteristics Example

9LG1224P1S001 With pulse sensor with PWM control

PWM duty cycle

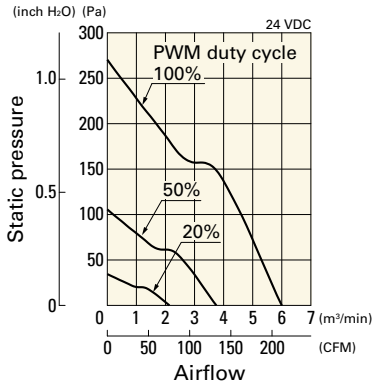

Operating voltage range

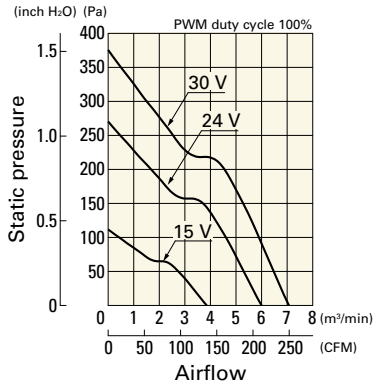

PWM duty - Speed characteristics example

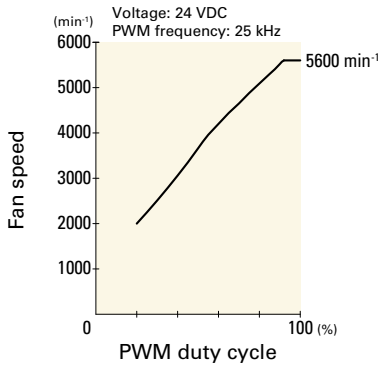

9LG1224P1H001 With pulse sensor with PWM control

PWM duty cycle

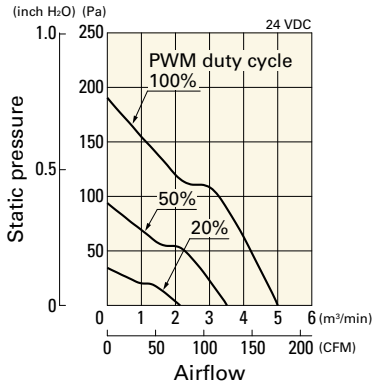

Operating voltage range

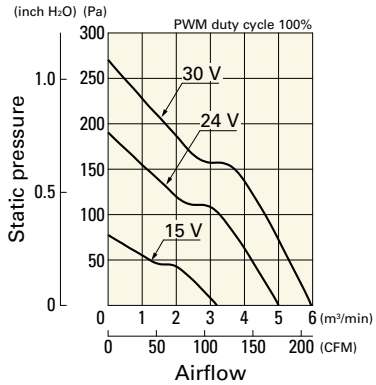

PWM duty - Speed characteristics example

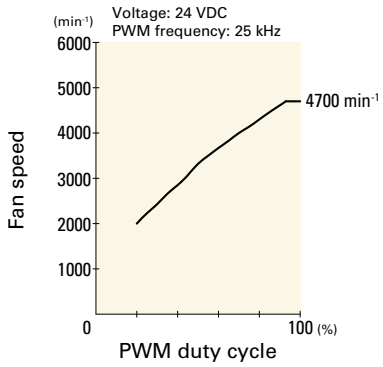

9LG1248P1G001 With pulse sensor with PWM control

PWM duty cycle

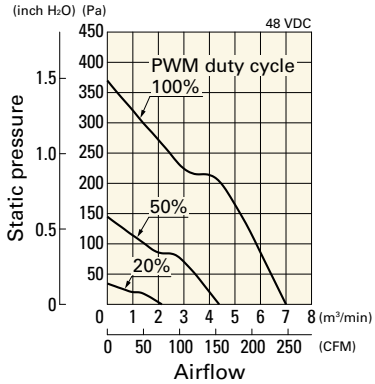

Operating voltage range

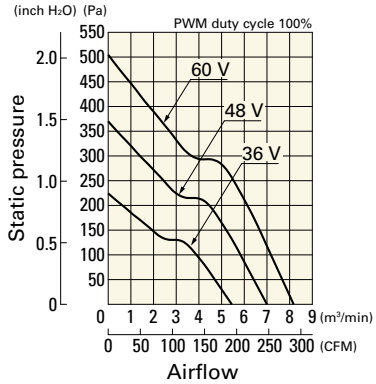

PWM duty - Speed characteristics example

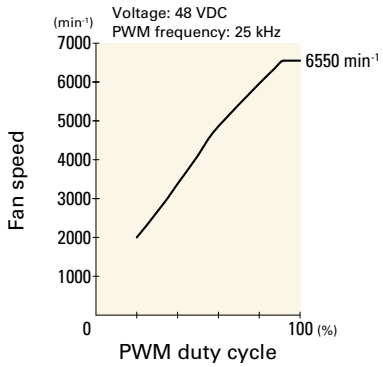

9LG1248P1S001 With pulse sensor with PWM control

PWM duty cycle

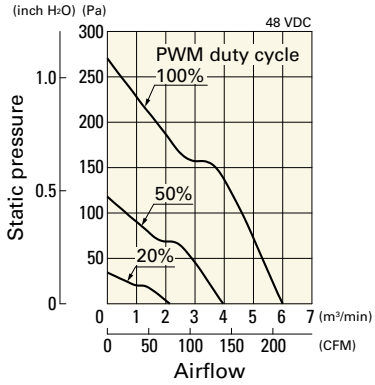

Operating voltage range

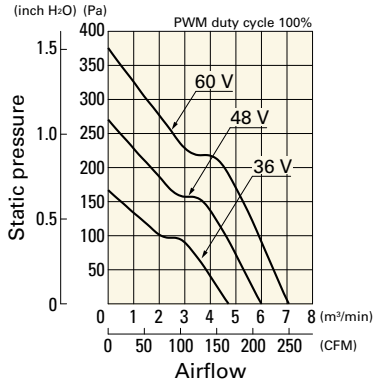

PWM duty - Speed characteristics example

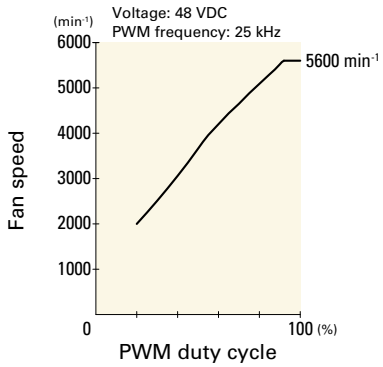

Airflow - Static Pressure Characteristics / PWM Duty - Speed Characteristics Example

9LG1248P1H001 With pulse sensor with PWM control

PWM duty cycle

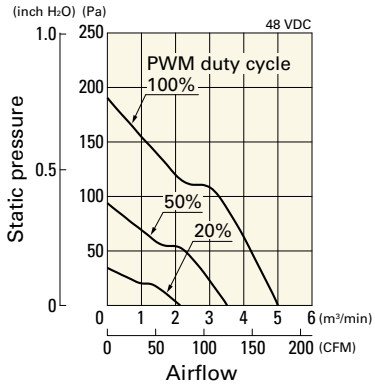

Operating voltage range

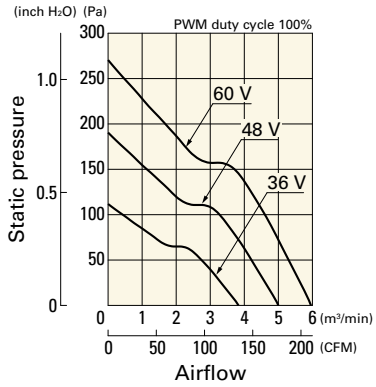

PWM duty - Speed characteristics example

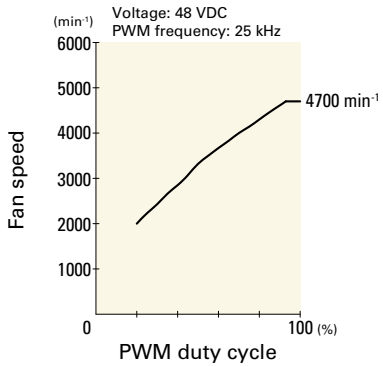

Airflow - Static Pressure Characteristics

9LG1212F1001 With pulse sensor

Operating voltage range

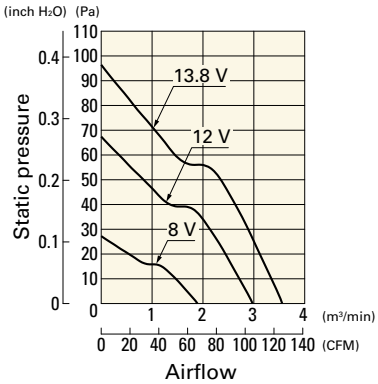

9LG1212M1001 With pulse sensor

Operating voltage range

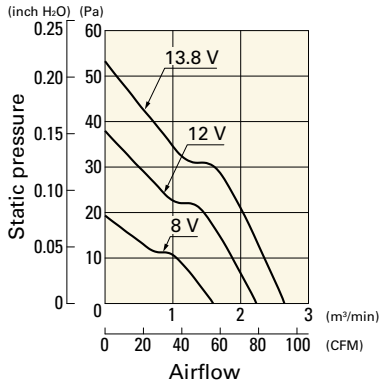

9LG1224A1001 With pulse sensor

Operating voltage range

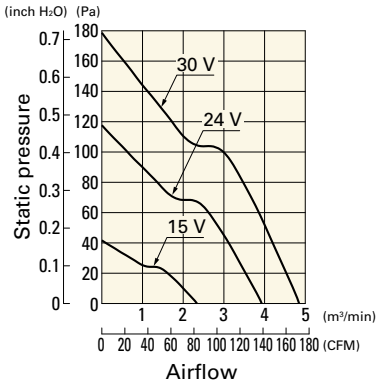

9LG1224F1001 With pulse sensor

Operating voltage range

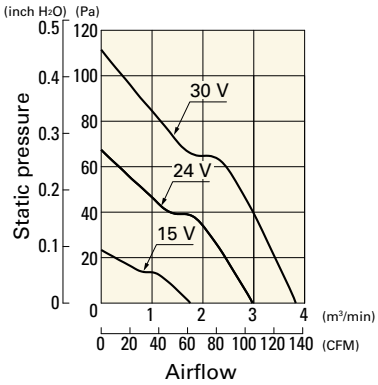

9LG1224M1001 With pulse sensor

Operating voltage range

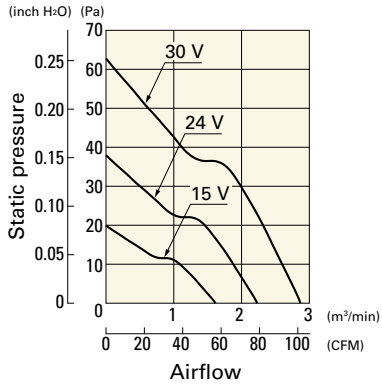

9LG1248F1001 With pulse sensor

Operating voltage range

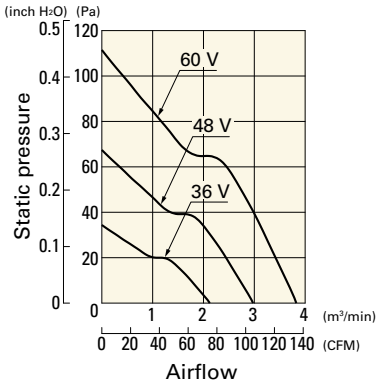

Airflow - Static Pressure Characteristics

9LG1248M1001 With pulse sensor

Operating voltage range

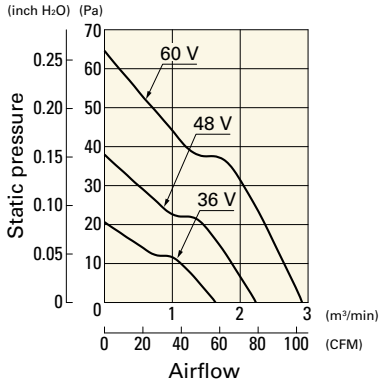

Dimensions (unit: mm) (With pulse sensor with PWM control)

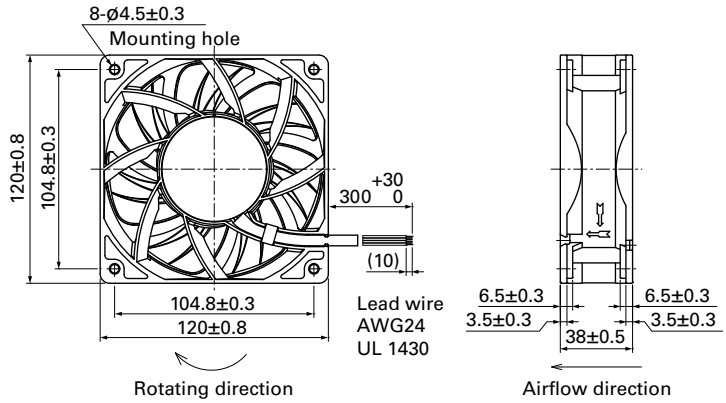

Reference Dimensions of Mounting Holes and Vent Opening (unit: mm)

Inlet side, Outlet side

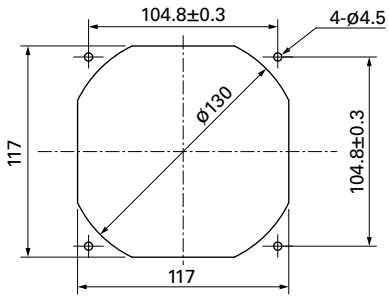

Options

Finger guards	page: p. 591

Model no.: 109-019E, 109-019K

Resin finger guards	page: p. 597

Model no.: 109-1000G

Resin filter kits	page: p. 598

Model no.: 109-1000F13 (13PPI), 109-1000F20 (20PPI),
109-1000F30 (30PPI), 109-1000F40 (40PPI)

140×140×38 mm

San Ace 140L 9LG type

General Specifications

- Material ..... Frame: Aluminum (Black coating), Impeller: Plastic (Flammability: UL 94V-1)
- Expected life ..... See the table below. (L10 life: 90% survival rate for continuous operation in free air at 60˚C, rated voltage) Expected life at 40°C is for reference only.
- Motor protection function ..... Locked rotor burnout protection, Reverse polarity protection For details, please refer to p. 608.
- Dielectric strength ..... 50/60 Hz, 500 VAC, for 1 minute (between lead wire conductors and frame)
- Insulation resistance ..... 10 MΩ min. at 500 VDC (between lead wire conductors and frame)
- Sound pressure level (SPL) ..... A-weighted sound pressure level (SPL) at 1 m away from the air inlet.
- Storage temperature ..... -30 to +70˚C (Non-condensing)
- Lead wire ..... ⊕Red ⊖Black Sensor Yellow Control Brown (For models without PWM control, there is no speed control wiring.)
- Mass ..... 640 g

Specifications

The models listed below **have a pulse sensor with PWM control.**

Model no.	Rated voltage [V]	Operating voltage range [V]	PWM duty cycle* [%]	Rated current [A]	Rated input [W]	Rated speed [min⁻¹]	Max. airflow [m³/min]	Max. airflow [CFM]	Max. static pressure [Pa]	Max. static pressure [inchH₂O]	SPL [dB (A)]	Operating temperature [˚C]	Expected life [h]
9LG1412P1A001	12	10.2 to 13.8	100	3.72	44.64	6900	8.0	282	516	2.07	68	-20 to +70	180000/60˚C (215000/40˚C)
			20	0.27	3.24	2300	2.66	93	80	0.32	39		
9LG1412P1H001			100	1.7	20.4	5200	6.0	212	300	1.2	62		
			20	0.27	3.24	2300	2.66	93	80	0.32	39		
9LG1412P1M001			100	0.6	7.2	3300	3.7	130	170	0.68	46		
			20	0.16	1.92	1300	1.45	51	26	0.1	29		
9LG1424P1A001	24	20.4 to 27.6	100	1.86	44.64	6900	8.0	282	516	2.07	68		
			20	0.17	4.08	2300	2.66	93	80	0.32	39		
9LG1424P1H001			100	0.85	20.4	5200	6.0	212	300	1.2	62		
			20	0.16	3.84	2300	2.66	93	80	0.32	39		
9LG1424P1M001			100	0.3	7.2	3300	3.7	130	170	0.68	46		
			20	0.11	2.64	1300	1.45	51	26	0.1	29		
9LG1448P1A001	48	40.8 to 55.2	100	0.92	44.16	6900	8.0	282	516	2.07	68		
			20	0.11	5.28	2300	2.66	93	80	0.32	39		
9LG1448P1H001			100	0.42	20.16	5200	6.0	212	300	1.2	62		
			20	0.11	5.28	2300	2.66	93	80	0.32	39		
9LG1448P1M001			100	0.15	7.2	3300	3.7	130	170	0.68	46		
			20	0.09	4.32	1300	1.45	51	26	0.1	29		

PWM frequency is 25 kHz. Models without ratings for 0% PWM duty cycle have zero speed at 0%. When control terminal is open, speed is the same as at 100% duty cycle.

The models listed below **have a pulse sensor.**

Model no.	Rated voltage [V]	Operating voltage range [V]	Rated current [A]	Rated input [W]	Rated speed [min⁻¹]	Max. airflow [m³/min]	Max. airflow [CFM]	Max. static pressure [Pa]	Max. static pressure [inchH₂O]	SPL [dB (A)]	Operating temperature [˚C]	Expected life [h]
9LG1412L1001	12	10.2 to 13.8	0.27	3.3	2300	2.6	91.9	80	0.32	39	-20 to +70	180000/60˚C (215000/40˚C)
9LG1424L1001	24	20.4 to 27.6	0.17	4.1	2300	2.6	91.9	80	0.32	39		
9LG1448L1001	48	40.8 to 55.2	0.11	5.3	2300	2.6	91.9	80	0.32	39		

Note 1: Sensor and control options are available for selection. Refer to the table on p. 644.
Note 2: The mark indicates Short LeadTime Service applicable models. See p. 664 for details.

Airflow - Static Pressure Characteristics / PWM Duty - Speed Characteristics Example

9LG1412P1A001 With pulse sensor with PWM control

PWM duty cycle

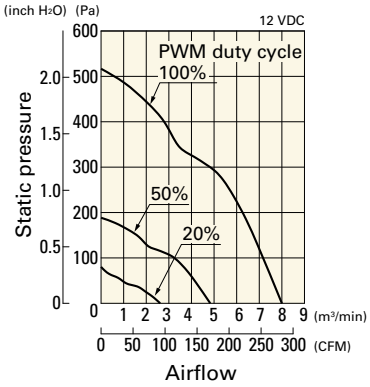

Operating voltage range

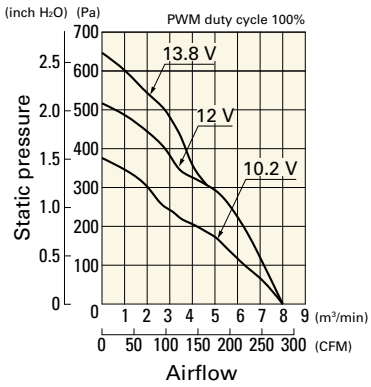

PWM duty - Speed characteristics example

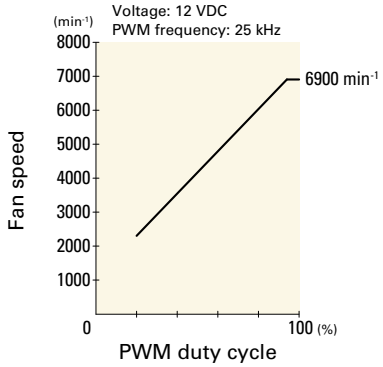

9LG1412P1H001 With pulse sensor with PWM control

PWM duty cycle

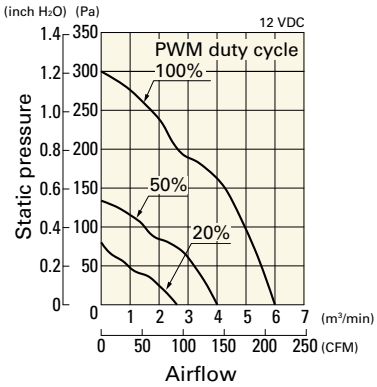

Operating voltage range

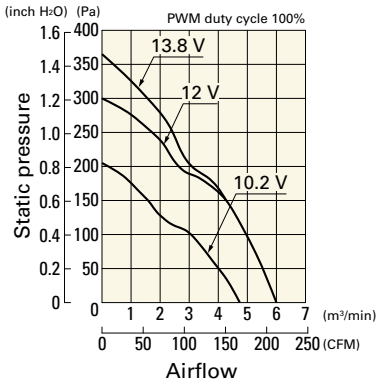

PWM duty - Speed characteristics example

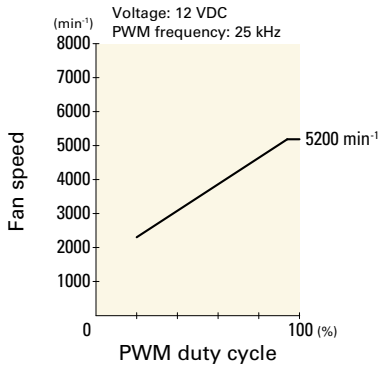

9LG1412P1M001 With pulse sensor with PWM control

PWM duty cycle

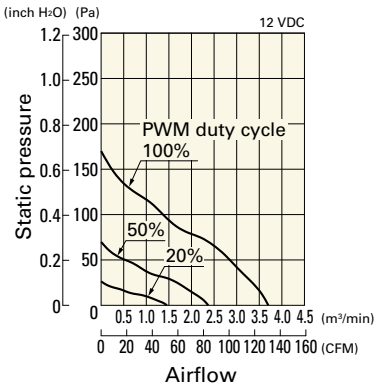

Operating voltage range

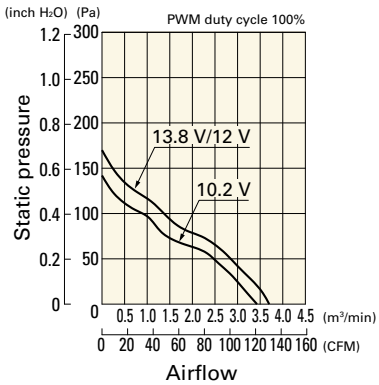

PWM duty - Speed characteristics example

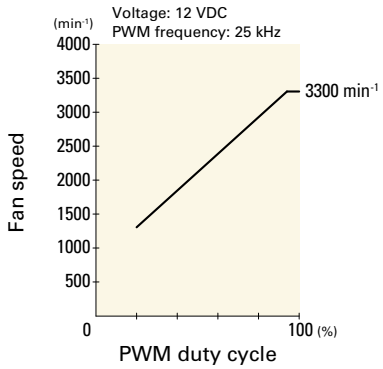

9LG1424P1A001 With pulse sensor with PWM control

PWM duty cycle

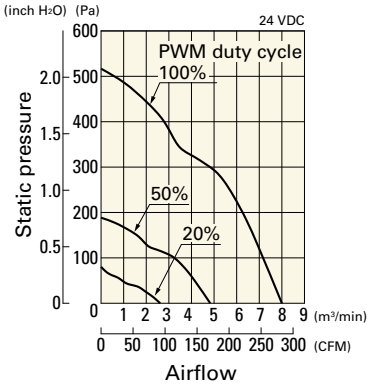

Operating voltage range

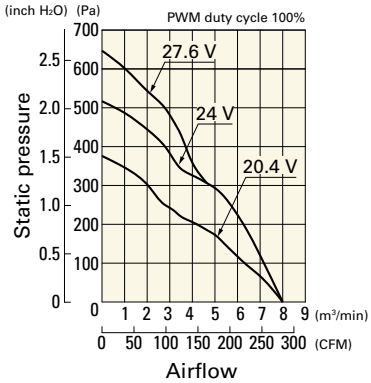

PWM duty - Speed characteristics example

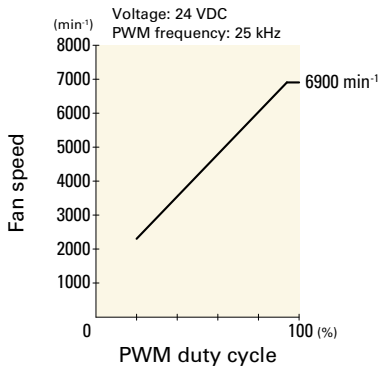

Airflow - Static Pressure Characteristics / PWM Duty - Speed Characteristics Example

9LG1424P1H001 With pulse sensor with PWM control

PWM duty cycle

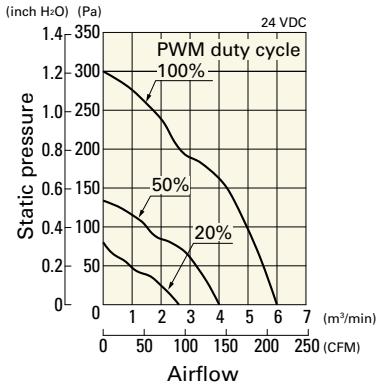

Operating voltage range

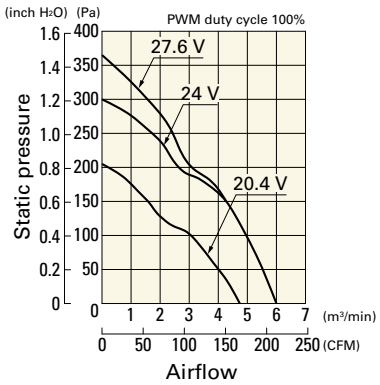

PWM duty - Speed characteristics example

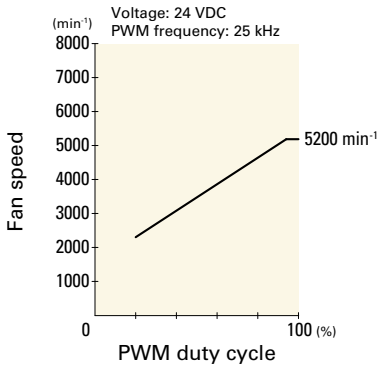

9LG1424P1M001 With pulse sensor with PWM control

PWM duty cycle

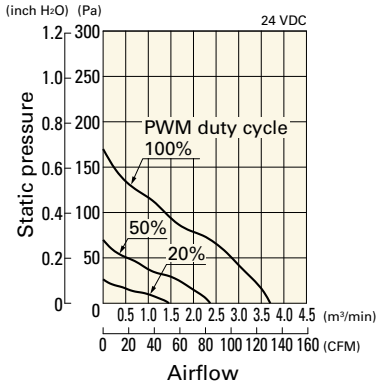

Operating voltage range

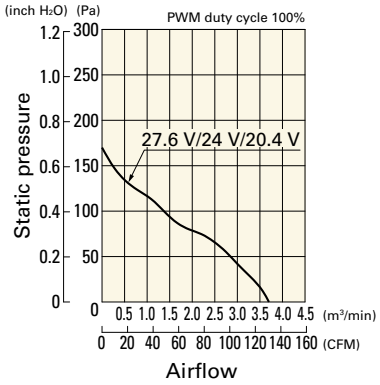

PWM duty - Speed characteristics example

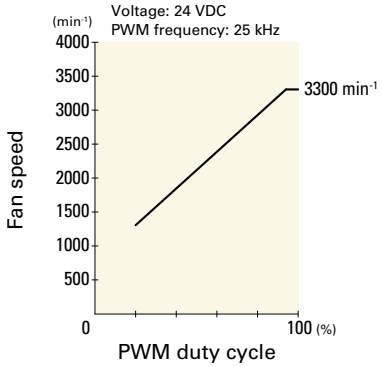

9LG1448P1A001 With pulse sensor with PWM control

PWM duty cycle

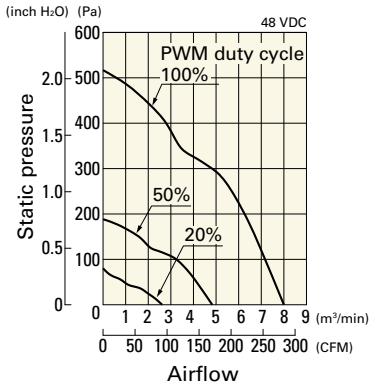

Operating voltage range

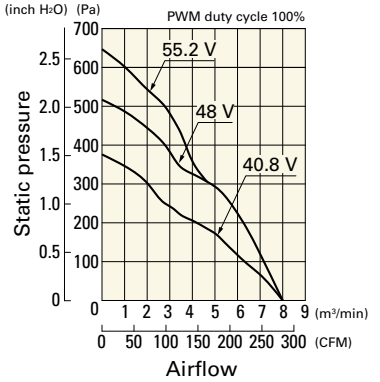

PWM duty - Speed characteristics example

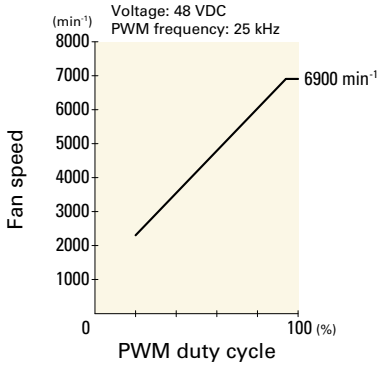

9LG1448P1H001 With pulse sensor with PWM control

PWM duty cycle

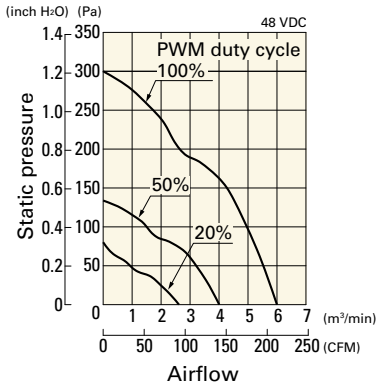

Operating voltage range

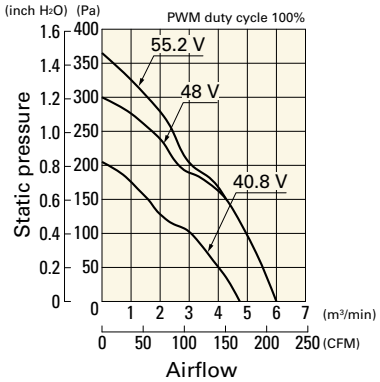

PWM duty - Speed characteristics example

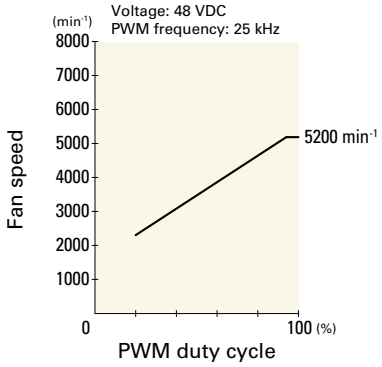

Airflow - Static Pressure Characteristics / PWM Duty - Speed Characteristics Example

9LG1448P1M001 With pulse sensor with PWM control

PWM duty cycle

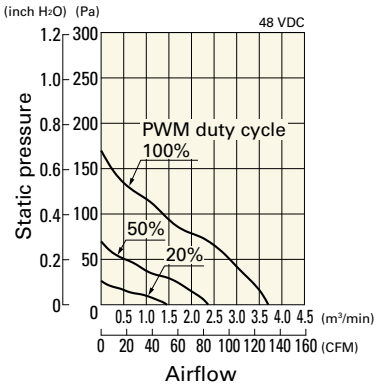

Operating voltage range

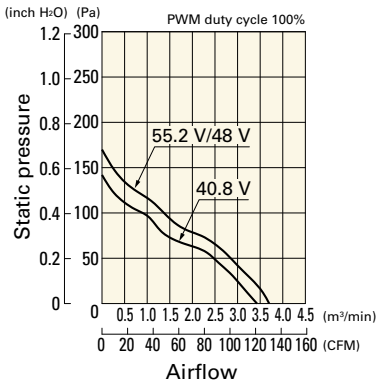

PWM duty - Speed characteristics example

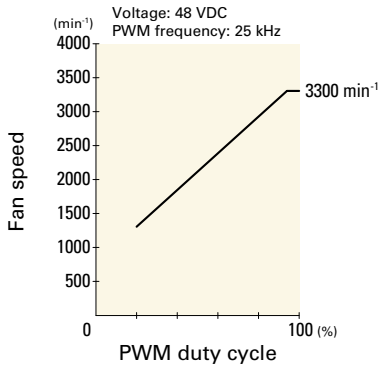

Airflow - Static Pressure Characteristics

9LG1412L1001 With pulse sensor

Operating voltage range

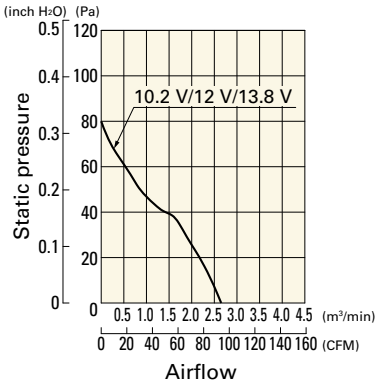

9LG1424L1001 With pulse sensor

Operating voltage range

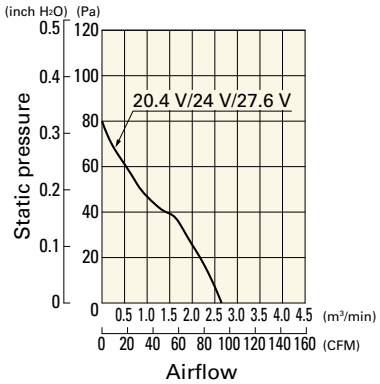

9LG1448L1001 With pulse sensor

Operating voltage range

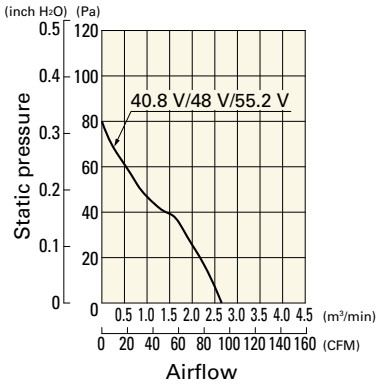

Dimensions (unit: mm) (With pulse sensor with PWM control)

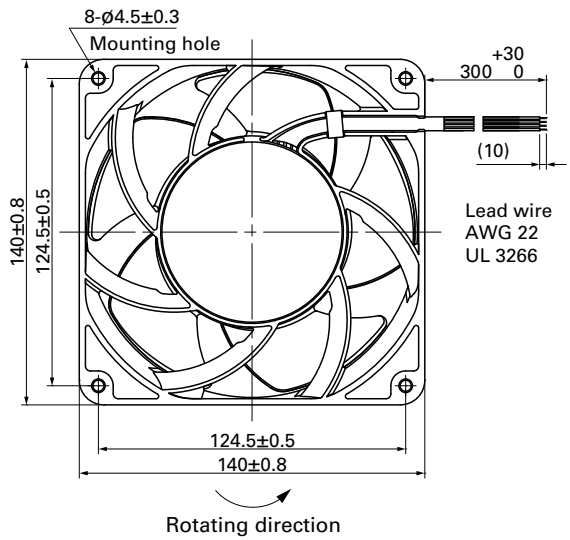

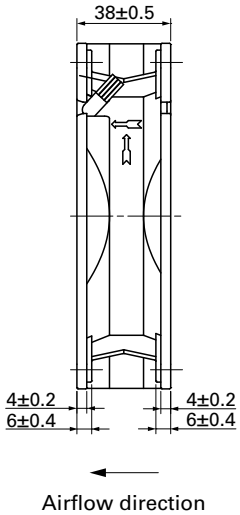

Reference Dimensions of Mounting Holes and Vent Opening (unit: mm)

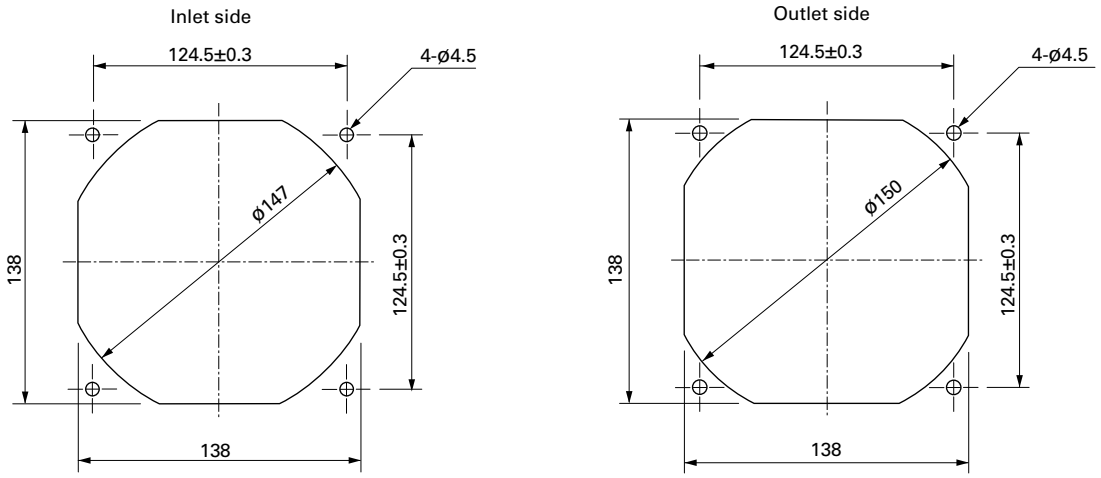

Options

Finger guards page: p. 591

Model no.: 109-719, 109-719H

140×140×51 mm

San Ace 140L 9LG type

General Specifications

- Material ..... Frame: Aluminum (Black coating), Impeller: Plastic (Flammability: UL 94V-0)
- Expected life ..... See the table below. (L10 life: 90% survival rate for continuous operation in free air at 60˚C, rated voltage) Expected life at 40°C is for reference only.
- Motor protection function ..... Locked rotor burnout protection, Reverse polarity protection For details, please refer to p. 608.
- Dielectric strength ..... 50/60 Hz, 500 VAC, for 1 minute (between lead wire conductors and frame)
- Insulation resistance ..... 10 MΩ min. at 500 VDC (between lead wire conductors and frame)
- Sound pressure level (SPL) ..... A-weighted sound pressure level (SPL) at 1 m away from the air inlet.
- Storage temperature ..... -30 to +70˚C (Non-condensing)
- Lead wire ..... ⊕Red ⊖Black Sensor Yellow Control Brown (For models without PWM control, there is no speed control wiring.)
- Mass ..... 790 g

Specifications

The models listed below **have a pulse sensor with PWM control.**

Model no.	Rated voltage [V]	Operating voltage range [V]	PWM duty cycle* [%]	Rated current [A]	Rated input [W]	Rated speed [min⁻¹]	Max. airflow [m³/min]	Max. airflow [CFM]	Max. static pressure [Pa]	Max. static pressure [inchH₂O]	SPL [dB (A)]	Operating temperature [˚C]	Expected life [h]
9LG1412P5G001	12	10.2 to 13.8	100	5.16	62	7500	9.0	318	655	2.63	69	-20 to +70	180000/60˚C (215000/40˚C)
			20	0.31	3.72	2300	2.75	97	80	0.32	38		
9LG1412P5S001			100	1.83	22	5000	6.0	212	295	1.18	57		
			20	0.31	3.72	2300	2.75	97	80	0.32	38		
9LG1424P5G001	24	20.4 to 27.6	100	2.58	62	7500	9.0	318	655	2.63	69		
			20	0.16	3.84	2300	2.75	97	80	0.32	38		
9LG1424P5S001			100	0.91	22	5000	6.0	212	295	1.18	57		
			20	0.16	3.84	2300	2.75	97	80	0.32	38		
9LG1448P5G001	48	40.8 to 55.2	100	1.29	62	7500	9.0	318	655	2.63	69		
			20	0.12	5.76	2300	2.75	97	80	0.32	38		
9LG1448P5S001			100	0.45	22	5000	6.0	212	295	1.18	57		
			20	0.12	5.76	2300	2.75	97	80	0.32	38		

PWM frequency is 25 kHz. Models without ratings for 0% PWM duty cycle have zero speed at 0%. When control terminal is open, speed is the same as at 100% duty cycle.

The models listed below **have a pulse sensor.**

Model no.	Rated voltage [V]	Operating voltage range [V]	Rated current [A]	Rated input [W]	Rated speed [min⁻¹]	Max. airflow [m³/min]	Max. airflow [CFM]	Max. static pressure [Pa]	Max. static pressure [inchH₂O]	SPL [dB (A)]	Operating temperature [˚C]	Expected life [h]
9LG1412A5001	12	10.2 to 13.8	2.61	31.4	5700	6.9	243.8	500	2	61	-20 to +70	180000/60˚C (215000/40˚C)
9LG1412H5001			1	12	4100	4.9	173.1	260	1.04	52		
9LG1412M5001			0.43	5.16	2600	3.1	109.5	100	0.4	40		
9LG1424A5001	24	20.4 to 27.6	1.21	29.1	5700	6.9	243.8	540	2.17	61		
9LG1424H5001			0.55	13.2	4100	4.9	173.1	260	1.04	52		
9LG1424M5001			0.23	5.52	2600	3.1	109.5	100	0.4	40		
9LG1448A5001	48	40.8 to 55.2	0.66	31.7	5700	6.9	243.8	540	2.17	61		
9LG1448H5001			0.31	14.9	4100	4.9	173.1	260	1.04	52		
9LG1448M5001			0.15	7.2	2600	3.1	109.5	100	0.4	40		

Note 1: Sensor and control options are available for selection. Refer to the table on p. 644.
Note 2: The mark indicates Short LeadTime Service applicable models. See p. 664 for details.

Airflow - Static Pressure Characteristics / PWM Duty - Speed Characteristics Example

9LG1412P5G001 With pulse sensor with PWM control

PWM duty cycle

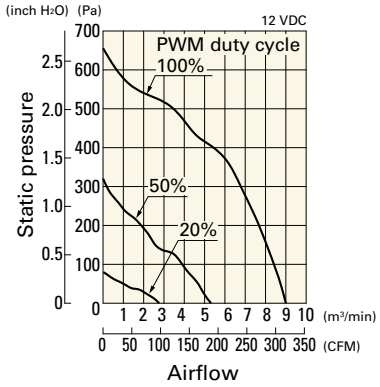

Operating voltage range

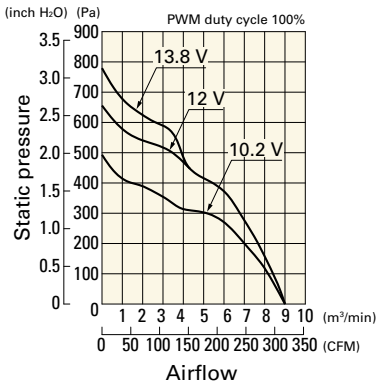

PWM duty - Speed characteristics example

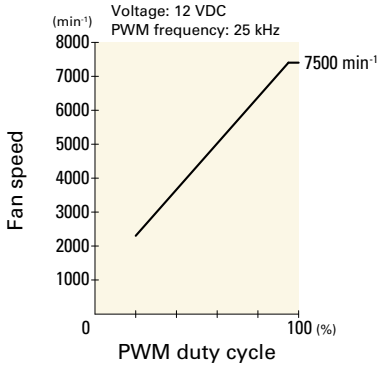

9LG1412P5S001 With pulse sensor with PWM control

PWM duty cycle

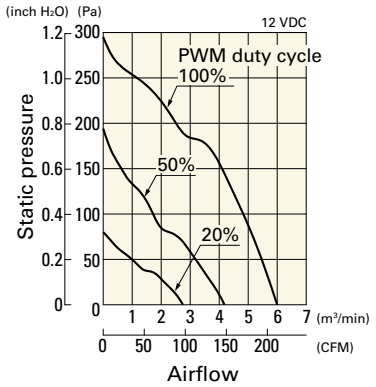

Operating voltage range

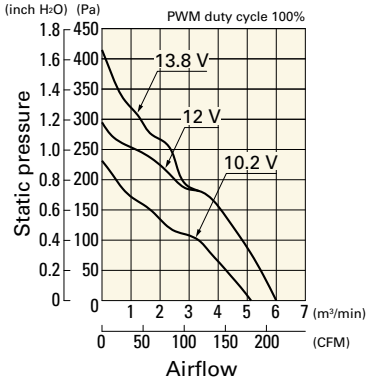

PWM duty - Speed characteristics example

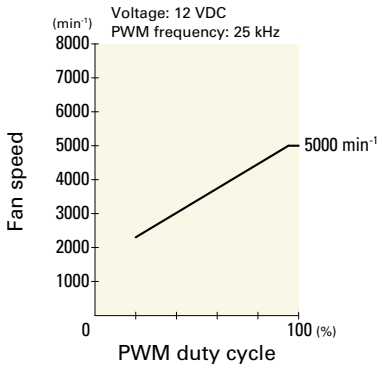

9LG1424P5G001 With pulse sensor with PWM control

PWM duty cycle

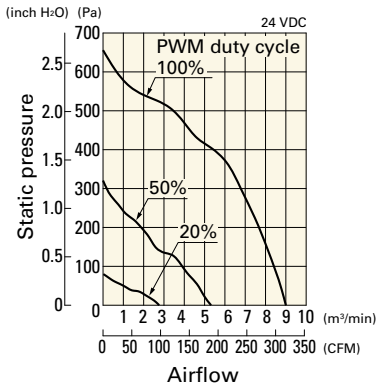

Operating voltage range

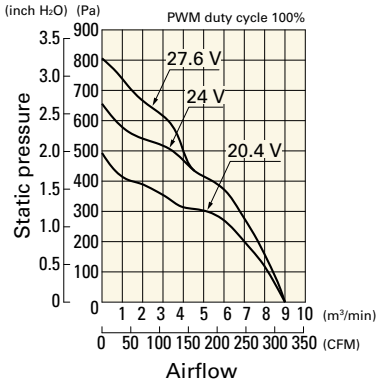

PWM duty - Speed characteristics example

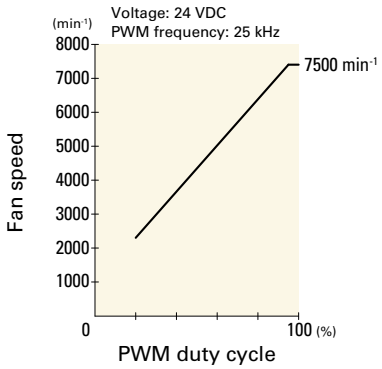

9LG1424P5S001 With pulse sensor with PWM control

PWM duty cycle

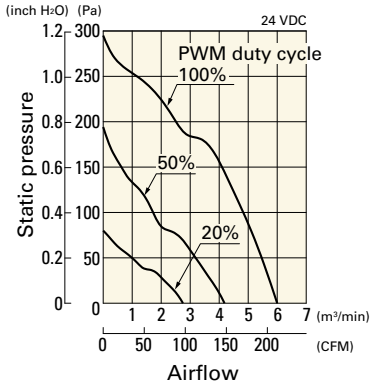

Operating voltage range

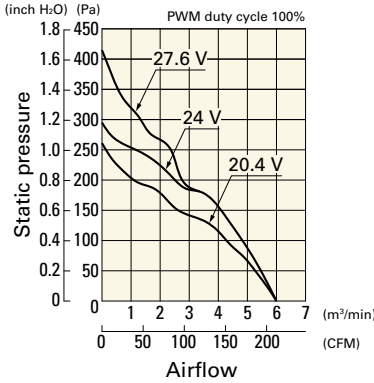

PWM duty - Speed characteristics example

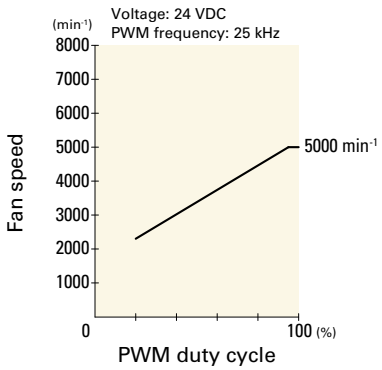

Airflow - Static Pressure Characteristics / PWM Duty - Speed Characteristics Example

9LG1448P5G001 With pulse sensor with PWM control

PWM duty cycle

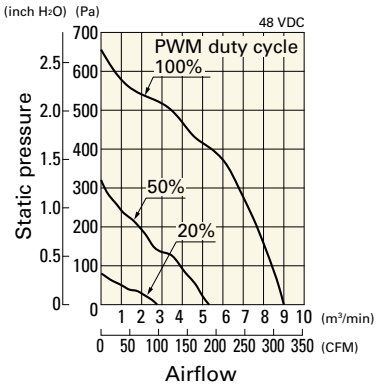

Operating voltage range

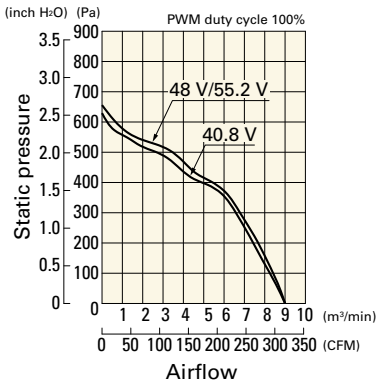

PWM duty - Speed characteristics example

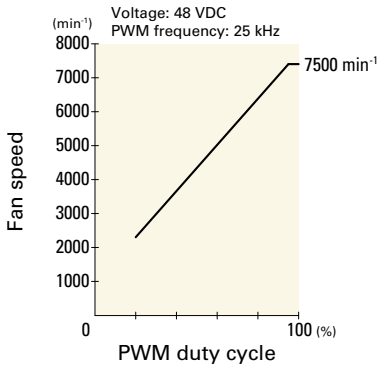

9LG1448P5S001 With pulse sensor with PWM control

PWM duty cycle

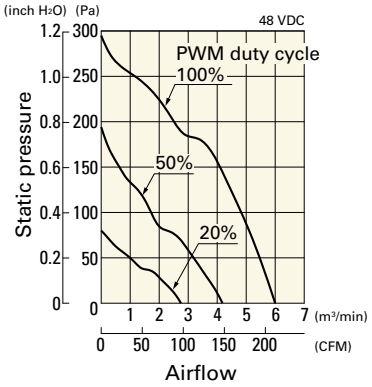

Operating voltage range

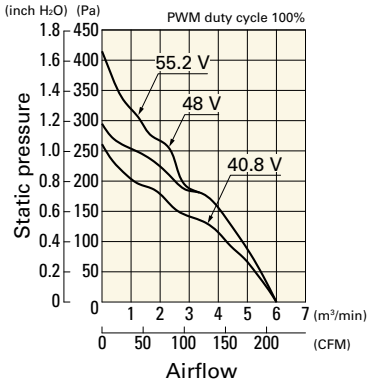

PWM duty - Speed characteristics example

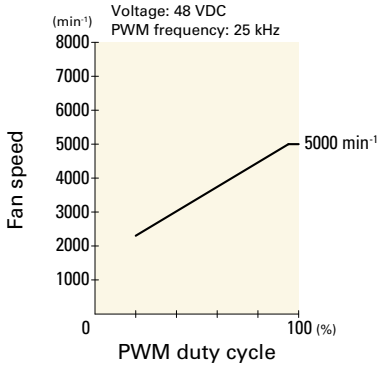

Airflow - Static Pressure Characteristics

9LG1412A5001 With pulse sensor

Operating voltage range

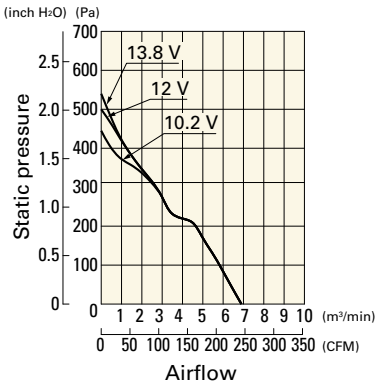

9LG1412H5001 With pulse sensor

Operating voltage range

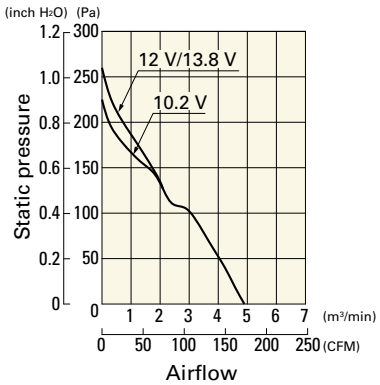

9LG1412M5001 With pulse sensor

Operating voltage range

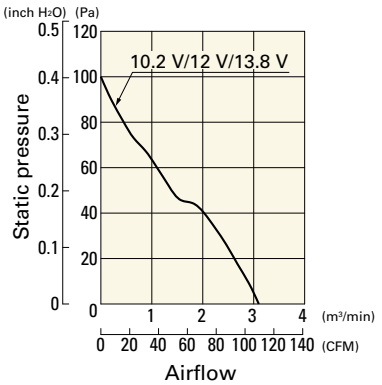

Airflow - Static Pressure Characteristics

9LG1424A5001 With pulse sensor

Operating voltage range

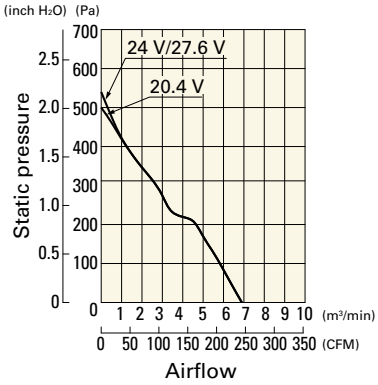

9LG1424H5001 With pulse sensor

Operating voltage range

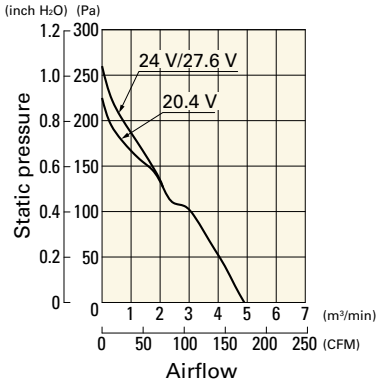

9LG1424M5001 With pulse sensor

Operating voltage range

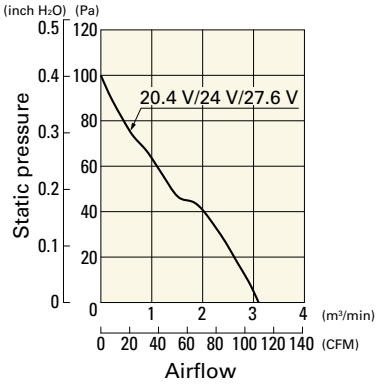

9LG1448A5001 With pulse sensor

Operating voltage range

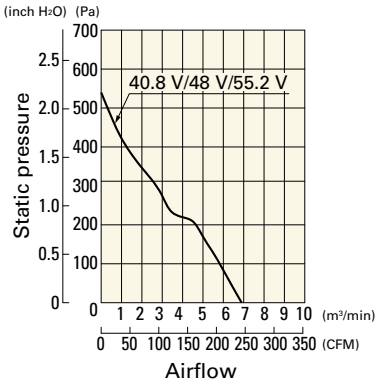

9LG1448H5001 With pulse sensor

Operating voltage range

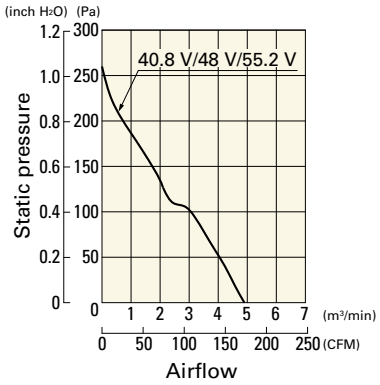

9LG1448M5001 With pulse sensor

Operating voltage range

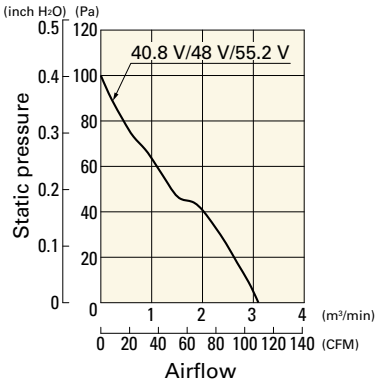

Dimensions (unit: mm) (With pulse sensor with PWM control)

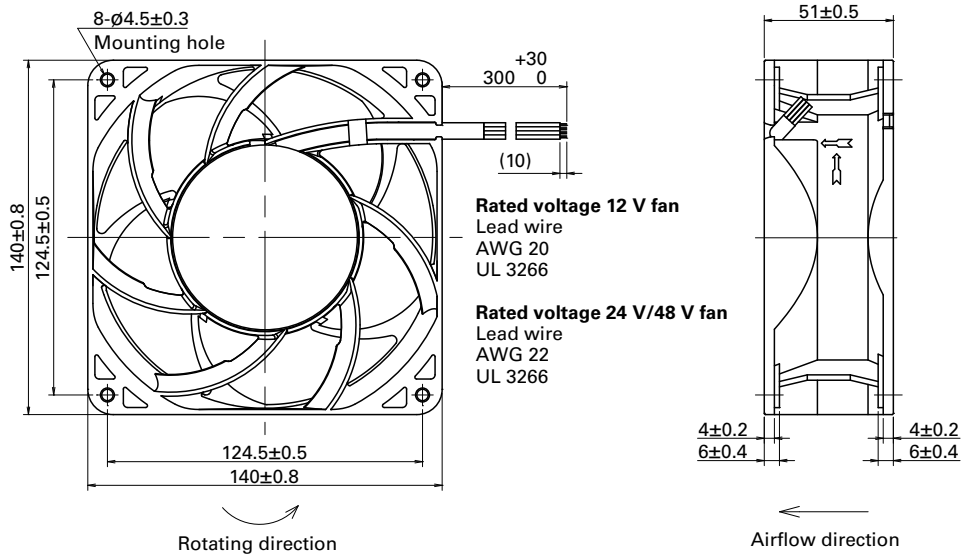

Rated voltage 12 V fan
Lead wire
AWG 20
UL 3266

Rated voltage 24 V/48 V fan
Lead wire
AWG 22
UL 3266

Reference Dimensions of Mounting Holes and Vent Opening (unit: mm)

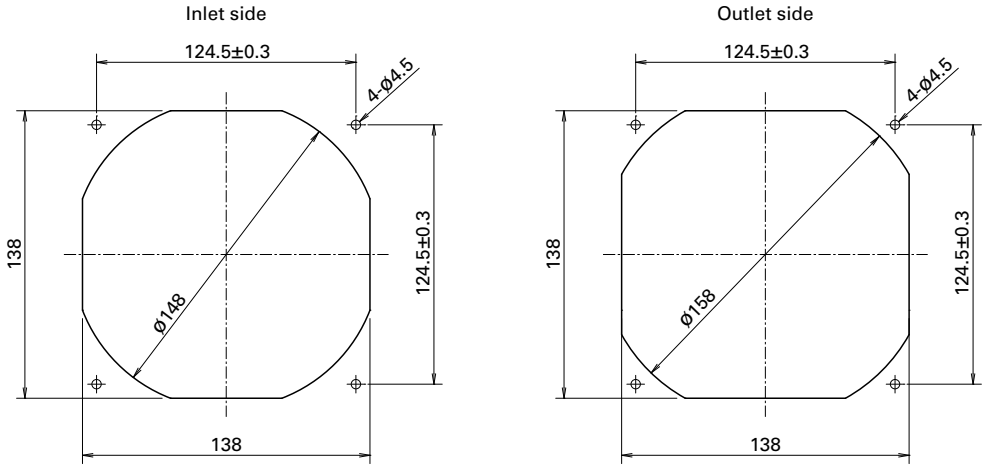

Options

Finger guards page: p. 591

Model no.: 109-719, 109-719H

ø172×150×51 mm

San Ace 172L 9L type

Sidecut type

General Specifications

- Material ..... Frame: Aluminum, Impeller: Plastic (Flammability: UL 94V-1)
- Expected life ..... See the table below. (L10 life: 90% survival rate for continuous operation in free air at 60˚C, rated voltage) Expected life at 40°C is for reference only.
- Motor protection function ..... Locked rotor burnout protection, Reverse polarity protection For details, please refer to p. 608.
- Dielectric strength ..... 50/60 Hz, 500 VAC, for 1 minute (between lead wire conductors and frame)
- Insulation resistance ..... 10 MΩ min. at 500 VDC (between lead wire conductors and frame)
- Sound pressure level (SPL) ..... A-weighted sound pressure level (SPL) at 1 m away from the air inlet.
- Storage temperature ..... -30 to +70˚C (Non-condensing)
- Lead wire ..... ⊕Red ⊖Black or Blue Sensor Yellow
- Mass ..... 760 g

Specifications

The models listed below **have a pulse sensor.**

Model no.	Rated voltage [V]	Operating voltage range [V]	Rated current [A]	Rated input [W]	Rated speed [min⁻¹]	Max. airflow [m³/min]	Max. airflow [CFM]	Max. static pressure [Pa]	Max. static pressure [inchH₂O]	SPL [dB (A)]	Operating temperature [˚C]	Expected life [h]
109L5712H501	12	10.2 to 13.8	1.2	14.4	3050	6.4	226	137.2	0.551	52	-20 to +70	100000/60˚C (135000/40˚C)
109L5712M501			0.48	5.76	2000	4.2	148	67.6	0.271	41		
109L5724H501	24	20.4 to 27.6	0.58	13.92	3050	6.4	226	137.2	0.551	52		
109L5724M501			0.2	4.8	2000	4.2	148	67.6	0.271	41		
109L5748H501	48	40.8 to 55.2	0.28	13.44	3050	6.4	226	137.2	0.551	52		
109L5748M501			0.11	5.28	2000	4.2	148	67.6	0.271	41		

Note: Sensor and control options are available for selection. Refer to the table on p. 635.

Airflow - Static Pressure Characteristics

109L5712H501 With pulse sensor

Operating voltage range

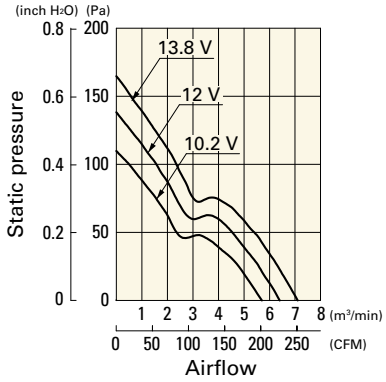

109L5712M501 With pulse sensor

Operating voltage range

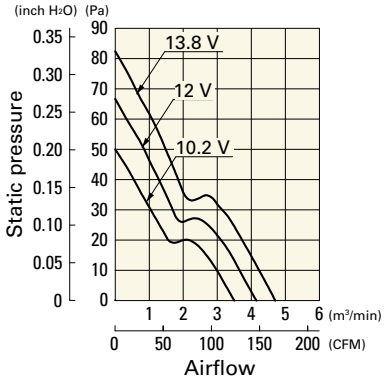

109L5724H501 With pulse sensor

Operating voltage range

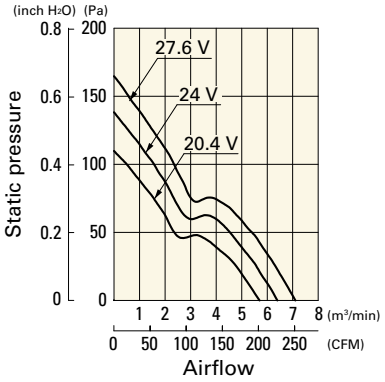

Airflow - Static Pressure Characteristics

109L5724M501 With pulse sensor

Operating voltage range

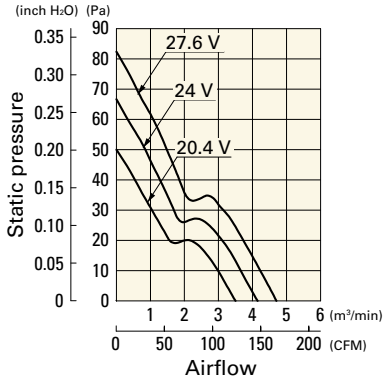

109L5748H501 With pulse sensor

Operating voltage range

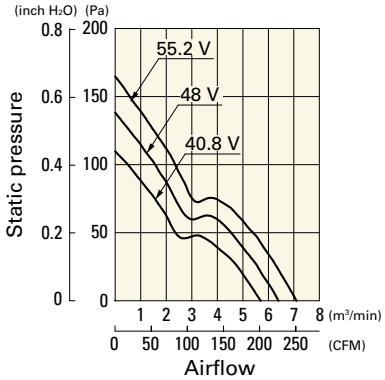

109L5748M501 With pulse sensor

Operating voltage range

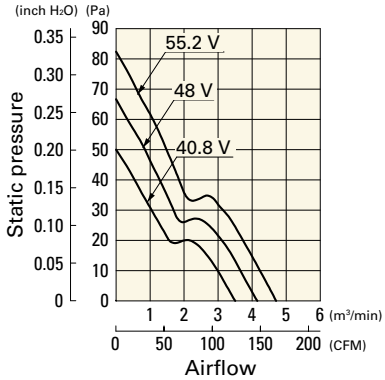

Dimensions (unit: mm)

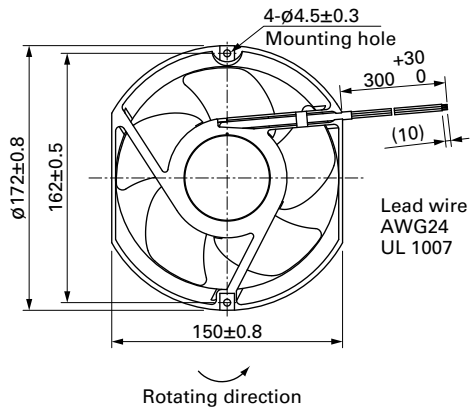

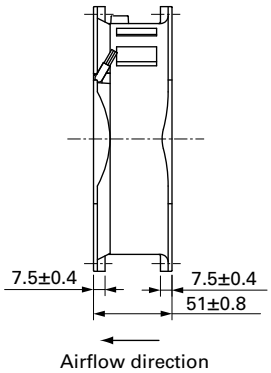

Reference Dimensions of Mounting Holes and Vent Opening (unit: mm)

Inlet side, Outlet side

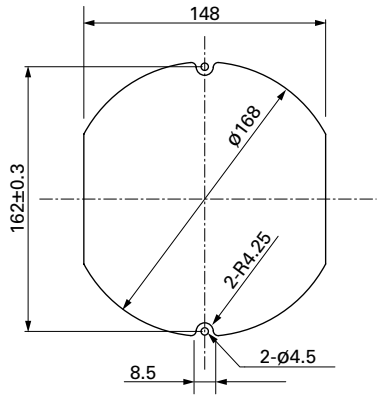

Options

Finger guards page: p. 592

Model no.: 109-319J, 109-319E, 109-319H

ø172×51 mm

San Ace 172L 9L type

Round type

General Specifications

- Material ..... Frame: Aluminum, Impeller: Plastic (Flammability: UL 94V-1)
- Expected life ..... See the table below. (L10 life: 90% survival rate for continuous operation in free air at 60˚C, rated voltage) Expected life at 40°C is for reference only.
- Motor protection function ..... Locked rotor burnout protection, Reverse polarity protection For details, please refer to p. 608.
- Dielectric strength ..... 50/60 Hz, 500 VAC, for 1 minute (between lead wire conductors and frame)
- Insulation resistance ..... 10 MΩ min. at 500 VDC (between lead wire conductors and frame)
- Sound pressure level (SPL) ..... A-weighted sound pressure level (SPL) at 1 m away from the air inlet.
- Storage temperature ..... -30 to +70˚C (Non-condensing)
- Lead wire ..... ⊕Red ⊖Black or Blue Sensor Yellow
- Mass ..... 780 g

Specifications

The models listed below **have a pulse sensor.**

Model no.	Rated voltage [V]	Operating voltage range [V]	Rated current [A]	Rated input [W]	Rated speed [min⁻¹]	Max. airflow [m³/min]	Max. airflow [CFM]	Max. static pressure [Pa]	Max. static pressure [inchH₂O]	SPL [dB (A)]	Operating temperature [˚C]	Expected life [h]
109L1712H501	12	10.2 to 13.8	1.2	14.4	3050	6.4	226	137.2	0.551	47	-20 to +70	100000/60˚C (135000/40˚C)
109L1712M501			0.48	5.76	2000	4.2	148	67.6	0.271	36		
109L1724H501	24	20.4 to 27.6	0.58	13.92	3050	6.4	226	137.2	0.551	47		
109L1724M501			0.2	4.8	2000	4.2	148	67.6	0.271	36		
109L1748H501	48	40.8 to 55.2	0.28	13.44	3050	6.4	226	137.2	0.551	47		
109L1748M501			0.11	5.28	2000	4.2	148	67.6	0.271	36		

Note: Sensor and control options are available for selection. Refer to the table on p. 635.

Airflow - Static Pressure Characteristics

109L1712H501 With pulse sensor

Operating voltage range

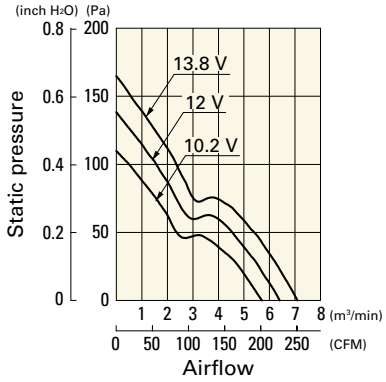

109L1712M501 With pulse sensor

Operating voltage range

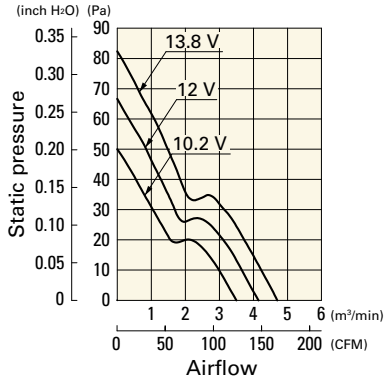

109L1724H501 With pulse sensor

Operating voltage range

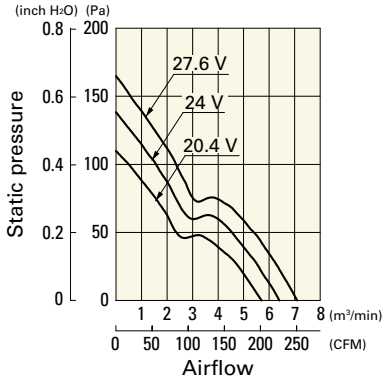

Airflow - Static Pressure Characteristics

109L1724M501 With pulse sensor

Operating voltage range

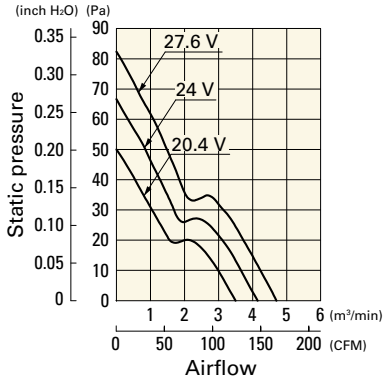

109L1748H501 With pulse sensor

Operating voltage range

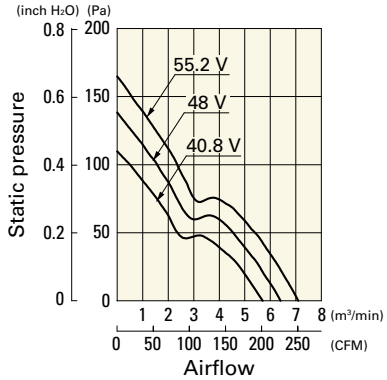

109L1748M501 With pulse sensor

Operating voltage range

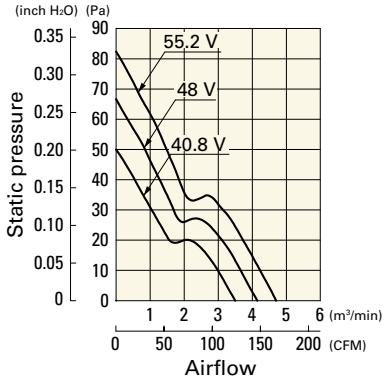

Dimensions (unit: mm)

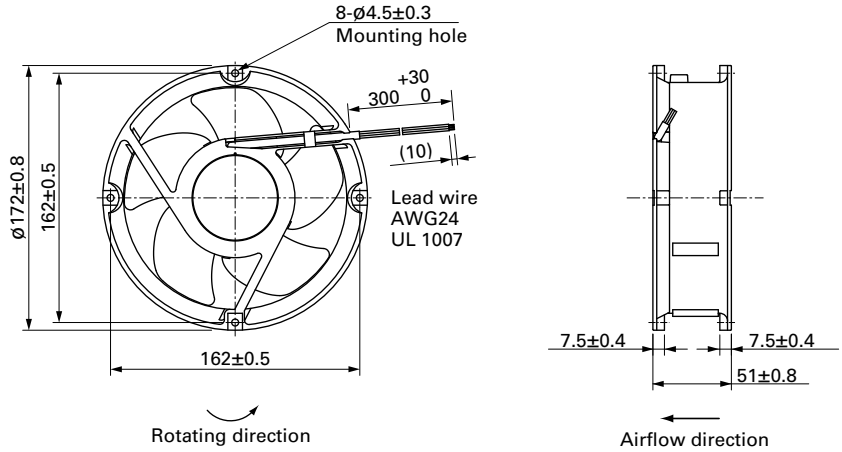

Reference Dimensions of Mounting Holes and Vent Opening (unit: mm)

Inlet side, Outlet side

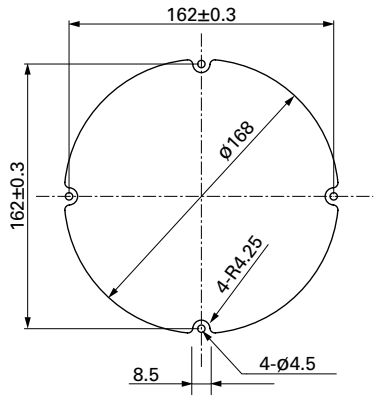

Options

Finger guards page: p. 592

Model no.: 109-319E, 109-319H, 109-1066

Wide Temperature Range Fan

These fans can be used in a wide temperature range from -40 to +85˚C.

Model Numbering System

Not every combination of the following codes or characters is available. Contact us for an available combination.

9GT	04	12	P	3	J	001
Type name	Frame size	Voltage	PWM control	Frame thickness	Speed code	Individual customer's spec

Type name	9GT
Frame size (mm)	04 (40×40), 06 (60×60), 08 (80×80), 09 (92×92), 12 (120×120)
Voltage (V)	12, 24 12, 24
Frame thickness (mm)	1, 3, 4 38, 28, 25
Speed code	J

How to Read Specifications (DC fan)

The following is a sample. See respective product pages for detailed information.

Model no.	Rated voltage [V]	Operating voltage range [V]	Rated current [A]	Rated input [W]	Rated speed [min⁻¹]	Max. airflow [m³/min]	Max. airflow [CFM]	Max. static pressure [Pa]	Max. static pressure [inchH₂O]	SPL [dB (A)]	Operating temperature [˚C]	Expected life [h]
9GA0412G7001	12	7 to 13.8	0.17	2.04	13100	0.36	12.7	192	0.77	42	-20 to +70	40000/60˚C (70000/40˚C)

Rated voltage ····· This is the necessary voltage to drive the fan. E.g.) 12 VDC, 24 VDC, 48 VDC
Operating voltage range ····· The voltage range over which fan operation is guaranteed.
Rated current ····· The current when the fan is operating at rated voltage (at free air).
Rated input ····· The power value when the fan is operating at rated voltage (at free air).
Rated speed ····· The speed when the fan is operating at rated voltage (at free air).
Max. airflow ····· The airflow at 0 Pa static pressure when the fan is operating at rated voltage. (Measured using the double chamber method)
Max. static pressure ····· The static pressure at 0 m^3/min airflow when the fan is operating at rated voltage. (Measured using the double chamber method)
SPL ····· A-weighted sound pressure level (SPL) when the fan operates at the rated speed.
For the measurement method, see the Technical Materials section in the catalog.
Operating temperature ····· The temperature range over which fan operation is guaranteed (Non-condensing).
Expected life
(Wide Temperature Range Fan) ··· Service life hours that 90% of bearings will survive without failing when continuously operated at the rated voltage and 85˚C temperature. Expected life at 40˚C is for reference only.
For more information, please refer to the technical material section.

40×40×28 mm

San Ace 40T 9GT type

General Specifications

- Material ..... Frame: Aluminum, Impeller: Plastic (Flammability: UL 94V-1)
- Expected life ..... See the table below. (L10 life: 90% survival rate for continuous operation in free air at 85°C, rated voltage) Expected life at 40°C is for reference only.
- Motor protection function ..... Locked rotor burnout protection, Reverse polarity protection For details, please refer to p. 608.
- Dielectric strength ..... 50/60 Hz, 500 VAC, for 1 minute (between lead wire conductors and frame)
- Insulation resistance ..... 10 MΩ min. at 500 VDC (between lead wire conductors and frame)
- Sound pressure level (SPL) ..... A-weighted sound pressure level (SPL) at 1 m away from the air inlet.
- Storage temperature ..... -40 to +85°C (Non-condensing)
- Lead wire ..... ⊕Red ⊖Black Sensor Yellow Control Brown
- Mass ..... 55 g

Specifications

The models listed below **have a pulse sensor with PWM control.**

Model no.	Rated voltage [V]	Operating voltage range [V]	PWM duty cycle* [%]	Rated current [A]	Rated input [W]	Rated speed [min⁻¹]	Max. airflow [m³/min]	Max. airflow [CFM]	Max. static pressure [Pa]	Max. static pressure [inchH₂O]	SPL [dB (A)]	Operating temperature [°C]	Expected life [h]
9GT0412P3J001	12	10.2 to 13.8	100	0.31	3.72	11700	0.52	18.4	206	0.827	48	-40 to +85	40000/85°C (162000/40°C)
			30	0.08	0.96	4100	0.18	6.36	25.2	0.1	21		
9GT0424P3J001	24	20.4 to 27.6	100	0.15	3.6	11700	0.52	18.4	206	0.827	48		
			30	0.07	1.68	5700	0.25	8.83	48.9	0.196	29		

PWM frequency is 25 kHz. Models without ratings for 0% PWM duty cycle have zero speed at 0%. When control terminal is open, speed is the same as at 100% duty cycle.

Note 1: Sensor and control options are available for selection. Refer to the table on p. 641.
Note 2: The » mark indicates Short LeadTime Service applicable models. See p. 664 for details.

Airflow - Static Pressure Characteristics / PWM Duty - Speed Characteristics Example

9GT0412P3J001 With pulse sensor with PWM control

PWM duty cycle

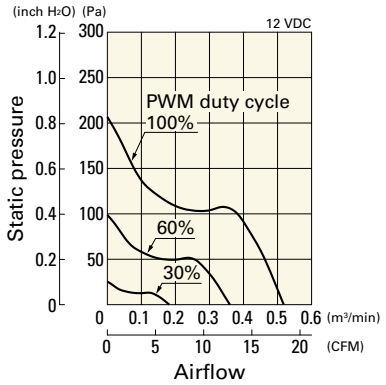

Operating voltage range

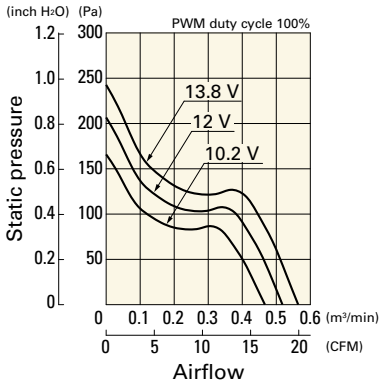

PWM duty - Speed characteristics example

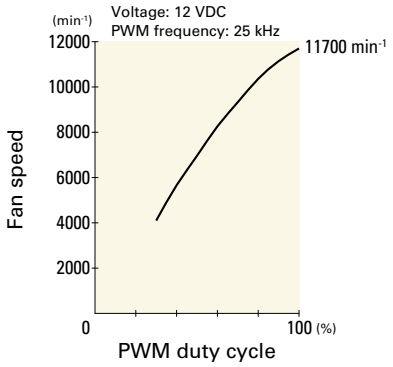

Airflow - Static Pressure Characteristics / PWM Duty - Speed Characteristics Example

9GT0424P3J001 With pulse sensor with PWM control

PWM duty cycle

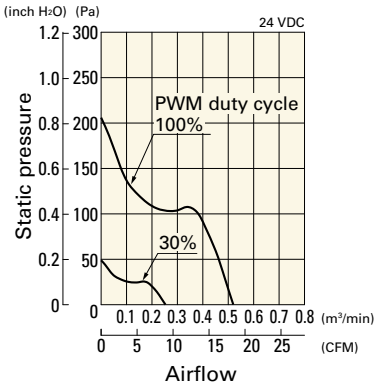

Operating voltage range

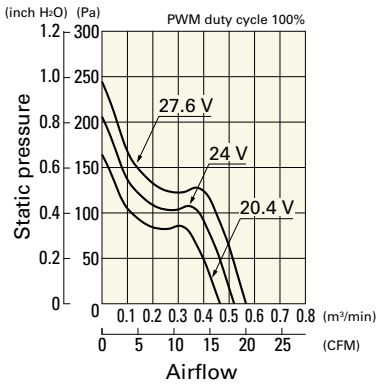

PWM duty - Speed characteristics example

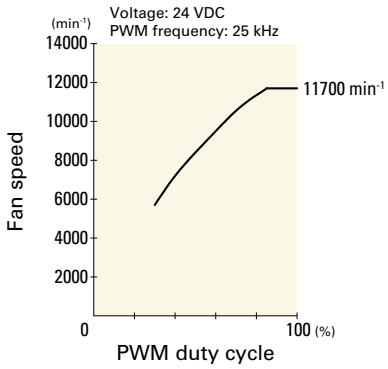

Dimensions (unit: mm)

Screw-mount the fan through both flanges.

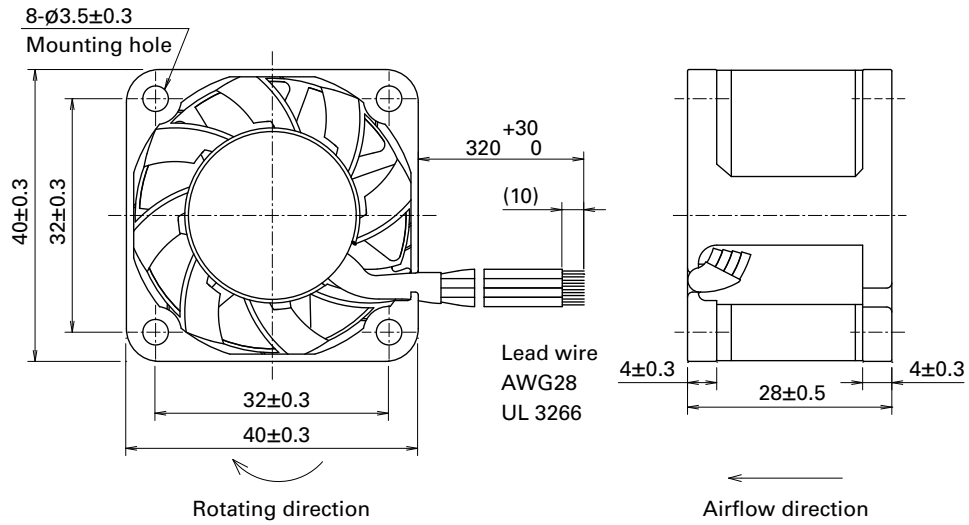

Reference Dimensions of Mounting Holes and Vent Opening (unit: mm)

Inlet side, Outlet side

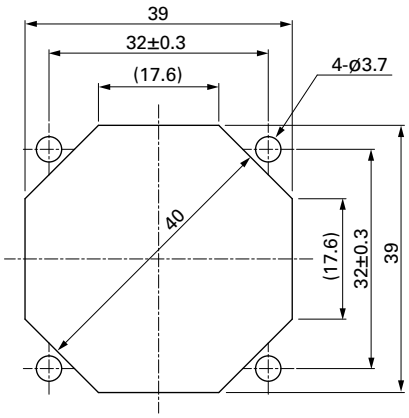

Options

Finger guards page: p. 590

Model no.: 109-059, 109-059H

60×60×25 mm

San Ace 60T 9GT type

General Specifications

- Material ..... Frame: Aluminum, Impeller: Plastic (Flammability: UL 94V-1)
- Expected life ..... See the table below. (L10 life: 90% survival rate for continuous operation in free air at 85°C, rated voltage) Expected life at 40°C is for reference only.
- Motor protection function ..... Locked rotor burnout protection, Reverse polarity protection For details, please refer to p. 608.
- Dielectric strength ..... 50/60 Hz, 500 VAC, for 1 minute (between lead wire conductors and frame)
- Insulation resistance ..... 10 MΩ min. at 500 VDC (between lead wire conductors and frame)
- Sound pressure level (SPL) ..... A-weighted sound pressure level (SPL) at 1 m away from the air inlet.
- Storage temperature ..... -40 to +85°C (Non-condensing)
- Lead wire ..... ⊕Red ⊖Black Sensor Yellow Control Brown
- Mass ..... 100 g

Specifications

The models listed below **have a pulse sensor with PWM control.**

Model no.	Rated voltage [V]	Operating voltage range [V]	PWM duty cycle* [%]	Rated current [A]	Rated input [W]	Rated speed [min⁻¹]	Max. airflow [m³/min]	Max. airflow [CFM]	Max. static pressure [Pa]	Max. static pressure [inchH₂O]	SPL [dB (A)]	Operating temperature [°C]	Expected life [h]
9GT0612P4G001	12	10.2 to 13.8	100	0.56	6.72	10000	1.26	44.5	243	0.97	52	-40 to +85	40000/85°C (162000/40°C)
			30	0.11	1.32	4100	0.52	18.3	42.8	0.17	25		
9GT0624P4G001	24	20.4 to 27.6	100	0.28	6.72	10000	1.26	44.5	243	0.97	52		
			30	0.06	1.44	4100	0.52	18.3	42.8	0.17	25		

PWM frequency is 25 kHz. Models without ratings for 0% PWM duty cycle have zero speed at 0%. When control terminal is open, speed is the same as at 100% duty cycle.

Note 1: Sensor and control options are available for selection. Refer to the table on p. 641.
Note 2: The » mark indicates Short LeadTime Service applicable models. See p. 664 for details.

Airflow - Static Pressure Characteristics / PWM Duty - Speed Characteristics Example

9GT0612P4G001 With pulse sensor with PWM control

PWM duty cycle

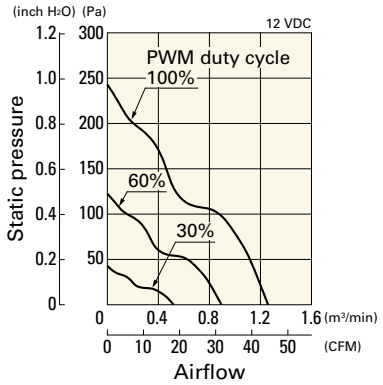

Operating voltage range

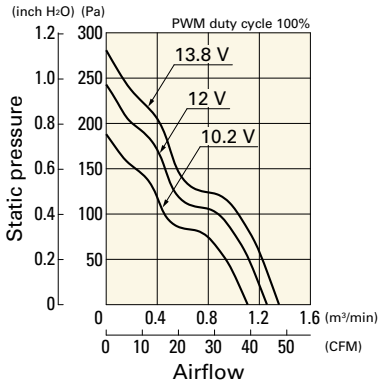

PWM duty - Speed characteristics example

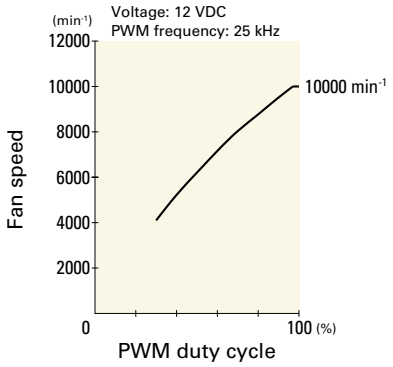

Airflow - Static Pressure Characteristics / PWM Duty - Speed Characteristics Example

9GT0624P4G001 With pulse sensor with PWM control

PWM duty cycle

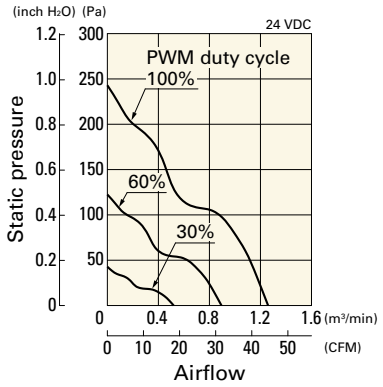

Operating voltage range

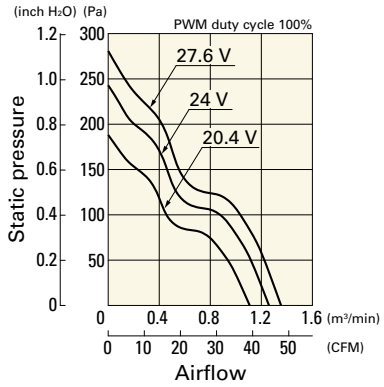

PWM duty - Speed characteristics example

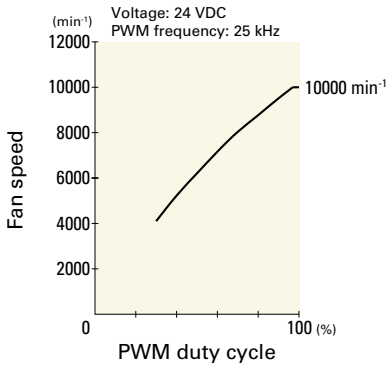

Dimensions (unit: mm)

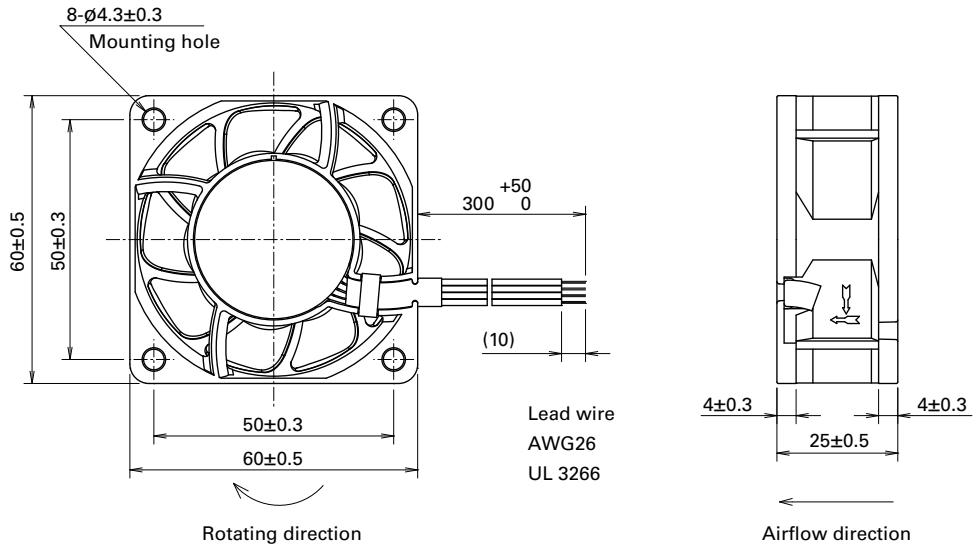

Reference Dimensions of Mounting Holes and Vent Opening (unit: mm)

Inlet side, Outlet side

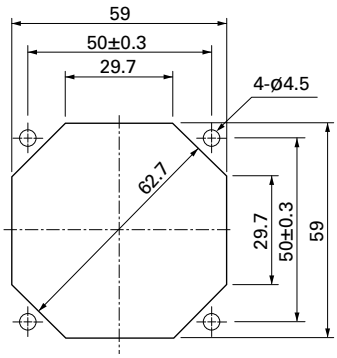

Options

Finger guards page: p. 590

Model no.: 109-139E, 109-139H

80×80×25 mm

San Ace 80T 9GT type

General Specifications

- Material ..... Frame: Aluminum, Impeller: Plastic (Flammability: UL 94V-1)
- Expected life ..... See the table below. (L10 life: 90% survival rate for continuous operation in free air at 85°C, rated voltage) Expected life at 40°C is for reference only.
- Motor protection function ..... Locked rotor burnout protection, Reverse polarity protection For details, please refer to p. 608.
- Dielectric strength ..... 50/60 Hz, 500 VAC, for 1 minute (between lead wire conductors and frame)
- Insulation resistance ..... 10 MΩ min. at 500 VDC (between lead wire conductors and frame)
- Sound pressure level (SPL) ..... A-weighted sound pressure level (SPL) at 1 m away from the air inlet.
- Storage temperature ..... -40 to +85°C (Non-condensing)
- Lead wire ..... ⊕Red ⊖Black Sensor Yellow Control Brown
- Mass ..... 130 g

Specifications

The models listed below **have a pulse sensor with PWM control.**

Model no.	Rated voltage [V]	Operating voltage range [V]	PWM duty cycle* [%]	Rated current [A]	Rated input [W]	Rated speed [min⁻¹]	Max. airflow [m³/min]	Max. airflow [CFM]	Max. static pressure [Pa]	Max. static pressure [inchH₂O]	SPL [dB (A)]	Operating temperature [°C]	Expected life [h]
9GT0812P4S001	12	10.2 to 13.8	100	0.46	5.52	6700	1.86	65.7	143	0.57	46	-40 to +85	40000/85°C (162000/40°C)
			30	0.09	1.08	2650	0.73	25.7	22.3	0.08	26		
9GT0824P4S001	24	20.4 to 27.6	100	0.22	5.28	6700	1.86	65.7	143	0.57	46		
			30	0.05	1.2	2650	0.73	25.7	22.3	0.08	26		

PWM frequency is 25 kHz. Models without ratings for 0% PWM duty cycle have zero speed at 0%. When control terminal is open, speed is the same as at 100% duty cycle.

Note 1: Sensor and control options are available for selection. Refer to the table on p. 641.
Note 2: The mark indicates Short LeadTime Service applicable models. See p. 664 for details.

Airflow - Static Pressure Characteristics / PWM Duty - Speed Characteristics Example

9GT0812P4S001 With pulse sensor with PWM control

PWM duty cycle

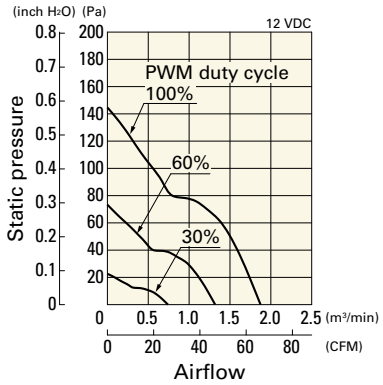

Operating voltage range

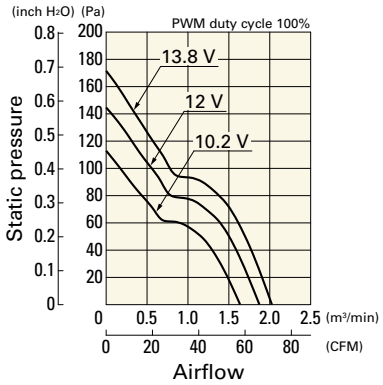

PWM duty - Speed characteristics example

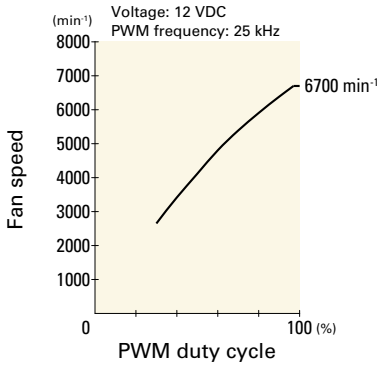

Airflow - Static Pressure Characteristics / PWM Duty - Speed Characteristics Example

9GT0824P4S001 With pulse sensor with PWM control

PWM duty cycle

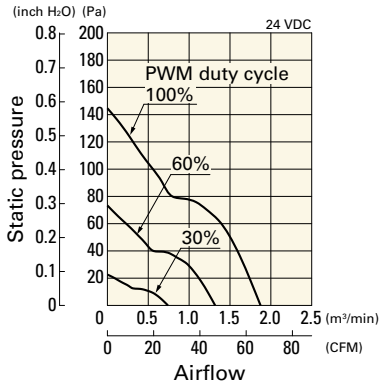

Operating voltage range

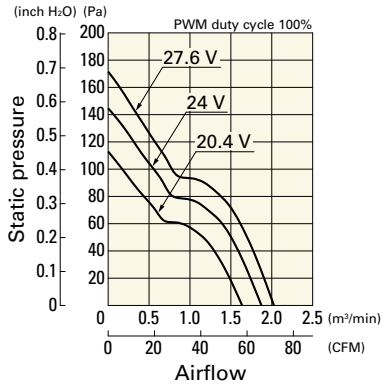

PWM duty - Speed characteristics example

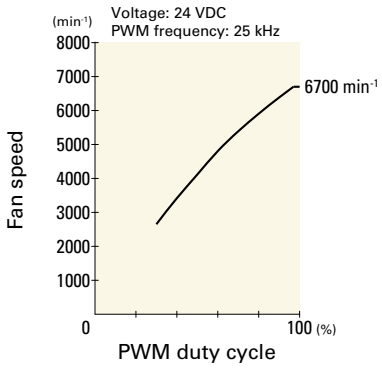

Dimensions (unit: mm)

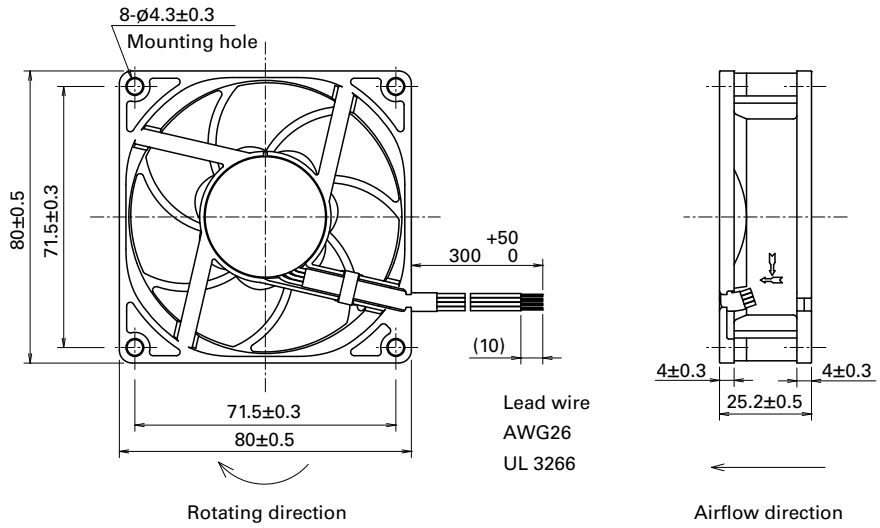

Reference Dimensions of Mounting Holes and Vent Opening (unit: mm)

Inlet side, Outlet side

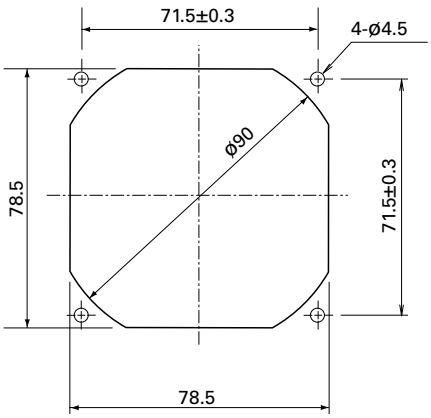

Options

Finger guards page: p. 590

Model no.: 109-049E, 109-049H

92×92×25 mm

San Ace 92T 9GT type

General Specifications

- Material ..... Frame: Aluminum, Impeller: Plastic (Flammability: UL 94V-1)
- Expected life ..... See the table below. (L10 life: 90% survival rate for continuous operation in free air at 85°C, rated voltage) Expected life at 40°C is for reference only.
- Motor protection function ..... Locked rotor burnout protection, Reverse polarity protection For details, please refer to p. 608.
- Dielectric strength ..... 50/60 Hz, 500 VAC, for 1 minute (between lead wire conductors and frame)
- Insulation resistance ..... 10 MΩ min. at 500 VDC (between lead wire conductors and frame)
- Sound pressure level (SPL) ..... A-weighted sound pressure level (SPL) at 1 m away from the air inlet.
- Storage temperature ..... -40 to +85°C (Non-condensing)
- Lead wire ..... ⊕Red ⊖Black Sensor Yellow Control Brown
- Mass ..... 150 g

Specifications

The models listed below **have a pulse sensor with PWM control.**

Model no.	Rated voltage [V]	Operating voltage range [V]	PWM duty cycle* [%]	Rated current [A]	Rated input [W]	Rated speed [min⁻¹]	Max. airflow [m³/min]	Max. airflow [CFM]	Max. static pressure [Pa]	Max. static pressure [inchH₂O]	SPL [dB (A)]	Operating temperature [°C]	Expected life [h]
9GT0912P4J001	12	10.2 to 13.8	100	0.42	5.04	5000	2.2	77.7	105	0.42	44	-40 to +85	40000/85°C (162000/40°C)
			30	0.07	0.84	1850	0.81	28.7	14.3	0.05	18		
9GT0924P4J001	24	20.4 to 27.6	100	0.21	5.04	5000	2.2	77.7	105	0.42	44		
			30	0.05	1.2	1850	0.81	28.7	14.3	0.05	18		

PWM frequency is 25 kHz. Models without ratings for 0% PWM duty cycle have zero speed at 0%. When control terminal is open, speed is the same as at 100% duty cycle.

Note 1: Sensor and control options are available for selection. Refer to the table on p. 641.
Note 2: The mark indicates Short LeadTime Service applicable models. See p. 664 for details.

Airflow - Static Pressure Characteristics / PWM Duty - Speed Characteristics Example

9GT0912P4J001 With pulse sensor with PWM control

PWM duty cycle

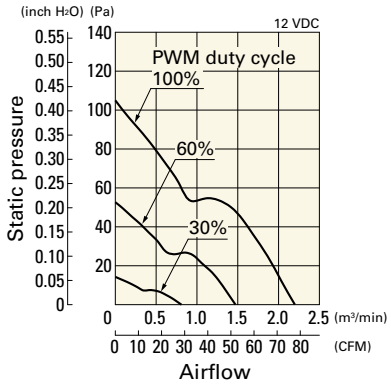

Operating voltage range

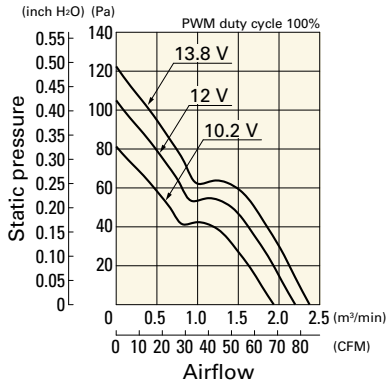

PWM duty - Speed characteristics example

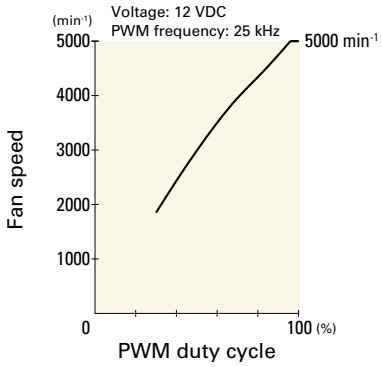

Airflow - Static Pressure Characteristics / PWM Duty - Speed Characteristics Example

9GT0924P4J001 With pulse sensor with PWM control

PWM duty cycle

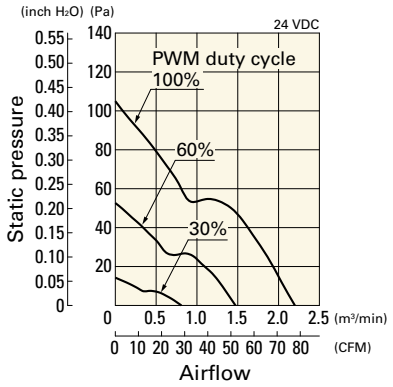

Operating voltage range

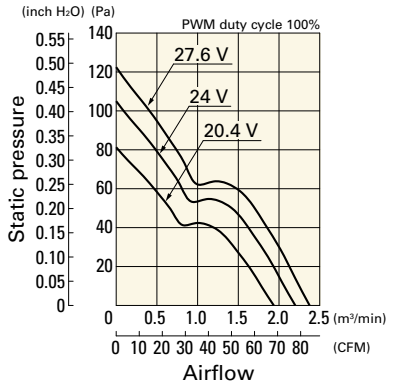

PWM duty - Speed characteristics example

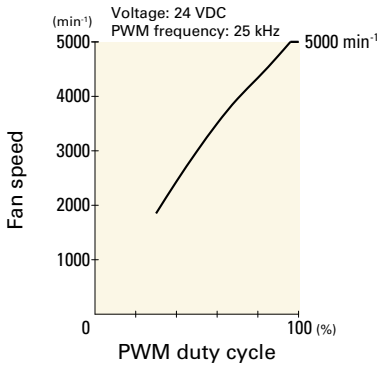

Dimensions (unit: mm)

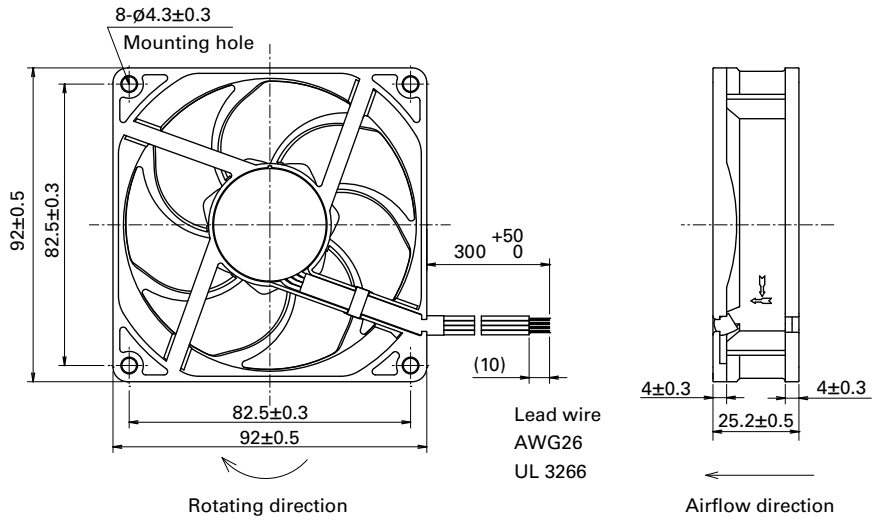

Reference Dimensions of Mounting Holes and Vent Opening (unit: mm)

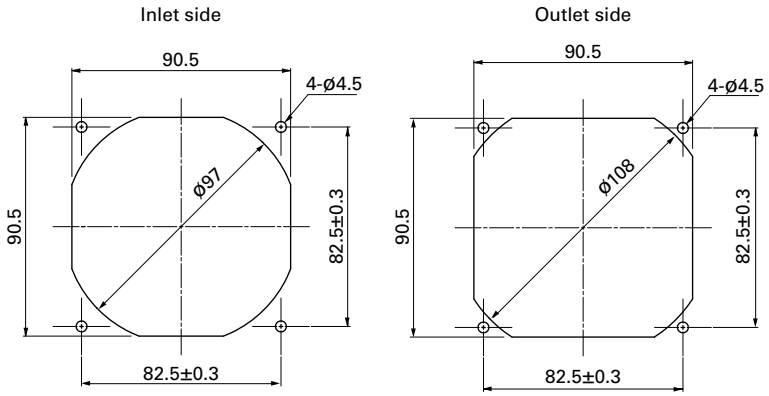

Options

Finger guards	page: p. 591

Model no.: 109-099E, 109-099H

92×92×38 mm

San Ace 92T 9GT type

General Specifications

- Material ..... Frame: Aluminum, Impeller: Plastic (Flammability: UL 94V-1)
- Expected life ..... See the table below. (L10 life: 90% survival rate for continuous operation in free air at 85°C, rated voltage) Expected life at 40°C is for reference only.
- Motor protection function ..... Locked rotor burnout protection, Reverse polarity protection For details, please refer to p. 608.
- Dielectric strength ..... 50/60 Hz, 500 VAC, for 1 minute (between lead wire conductors and frame)
- Insulation resistance ..... 10 MΩ min. at 500 VDC (between lead wire conductors and frame)
- Sound pressure level (SPL) ..... A-weighted sound pressure level (SPL) at 1 m away from the air inlet.
- Storage temperature ..... -40 to +85°C (Non-condensing)
- Lead wire ..... ⊕Red ⊖Black Sensor Yellow Control Brown
- Mass ..... 270 g

Specifications

The models listed below **have a pulse sensor with PWM control.**

Model no.	Rated voltage [V]	Operating voltage range [V]	PWM duty cycle* [%]	Rated current [A]	Rated input [W]	Rated speed [min⁻¹]	Max. airflow [m³/min]	Max. airflow [CFM]	Max. static pressure [Pa]	Max. static pressure [inchH₂O]	SPL [dB (A)]	Operating temperature [°C]	Expected life [h]
9GT0912P1M001	12	10.2 to 13.8	100	1.5	18.0	8100	3.3	116.6	315	1.26	58	-40 to +85	40000/85°C (162000/40°C)
			30	0.3	3.6	3750	1.5	53.0	72.0	0.29	37		
9GT0924P1M001	24	20.4 to 27.6	100	0.75	18.0	8100	3.3	116.6	315	1.26	58		
			30	0.15	3.6	3750	1.5	53.0	72.0	0.29	37		

PWM frequency is 25 kHz. Models without ratings for 0% PWM duty cycle have zero speed at 0%. When control terminal is open, speed is the same as at 100% duty cycle.

Note 1: Sensor and control options are available for selection. Refer to the table on p. 641.
Note 2: The mark indicates Short LeadTime Service applicable models. See p. 664 for details.

Airflow - Static Pressure Characteristics / PWM Duty - Speed Characteristics Example

9GT0912P1M001 With pulse sensor with PWM control

PWM duty cycle

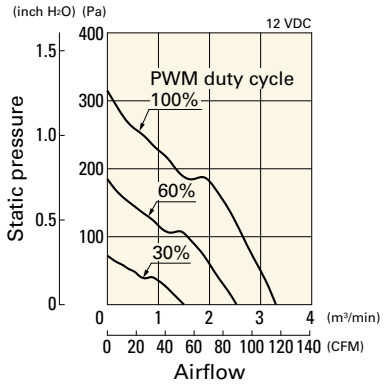

Operating voltage range

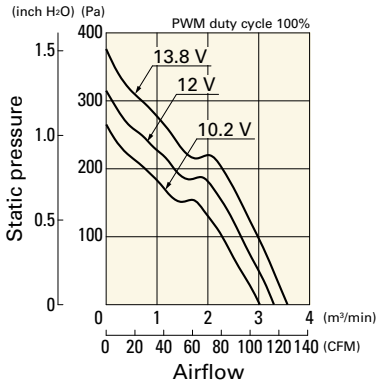

PWM duty - Speed characteristics example

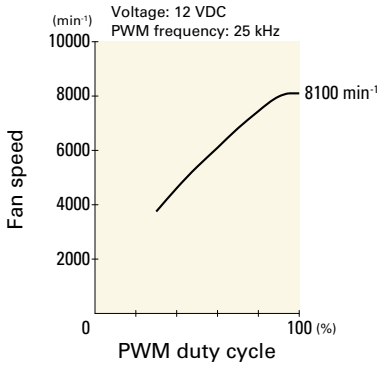

Airflow - Static Pressure Characteristics / PWM Duty - Speed Characteristics Example

9GT0924P1M001 With pulse sensor with PWM control

PWM duty cycle

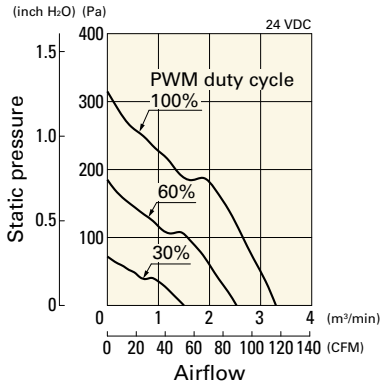

Operating voltage range

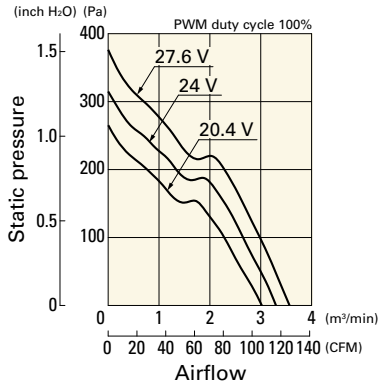

PWM duty - Speed characteristics example

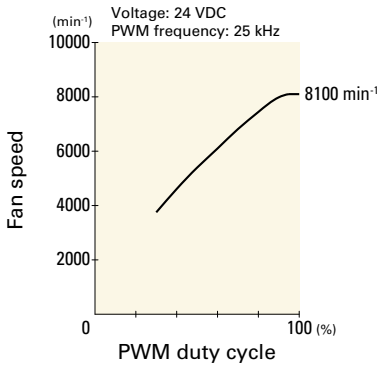

Dimensions (unit: mm)

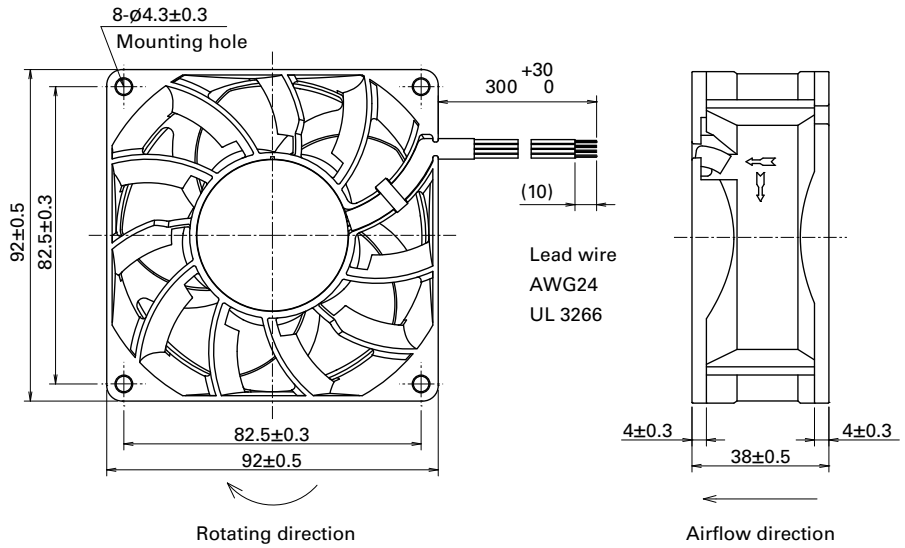

Reference Dimensions of Mounting Holes and Vent Opening (unit: mm)

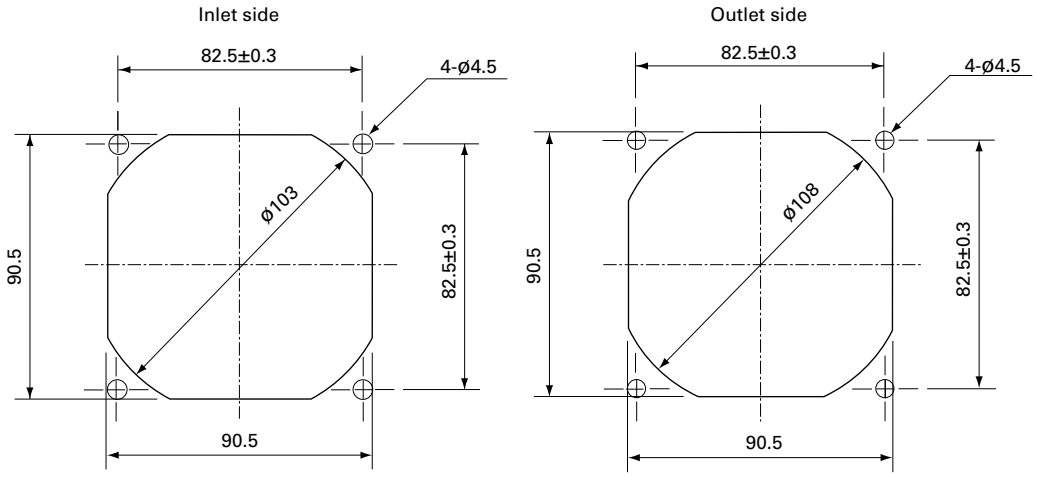

Options

Finger guards page: p. 591

Model no.: 109-099E, 109-099H

120×120×38 mm

San Ace 120T 9GT type

General Specifications

- Material ..... Frame: Aluminum, Impeller: Plastic (Flammability: UL 94V-1)
- Expected life ..... See the table below. (L10 life: 90% survival rate for continuous operation in free air at 85°C, rated voltage) Expected life at 40°C is for reference only.
- Motor protection function ..... Locked rotor burnout protection, Reverse polarity protection For details, please refer to p. 608.
- Dielectric strength ..... 50/60 Hz, 500 VAC, for 1 minute (between lead wire conductors and frame)
- Insulation resistance ..... 10 MΩ min. at 500 VDC (between lead wire conductors and frame)
- Sound pressure level (SPL) ..... A-weighted sound pressure level (SPL) at 1 m away from the air inlet.
- Storage temperature ..... -40 to +85°C (Non-condensing)
- Lead wire ..... ⊕Red ⊖Black Sensor Yellow Control Brown
- Mass ..... 420 g

Specifications

The models listed below **have a pulse sensor with PWM control.**

Model no.	Rated voltage [V]	Operating voltage range [V]	PWM duty cycle* [%]	Rated current [A]	Rated input [W]	Rated speed [min⁻¹]	Max. airflow [m³/min]	Max. airflow [CFM]	Max. static pressure [Pa]	Max. static pressure [inchH₂O]	SPL [dB (A)]	Operating temperature [°C]	Expected life [h]
9GT1212P1S001	12	9.0 to 13.8	100	2.2	26.4	5600	6.0	211.8	270	1.08	58	-40 to +85	40000/85°C (162000/40°C)
			35	0.48	5.76	2900	3.0	106.0	85.6	0.34	41		
9GT1224P1S001	24	18.0 to 27.6	100	1.1	26.4	5600	6.0	211.8	270	1.08	58		
			35	0.24	5.76	2900	3.0	106.0	85.6	0.34	41		

PWM frequency is 25 kHz. Models without ratings for 0% PWM duty cycle have zero speed at 0%. When control terminal is open, speed is the same as at 100% duty cycle.

Note 1: Sensor and control options are available for selection. Refer to the table on p. 641.
Note 2: The » mark indicates Short LeadTime Service applicable models. See p. 664 for details.

Airflow - Static Pressure Characteristics / PWM Duty - Speed Characteristics Example

9GT1212P1S001 With pulse sensor with PWM control

PWM duty cycle

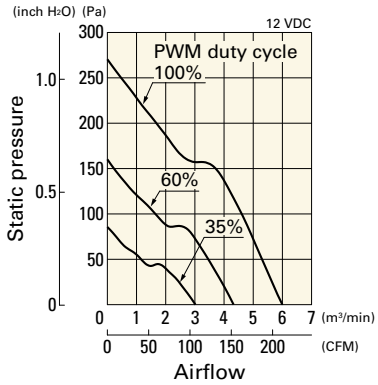

Operating voltage range

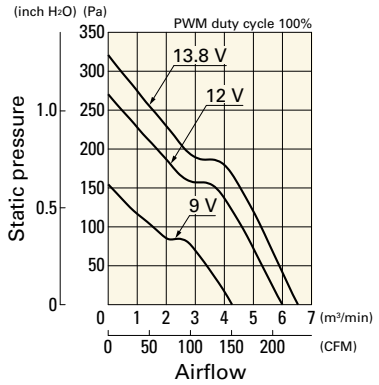

PWM duty - Speed characteristics example

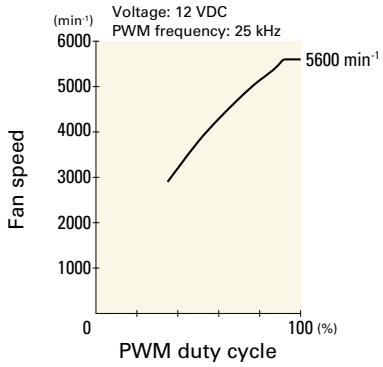

Airflow - Static Pressure Characteristics / PWM Duty - Speed Characteristics Example

9GT1224P1S001 With pulse sensor with PWM control

PWM duty cycle

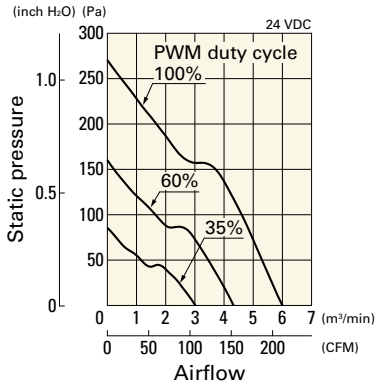

Operating voltage range

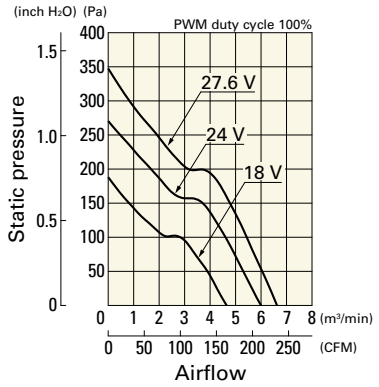

PWM duty - Speed characteristics example

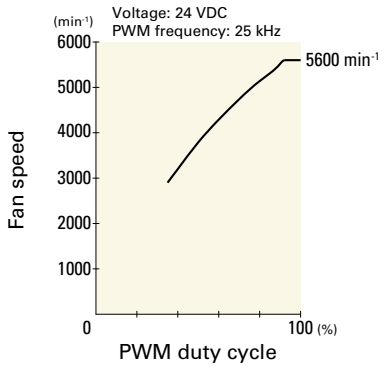

Dimensions (unit: mm)

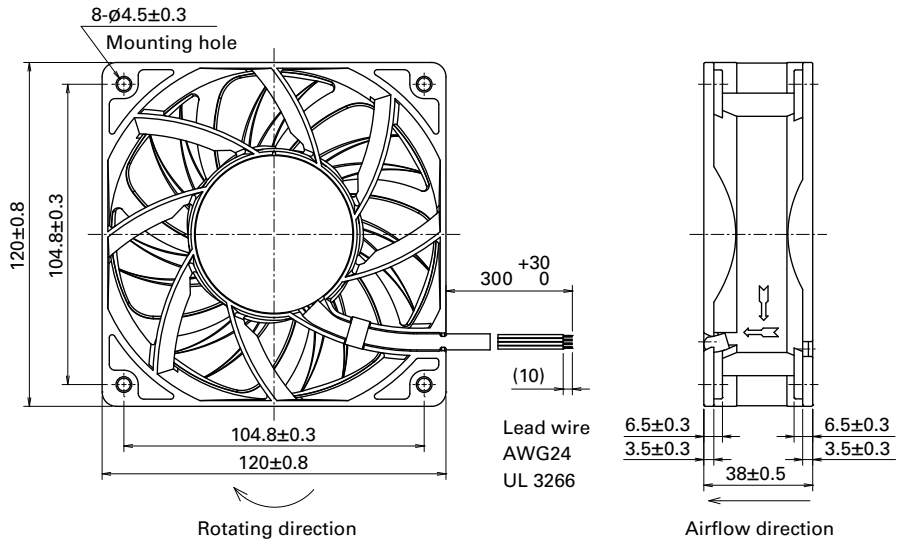

Reference Dimensions of Mounting Holes and Vent Opening (unit: mm)

Inlet side, Outlet side

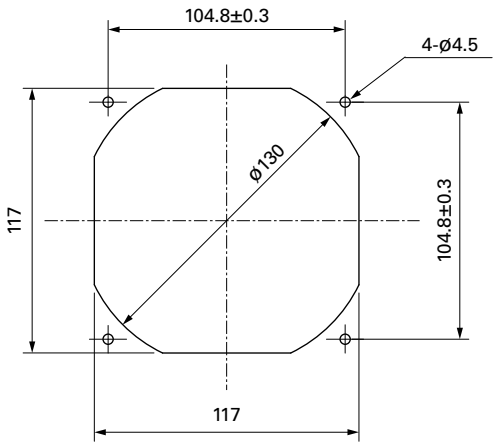

Options

Finger guards page: p. 591

Model no.: 109-019E, 109-019K

G Proof Fan

These fans are suitable for cooling CT scanners and other devices subject to high G-force or vibration.

Model Numbering System

Not every combination of the following codes or characters is available. Contact us for an available combination.

9GP	12	24	P	1	G	001
Type name	Frame size	Voltage	PWM control	Frame thickness	Speed code	Individual customer's spec (3 digits)

Type name	9GP
Frame size (mm)	12 57 120×120 ø172×150 (sidecut)
Voltage (V)	24 48 24 48
Frame thickness (mm)	1 5 38 51
Speed code	G H

How to Read Specifications (DC fan)

The following is a sample. See respective product pages for detailed information.

Model no.	Rated voltage [V]	Operating voltage range [V]	Rated current [A]	Rated input [W]	Rated speed [min⁻¹]	Max. airflow [m³/min]	Max. airflow [CFM]	Max. static pressure [Pa]	Max. static pressure [inchH₂O]	SPL [dB (A)]	Operating temperature [°C]	Expected life [h]
9GA0412G7001	12	7 to 13.8	0.17	2.04	13100	0.36	12.7	192	0.77	42	-20 to +70	40000/60°C (70000/40°C)

Rated voltage ····· This is the necessary voltage to drive the fan. E.g.) 12 VDC, 24 VDC, 48 VDC
Operating voltage range ····· The voltage range over which fan operation is guaranteed.
Rated current ····· The current when the fan is operating at rated voltage (at free air).
Rated input ····· The power value when the fan is operating at rated voltage (at free air).
Rated speed ····· The speed when the fan is operating at rated voltage (at free air).
Max. airflow ····· The airflow at 0 Pa static pressure when the fan is operating at rated voltage. (Measured using the double chamber method)
Max. static pressure ····· The static pressure at 0 m^3/min airflow when the fan is operating at rated voltage. (Measured using the double chamber method)
SPL ····· A-weighted sound pressure level (SPL) when the fan operates at the rated speed.
For the measurement method, see the Technical Materials section in the catalog.
Operating temperature ····· The temperature range over which fan operation is guaranteed (Non-condensing).
Expected life ····· Service life hours that 90% of bearings will survive without failing when continuously operated at the rated voltage and 60°C temperature. Expected life at 40°C is for reference only.
For more information, please refer to the technical material section.

120×120×38 mm

San Ace 120GP 9GP type

General Specifications

- Material ..... Frame: Aluminum (Black coating), Impeller: Plastic (Flammability: UL 94V-1)
- Expected life ..... See the table below. (L10 life: 90% survival rate for continuous operation in free air at 60˚C, rated voltage) Expected life at 40°C is for reference only.
- Motor protection function ..... Locked rotor burnout protection, Reverse polarity protection For details, please refer to p. 608.
- Dielectric strength ..... 50/60 Hz, 500 VAC, for 1 minute (between lead wire conductors and frame)
- Insulation resistance ..... 10 MΩ min. at 500 VDC (between lead wire conductors and frame)
- Sound pressure level (SPL) ..... A-weighted sound pressure level (SPL) at 1 m away from the air inlet.
- Storage temperature ..... -30 to +70˚C (Non-condensing)
- Lead wire ..... ⊕Red ⊖Black Sensor Yellow Control Brown
- Mass ..... 440 g
- G-force tolerance ..... 735 m/s^2 (75 G) for 1,000 h (Measured with our G-force testing machine.)

Specifications

The models listed below **have a pulse sensor with PWM control.**

Model no.	Rated voltage [V]	Operating voltage range [V]	PWM duty cycle* [%]	Rated current [A]	Rated input [W]	Rated speed [min^{-1}]	Max. airflow [m³/min]	Max. airflow [CFM]	Max. static pressure [Pa]	Max. static pressure [inchH₂O]	SPL [dB (A)]	Operating temperature [˚C]	Expected life [h]
9GP1224P1G001	24	15 to 30	100	1.6	38.4	6550	7.0	247	370	1.48	62	-20 to +70	40000/60˚C (70000/40˚C)
			20	0.12	2.88	2000	2.13	75.2	34.4	0.13	36		
9GP1248P1G001	48	36 to 60	100	0.8	38.4	6550	7.0	247	370	1.48	62		
			20	0.08	3.84	2000	2.13	75.2	34.4	0.13	36		

PWM frequency is 25 kHz. Models without ratings for 0% PWM duty cycle have zero speed at 0%. When control terminal is open, speed is the same as at 100% duty cycle.

Note 1: Sensor and control options are available for selection. Refer to the table on p. 641.
Note 2: The » mark indicates Short LeadTime Service applicable models. See p. 664 for details.

Airflow - Static Pressure Characteristics / PWM Duty - Speed Characteristics Example

9GP1224P1G001 With pulse sensor with PWM control

PWM duty cycle

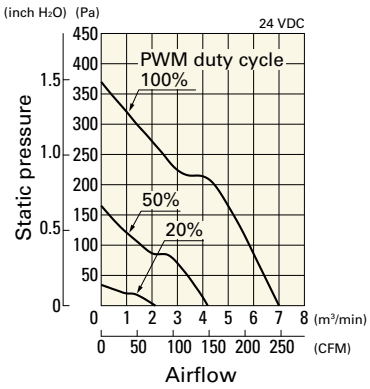

Operating voltage range

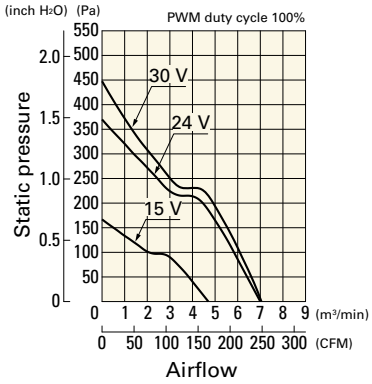

PWM duty - Speed characteristics example

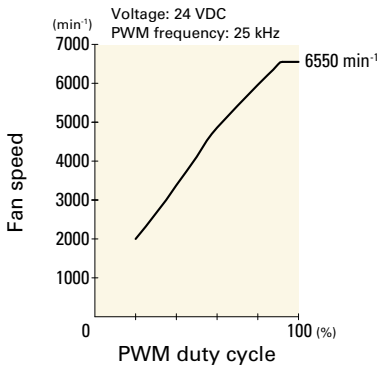

Airflow - Static Pressure Characteristics / PWM Duty - Speed Characteristics Example

9GP1248P1G001 With pulse sensor with PWM control

PWM duty cycle

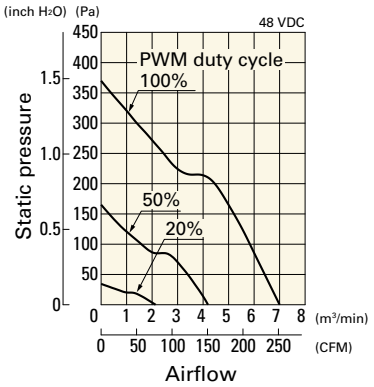

Operating voltage range

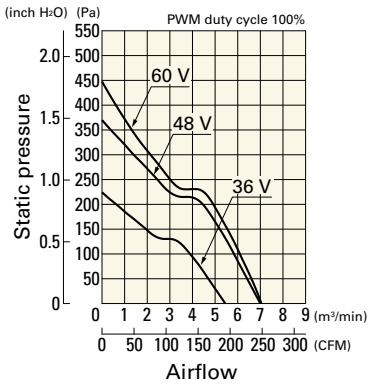

PWM duty - Speed characteristics example

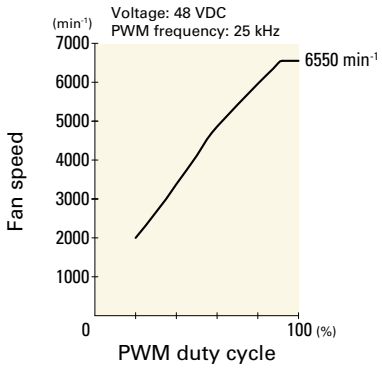

Dimensions (unit: mm)

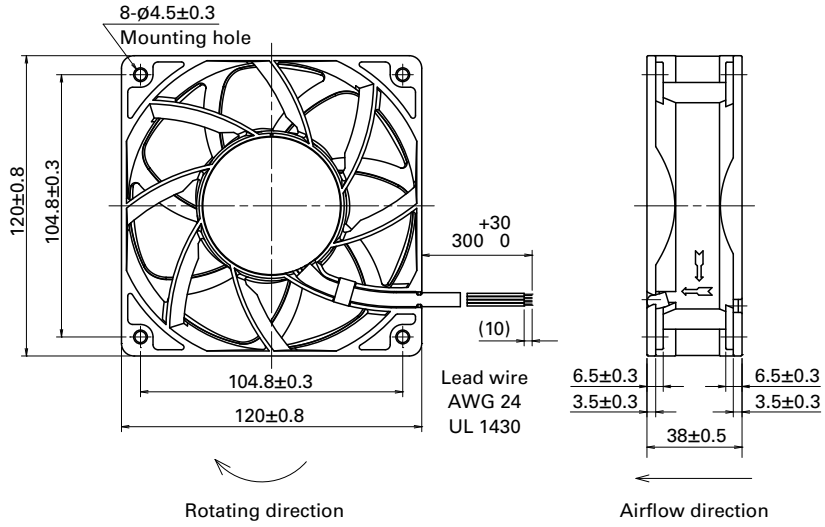

Reference Dimensions of Mounting Holes and Vent Opening (unit: mm)

Inlet side, Outlet side

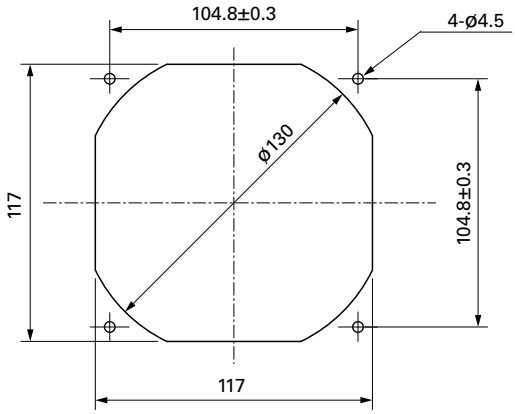

Options

Finger guards	page: p. 591

Model no.: 109-019E, 109-019K

Resin finger guards	page: p. 597

Model no.: 109-1000G

Resin filter kits	page: p. 598

Model no.: 109-1000F13 (13PPI), 109-1000F20 (20PPI),
109-1000F30 (30PPI), 109-1000F40 (40PPI)

ø172×150×51 mm

San Ace 172GP 9GP type

Sidecut type

General Specifications

- Material ..... Frame: Aluminum (Black coating), Impeller: Plastic (Flammability: UL 94V-1)
- Expected life ..... See the table below. (L10 life: 90% survival rate for continuous operation in free air at 60˚C, rated voltage) Expected life at 40°C is for reference only.
- Motor protection function ..... Locked rotor burnout protection, Reverse polarity protection For details, please refer to p. 608.
- Dielectric strength ..... 50/60 Hz, 500 VAC, for 1 minute (between lead wire conductors and frame)
- Insulation resistance ..... 10 MΩ min. at 500 VDC (between lead wire conductors and frame)
- Sound pressure level (SPL) ..... A-weighted sound pressure level (SPL) at 1 m away from the air inlet.
- Storage temperature ..... -30 to +70˚C (Non-condensing)
- Lead wire ..... ⊕Red ⊖Black Sensor Yellow Control Brown
- Mass ..... 880 g
- G-force tolerance ..... 735 m/s^2 (75 G) for 1,000 h (Measured with our G-force testing machine.)

Specifications

The models listed below **have a pulse sensor with PWM control.**

Model no.	Rated voltage [V]	Operating voltage range [V]	PWM duty cycle* [%]	Rated current [A]	Rated input [W]	Rated speed [min^{-1}]	Max. airflow [m³/min]	Max. airflow [CFM]	Max. static pressure [Pa]	Max. static pressure [inchH₂O]	SPL [dB (A)]	Operating temperature [˚C]	Expected life [h]
9GP5724P5H001	24	16 to 30	100	5.0	120	8000	12.3	434	1000	4.02	77	-20 to +70	40000/60˚C (70000/40˚C)
			20	0.5	12.0	3000	4.6	162	175	0.7	51		
9GP5748P5G001	48	36 to 72	100	5.0	240	10500	16.1	568	1600	6.43	83		
			20	0.41	19.7	3700	5.6	198	250	1.01	57		

PWM frequency is 25 kHz. Models without ratings for 0% PWM duty cycle have zero speed at 0%. When control terminal is open, speed is the same as at 100% duty cycle.

Note: The » mark indicates Short Lead Time Service applicable models. See p. 664 for details.

Airflow - Static Pressure Characteristics / PWM Duty - Speed Characteristics Example

9GP5724P5H001 With pulse sensor with PWM control

PWM duty cycle

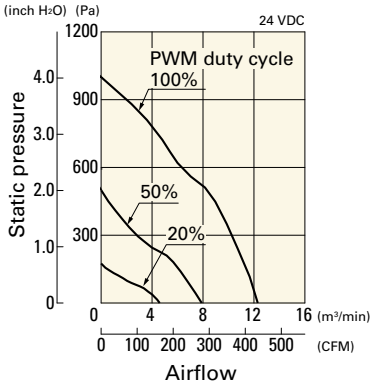

Operating voltage range

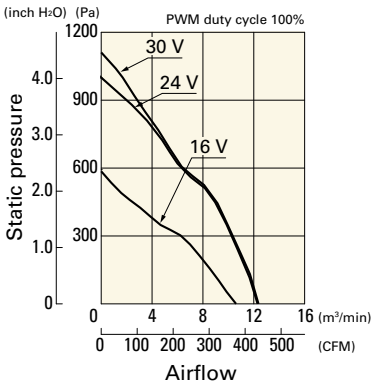

PWM duty - Speed characteristics example

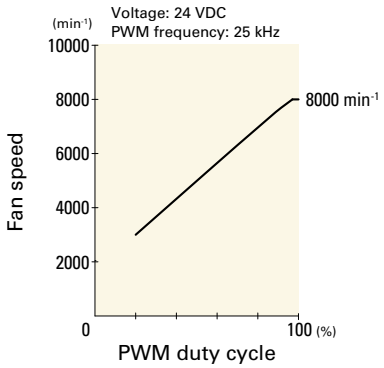

Airflow - Static Pressure Characteristics / PWM Duty - Speed Characteristics Example

9GP5748P5G001 With pulse sensor with PWM control

PWM duty cycle

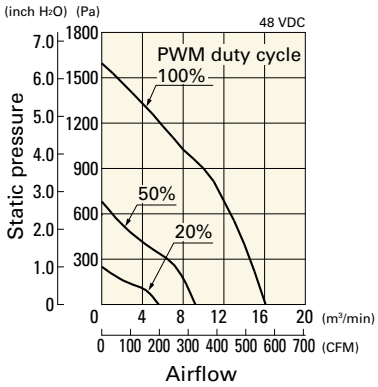

Operating voltage range

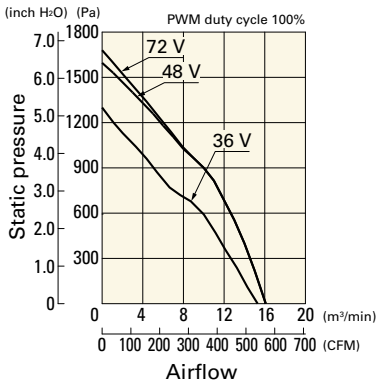

PWM duty - Speed characteristics example

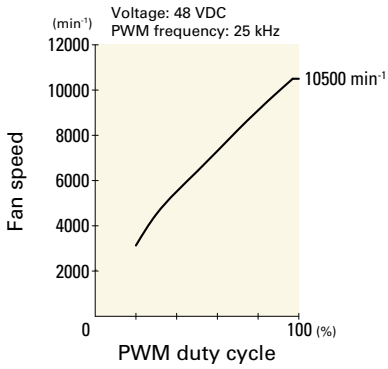

Dimensions (unit: mm)

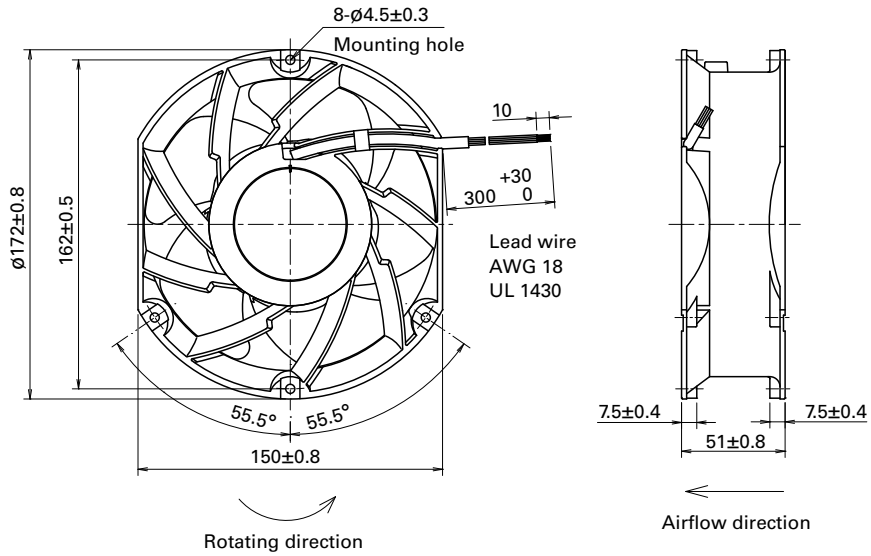

Reference Dimensions of Mounting Holes and Vent Opening (unit: mm)

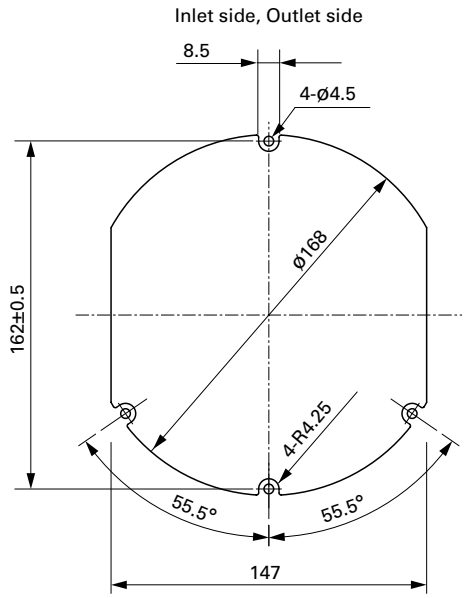

Options

Finger guards page: p. 592

Model no.: 109-1155

Centrifugal Fan

Cooling fan blows air in a centrifugal course. It features high static pressure.
Related product: Splash Proof Centrifugal Fan p. 315

Model Numbering System

Not every combination of the following codes or characters is available. Contact us for an available combination.

9T	M	48	P	4	H	01
Type name	Impeller size	Voltage	PWM control	Thickness	Speed code	Individual customer's spec (2 to 3 digits)

Bracket-mounted Centrifugal Fan

9B1T	P	48	P	0	H	001
Type name	Impeller size	Voltage	PWM control	Thickness	Speed code	Individual customer's spec (3 digits)

Type name	9B1T 9T
Impeller size (mm)	D ø70, G, GA ø175, J ø133, M ø100, N ø150, P ø221, S ø225
Voltage (V)	12 12, 24 24, 48 48
Thickness (mm)	0 69 min., 99, 119; 1 35; 4 25; 6 20
Speed code	H G etc.

How to Read Specifications (DC fan)

The following is a sample. See respective product pages for detailed information.

Model no.	Rated voltage [V]	Operating voltage range [V]	Rated current [A]	Rated input [W]	Rated speed [min^{-1}]	Max. airflow [m^3/min]	Max. airflow [CFM]	Max. static pressure [Pa]	Max. static pressure [inchH_2O]	SPL [dB (A)]	Operating temperature [°C]	Expected life [h]
9GA0412G7001	12	7 to 13.8	0.17	2.04	13100	0.36	12.7	192	0.77	42	-20 to +70	40000/60°C (70000/40°C)

Rated voltage ····· This is the necessary voltage to drive the fan. E.g.) 12 VDC, 24 VDC, 48 VDC
Operating voltage range ····· The voltage range over which fan operation is guaranteed.
Rated current ····· The current when the fan is operating at rated voltage (at free air).
Rated input ····· The power value when the fan is operating at rated voltage (at free air).
Rated speed ····· The speed when the fan is operating at rated voltage (at free air).
Max. airflow ····· The airflow at 0 Pa static pressure when the fan is operating at rated voltage. (Measured using the double chamber method)
Max. static pressure ····· The static pressure at 0 m^3/min airflow when the fan is operating at rated voltage. (Measured using the double chamber method)
SPL ····· A-weighted sound pressure level (SPL) when the fan operates at the rated speed.
For the measurement method, see the Technical Materials section in the catalog.
Operating temperature ····· The temperature range over which fan operation is guaranteed (Non-condensing).
Expected life ····· Service life hours that 90% of bearings will survive without failing when continuously operated at the rated voltage and 60°C temperature. Expected life at 40°C is for reference only.
For more information, please refer to the technical material section.

Errata sheet

ø70×20 mm

San Ace C70 9TD type

General Specifications

- Material ..... Motor case: Aluminum, Impeller: Plastic (Flammability: UL 94V-0)
- Expected life ..... See the table below. (L10 life: 90% survival rate for continuous operation in free air at 60˚C, rated voltage) Expected life at 40°C is for reference only.
- Motor protection function ..... Locked rotor burnout protection, Reverse polarity protection For details, please refer to p. 608.
- Dielectric strength ..... 50/60 Hz, 500 VAC, for 1 minute (between lead wire conductors and motor case)
- Insulation resistance ..... 10 MΩ min. at 500 VDC (between lead wire conductors and motor case)
- Sound pressure level (SPL) ..... A-weighted sound pressure level (SPL) at 1 m away from the air inlet.
- Storage temperature ..... -30 to +70˚C (Non-condensing)
- Lead wire ..... ⊕Red ⊖Black Sensor Yellow Control Brown
- Mass ..... 90 g

Specifications

When the optional inlet nozzle (109-1106) is mounted.

The models listed below **have ribs and a pulse sensor with PWM control.**

Model no.	Rated voltage [V]	Operating voltage range [V]	PWM duty cycle* [%]	Rated current [A]	Rated input [W]	Rated speed [min⁻¹]	Max. airflow [m³/min]	Max. airflow [CFM]	Max. static pressure [Pa]	Max. static pressure [inchH₂O]	SPL [dB (A)]	Operating temperature [˚C]	Expected life [h]
9TD12P6G001	12	10.8 to 13.2	100	1.0	12	9200	1.13	39.9	560	2.24	61	-20 to +70	40000/60˚C (70000/40˚C)
			20	0.1	1.2	2000	0.23	8.1	25	0.10	30		

PWM frequency is 25 kHz. Models without ratings for 0% PWM duty cycle have zero speed at 0%. When control terminal is open, speed is the same as at 100% duty cycle.

Note 1: Max input is 12.6 W at rated voltage.
Note 2: The » mark indicates Short LeadTime Service applicable models. See p. 664 for details.

Airflow - Static Pressure Characteristics / PWM Duty - Speed Characteristics Example

9TD12P6G001 With pulse sensor with PWM control

PWM duty cycle

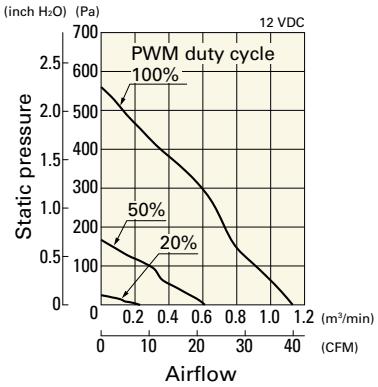

Operating voltage range

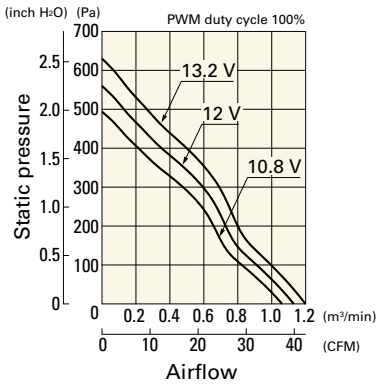

PWM duty - Speed characteristics example

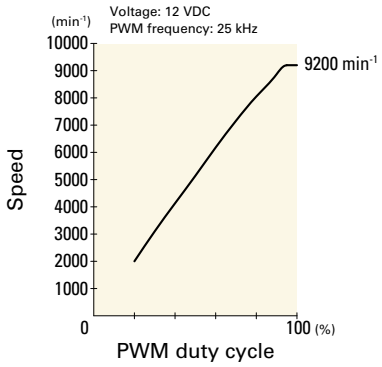

Dimensions (unit: mm)

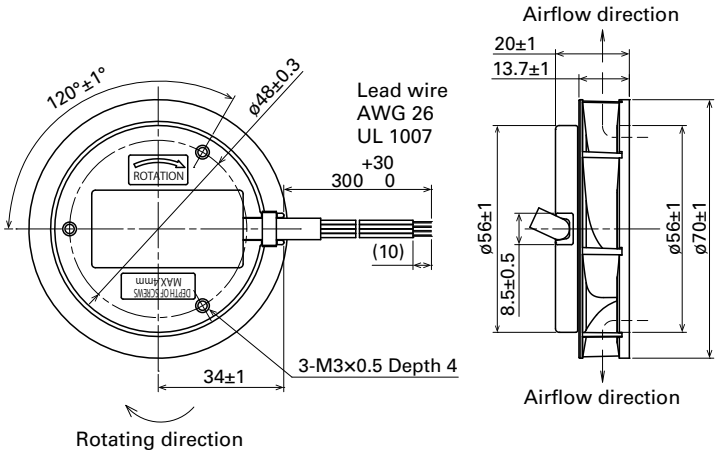

Reference Dimensions of Mounting Holes and Vent Opening (unit: mm)

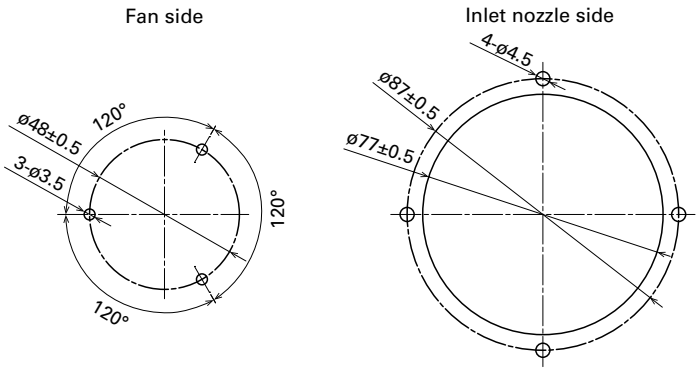

Reference Diagram for Mounting (unit: mm)

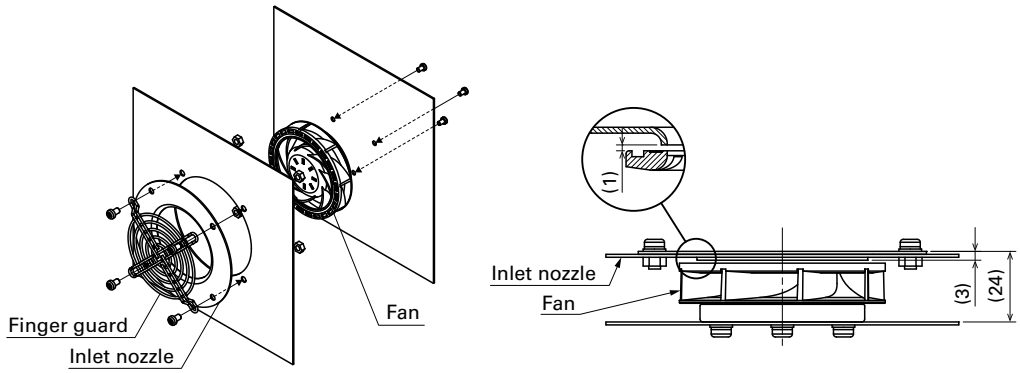

Options

Finger guards	page: p. 590
Model no.: 109-1128	

Inlet nozzle	page: p. 595
Model no.: 109-1106	

Errata sheet

Centrifugal Fan

ø100×25 mm

San Ace C100 9TM type

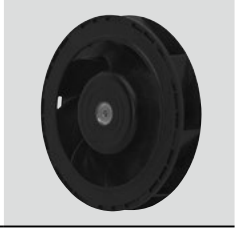

General Specifications

- Material ..... Motor case: Aluminum, Impeller: Plastic (Flammability: UL 94V-0)
- Expected life ..... See the table below. (L10 life: 90% survival rate for continuous operation in free air at 60˚C, rated voltage) Expected life at 40°C is for reference only.
- Motor protection function ..... Locked rotor burnout protection, Reverse polarity protection For details, please refer to p. 608.
- Dielectric strength ..... 50/60 Hz, 500 VAC, for 1 minute (between lead wire conductors and motor case)
- Insulation resistance ..... 10 MΩ min. at 500 VDC (between lead wire conductors and motor case)
- Sound pressure level (SPL) ..... A-weighted sound pressure level (SPL) at 1 m away from the air inlet.
- Storage temperature ..... -30 to +70˚C (Non-condensing)
- Lead wire ..... ⊕Red ⊖Black Sensor Yellow Control Brown
- Mass ..... 150 g

Specifications

When the optional inlet nozzle (109-1080) is mounted.

The models listed below **have ribs and a pulse sensor with PWM control.**

Model no.	Rated voltage [V]	Operating voltage range [V]	PWM duty cycle* [%]	Rated current [A]	Rated input [W]	Rated speed [min⁻¹]	Max. airflow [m³/min]	Max. airflow [CFM]	Max. static pressure [Pa]	Max. static pressure [inchH₂O]	SPL [dB (A)]	Operating temperature [˚C]	Expected life [h]
9TM24P4H01	24	21.6 to 26.4	100	0.44	10.56	6400	1.77	62.5	560	2.25	60	-20 to +70	40000/60˚C (70000/40˚C)
			0	0.05	1.2	2000	0.51	18.0	48	0.19	34		
9TM48P4H01	48	36 to 60	100	0.22	10.56	6400	1.77	62.5	560	2.25	60		
			0	0.04	1.92	2000	0.51	18.0	48	0.19	34		

PWM frequency is 25 kHz. Models without ratings for 0% PWM duty cycle have zero speed at 0%. When control terminal is open, speed is the same as at 100% duty cycle.

Note 1: Max input is 14 W at rated voltage.
Note 2: Sensor and control options are available for selection. Refer to the table on p. 649.
Note 3: The » mark indicates Short LeadTime Service applicable models. See p. 664 for details.

Airflow - Static Pressure Characteristics / PWM Duty - Speed Characteristics Example

9TM24P4H01 With pulse sensor with PWM control

PWM duty cycle

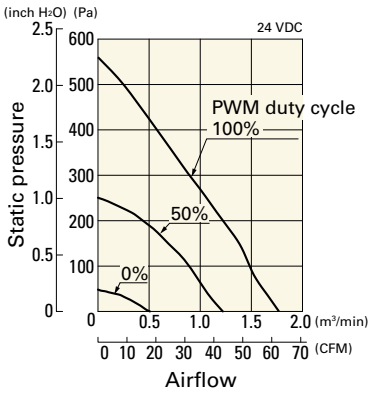

Operating voltage range

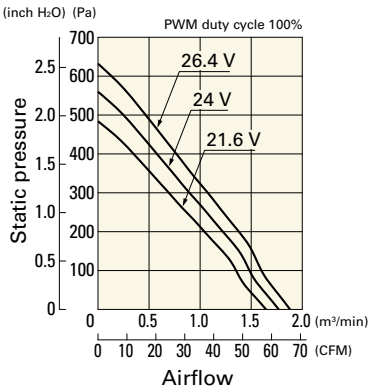

PWM duty - Speed characteristics example

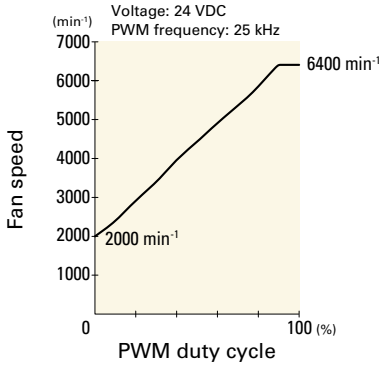

Airflow - Static Pressure Characteristics / PWM Duty - Speed Characteristics Example

9TM48P4H01 With pulse sensor with PWM control

PWM duty cycle

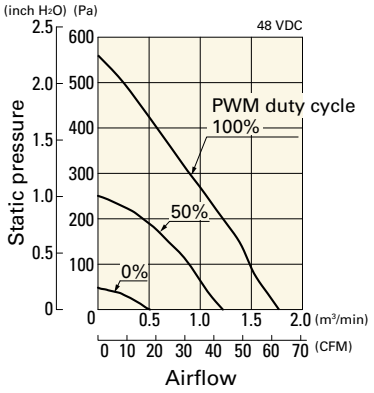

Operating voltage range

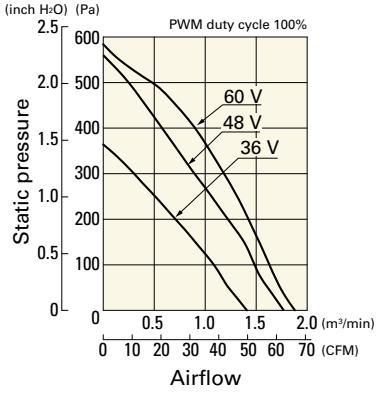

PWM duty - Speed characteristics example

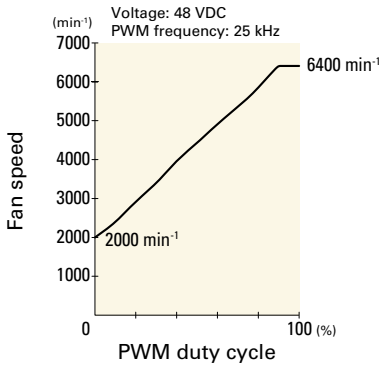

Dimensions (unit: mm)

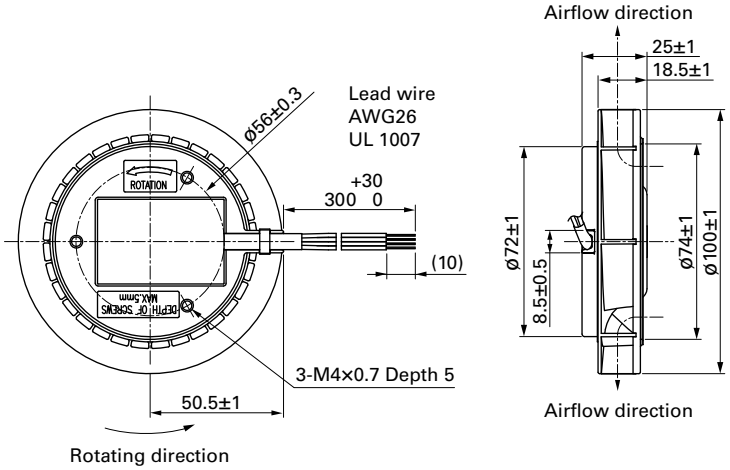

Reference Dimensions of Mounting Holes and Vent Opening (unit: mm)

Fan side

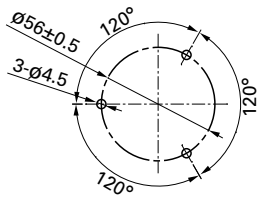

Inlet nozzle side

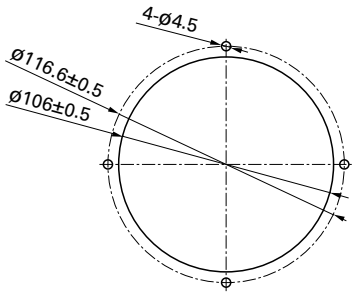

Reference Diagram for Mounting (unit: mm)

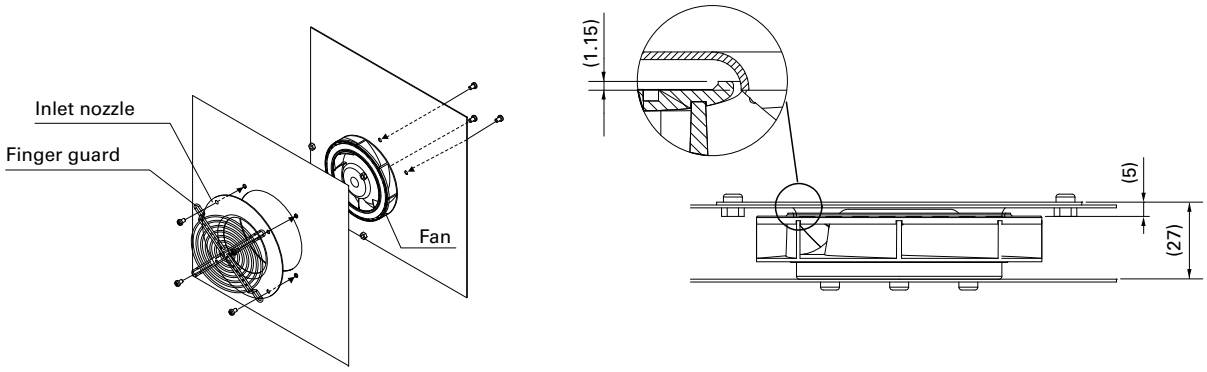

Options

Finger guards
page: p. 591

Model no.: 109-099E, 109-099H

Inlet nozzle
page: p. 595

Model no.: 109-1080, 109-1080H

Centrifugal Fan

ø133×91 mm

San Ace C133 9TJ type

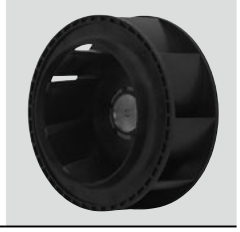

General Specifications

- Material ..... Motor case: Aluminum, Impeller: Plastic (Flammability: UL 94V-0)
- Expected life ..... See the table below. (L10 life: 90% survival rate for continuous operation in free air at 60˚C, rated voltage) Expected life at 40°C is for reference only.
- Motor protection function ..... Locked rotor burnout protection, Reverse polarity protection For details, please refer to p. 608.
- Dielectric strength ..... 50/60 Hz, 500 VAC, for 1 minute (between lead wire conductors and motor case)
- Insulation resistance ..... 10 MΩ min. at 500 VDC (between lead wire conductors and motor case)
- Sound pressure level (SPL) ..... A-weighted sound pressure level (SPL) at 1 m away from the air inlet.
- Storage temperature ..... -30 to +70˚C (Non-condensing)
- Lead wire ..... ⊕Red ⊖Black Sensor Yellow Control Brown
- Mass ..... 660 g

Specifications

When the optional inlet nozzle (109-1069) is mounted.

The models listed below **have ribs and a pulse sensor with PWM control.**

Model no.	Rated voltage [V]	Operating voltage range [V]	PWM duty cycle* [%]	Rated current [A]	Rated input [W]	Rated speed [min⁻¹]	Max. airflow [m³/min]	Max. airflow [CFM]	Max. static pressure [Pa]	Max. static pressure [inchH₂O]	SPL [dB (A)]	Operating temperature [˚C]	Expected life [h]
9TJ24P0H61	24	20.4 to 27.6	100	1.2	28.8	4150	6.39	226	395	1.59	61	-20 to +70	40000/60˚C (70000/40˚C)
9TJ48P0H01	48	36 to 72	100	0.55	26.4	4150	6.39	226	395	1.59	61		

PWM frequency is 25 kHz. Models without ratings for 0% PWM duty cycle have zero speed at 0%. When control terminal is open, speed is the same as at 100% duty cycle.

Note: The mark indicates Short Lead Time Service applicable models. See p. 664 for details.

Airflow - Static Pressure Characteristics / PWM Duty - Speed Characteristics Example

9TJ24P0H61 With pulse sensor with PWM control

PWM duty cycle

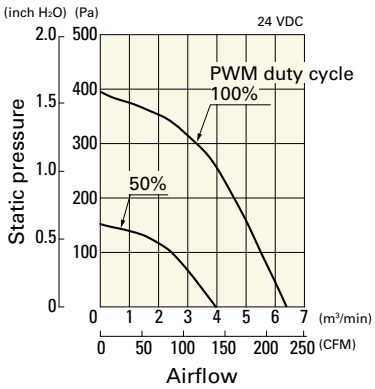

Operating voltage range

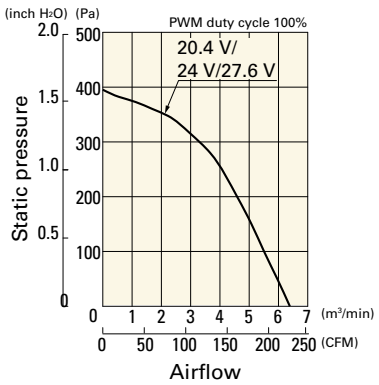

PWM duty - Speed characteristics example

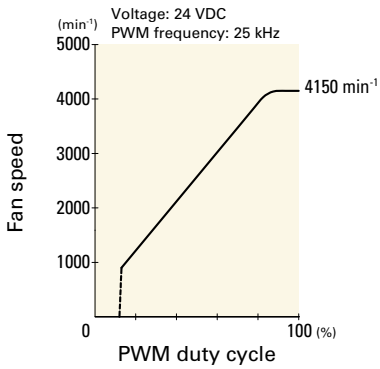

9TJ48P0H01 With pulse sensor with PWM control

PWM duty cycle

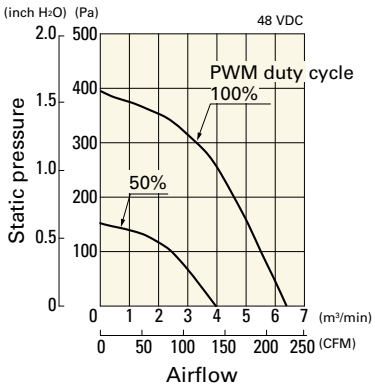

Operating voltage range

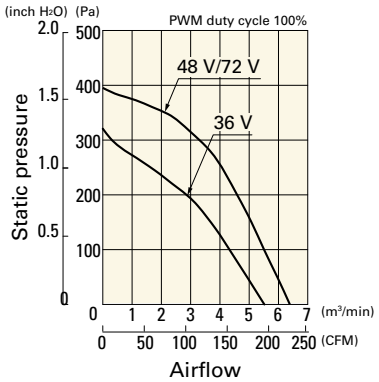

PWM duty - Speed characteristics example

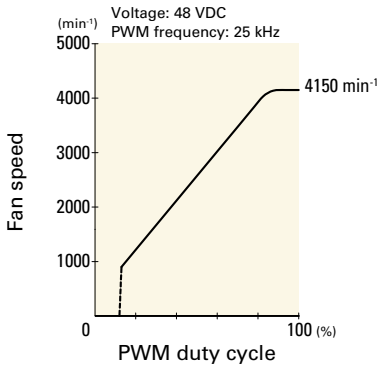

Dimensions (unit: mm)

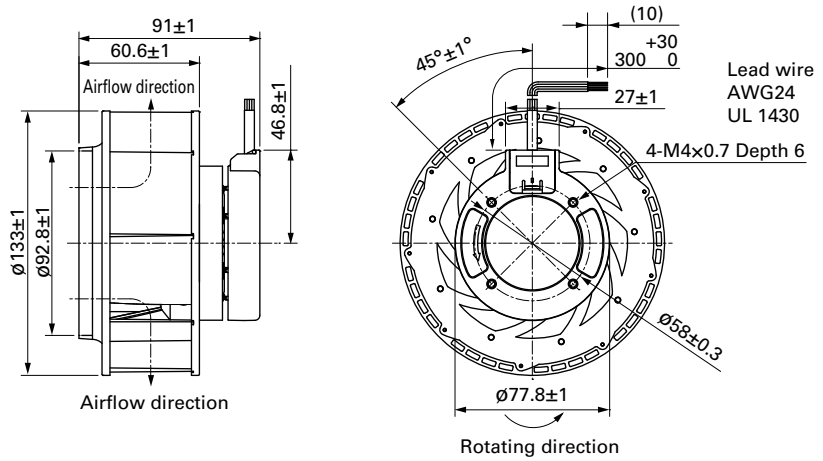

Reference Dimensions of Mounting Holes and Vent Opening (unit: mm)

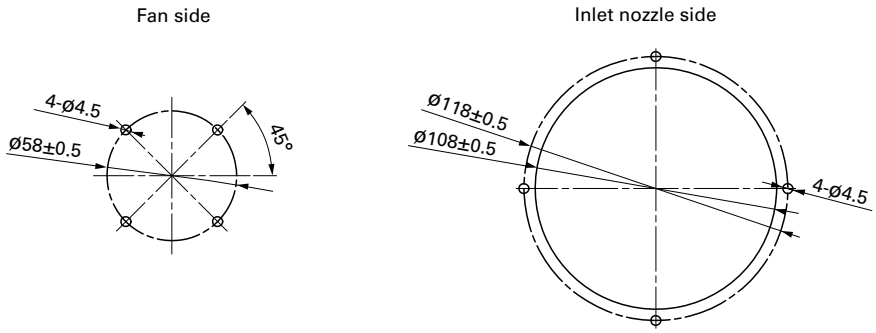

Reference Diagram for Mounting (unit: mm)

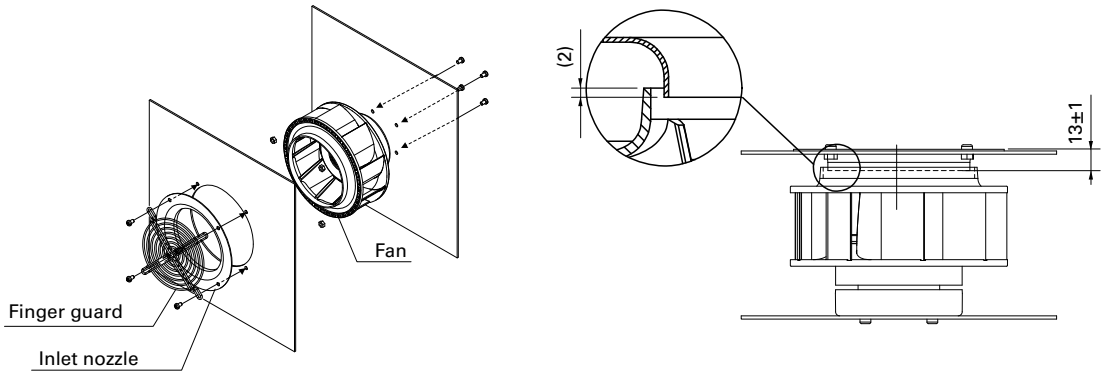

Options

Finger guards	page: p. 591
Model no.: 109-1112, 109-1112H	

Inlet nozzle	page: p. 595
Model no.: 109-1069, 109-1069H	

Centrifugal Fan

ø150×35 mm

San Ace C150 9TN type

General Specifications

- Material ..... Motor case: Aluminum, Impeller: Plastic (Flammability: UL 94V-0)
- Expected life ..... See the table below. (L10 life: 90% survival rate for continuous operation in free air at 60˚C, rated voltage) Expected life at 40°C is for reference only.
- Motor protection function ..... Locked rotor burnout protection, Reverse polarity protection For details, please refer to p. 608.
- Dielectric strength ..... 50/60 Hz, 500 VAC, for 1 minute (between lead wire conductors and motor case)
- Insulation resistance ..... 10 MΩ min. at 500 VDC (between lead wire conductors and motor case)
- Sound pressure level (SPL) ..... A-weighted sound pressure level (SPL) at 1 m away from the air inlet.
- Storage temperature ..... -30 to +70˚C (Non-condensing)
- Lead wire ..... ⊕Red ⊖Black Sensor Yellow Control Brown
- Mass ..... 330 g

Specifications

When the optional inlet nozzle (109-1081) is mounted.

The models listed below **have ribs and a pulse sensor with PWM control.**

Model no.	Rated voltage [V]	Operating voltage range [V]	PWM duty cycle* [%]	Rated current [A]	Rated input [W]	Rated speed [min⁻¹]	Max. airflow [m³/min]	Max. airflow [CFM]	Max. static pressure [Pa]	Max. static pressure [inchH₂O]	SPL [dB (A)]	Operating temperature [˚C]	Expected life [h]
9TN24P1H01	24	20.4 to 27.6	100	0.62	14.9	3800	3.83	135	410	1.65	59	-20 to +70	40000/60˚C (70000/40˚C)
9TN48P1H01	48	36.0 to 55.2	100	0.32	15.4	3800	3.83	135	390	1.57	59		

PWM frequency is 25 kHz. Models without ratings for 0% PWM duty cycle have zero speed at 0%. When control terminal is open, speed is the same as at 100% duty cycle.

Note 1: Max input of 9TN24P1H01: 21.4 W, 9TN48P1H01: 22 W.
Note 2: Sensor and control options are available for selection. Refer to the table on pp. 649 to 650.
Note 3: The » mark indicates Short LeadTime Service applicable models. See p. 664 for details.

Airflow - Static Pressure Characteristics / PWM Duty - Speed Characteristics Example

9TN24P1H01 With pulse sensor with PWM control

PWM duty cycle

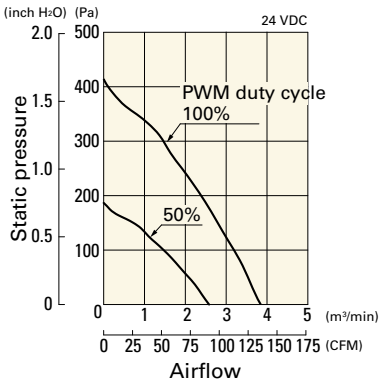

Operating voltage range

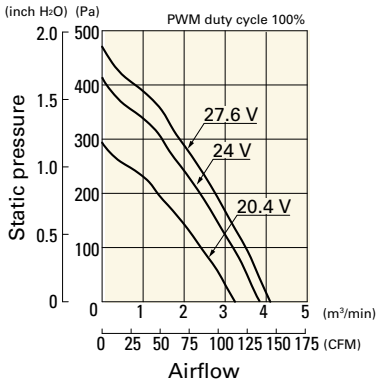

PWM duty - Speed characteristics example

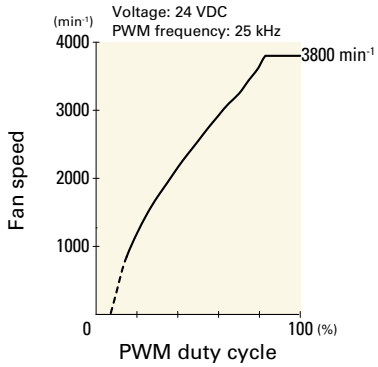

Airflow - Static Pressure Characteristics / PWM Duty - Speed Characteristics Example

9TN48P1H01 With pulse sensor with PWM control

PWM duty cycle

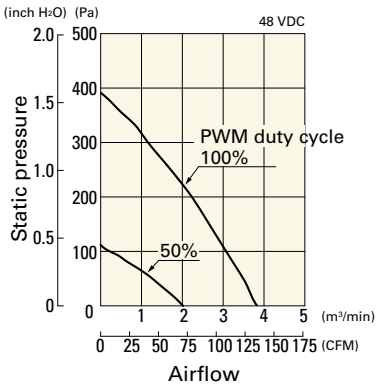

Operating voltage range

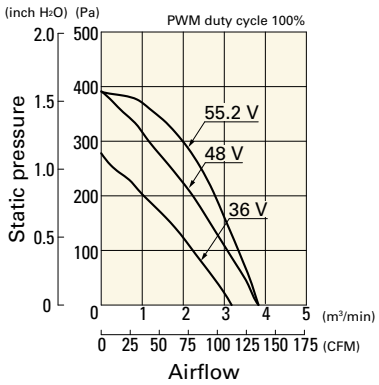

PWM duty - Speed characteristics example

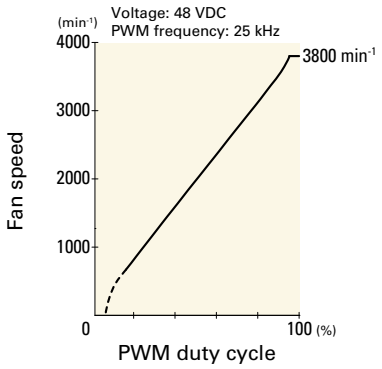

Dimensions (unit: mm)

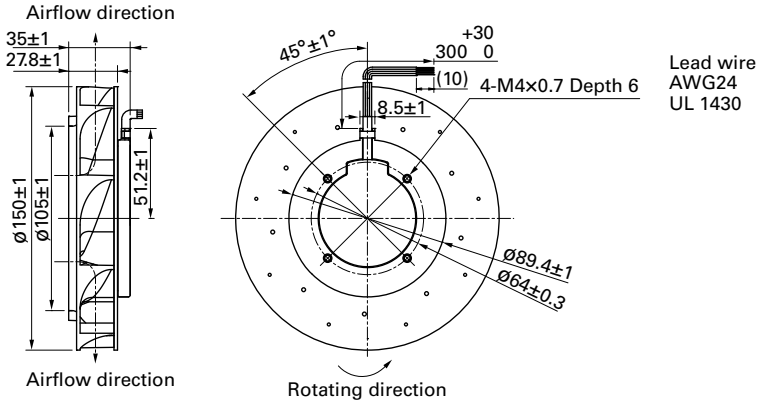

Reference Dimensions of Mounting Holes and Vent Opening (unit: mm)

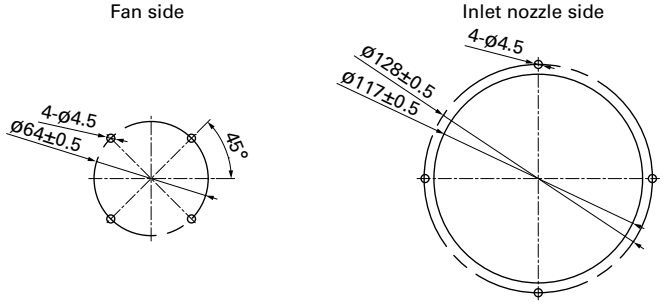

Reference Diagram for Mounting (unit: mm)

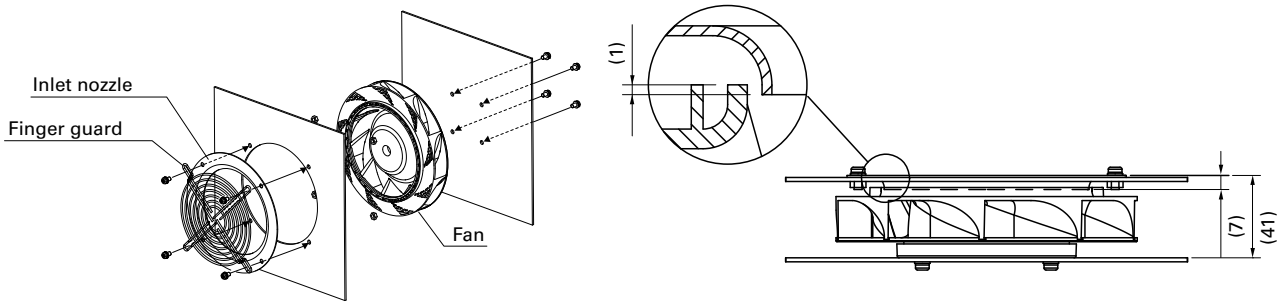

Options

Finger guards	page: p. 591	Inlet nozzle	page: p. 595
Model no.: 109-1104, 109-1104H		Model no.: 109-1081, 109-1081H	

Centrifugal Fan

ø175×69 mm

San Ace C175 9TGA type

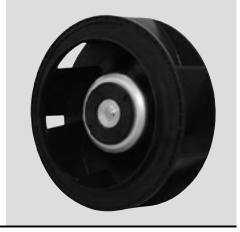

General Specifications

- Material ..... Motor case: Aluminum (Black coating), Impeller: Plastic (Flammability: UL 94V-0)
- Expected life ..... See the table below. (L10 life: 90% survival rate for continuous operation in free air at 60˚C, rated voltage) Expected life at 40°C is for reference only.
- Motor protection function ..... Locked rotor burnout protection, Reverse polarity protection For details, please refer to p. 608.
- Dielectric strength ..... 50/60 Hz, 500 VAC, for 1 minute (between lead wire conductors and motor case)
- Insulation resistance ..... 10 MΩ min. at 500 VDC (between lead wire conductors and motor case)
- Sound pressure level (SPL) ..... A-weighted sound pressure level (SPL) at 1 m away from the air inlet.
- Storage temperature ..... -30 to +70˚C (Non-condensing)
- Lead wire ..... ⊕Red ⊖Black Sensor Yellow Control Brown
- Mass ..... 720 g

Specifications

When the optional inlet nozzle (109-1073) is mounted.

The models listed below **have ribs and a pulse sensor with PWM control.**

Model no.	Rated voltage [V]	Operating voltage range [V]	PWM duty cycle* [%]	Rated current [A]	Rated input [W]	Rated speed [min⁻¹]	Max. airflow [m³/min]	Max. airflow [CFM]	Max. static pressure [Pa]	Max. static pressure [inchH₂O]	SPL [dB (A)]	Operating temperature [˚C]	Expected life [h]
9TGA24P0H001	24	16 to 36	100	4.8	115	4950	15.3	541	830	3.33	77	-20 to +70	40000/60˚C (70000/40˚C)
			15	0.14	3.36	800	2.5	88.3	21.8	0.088	38		
9TGA48P0G001	48	36 to 72	100	3.5	168	5700	17.6	622	1100	4.42	80		
			15	0.07	3.36	800	2.5	88.3	21.8	0.088	38		

PWM frequency is 25 kHz. Models without ratings for 0% PWM duty cycle have zero speed at 0%. When control terminal is open, speed is the same as at 100% duty cycle.

Note 1: Max input of 9TGA24P0H001: 210 W, 9TGA48P0G001: 325 W at rated voltage.
Note 2: The mark indicates Short LeadTime Service applicable models. See p. 664 for details.

Airflow - Static Pressure Characteristics / PWM Duty - Speed Characteristics Example

9TGA24P0H001 With pulse sensor with PWM control

PWM duty cycle

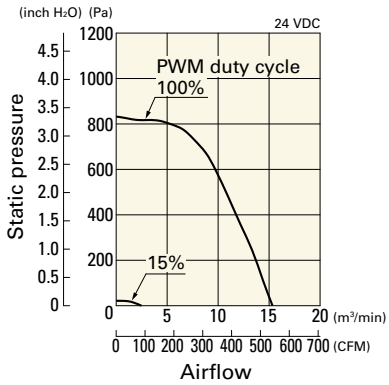

Operating voltage range

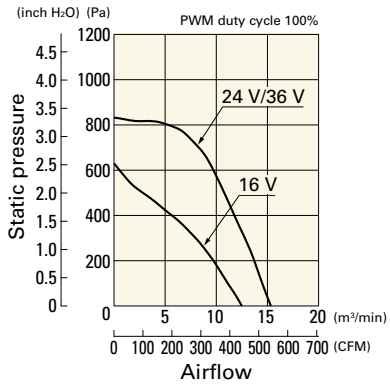

PWM duty - Speed characteristics example

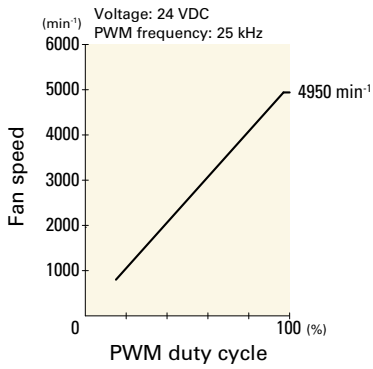

Airflow - Static Pressure Characteristics / PWM Duty - Speed Characteristics Example

9TGA48P0G001 With pulse sensor with PWM control

PWM duty cycle

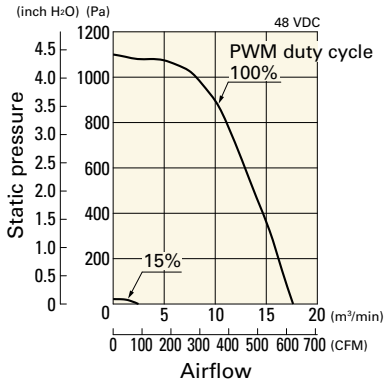

Operating voltage range

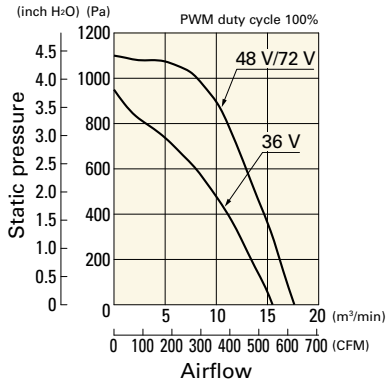

PWM duty - Speed characteristics example

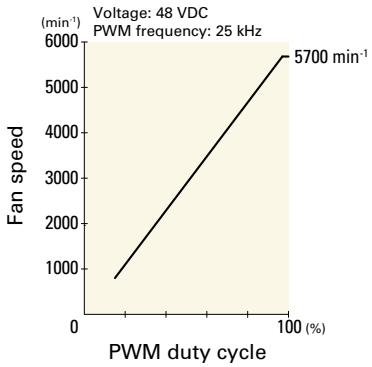

Dimensions (unit: mm)

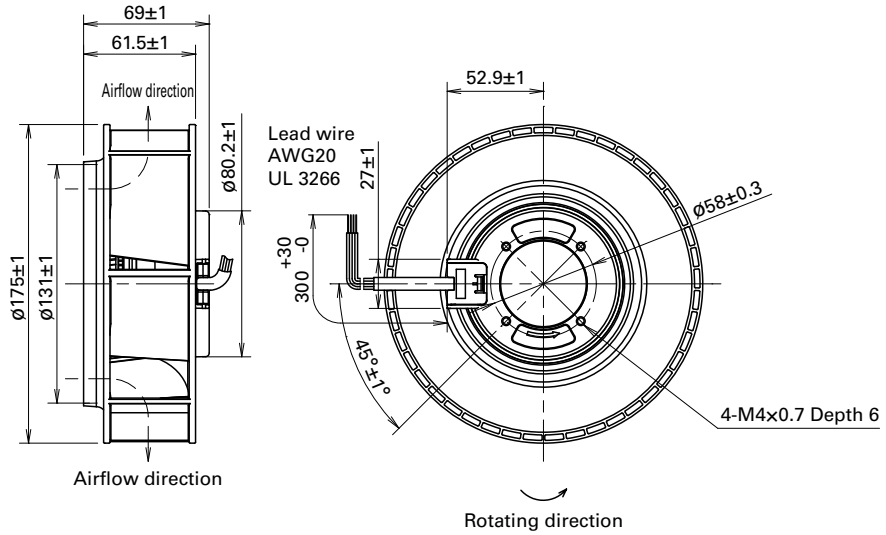

Reference Dimensions of Mounting Holes and Vent Opening (unit: mm)

Fan side

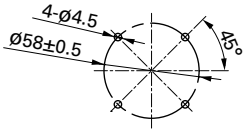

Inlet nozzle side

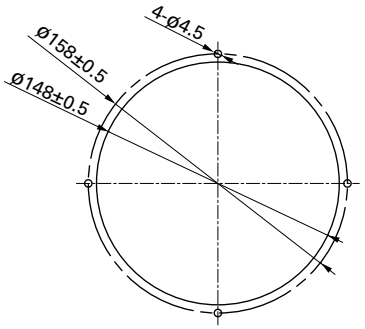

Reference Diagram for Mounting (unit: mm)

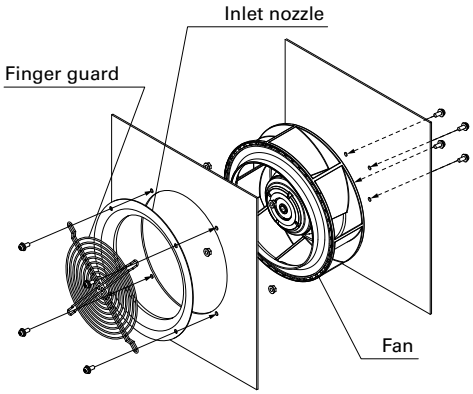

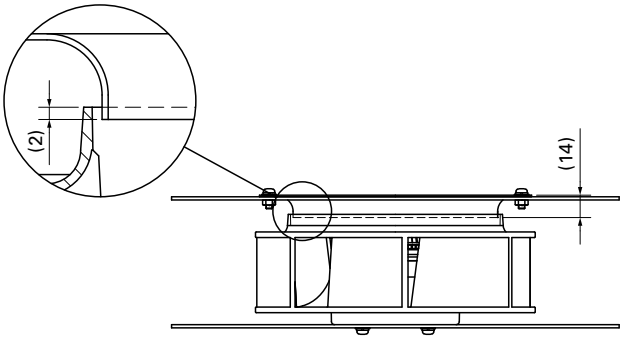

Options

Finger guards	page: p. 591

Model no.: 109-722, 109-722H

Inlet nozzle	page: p. 595

Model no.: 109-1073, 109-1073H

Errata sheet

ø175×69 mm

San Ace C175 9TG type

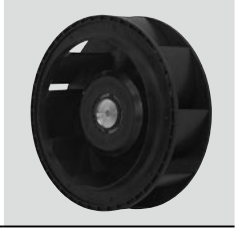

General Specifications

- Material ..... Motor case: Aluminum, Impeller: Plastic (Flammability: UL 94V-0)
- Expected life ..... See the table below. (L10 life: 90% survival rate for continuous operation in free air at 60˚C, rated voltage) Expected life at 40°C is for reference only.
- Motor protection function ..... Locked rotor burnout protection, Reverse polarity protection For details, please refer to p. 608.
- Dielectric strength ..... 50/60 Hz, 500 VAC, for 1 minute (between lead wire conductors and motor case)
- Insulation resistance ..... 10 MΩ min. at 500 VDC (between lead wire conductors and motor case)
- Sound pressure level (SPL) ..... A-weighted sound pressure level (SPL) at 1 m away from the air inlet.
- Storage temperature ..... -30 to +70˚C (Non-condensing)
- Lead wire ..... ⊕Red ⊖Black Sensor Yellow Control Brown
- Mass ..... 750 g

Specifications

When the optional inlet nozzle (109-1073) is mounted.

The models listed below **have ribs and a pulse sensor with PWM control.**

Model no.	Rated voltage [V]	Operating voltage range [V]	PWM duty cycle* [%]	Rated current [A]	Rated input [W]	Rated speed [min⁻¹]	Max. airflow [m³/min]	Max. airflow [CFM]	Max. static pressure [Pa]	Max. static pressure [inchH₂O]	SPL [dB (A)]	Operating temperature [˚C]	Expected life [h]
9TG24P0G01	24	20.4 to 27.6	100	3.9	93.6	4700	14.0	494.7	885	3.55	73	-20 to +60	40000/60˚C (70000/40˚C)
9TG24P0S01			100	2.35	56.4	3900	11.6	409.8	609	2.45	69	-20 to +70	
9TG48P0G01	48	36 to 55.2	100	1.95	93.6	4700	14.0	494.7	885	3.55	73		

PWM frequency is 25 kHz. Models without ratings for 0% PWM duty cycle have zero speed at 0%. When control terminal is open, speed is the same as at 100% duty cycle.

Note 1: Max input of 9TG24P0G01: 140 W, 9TG24P0S01: 94 W, 9TG48P0G01: 130 W at rated voltage.
Note 2: Sensor and control options are available for selection. Refer to the table on p. 649.
Note 3: The » mark indicates Short Lead Time Service applicable models. See p. 664 for details.

Airflow - Static Pressure Characteristics / PWM Duty - Speed Characteristics Example

9TG24P0G01 With pulse sensor with PWM control

PWM duty cycle

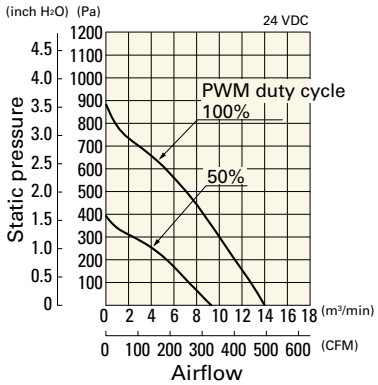

Operating voltage range

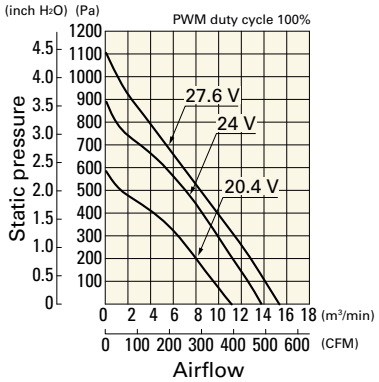

PWM duty - Speed characteristics example

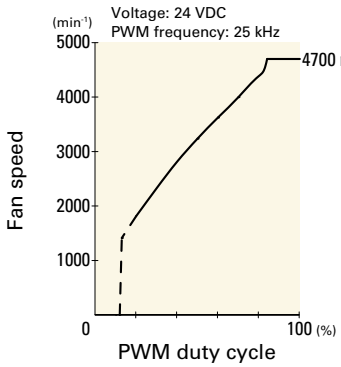

Airflow - Static Pressure Characteristics / PWM Duty - Speed Characteristics Example

9TG24P0S01 With pulse sensor with PWM control

PWM duty cycle

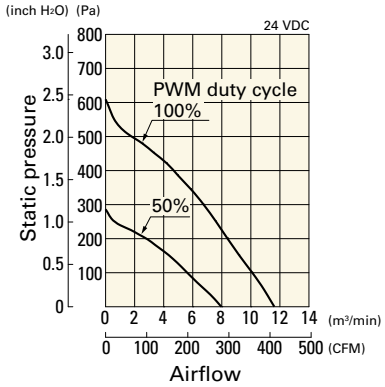

Operating voltage range

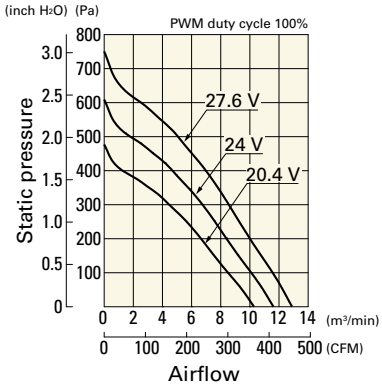

PWM duty - Speed characteristics example

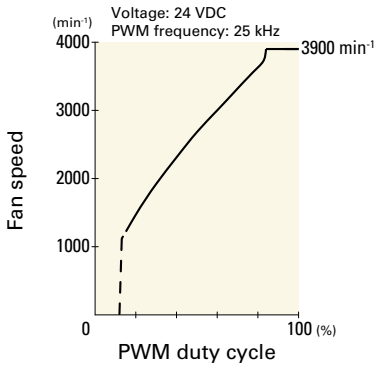

9TG48P0G01 With pulse sensor with PWM control

PWM duty cycle

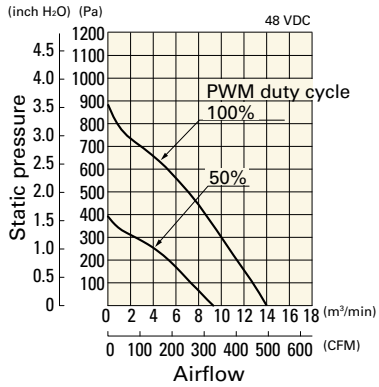

Operating voltage range

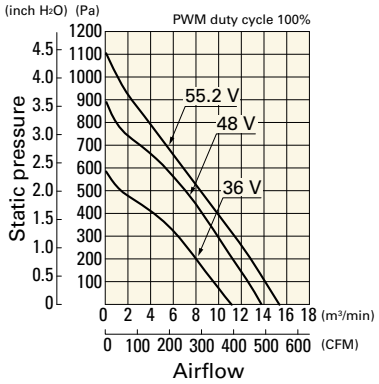

PWM duty - Speed characteristics example

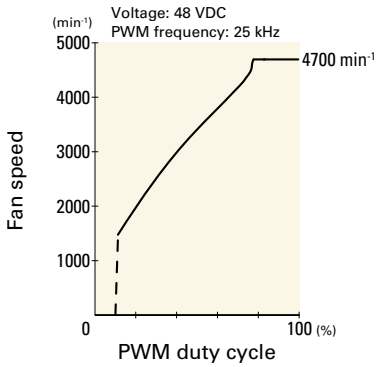

Dimensions (unit: mm)

Lead wire
AWG22 (Model: 9TG24P0G01)
AWG24 (Model: 9TG24P0S01, 9TG48P0G01)
UL 1430

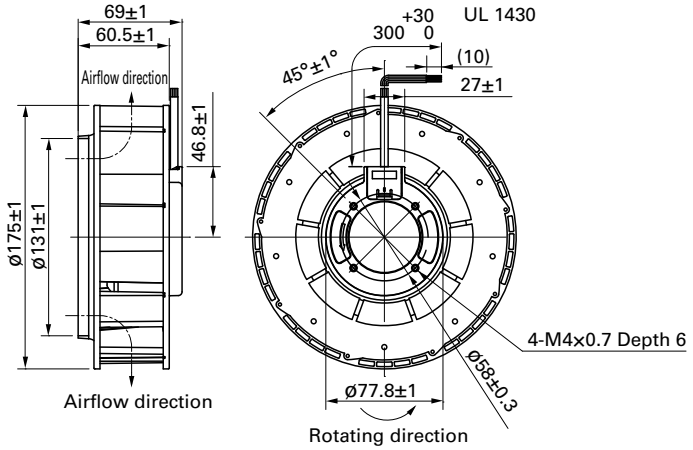

Reference Dimensions of Mounting Holes and Vent Opening (unit: mm)

Fan side

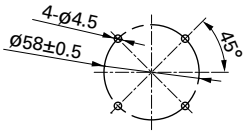

Inlet nozzle side

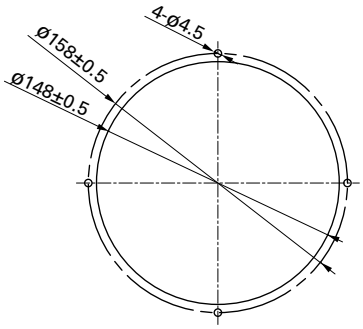

Reference Diagram for Mounting (unit: mm)

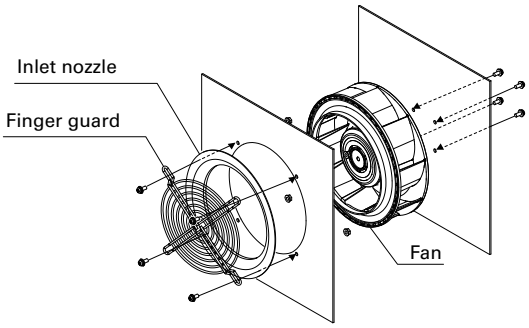

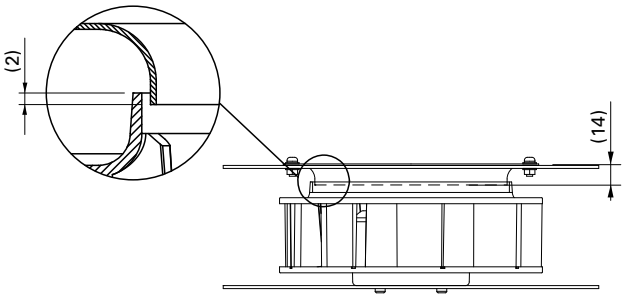

Options

Finger guards	page: p. 591
Model no.: 109-722, 109-722H	

Inlet nozzle	page: p. 595
Model no.: 109-1073, 109-1073H	

Centrifugal Fan

ø221×71 mm

San Ace C221 9TP type

General Specifications

- Material ..... Motor case: Aluminum, Impeller: Plastic (Flammability: UL 94V-0)
- Expected life ..... See the table below. (L10 life: 90% survival rate for continuous operation in free air at 60˚C, rated voltage) Expected life at 40°C is for reference only.
- Motor protection function ..... Locked rotor burnout protection, Reverse polarity protection For details, please refer to p. 608.
- Dielectric strength ..... 50/60 Hz, 500 VAC, for 1 minute (between lead wire conductors and motor case)
- Insulation resistance ..... 10 MΩ min. at 500 VDC (between lead wire conductors and motor case)
- Sound pressure level (SPL) ..... A-weighted sound pressure level (SPL) at 1 m away from the air inlet.
- Storage temperature ..... -30 to +70˚C (Non-condensing)
- Lead wire ..... ⊕Red ⊖Black Sensor Yellow Control Brown
- Mass ..... 1050 g

Specifications

When the optional inlet nozzle (109-1135) is mounted.

The models listed below **have ribs and a pulse sensor with PWM control.**

Model no.	Rated voltage [V]	Operating voltage range [V]	PWM duty cycle* [%]	Rated current [A]	Rated input [W]	Rated speed [min⁻¹]	Max. airflow [m³/min]	Max. airflow [CFM]	Max. static pressure [Pa]	Max. static pressure [inchH₂O]	SPL [dB (A)]	Operating temperature [˚C]	Expected life [h]
9TP24P0H001	24	16 to 36	100	3.2	76.8	3050	17.6	622	530	2.13	71	-20 to +70	40000/60˚C (70000/40˚C)
			15	0.4	9.6	1000	5.75	203	57.4	0.23	53		
9TP48P0G001	48	36 to 72	100	2.75	132	3650	21	742	760	3.05	74	-20 to +60	
			15	0.2	9.6	1000	5.75	203	57.4	0.23	53		
9TP48P0H001			100	1.6	76.8	3050	17.6	622	530	2.13	71	-20 to +70	
			15	0.2	9.6	1000	5.75	203	57.4	0.23	53		

PWM frequency is 25 kHz. Models without ratings for 0% PWM duty cycle have zero speed at 0%. When control terminal is open, speed is the same as at 100% duty cycle.

Note 1: Max input of 9TP48P0G001: 280 W, 9TP24P0H001/9TP48P0H001: 160 W at rated voltage.
Note 2: Sensor and control options are available for selection. Refer to the table on p. 650.
Note 3: The » mark indicates Short LeadTime Service applicable models. See p. 664 for details.

Airflow - Static Pressure Characteristics / PWM Duty - Speed Characteristics Example

9TP24P0H001 With pulse sensor with PWM control

PWM duty cycle

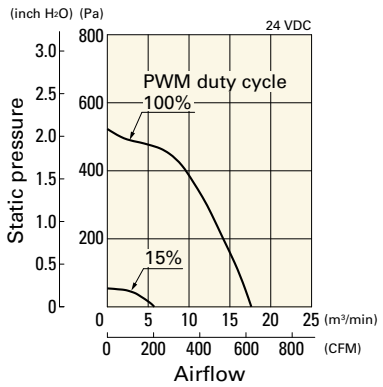

Operating voltage range

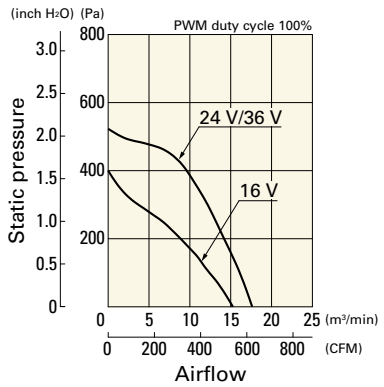

PWM duty - Speed characteristics example

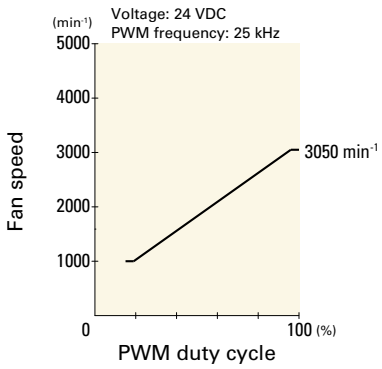

Airflow - Static Pressure Characteristics / PWM Duty - Speed Characteristics Example

9TP48P0G001 With pulse sensor with PWM control

PWM duty cycle

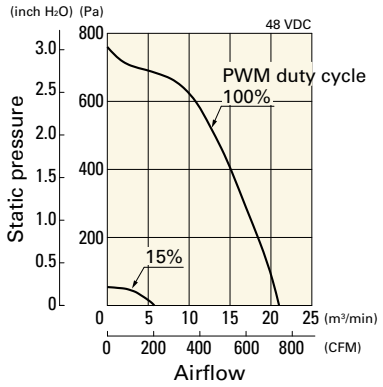

Operating voltage range

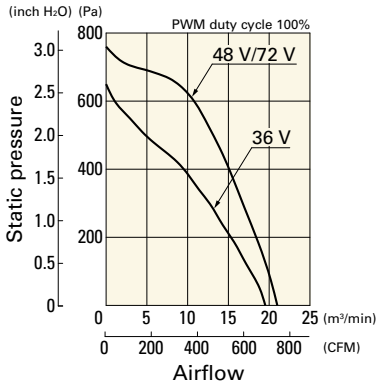

PWM duty - Speed characteristics example

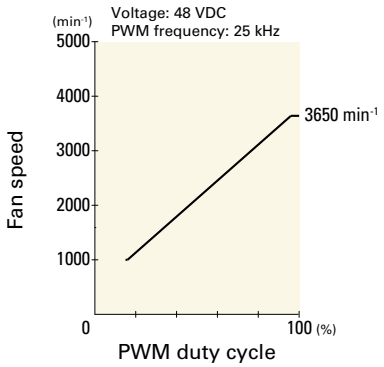

9TP48P0H001 With pulse sensor with PWM control

PWM duty cycle

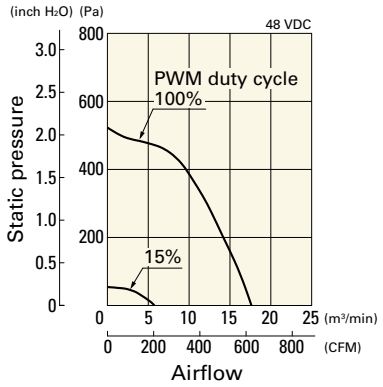

Operating voltage range

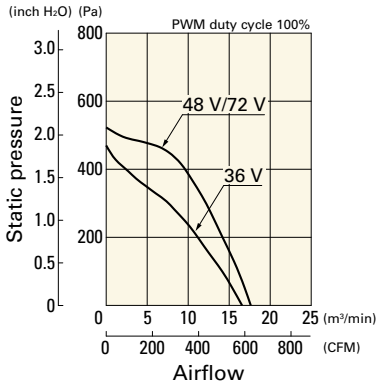

PWM duty - Speed characteristics example

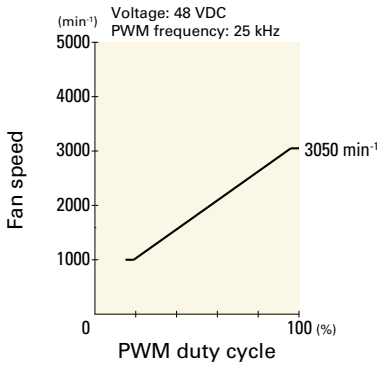

Dimensions (unit: mm)

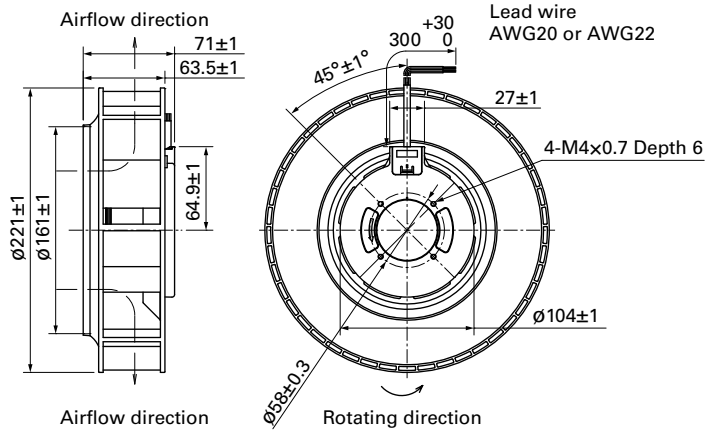

Reference Dimensions of Mounting Holes and Vent Opening (unit: mm)

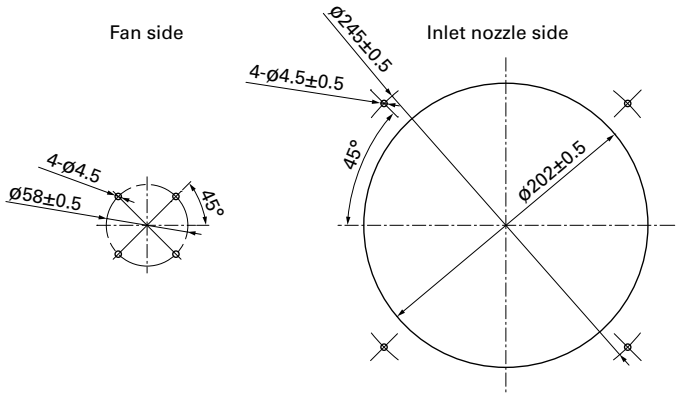

Reference Diagram for Mounting (unit: mm) Bracket-mounted model of this fan is available. For details, refer to pp. 459 to 461.

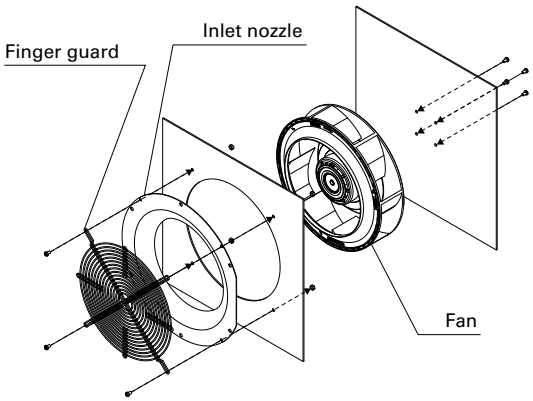

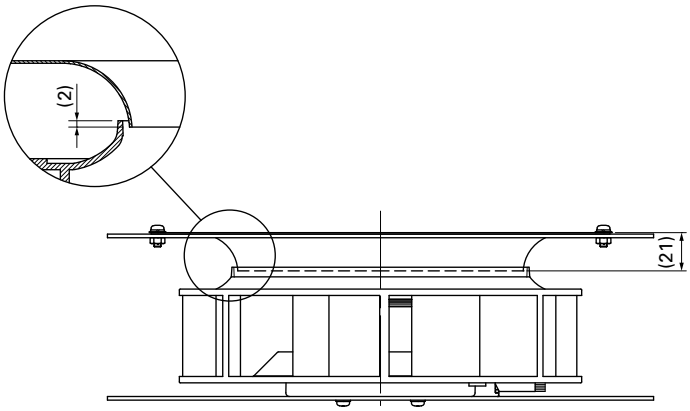

Options

Finger guards	page: p. 593

Model no.: 109-1138, 109-1138H

Inlet nozzle	page: p. 595

Model no.: 109-1135, 109-1135H

Errata sheet

ø225×99 mm

San Ace C225 9TS type

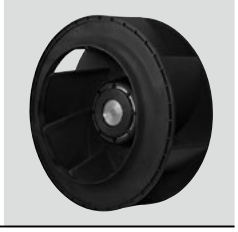

General Specifications

- Material ..... Motor case: Aluminum, Impeller: Plastic (Flammability: UL 94V-0)
- Expected life ..... See the table below. (L10 life: 90% survival rate for continuous operation in free air at 60˚C, rated voltage) Expected life at 40°C is for reference only.
- Motor protection function ..... Locked rotor burnout protection, Reverse polarity protection For details, please refer to p. 608.
- Dielectric strength ..... 50/60 Hz, 500 VAC, for 1 minute (between lead wire conductors and motor case)
- Insulation resistance ..... 10 MΩ min. at 500 VDC (between lead wire conductors and motor case)
- Sound pressure level (SPL) ..... A-weighted sound pressure level (SPL) at 1 m away from the air inlet.
- Storage temperature ..... -30 to +70˚C (Non-condensing)
- Lead wire ..... ⊕Red ⊖Black Sensor Yellow Control Brown
- Mass ..... 1220 g

Specifications

When the optional inlet nozzle (109-1134) is mounted.

The models listed below **have ribs and a pulse sensor with PWM control.**

Model no.	Rated voltage [V]	Operating voltage range [V]	PWM duty cycle* [%]	Rated current [A]	Rated input [W]	Rated speed [min⁻¹]	Max. airflow [m³/min]	Max. airflow [CFM]	Max. static pressure [Pa]	Max. static pressure [inchH₂O]	SPL [dB (A)]	Operating temperature [˚C]	Expected life [h]
9TS48P0G001	48	36 to 72	100	3.65	175.2	3550	28.1	992	861	3.46	74.5	-20 to +60	40000/60˚C (70000/40˚C)
			15	0.24	11.5	1000	7.85	277	68.5	0.28	52.0		
9TS48P0H001			100	2.08	99.8	2900	22.7	802	590	2.37	70.5	-20 to +70	
			15	0.24	11.5	1000	7.85	277	68.5	0.28	52.0		

PWM frequency is 25 kHz. Models without ratings for 0% PWM duty cycle have zero speed at 0%. When control terminal is open, speed is the same as at 100% duty cycle.

Note 1: Max input of 9TS48P0G001: 380 W, 9TS48P0H001: 200 W at rated voltage.
Note 2: The » mark indicates Short Lead Time Service applicable models. See p. 664 for details.

Airflow - Static Pressure Characteristics / PWM Duty - Speed Characteristics Example

9TS48P0G001 With pulse sensor with PWM control

PWM duty cycle

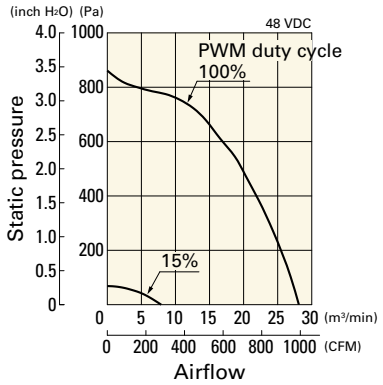

Operating voltage range

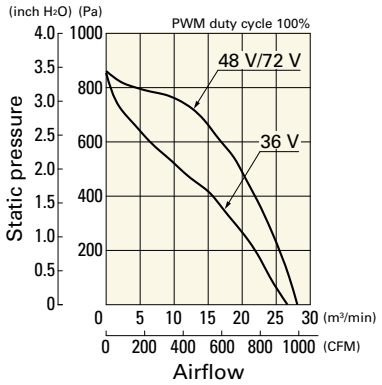

PWM duty - Speed characteristics example

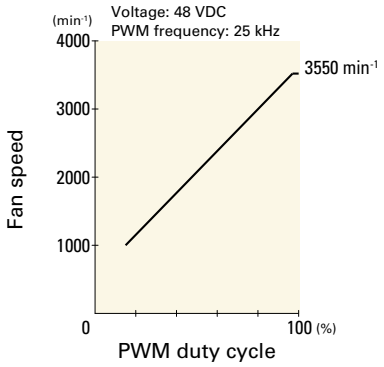

Airflow - Static Pressure Characteristics / PWM Duty - Speed Characteristics Example

9TS48P0H001 With pulse sensor with PWM control

PWM duty cycle

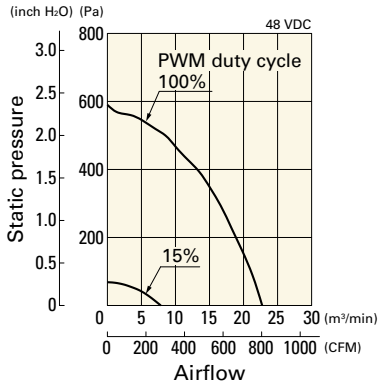

Operating voltage range

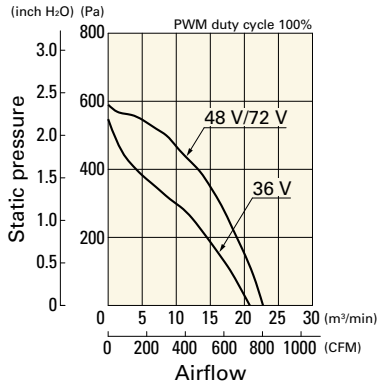

PWM duty - Speed characteristics example

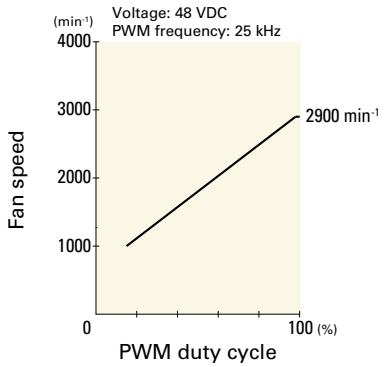

Dimensions (unit: mm)

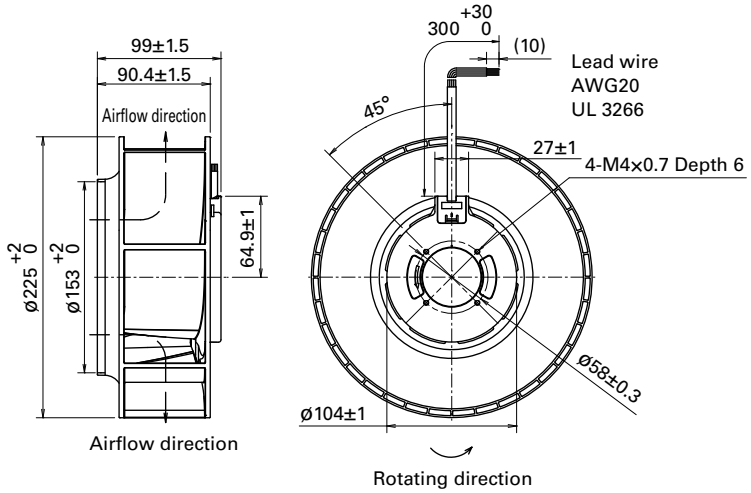

Reference Dimensions of Mounting Holes and Vent Opening (unit: mm)

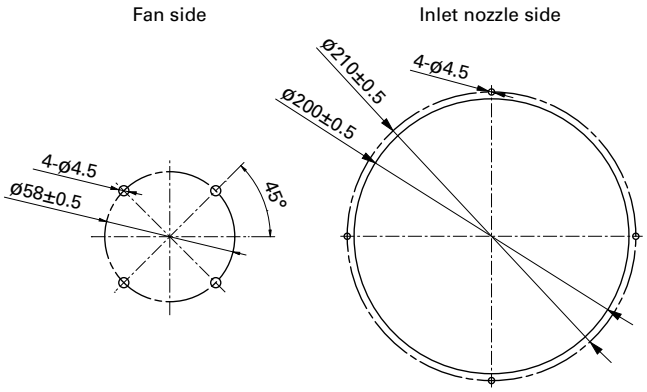

Reference Diagram for Mounting (unit: mm) Bracket-mounted model of this fan is available. For details, refer to pp. 462 to 464.

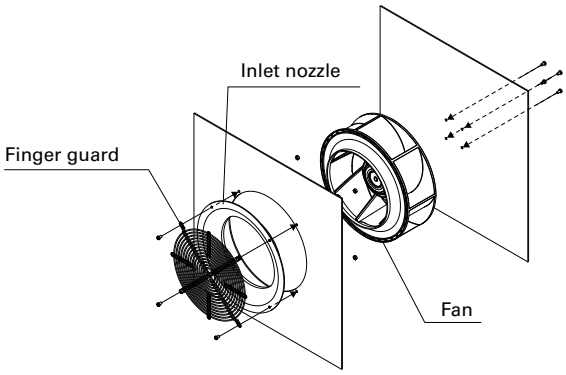

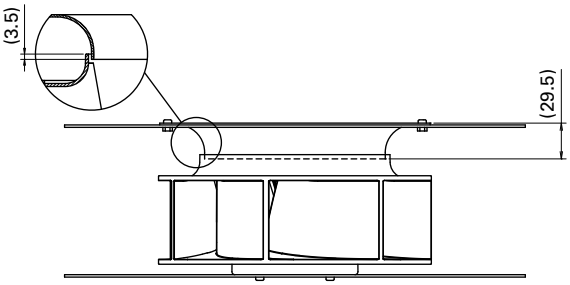

Options

Finger guards	page: p. 593

Model no.: 109-1137, 109-1137H

Inlet nozzle	page: p. 595

Model no.: 109-1134, 109-1134H

270×270×99 mm

San Ace C221 9B1TP type

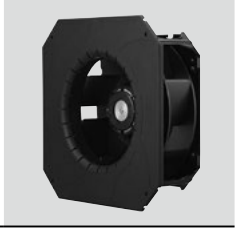

General Specifications

- Material ..... Motor case: Aluminum, Impeller: Plastic (Flammability: UL 94V-0)
  Bracket: Aluminum (Black coating), Plastic (Flammability: UL 94V-0)
- Expected life ..... See the table below. (L10 life: 90% survival rate for continuous operation in free air at 60°C, rated voltage)
  Expected life at 40°C is for reference only.
- Motor protection function ..... Locked rotor burnout protection, Reverse polarity protection
  For details, please refer to p. 608.
- Dielectric strength ..... 50/60 Hz, 500 VAC, for 1 minute (between lead wire conductors and bracket)
- Insulation resistance ..... 10 MΩ min. at 500 VDC (between lead wire conductors and bracket)
- Sound pressure level (SPL) ..... A-weighted sound pressure level (SPL) at 1 m away from the air inlet.
- Storage temperature ..... -30 to +70°C (Non-condensing)
- Lead wire ..... ⊕Red ⊖Black Sensor Yellow Control Brown
- Mass ..... 1700 g

Specifications

The models listed below **have a pulse sensor with PWM control.**

Model no.	Rated voltage [V]	Operating voltage range [V]	PWM duty cycle* [%]	Rated current [A]	Rated input [W]	Rated speed [min⁻¹]	Max. airflow [m³/min]	Max. airflow [CFM]	Max. static pressure [Pa]	Max. static pressure [inchH₂O]	SPL [dB (A)]	Operating temperature [°C]	Expected life [h]
9B1TP24P0H001	24	16 to 36	100	3.2	76.8	3050	17.6	622	530	2.13	71	-20 to +70	40000/60°C (70000/40°C)
			15	0.4	9.6	1000	5.75	203	57.4	0.23	53		
9B1TP48P0G001	48	36 to 72	100	2.75	132	3650	21.0	742	760	3.05	74	-20 to +60	
			15	0.2	9.6	1000	5.75	203	57.4	0.23	53		
9B1TP48P0H001			100	1.6	76.8	3050	17.6	622	530	2.13	71	-20 to +70	
			15	0.2	9.6	1000	5.75	203	57.4	0.23	53		

PWM frequency is 25 kHz. Models without ratings for 0% PWM duty cycle have zero speed at 0%. When control terminal is open, speed is the same as at 100% duty cycle.

Note: Max input of 9B1TP24P0H001/9B1TP48P0H001: 160 W, 9B1TP48P0G001: 280 W at rated voltage.

Airflow - Static Pressure Characteristics / PWM Duty - Speed Characteristics Example

9B1TP24P0H001 With pulse sensor with PWM control

PWM duty cycle

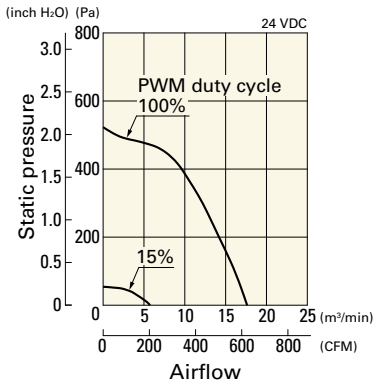

Operating voltage range

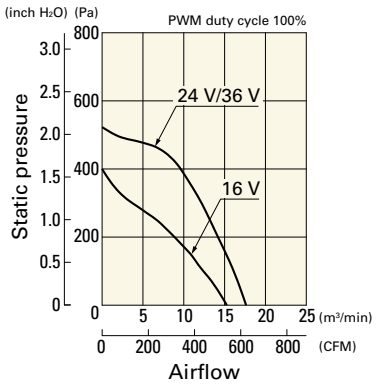

PWM duty - Speed characteristics example

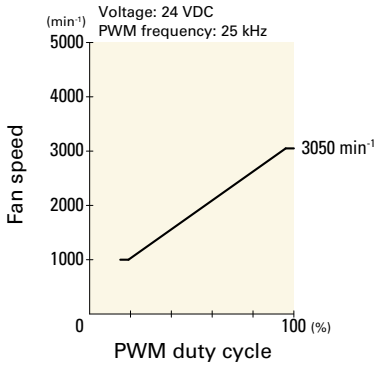

Airflow - Static Pressure Characteristics / PWM Duty - Speed Characteristics Example

9B1TP48P0G001 With pulse sensor with PWM control

PWM duty cycle

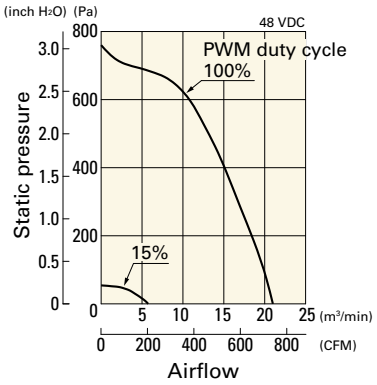

Operating voltage range

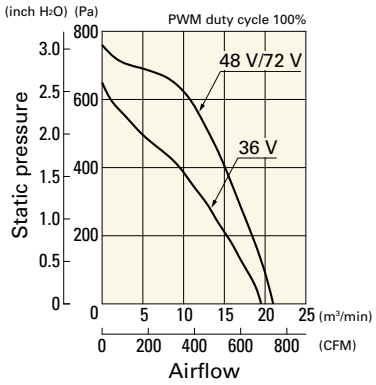

PWM duty - Speed characteristics example

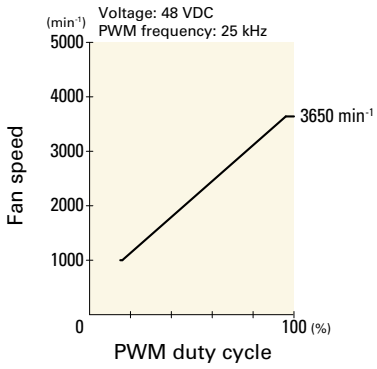

9B1TP48P0H001 With pulse sensor with PWM control

PWM duty cycle

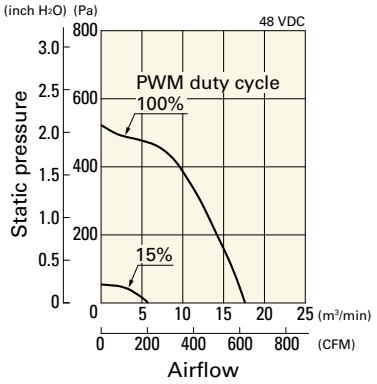

Operating voltage range

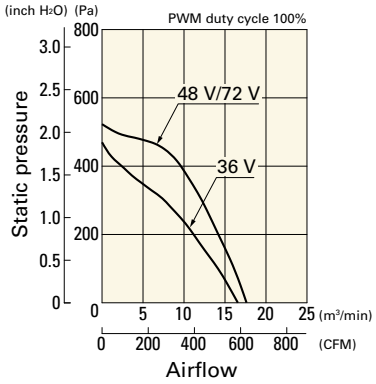

PWM duty - Speed characteristics example

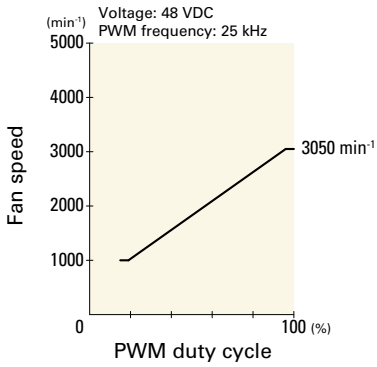

Dimensions (unit: mm)

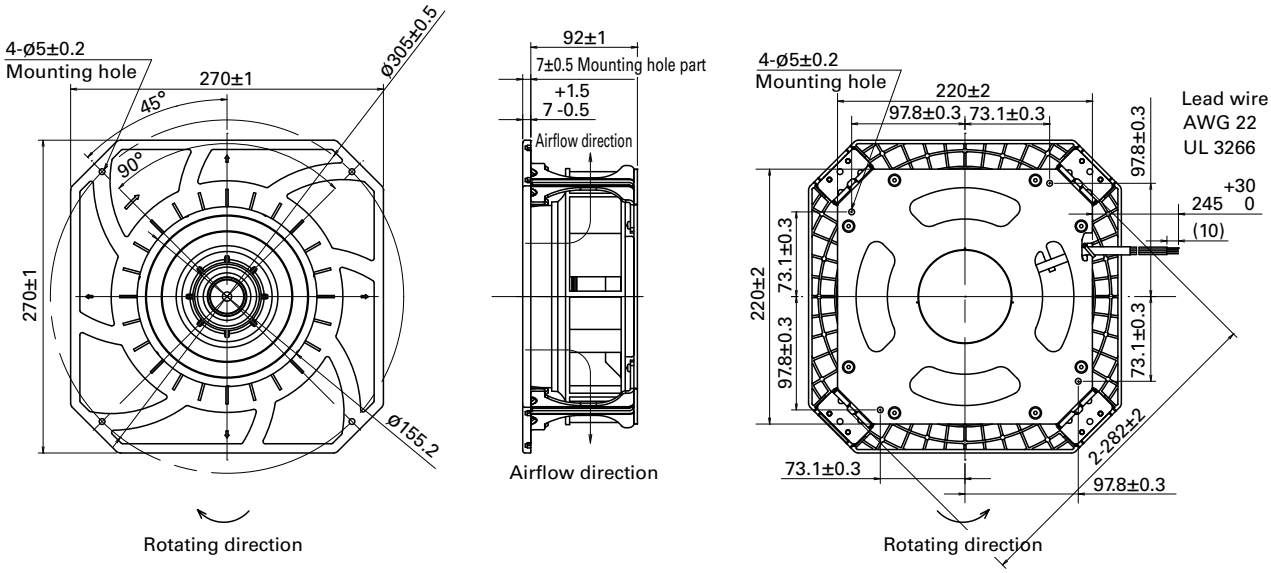

Reference Dimensions of Mounting Holes and Vent Opening (unit: mm)

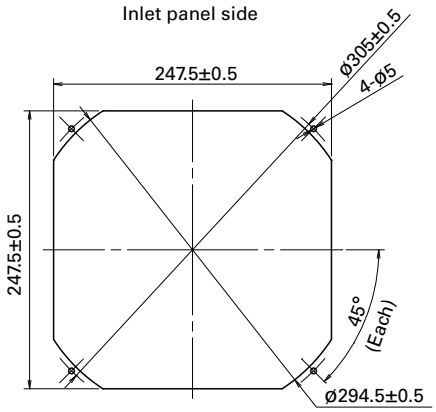

Reference Diagram for Mounting

Finger guard 109-1146 and 109-1146H should be mounted with four holes as in the drawing.

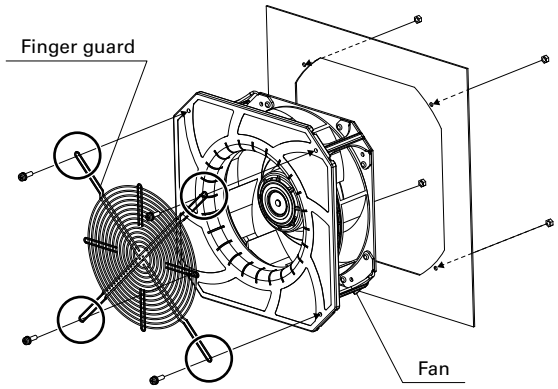

Options

Finger guards page: p. 594

Model no.: 109-1146, 109-1146H

270×270×119 mm

San Ace C225 9B1TS type

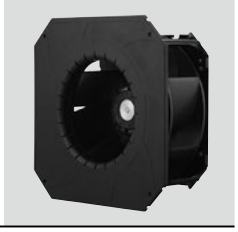

General Specifications

- Material ..... Motor case: Aluminum, Impeller: Plastic (Flammability: UL 94V-0)
  Bracket: Aluminum (Black coating), Plastic (Flammability: UL 94V-0)
- Expected life ..... See the table below. (L10 life: 90% survival rate for continuous operation in free air at 60°C, rated voltage)
  Expected life at 40°C is for reference only.
- Motor protection function ..... Locked rotor burnout protection, Reverse polarity protection
  For details, please refer to p. 608.
- Dielectric strength ..... 50/60 Hz, 500 VAC, for 1 minute (between lead wire conductors and bracket)
- Insulation resistance ..... 10 MΩ min. at 500 VDC (between lead wire conductors and bracket)
- Sound pressure level (SPL) ..... A-weighted sound pressure level (SPL) at 1 m away from the air inlet.
- Storage temperature ..... -30 to +70°C (Non-condensing)
- Lead wire ..... ⊕Red ⊖Black Sensor Yellow Control Brown
- Mass ..... 1920 g

Specifications

The models listed below **have a pulse sensor with PWM control.**

Model no.	Rated voltage [V]	Operating voltage range [V]	PWM duty cycle* [%]	Rated current [A]	Rated input [W]	Rated speed [min⁻¹]	Max. airflow [m³/min]	Max. airflow [CFM]	Max. static pressure [Pa]	Max. static pressure [inchH₂O]	SPL [dB (A)]	Operating temperature [°C]	Expected life [h]
9B1TS48P0G001	48	36 to 72	100	3.65	175.2	3550	28.1	992	861	3.46	74.5	-20 to +60	40000/60°C (70000/40°C)
			15	0.24	11.5	1000	7.85	277	68.5	0.28	52.0		
9B1TS48P0H001			100	2.08	99.8	2900	22.7	802	590	2.37	70.5	-20 to +70	
			15	0.24	11.5	1000	7.85	277	68.5	0.28	52.0		

PWM frequency is 25 kHz. Models without ratings for 0% PWM duty cycle have zero speed at 0%. When control terminal is open, speed is the same as at 100% duty cycle.

Note: Max input of 9B1TS48P0G001: 380 W, 9B1TS48P0H001: 200 W at rated voltage.

Airflow - Static Pressure Characteristics / PWM Duty - Speed Characteristics Example

9B1TS48P0G001 With pulse sensor with PWM control

PWM duty cycle

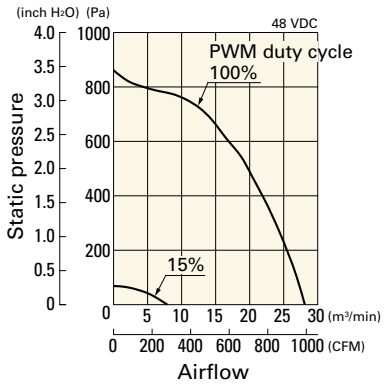

Operating voltage range

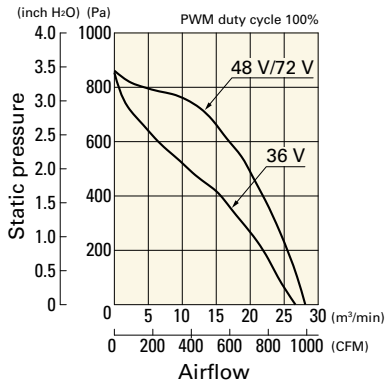

PWM duty - Speed characteristics example

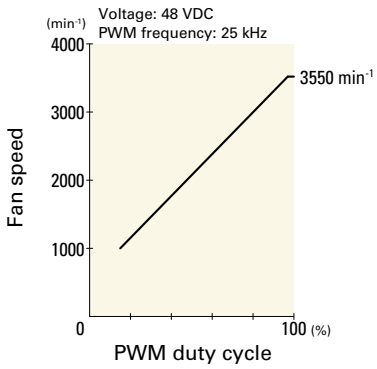

Airflow - Static Pressure Characteristics / PWM Duty - Speed Characteristics Example

9B1TS48P0H001 With pulse sensor with PWM control

PWM duty cycle

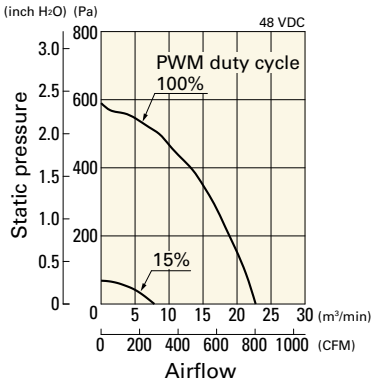

Operating voltage range

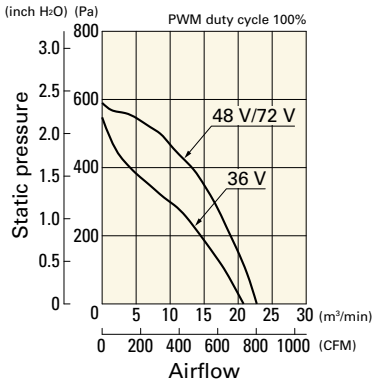

PWM duty - Speed characteristics example

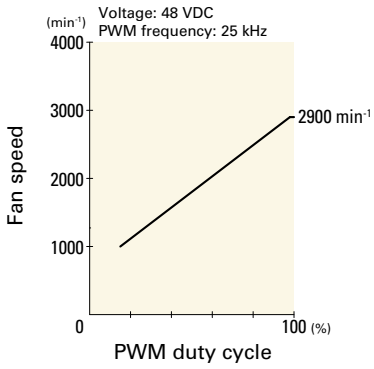

Dimensions (unit: mm)

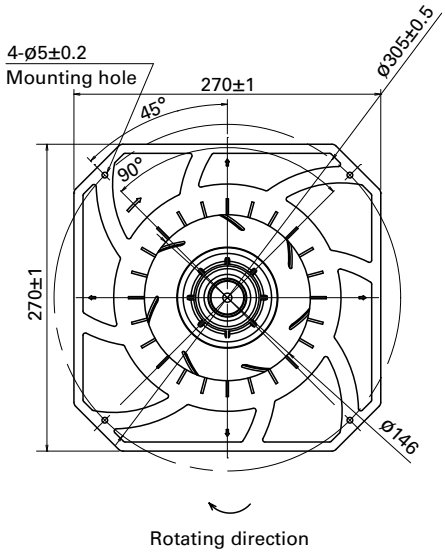

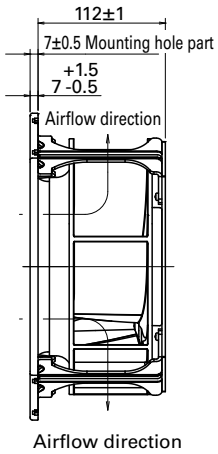

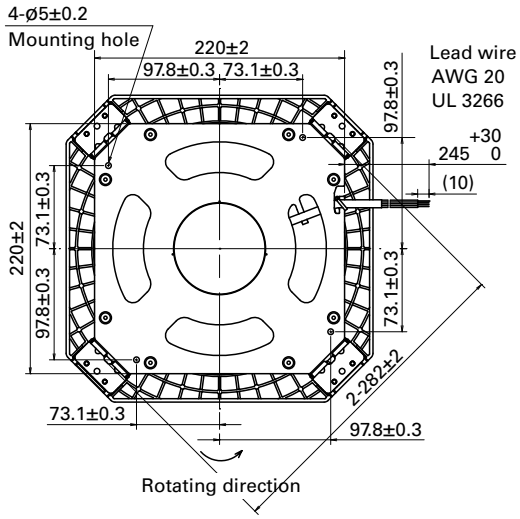

Reference Dimensions of Mounting Holes and Vent Opening (unit: mm)

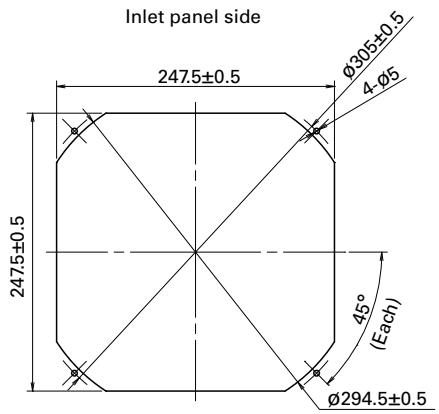

Reference Diagram for Mounting

Finger guard 109-1146 and 109-1146H should be mounted with four holes as in the drawing.

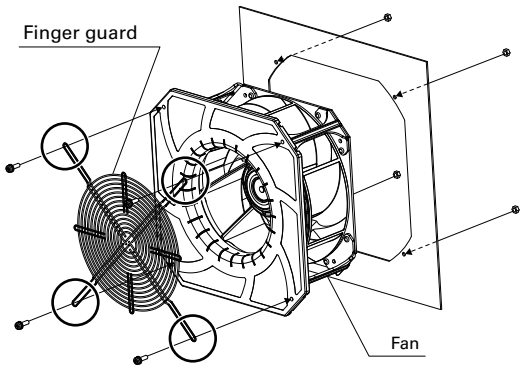

Options

Finger guards page: p. 594

Model no.: 109-1146, 109-1146H

Blower

Cooling fan specialized for high static pressure.
Related product: Splash Proof Blower p. 341

Model Numbering System

Not every combination of the following codes or characters is available. Contact us for an available combination.

109B	C	12	G	C	7	-1
Type name	Frame size	Voltage	Speed code	Sensor specifications	Frame thickness	Individual customer's spec

9B	MB	12	G	2	01	-1
Type name	Frame size	Voltage	Speed code	Frame thickness	Sensor specifications	Individual customer's spec

Fans with PWM control

9B	MB	12	P	2	G	01
Type name	Frame size	Voltage	PWM control	Frame thickness	Speed code	Individual customer's spec (2 to 3 digits)

Type name	109B	9B				
Frame size (mm)	C	D	F, FB	G	J	M, MB, MC
	52	76	120	160	127	97
Voltage (V)	12	24				
	12	24				
Speed code	F	G	H	K	M	S etc.
Sensor specifications	A, 02, 002	C, 01, 001	D			
	Without a sensor	With a pulse sensor	With a lock sensor			
Frame thickness (mm)	1	2	7	6		
	40	30, 32, 33	15	20		

How to Read Specifications (DC fan)

The following is a sample. See respective product pages for detailed information.

Model no.	Rated voltage [V]	Operating voltage range [V]	Rated current [A]	Rated input [W]	Rated speed [min^{-1}]	Max. airflow [m^3/min]	Max. airflow [CFM]	Max. static pressure [Pa]	Max. static pressure [inchH_2O]	SPL [dB (A)]	Operating temperature [°C]	Expected life [h]
9GA0412G7001	12	7 to 13.8	0.17	2.04	13100	0.36	12.7	192	0.77	42	-20 to +70	40000/60°C (70000/40°C)

Rated voltage ····· This is the necessary voltage to drive the fan. E.g.) 12 VDC, 24 VDC, 48 VDC
Operating voltage range ····· The voltage range over which fan operation is guaranteed.
Rated current ····· The current when the fan is operating at rated voltage (at free air).
Rated input ····· The power value when the fan is operating at rated voltage (at free air).
Rated speed ····· The speed when the fan is operating at rated voltage (at free air).
Max. airflow ····· The airflow at 0 Pa static pressure when the fan is operating at rated voltage. (Measured using the double chamber method)
Max. static pressure ····· The static pressure at 0 m^3/min airflow when the fan is operating at rated voltage. (Measured using the double chamber method)
SPL ····· A-weighted sound pressure level (SPL) when the fan operates at the rated speed.
For the measurement method, see the Technical Materials section in the catalog.
Operating temperature ····· The temperature range over which fan operation is guaranteed (Non-condensing).
Expected life ····· Service life hours that 90% of bearings will survive without failing when continuously operated at the rated voltage and 60°C temperature. Expected life at 40°C is for reference only.
For more information, please refer to the technical material section.

52×15 mm

San Ace B52 9BC type

General Specifications

- Material ..... Frame: Plastic (Flammability: UL 94V-0), Impeller: Plastic (Flammability: UL 94V-0)
- Expected life ..... See the table below. (L10 life: 90% survival rate for continuous operation in free air at 60˚C, rated voltage) Expected life at 40°C is for reference only.
- Motor protection function ..... Locked rotor burnout protection, Reverse polarity protection For details, please refer to p. 608.
- Dielectric strength ..... 50/60 Hz, 500 VAC, for 1 minute (between lead wire conductors and frame)
- Insulation resistance ..... 10 MΩ min. at 500 VDC (between lead wire conductors and frame)
- Sound pressure level (SPL) ..... A-weighted sound pressure level (SPL) at 1 m away from the air inlet.
- Storage temperature ..... -30 to +70˚C (Non-condensing)
- Lead wire ..... ⊕Red ⊖Black Sensor Yellow
- Mass ..... 33 g

Specifications

The models listed below **have a pulse sensor.**

Model no.	Rated voltage [V]	Operating voltage range [V]	Rated current [A]	Rated input [W]	Rated speed [min⁻¹]	Max. airflow [m³/min]	Max. airflow [CFM]	Max. static pressure [Pa]	Max. static pressure [inchH₂O]	SPL [dB (A)]	Operating temperature [˚C]	Expected life [h]
109BC12GC7-1	12	6 to 13.8	0.12	1.44	6200	0.125	4.4	215	0.86	43	-20 to +70	40000/60˚C (70000/40˚C)
109BC12HC7-1			0.1	1.2	5600	0.112	4.0	165	0.66	40		
109BC12FC7-1			0.08	0.96	5100	0.101	3.6	130	0.52	38		
109BC12MC7-1			0.06	0.72	4600	0.091	3.2	100	0.4	35		
109BC24GC7-1	24	12 to 27.6	0.07	1.68	6200	0.125	4.4	215	0.86	43		
109BC24HC7-1			0.05	1.2	5600	0.112	4.0	165	0.66	40		
109BC24FC7-1			0.04	0.96	5100	0.101	3.6	130	0.52	38		

Note 1: Sensor and control options are available for selection. Refer to the table on p. 634.
Note 2: The » mark indicates Short LeadTime Service applicable models. See p. 664 for details.

Airflow - Static Pressure Characteristics

109BC12GC7-1 With pulse sensor

Operating voltage range

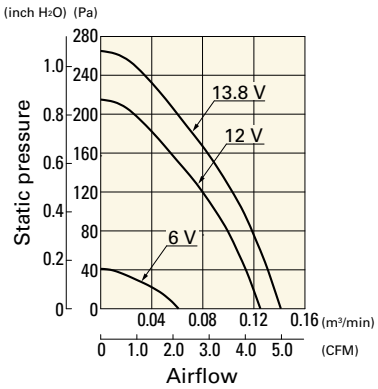

109BC12HC7-1 With pulse sensor

Operating voltage range

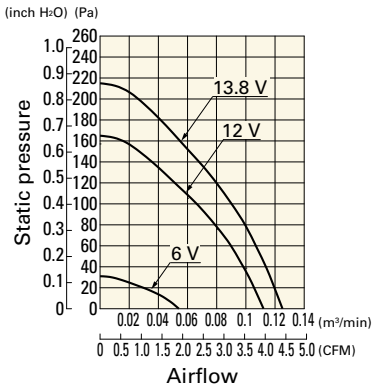

109BC12FC7-1 With pulse sensor

Operating voltage range

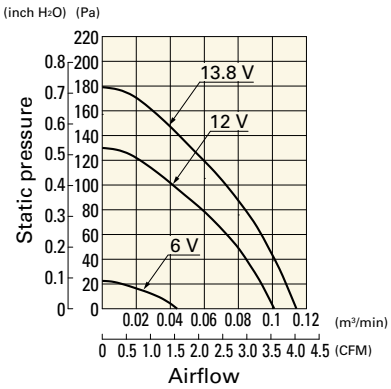

Airflow - Static Pressure Characteristics

109BC12MC7-1 With pulse sensor

Operating voltage range

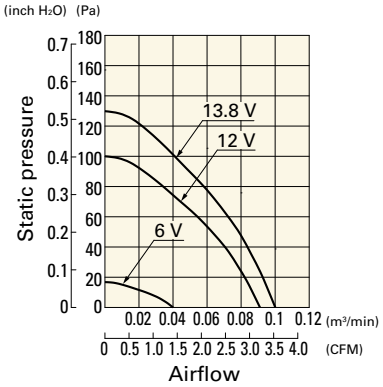

109BC24GC7-1 With pulse sensor

Operating voltage range

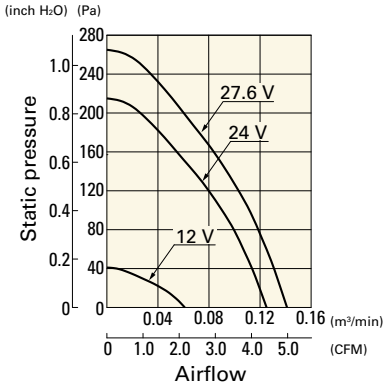

109BC24HC7-1 With pulse sensor

Operating voltage range

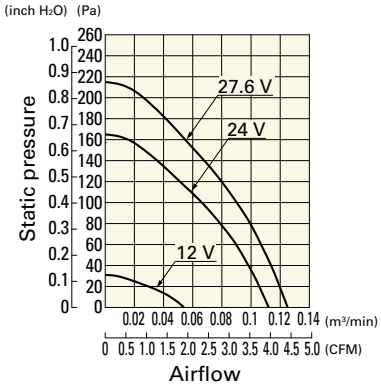

109BC24FC7-1 With pulse sensor

Operating voltage range

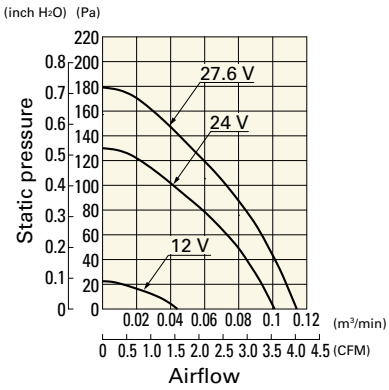

Dimensions (unit: mm)

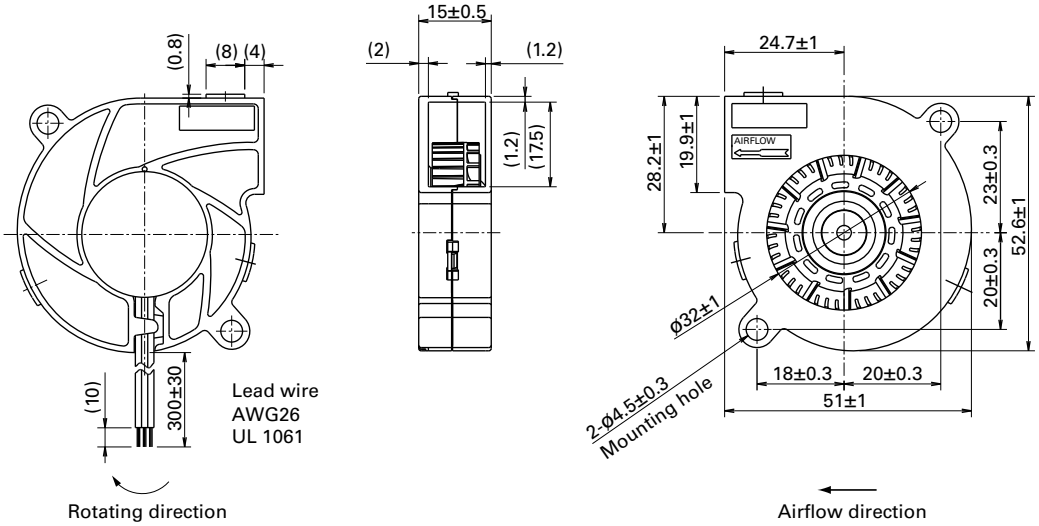

76×20 mm

San Ace B76 9BD type

General Specifications

- Material ..... Frame: Plastic (Flammability: UL 94V-0), Impeller: Plastic (Flammability: UL 94V-0)
- Expected life ..... See the table below. (L10 life: 90% survival rate for continuous operation in free air at 60˚C, rated voltage) Expected life at 40°C is for reference only.
- Motor protection function ..... Locked rotor burnout protection, Reverse polarity protection For details, please refer to p. 608.
- Dielectric strength ..... 50/60 Hz, 500 VAC, for 1 minute (between lead wire conductors and frame)
- Insulation resistance ..... 10 MΩ min. at 500 VDC (between lead wire conductors and frame)
- Sound pressure level (SPL) ..... A-weighted sound pressure level (SPL) at 1 m away from the air inlet.
- Storage temperature ..... -30 to +70˚C (Non-condensing)
- Lead wire ..... ⊕Red ⊖Black Sensor Yellow
- Mass ..... 58 g

Specifications

The models listed below **have a pulse sensor.**

Model no.	Rated voltage [V]	Operating voltage range [V]	Rated current [A]	Rated input [W]	Rated speed [min⁻¹]	Max. airflow [m³/min]	Max. airflow [CFM]	Max. static pressure [Pa]	Max. static pressure [inchH₂O]	SPL [dB (A)]	Operating temperature [˚C]	Expected life [h]
9BD12SC6-1	12	7 to 13.8	0.28	3.36	4500	0.29	10.2	300	1.2	43	-20 to +70	40000/60˚C (70000/40˚C)
9BD12HC6-1			0.21	2.52	4200	0.27	9.5	230	0.92	41		
9BD12FC6-1			0.18	2.16	3900	0.25	8.8	200	0.8	39		
9BD24SC6-40	24	10 to 27.6	0.16	3.84	4500	0.29	10.2	300	1.2	43		
9BD24HC6-1			0.12	2.88	4200	0.27	9.5	230	0.92	41		
9BD24FC6-1			0.1	2.4	3900	0.25	8.8	200	0.8	39		

Note 1: Sensor and control options are available for selection. Refer to the table on pp. 635 to 636.
Note 2: The » mark indicates Short LeadTime Service applicable models. See p. 664 for details.

Airflow - Static Pressure Characteristics

9BD12SC6-1 With pulse sensor

Operating voltage range

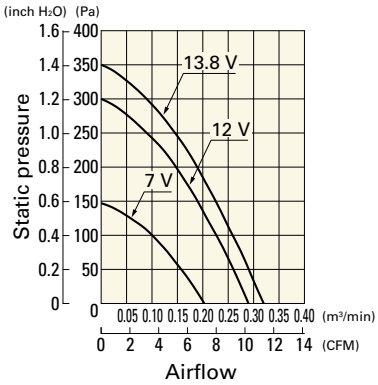

9BD12HC6-1 With pulse sensor

Operating voltage range

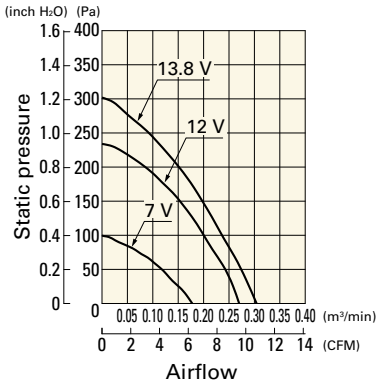

9BD12FC6-1 With pulse sensor

Operating voltage range

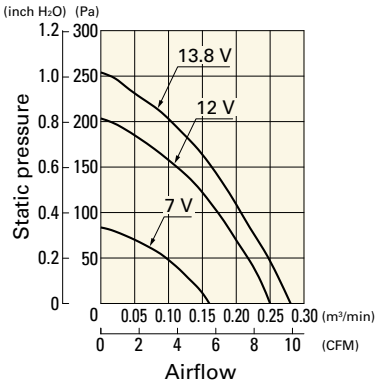

Airflow - Static Pressure Characteristics

9BD24SC6-40 With pulse sensor

Operating voltage range

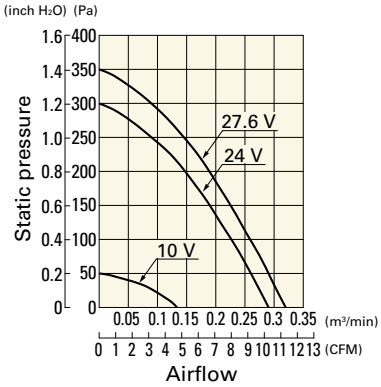

9BD24HC6-1 With pulse sensor

Operating voltage range

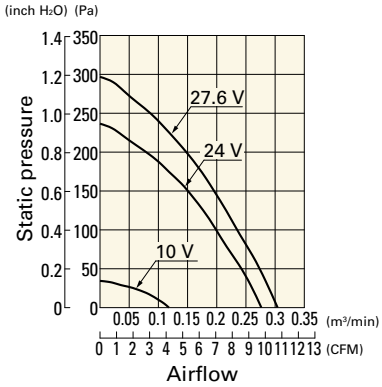

9BD24FC6-1 With pulse sensor

Operating voltage range

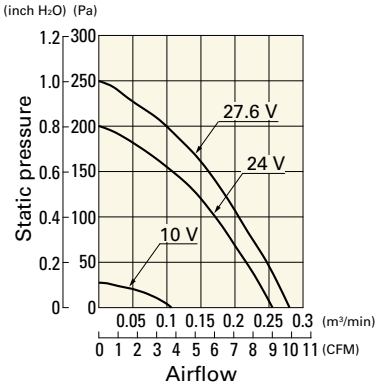

Dimensions (unit: mm)

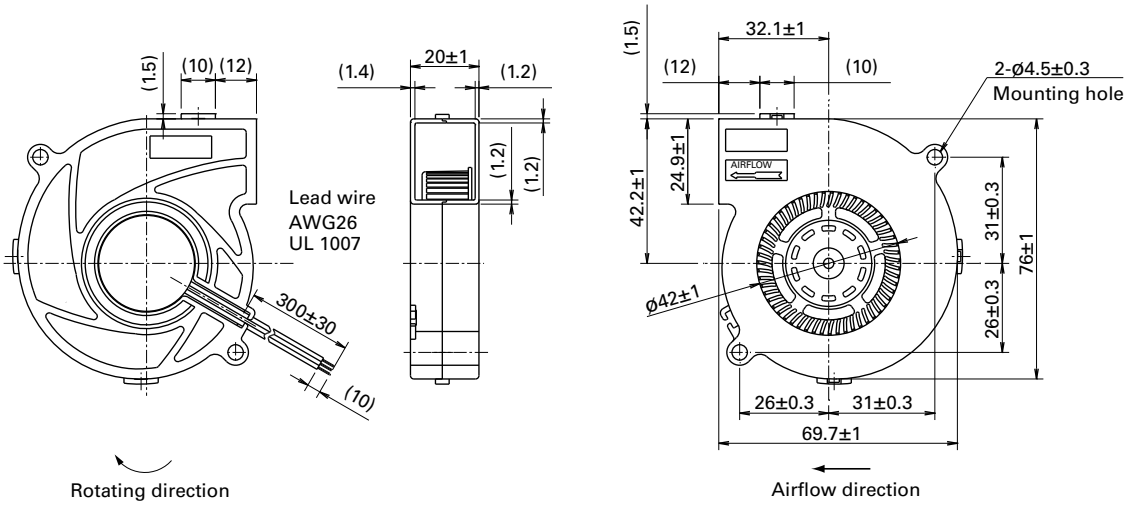

76×30 mm

San Ace B76 9BD type

General Specifications

- Material ..... Frame: Plastic (Flammability: UL 94V-0), Impeller: Plastic (Flammability: UL 94V-1)
- Expected life ..... See the table below. (L10 life: 90% survival rate for continuous operation in free air at 60˚C, rated voltage) Expected life at 40°C is for reference only.
- Motor protection function ..... Locked rotor burnout protection, Reverse polarity protection For details, please refer to p. 608.
- Dielectric strength ..... 50/60 Hz, 500 VAC, for 1 minute (between lead wire conductors and frame)
- Insulation resistance ..... 10 MΩ min. at 500 VDC (between lead wire conductors and frame)
- Sound pressure level (SPL) ..... A-weighted sound pressure level (SPL) at 1 m away from the air inlet.
- Storage temperature ..... -30 to +70˚C (Non-condensing)
- Lead wire ..... ⊕Red ⊖Black or Blue Sensor Yellow
- Mass ..... 100 g

Specifications

The models listed below **have a pulse sensor.**

Model no.	Rated voltage [V]	Operating voltage range [V]	Rated current [A]	Rated input [W]	Rated speed [min⁻¹]	Max. airflow [m³/min]	Max. airflow [CFM]	Max. static pressure [Pa]	Max. static pressure [inchH₂O]	SPL [dB (A)]	Operating temperature [˚C]	Expected life [h]
109BD12HC2	12	10.2 to 13.8	0.37	4.44	3000	0.36	12.7	151.9	0.61	41.5	-20 to +60	40000/60˚C (70000/40˚C)
109BD12FC2			0.27	3.24	2600	0.31	10.9	98	0.394	37	-20 to +70	
109BD12MC2			0.14	1.68	2100	0.25	8.8	58.8	0.236	32.5		
109BD24HC2	24	20.4 to 27.6	0.17	4.08	3000	0.36	12.7	151.9	0.61	41.5	-20 to +60	
109BD24FC2			0.14	3.36	2600	0.31	10.9	98	0.394	37	-20 to +70	
109BD24MC2			0.1	2.4	2100	0.25	8.8	58.8	0.236	32.5		

Note 1: Sensor and control options are available for selection. Refer to the table on p. 634.
Note 2: The » mark indicates Short LeadTime Service applicable models. See p. 664 for details.

Airflow - Static Pressure Characteristics

109BD12HC2 With pulse sensor

Operating voltage range

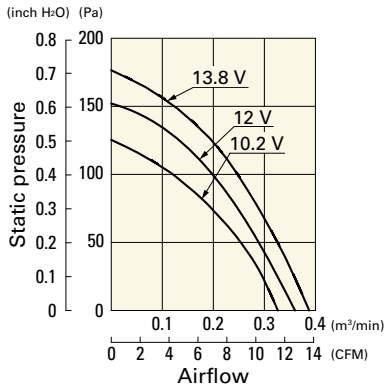

109BD12FC2 With pulse sensor

Operating voltage range

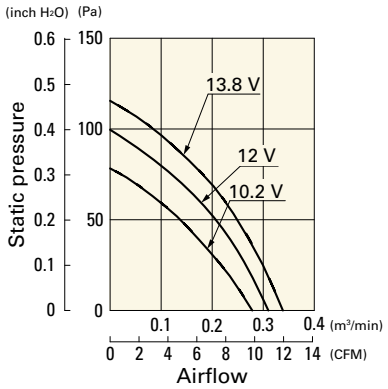

109BD12MC2 With pulse sensor

Operating voltage range

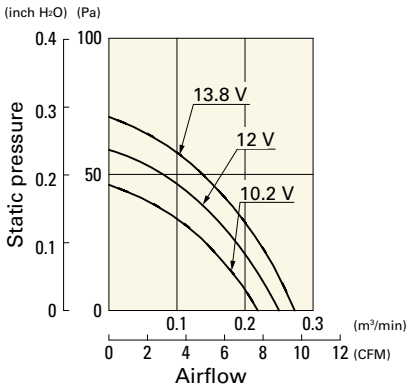

Airflow - Static Pressure Characteristics

109BD24HC2 With pulse sensor

Operating voltage range

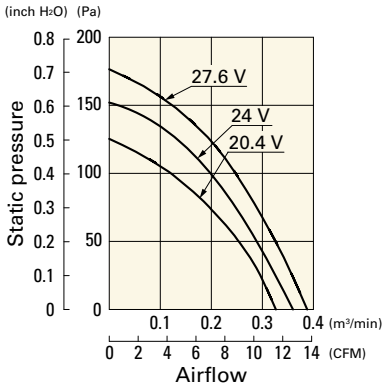

109BD24FC2 With pulse sensor

Operating voltage range

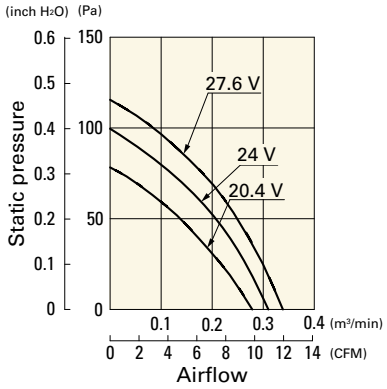

109BD24MC2 With pulse sensor

Operating voltage range

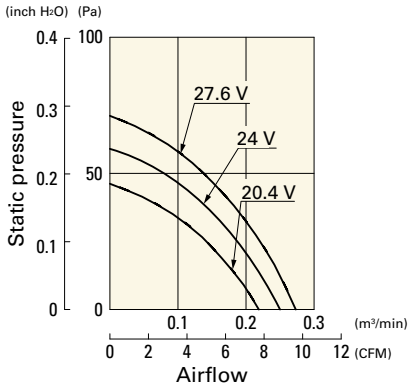

Dimensions (unit: mm)

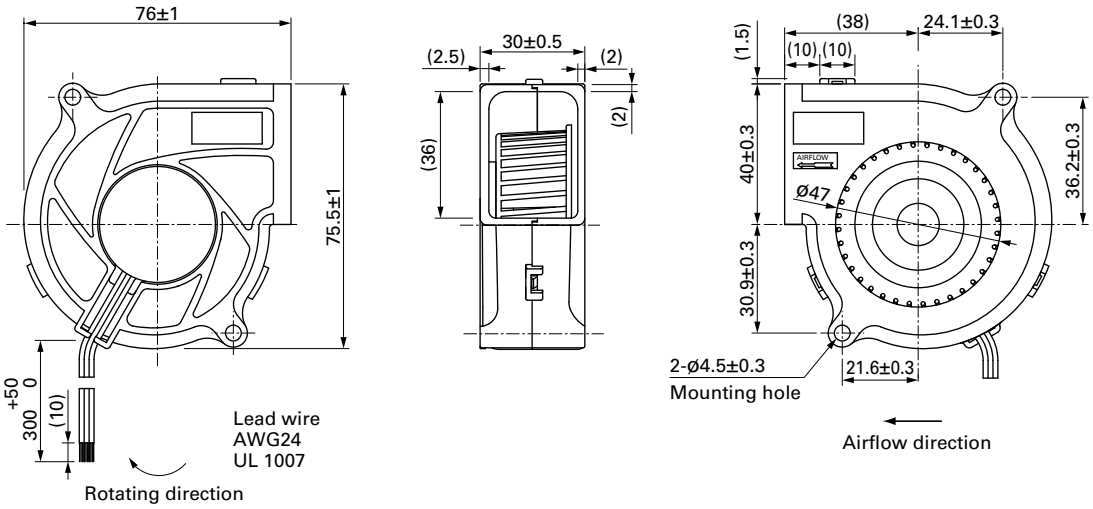

97×33 mm

San Ace B97 9BMC type

General Specifications

- Material ..... Frame: Plastic (Flammability: UL 94V-0), Impeller: Plastic (Flammability: UL 94V-0)
- Expected life ..... See the table below. (L10 life: 90% survival rate for continuous operation in free air at 60˚C, rated voltage) Expected life at 40°C is for reference only.
- Motor protection function ..... Locked rotor burnout protection, Reverse polarity protection For details, please refer to p. 608.
- Dielectric strength ..... 50/60 Hz, 500 VAC, for 1 minute (between lead wire conductors and frame)
- Insulation resistance ..... 10 MΩ min. at 500 VDC (between lead wire conductors and frame)
- Sound pressure level (SPL) ..... A-weighted sound pressure level (SPL) at 1 m away from the air inlet.
- Storage temperature ..... -30 to +70˚C (Non-condensing)
- Lead wire ..... ⊕Red ⊖Black Sensor Yellow Control Brown
- Mass ..... 200 g

Specifications

The models listed below **have a pulse sensor with PWM control.**

Model no.	Rated voltage [V]	Operating voltage range [V]	PWM duty cycle* [%]	Rated current [A]	Rated input [W]	Rated speed [min⁻¹]	Max. airflow [m³/min]	Max. airflow [CFM]	Max. static pressure [Pa]	Max. static pressure [inchH₂O]	SPL [dB (A)]	Operating temperature [˚C]	Expected life [h]
9BMC12P2G001	12	10.8 to 13.2	100	6.2	74.4	8200	1.85	65.3	1950	7.83	69	-20 to +70	40000/60˚C (70000/40˚C)
			20	0.38	4.56	2800	0.58	20.4	121.0	0.48	44		
9BMC24P2G001	24	21.6 to 26.4	100	3.1	74.4	8200	1.85	65.3	1950	7.83	69		
			20	0.19	4.56	2800	0.58	20.4	121.0	0.48	44		

PWM frequency is 25 kHz. Models without ratings for 0% PWM duty cycle have zero speed at 0%. When control terminal is open, speed is the same as at 100% duty cycle.

Note 1: Sensor and control options are available for selection. Refer to the table on p. 636.
Note 2: The » mark indicates Short LeadTime Service applicable models. See p. 664 for details.

Airflow - Static Pressure Characteristics / PWM Duty - Speed Characteristics Example

9BMC12P2G001 With pulse sensor with PWM control

PWM duty cycle

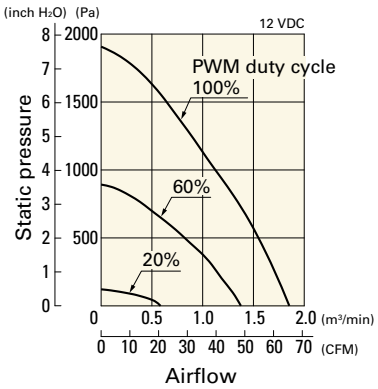

Operating voltage range

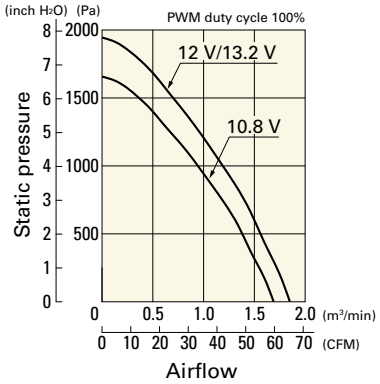

PWM duty - Speed characteristics example

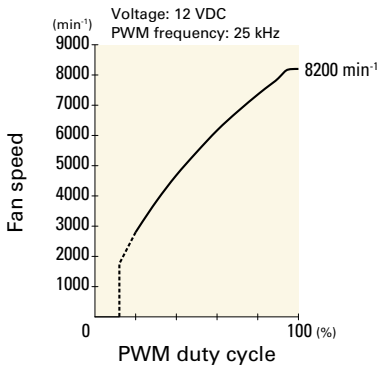

Airflow - Static Pressure Characteristics / PWM Duty - Speed Characteristics Example

9BMC24P2G001 With pulse sensor with PWM control

PWM duty cycle

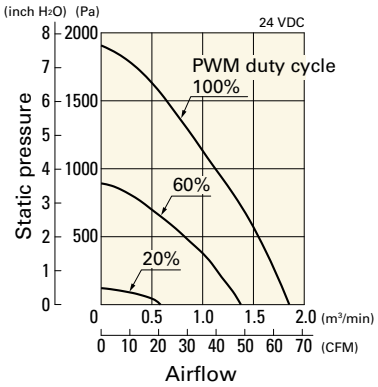

Operating voltage range

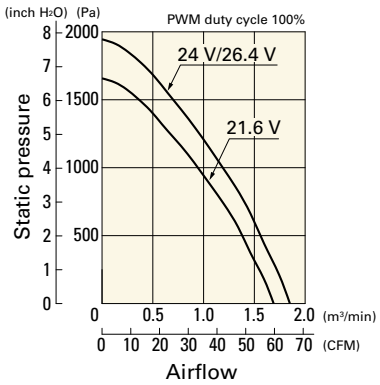

PWM duty - Speed characteristics example

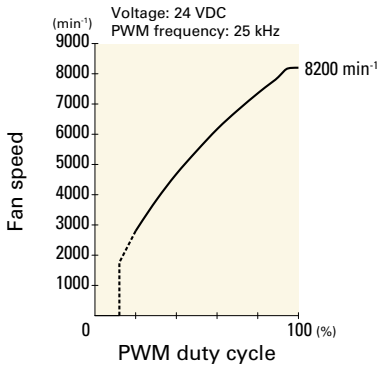

Dimensions (unit: mm)

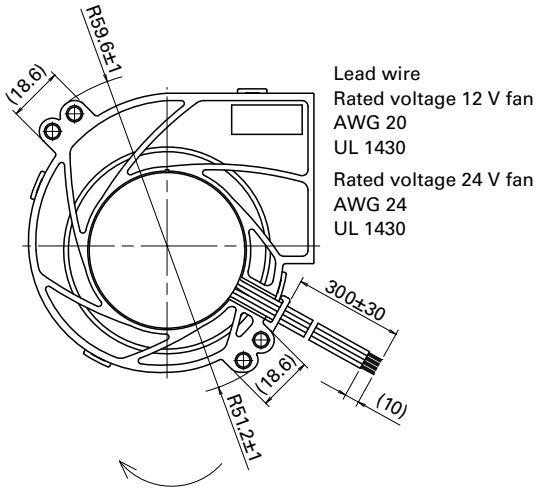

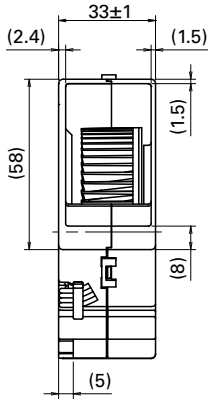

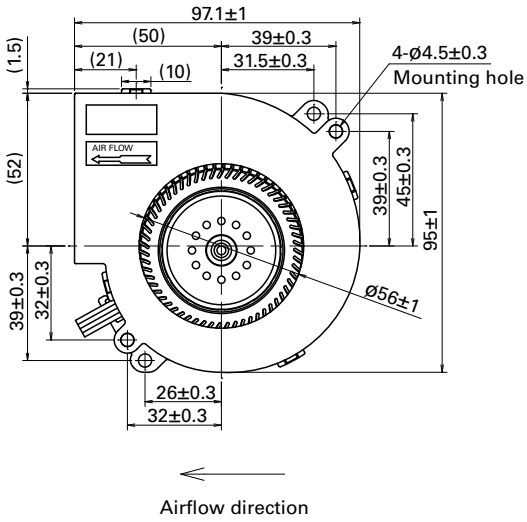

97×33 mm

San Ace B97 9BMB type

General Specifications

- Material ..... Frame: Plastic (Flammability: UL 94V-0), Impeller: Plastic (Flammability: UL 94V-0)
- Expected life ..... See the table below. (L10 life: 90% survival rate for continuous operation in free air at 60˚C, rated voltage) Expected life at 40°C is for reference only.
- Motor protection function ..... Locked rotor burnout protection, Reverse polarity protection For details, please refer to p. 608.
- Dielectric strength ..... 50/60 Hz, 500 VAC, for 1 minute (between lead wire conductors and frame)
- Insulation resistance ..... 10 MΩ min. at 500 VDC (between lead wire conductors and frame)
- Sound pressure level (SPL) ..... A-weighted sound pressure level (SPL) at 1 m away from the air inlet.
- Storage temperature ..... -30 to +70˚C (Non-condensing)
- Lead wire ..... ⊕Red ⊖Black Sensor Yellow Control Brown (For models without PWM control, there is no speed control wiring.)
- Mass ..... 190 g

Specifications

The models listed below **have a pulse sensor with PWM control.**

Model no.	Rated voltage [V]	Operating voltage range [V]	PWM duty cycle* [%]	Rated current [A]	Rated input [W]	Rated speed [min⁻¹]	Max. airflow [m³/min]	Max. airflow [CFM]	Max. static pressure [Pa]	Max. static pressure [inchH₂O]	SPL [dB (A)]	Operating temperature [˚C]	Expected life [h]
9BMB12P2K01	12	10.8 to 13.2	100	3.4	40.8	6850	1.61	56.8	1280	5.14	66	-20 to +70	40000/60˚C (70000/40˚C)
9BMB12P2G01		10.2 to 13.8	100	1.8	21.6	5750	1.34	47.3	760	3.05	61		
9BMB12P2S01			100	1.4	16.8	5250	1.22	43.1	610	2.45	59		
9BMB12P2H01			100	1.1	13.2	4850	1.11	39.2	490	1.968	57		
9BMB12P2F01			100	0.9	10.8	4500	1.04	36.7	410	1.64	56		
9BMB24P2K01	24	21.6 to 26.4	100	1.62	38.88	6850	1.61	56.8	1280	5.14	66		
9BMB24P2G01			100	0.83	19.92	5750	1.34	47.3	760	3.05	61		
9BMB24P2S01			100	0.7	16.8	5250	1.22	43.1	610	2.45	59		
9BMB24P2H01			100	0.55	13.2	4850	1.11	39.2	490	1.968	57		
9BMB24P2F01			100	0.45	10.8	4500	1.04	36.7	410	1.64	56		

PWM frequency is 25 kHz. Models without ratings for 0% PWM duty cycle have zero speed at 0%. When control terminal is open, speed is the same as at 100% duty cycle.

The models listed below **have a pulse sensor.**

Model no.	Rated voltage [V]	Operating voltage range [V]	Rated current [A]	Rated input [W]	Rated speed [min⁻¹]	Max. airflow [m³/min]	Max. airflow [CFM]	Max. static pressure [Pa]	Max. static pressure [inchH₂O]	SPL [dB (A)]	Operating temperature [˚C]	Expected life [h]
9BMB12K201	12	7 to 13.2	3.4	40.8	6850	1.61	56.8	1280	5.14	66	-20 to +70	40000/60˚C (70000/40˚C)
9BMB12G201		7 to 13.8	1.8	21.6	5750	1.34	47.3	760	3.052	61		
9BMB12S201			1.4	16.8	5250	1.22	43.1	610	2.45	59		
9BMB12H201			1.1	13.2	4850	1.11	39.2	490	1.968	57		
9BMB12F201			0.9	10.8	4500	1.04	36.7	410	1.647	56		
9BMB24K201	24	21.6 to 26.4	1.62	38.88	6850	1.61	56.8	1280	5.14	66		
9BMB24G201		12 to 26.4	0.83	19.9	5750	1.34	47.3	760	3.052	61		
9BMB24S201			0.7	16.8	5250	1.22	43.1	610	2.45	59		
9BMB24H201			0.55	13.2	4850	1.11	39.2	490	1.968	57		
9BMB24F201			0.45	10.8	4500	1.04	36.7	410	1.647	56		

Note 1: Sensor and control options are available for selection. Refer to the table on p. 636.
Note 2: The mark indicates Short LeadTime Service applicable models. See p. 664 for details.

Airflow - Static Pressure Characteristics / PWM Duty - Speed Characteristics Example

9BMB12P2K01 With pulse sensor with PWM control

PWM duty cycle

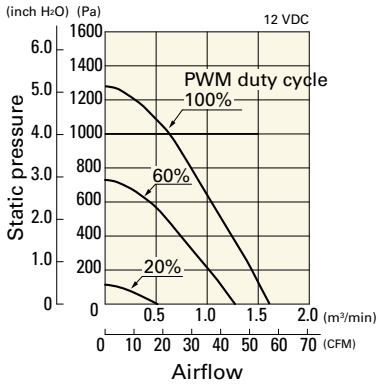

Operating voltage range

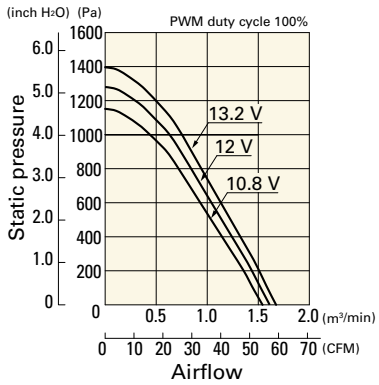

PWM duty - Speed characteristics example

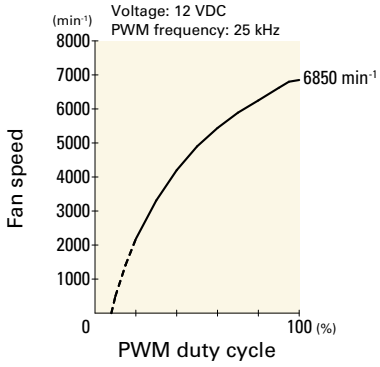

9BMB12P2G01 With pulse sensor with PWM control

PWM duty cycle

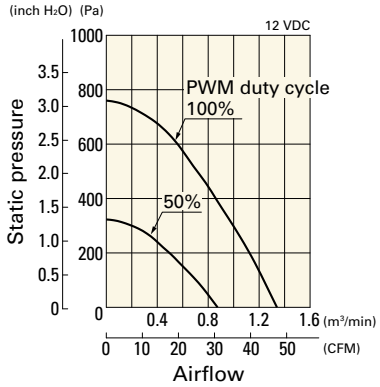

Operating voltage range

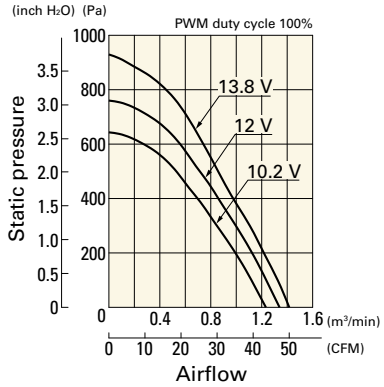

PWM duty - Speed characteristics example

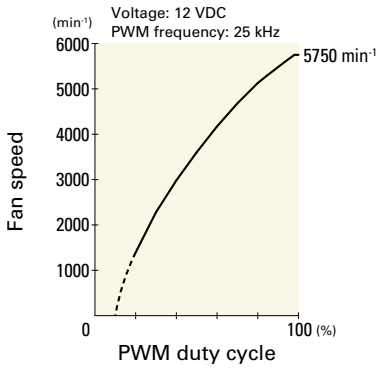

9BMB12P2S01 With pulse sensor with PWM control

PWM duty cycle

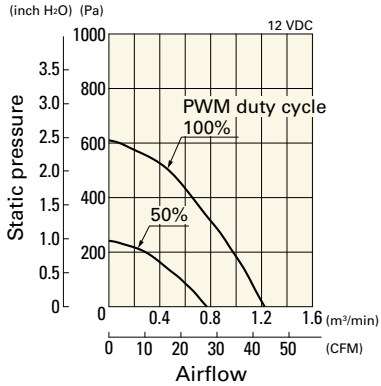

Operating voltage range

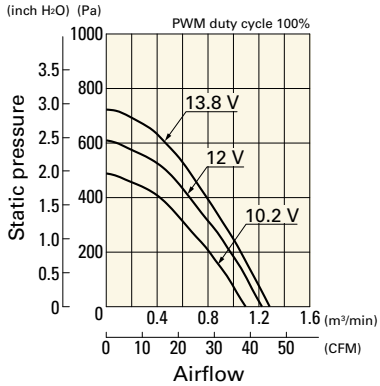

PWM duty - Speed characteristics example

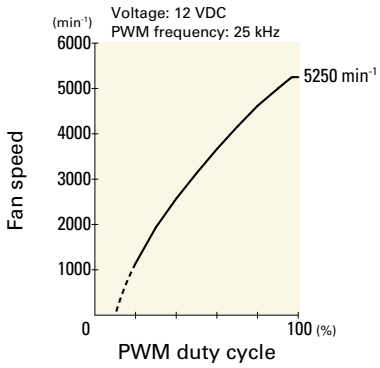

9BMB12P2H01 With pulse sensor with PWM control

PWM duty cycle

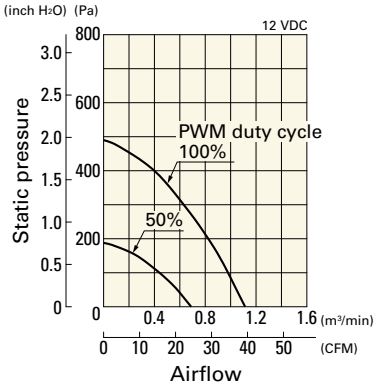

Operating voltage range

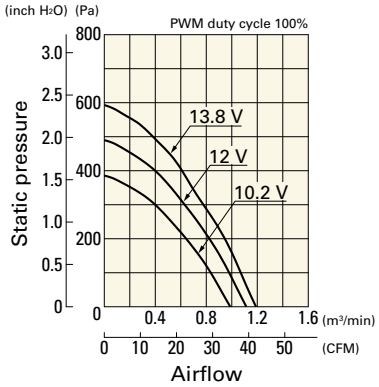

PWM duty - Speed characteristics example

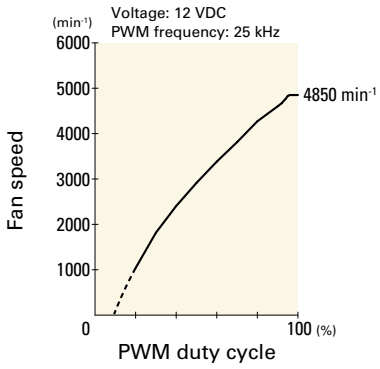

Airflow - Static Pressure Characteristics / PWM Duty - Speed Characteristics Example

9BMB12P2F01 With pulse sensor with PWM control

PWM duty cycle

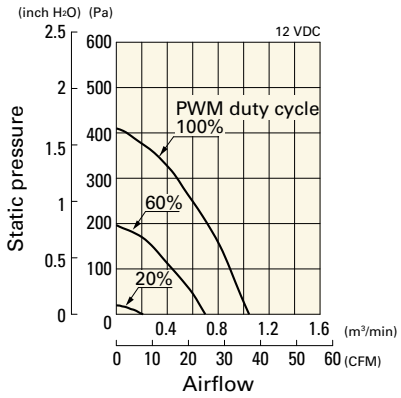

Operating voltage range

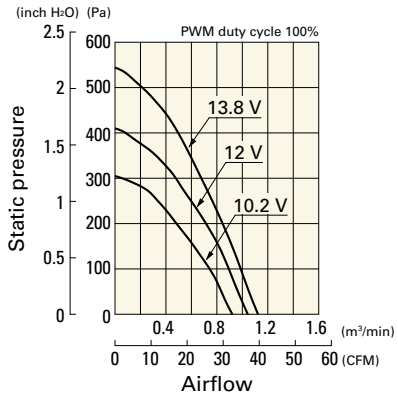

PWM duty - Speed characteristics example

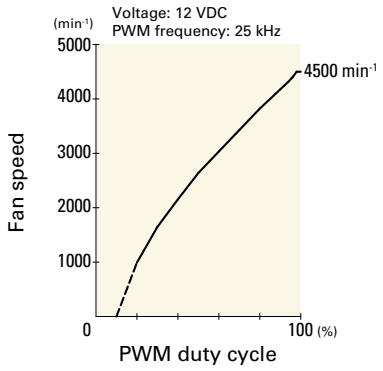

9BMB24P2K01 With pulse sensor with PWM control

PWM duty cycle

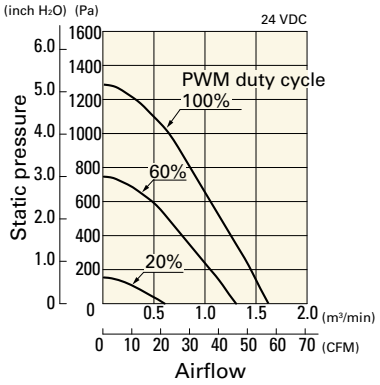

Operating voltage range

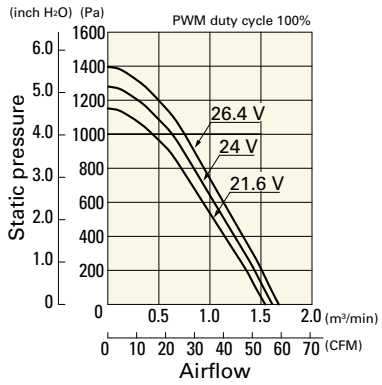

PWM duty - Speed characteristics example

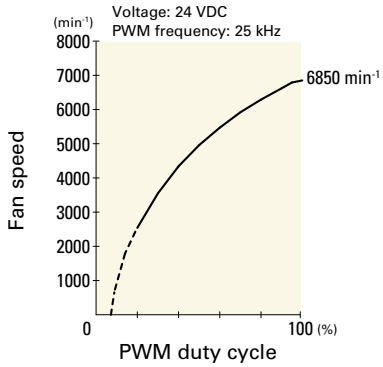

9BMB24P2G01 With pulse sensor with PWM control

PWM duty cycle

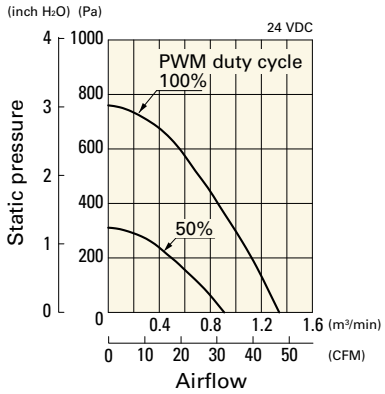

Operating voltage range

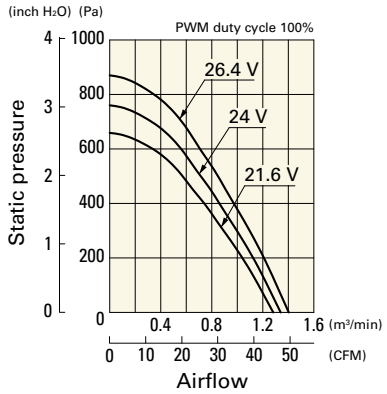

PWM duty - Speed characteristics example

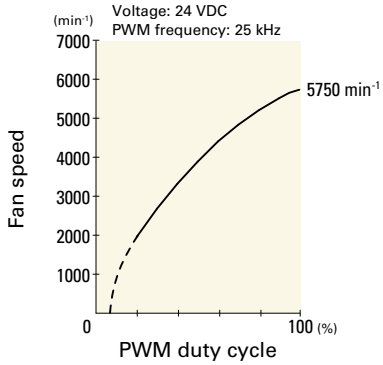

9BMB24P2S01 With pulse sensor with PWM control

PWM duty cycle

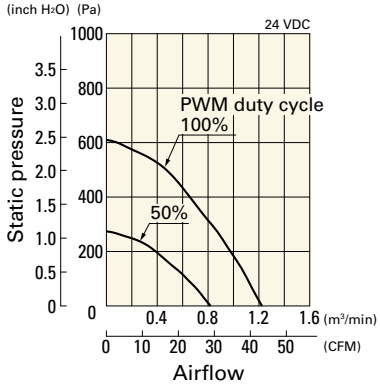

Operating voltage range

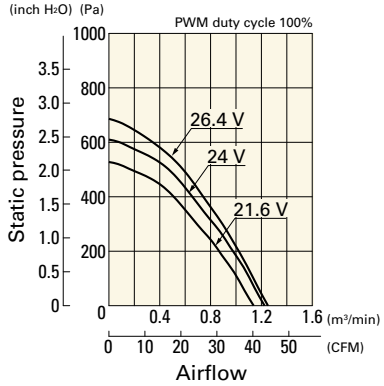

PWM duty - Speed characteristics example

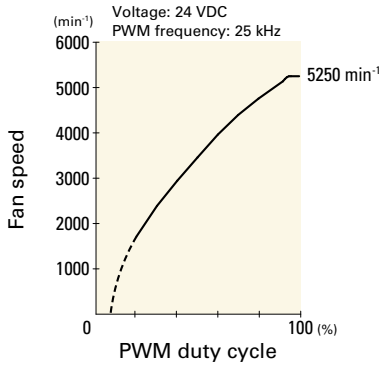

Airflow - Static Pressure Characteristics / PWM Duty - Speed Characteristics Example

9BMB24P2H01 With pulse sensor with PWM control

PWM duty cycle

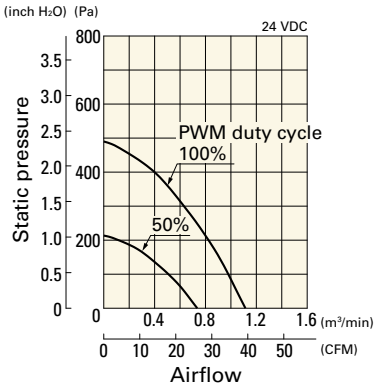

Operating voltage range

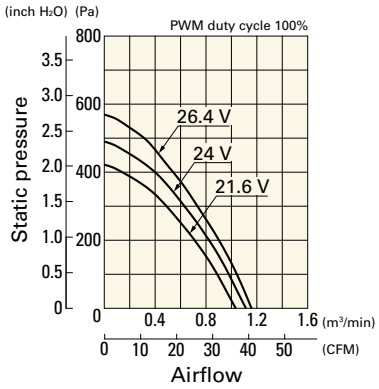

PWM duty - Speed characteristics example

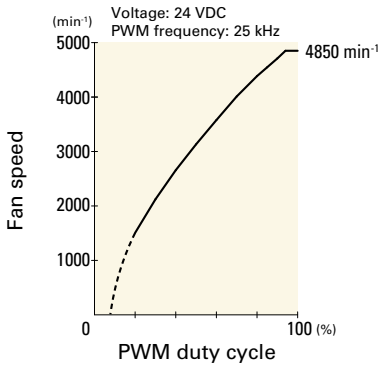

9BMB24P2F01 With pulse sensor with PWM control

PWM duty cycle

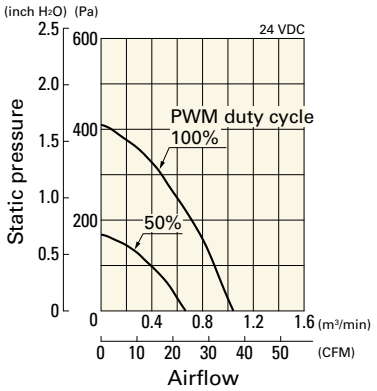

Operating voltage range

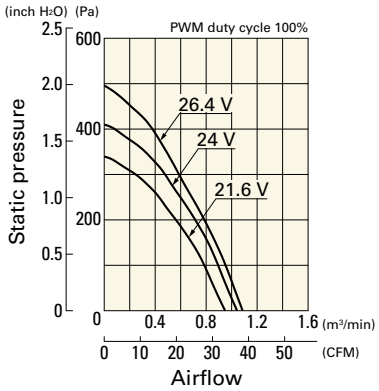

PWM duty - Speed characteristics example

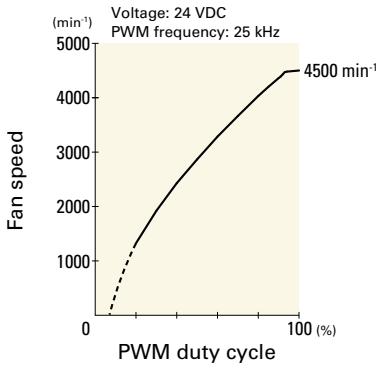

Airflow - Static Pressure Characteristics

9BMB12K201 With pulse sensor

Operating voltage range

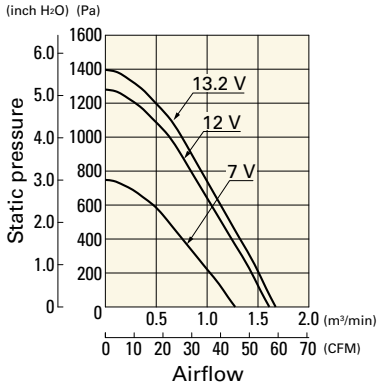

9BMB12G201 With pulse sensor

Operating voltage range

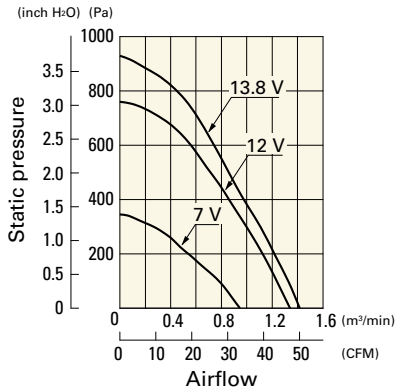

9BMB12S201 With pulse sensor

Operating voltage range

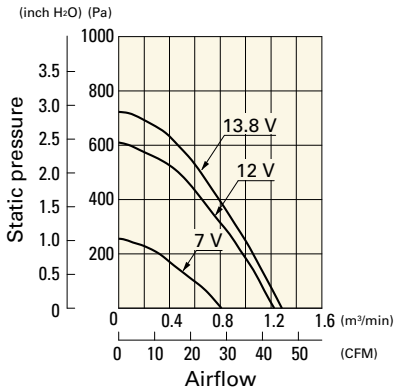

Airflow - Static Pressure Characteristics

9BMB12H201 With pulse sensor

Operating voltage range

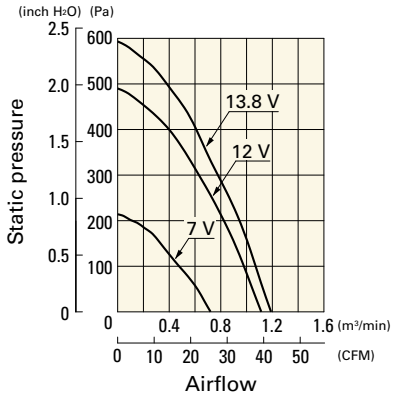

9BMB12F201 With pulse sensor

Operating voltage range

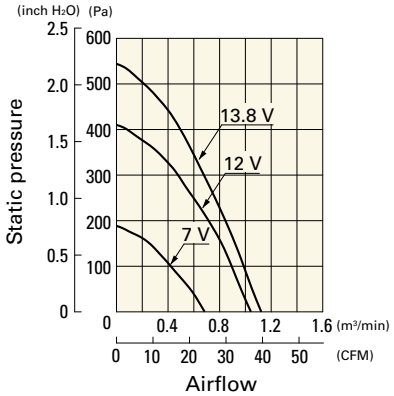

9BMB24K201 With pulse sensor

Operating voltage range

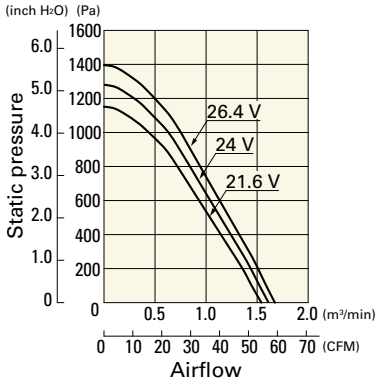

9BMB24G201 With pulse sensor

Operating voltage range

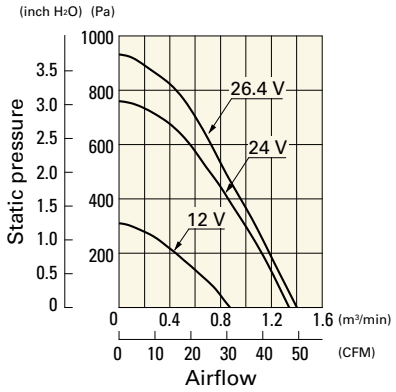

9BMB24S201 With pulse sensor

Operating voltage range

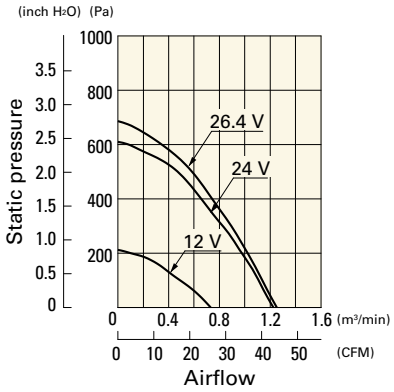

9BMB24H201 With pulse sensor

Operating voltage range

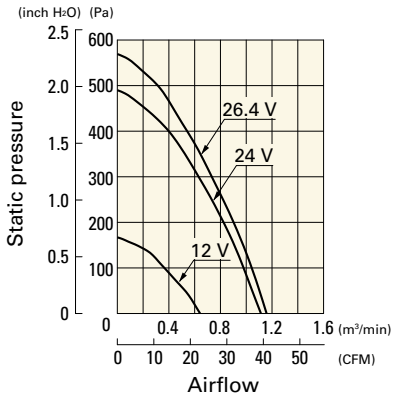

9BMB24F201 With pulse sensor

Operating voltage range

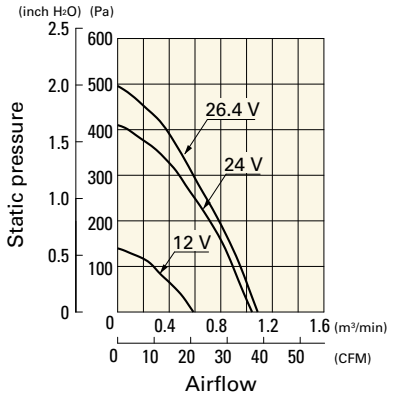

Dimensions (unit: mm) (With pulse sensor with PWM control)

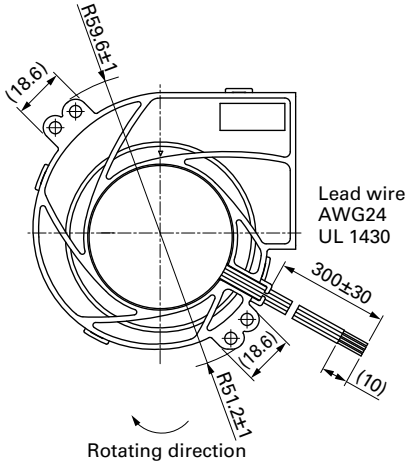

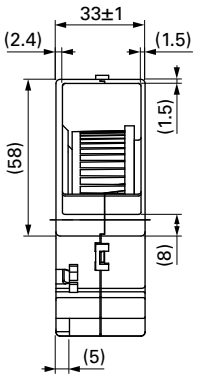

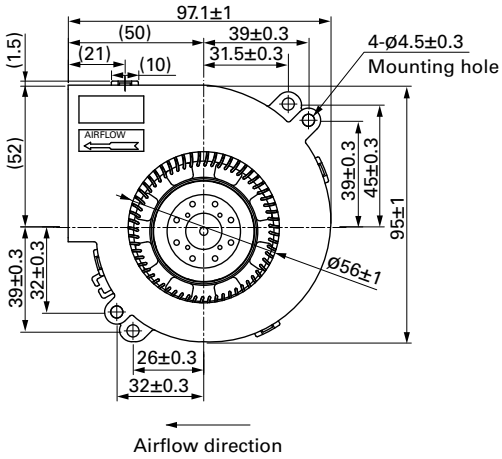

97×33 mm

San Ace B97 9BM type

General Specifications

- Material ..... Frame: Plastic (Flammability: UL 94V-0), Impeller: Plastic (Flammability: UL 94V-0)
- Expected life ..... See the table below. (L10 life: 90% survival rate for continuous operation in free air at 60˚C, rated voltage) Expected life at 40°C is for reference only.
- Motor protection function ..... Locked rotor burnout protection, Reverse polarity protection For details, please refer to p. 608.
- Dielectric strength ..... 50/60 Hz, 500 VAC, for 1 minute (between lead wire conductors and frame)
- Insulation resistance ..... 10 MΩ min. at 500 VDC (between lead wire conductors and frame)
- Sound pressure level (SPL) ..... A-weighted sound pressure level (SPL) at 1 m away from the air inlet.
- Storage temperature ..... -30 to +70˚C (Non-condensing)
- Lead wire ..... ⊕Red ⊖Black Sensor Yellow
- Mass ..... 175 g

Specifications

The models listed below **have a pulse sensor.**

Model no.	Rated voltage [V]	Operating voltage range [V]	Rated current [A]	Rated input [W]	Rated speed [min⁻¹]	Max. airflow [m³/min]	Max. airflow [CFM]	Max. static pressure [Pa]	Max. static pressure [inchH₂O]	SPL [dB (A)]	Operating temperature [˚C]	Expected life [h]
109BM12GC2-1	12	7 to 13.8	0.6	7.2	3800	0.82	28.9	281	1.129	51.5	-20 to +70	40000/60˚C (70000/40˚C)
109BM12HC2-1			0.4	4.8	3300	0.71	25.1	204	0.819	48.5		
109BM12MC2-1			0.26	3.12	2700	0.58	20.5	119	0.478	43.5		
109BM24GC2-1	24	12 to 27.6	0.31	7.44	3800	0.82	28.9	281	1.129	51.5		
109BM24HC2-1			0.26	6.24	3300	0.71	25.1	204	0.819	48.5		
109BM24MC2-1			0.15	3.6	2700	0.58	20.5	119	0.478	43.5		

Note: Sensor and control options are available for selection. Refer to the table on p. 634.

Airflow - Static Pressure Characteristics

109BM12GC2-1 With pulse sensor

Operating voltage range

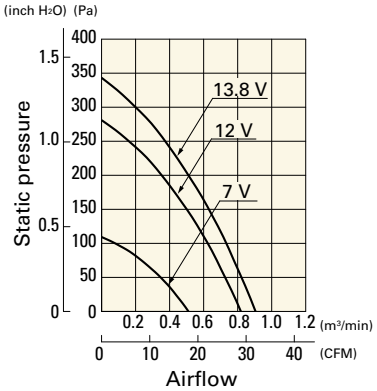

109BM12HC2-1 With pulse sensor

Operating voltage range

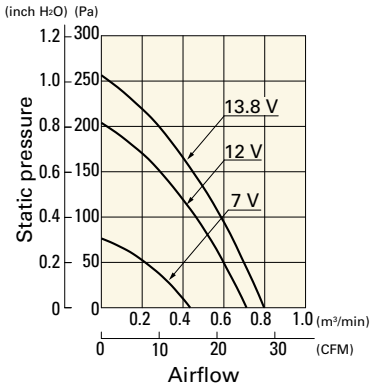

109BM12MC2-1 With pulse sensor

Operating voltage range

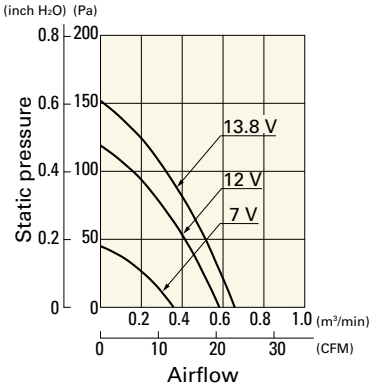

Airflow - Static Pressure Characteristics

109BM24GC2-1 With pulse sensor

Operating voltage range

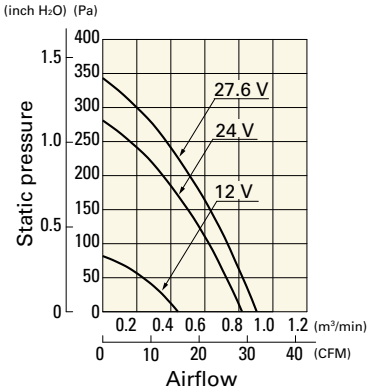

109BM24HC2-1 With pulse sensor

Operating voltage range

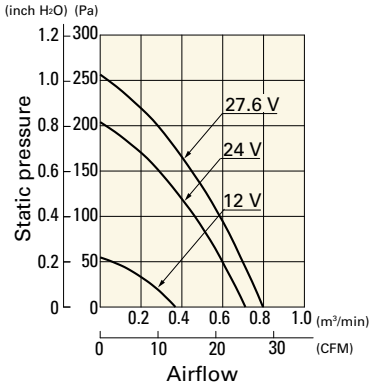

109BM24MC2-1 With pulse sensor

Operating voltage range

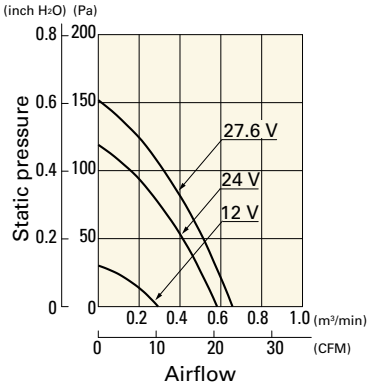

Dimensions (unit: mm)

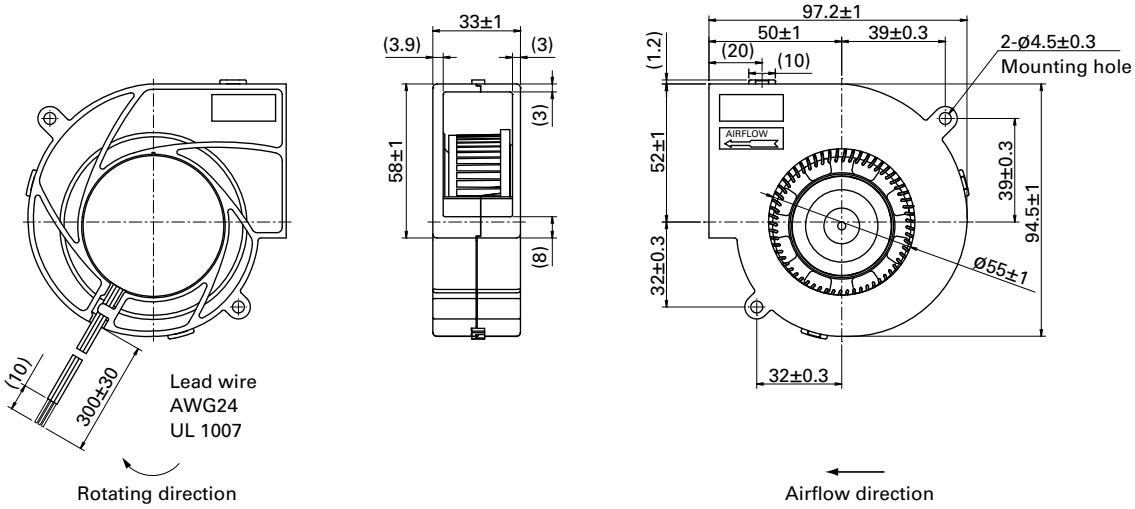

120×32 mm

San Ace B120 9BFB type

General Specifications

- Material ..... Frame: Plastic (Flammability: UL 94V-0), Impeller: Plastic (Flammability: UL 94V-0)
- Expected life ..... See the table below. (L10 life: 90% survival rate for continuous operation in free air at 60˚C, rated voltage) Expected life at 40°C is for reference only.
- Motor protection function ..... Locked rotor burnout protection, Reverse polarity protection For details, please refer to p. 608.
- Dielectric strength ..... 50/60 Hz, 500 VAC, for 1 minute (between lead wire conductors and frame)
- Insulation resistance ..... 10 MΩ min. at 500 VDC (between lead wire conductors and frame)
- Sound pressure level (SPL) ..... A-weighted sound pressure level (SPL) at 1 m away from the air inlet.
- Storage temperature ..... -30 to +70˚C (Non-condensing)
- Lead wire ..... ⊕Red ⊖Black Sensor Yellow Control Brown
- Mass ..... 340 g

Specifications

The models listed below **have a pulse sensor with PWM control.**

Model no.	Rated voltage [V]	Operating voltage range [V]	PWM duty cycle* [%]	Rated current [A]	Rated input [W]	Rated speed [min⁻¹]	Max. airflow [m³/min]	Max. airflow [CFM]	Max. static pressure [Pa]	Max. static pressure [inchH₂O]	SPL [dB (A)]	Operating temperature [˚C]	Expected life [h]
9BFB12P2H003	12	10.8 to 13.2	100	2.3	27.6	3750	1.6	56.5	1250	5.02	62	-20 to +70	40000/60˚C (70000/40˚C)
9BFB24P2H003	24	21.6 to 26.4	100	1.1	26.4	3750	1.6	56.5	1250	5.02	62		
			0	0.12	2.88	1300	0.46	16.2	43	0.17	41		

PWM frequency is 25 kHz. Models without ratings for 0% PWM duty cycle have zero speed at 0%. When control terminal is open, speed is the same as at 100% duty cycle.

Note 1: Sensor and control options are available for selection. Refer to the table on p. 636.
Note 2: The » mark indicates Short Lead Time Service applicable models. See p. 664 for details.

Airflow - Static Pressure Characteristics / PWM Duty - Speed Characteristics Example

9BFB12P2H003 With pulse sensor with PWM control

PWM duty cycle

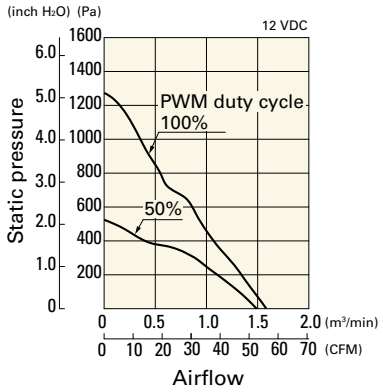

Operating voltage range

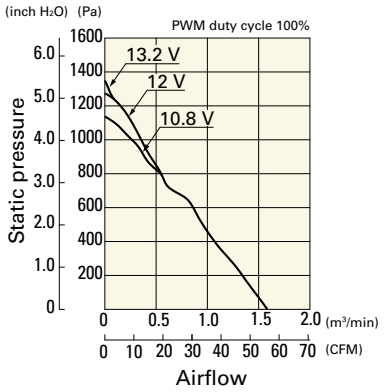

PWM duty - Speed characteristics example

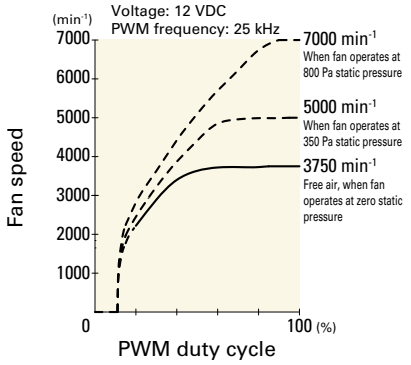

Airflow - Static Pressure Characteristics / PWM Duty - Speed Characteristics Example

9BFB24P2H003 With pulse sensor with PWM control

PWM duty cycle

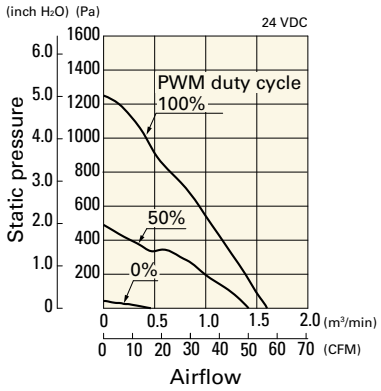

Operating voltage range

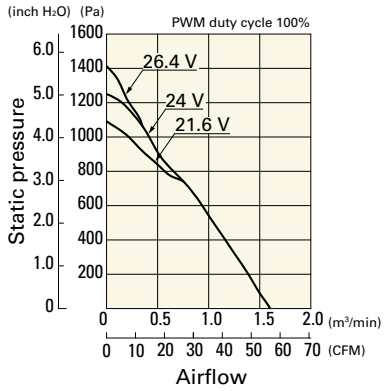

PWM duty - Speed characteristics example

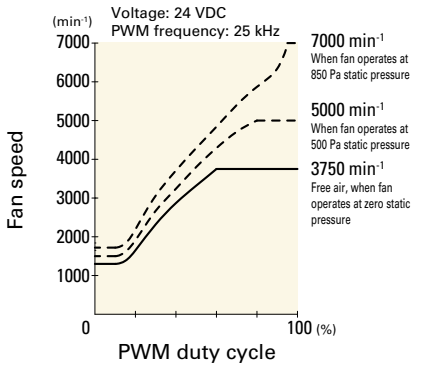

Dimensions (unit: mm)

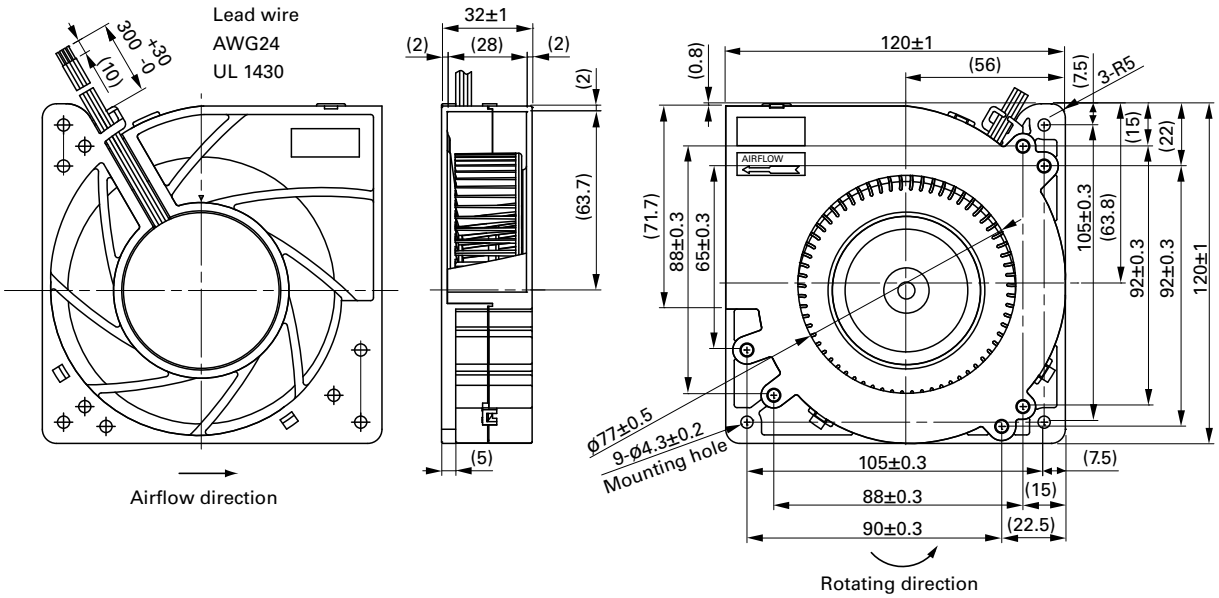

127×32 mm

San Ace B127 9BJ type

General Specifications

- Material ..... Frame: Plastic (Flammability: UL 94V-0), Impeller: Plastic (Flammability: UL 94V-1)
- Expected life ..... See the table below. (L10 life: 90% survival rate for continuous operation in free air at 60˚C, rated voltage) Expected life at 40°C is for reference only.
- Motor protection function ..... Locked rotor burnout protection, Reverse polarity protection For details, please refer to p. 608.
- Dielectric strength ..... 50/60 Hz, 500 VAC, for 1 minute (between lead wire conductors and frame)
- Insulation resistance ..... 10 MΩ min. at 500 VDC (between lead wire conductors and frame)
- Sound pressure level (SPL) ..... A-weighted sound pressure level (SPL) at 1 m away from the air inlet.
- Storage temperature ..... -30 to +70˚C (Non-condensing)
- Lead wire ..... ⊕Red ⊖Black or Blue Sensor Yellow
- Mass ..... 290 g

Specifications

The models listed below **have a pulse sensor.**

Model no.	Rated voltage [V]	Operating voltage range [V]	Rated current [A]	Rated input [W]	Rated speed [min⁻¹]	Max. airflow [m³/min]	Max. airflow [CFM]	Max. static pressure [Pa]	Max. static pressure [inchH₂O]	SPL [dB (A)]	Operating temperature [˚C]	Expected life [h]
109BJ12HC2	12	10.2 to 13.8	0.52	6.24	2400	0.78	27.5	205.8	0.826	46	-20 to +70	40000/60˚C (70000/40˚C)
109BJ12MC2			0.29	3.48	1900	0.61	21.5	109.8	0.441	40		
109BJ24HC2	24	20.4 to 27.6	0.26	6.24	2400	0.78	27.5	205.8	0.826	46	-20 to +60	
109BJ24MC2			0.15	3.6	1900	0.61	21.5	109.8	0.441	40		

Note 1: Sensor and control options are available for selection. Refer to the table on p. 634.
Note 2: The » mark indicates Short Lead Time Service applicable models. See p. 664 for details.

Airflow - Static Pressure Characteristics

109BJ12HC2 With pulse sensor

Operating voltage range

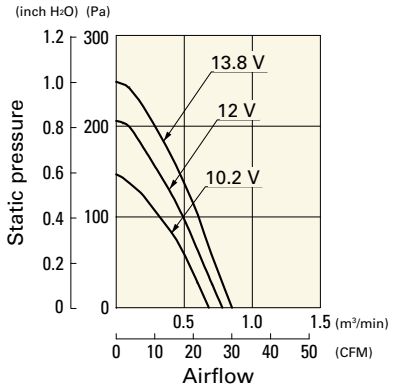

109BJ12MC2 With pulse sensor

Operating voltage range

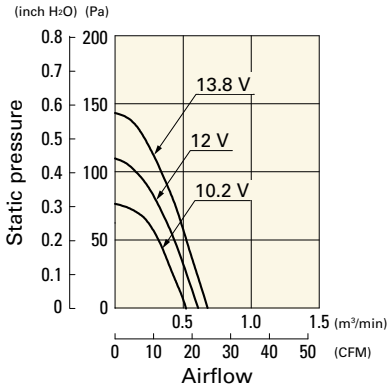

109BJ24HC2 With pulse sensor

Operating voltage range

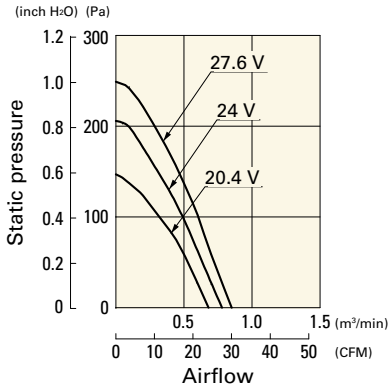

Airflow - Static Pressure Characteristics

109BJ24MC2 With pulse sensor

Operating voltage range

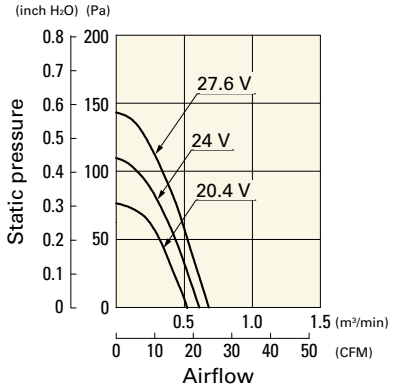

Dimensions (unit: mm)

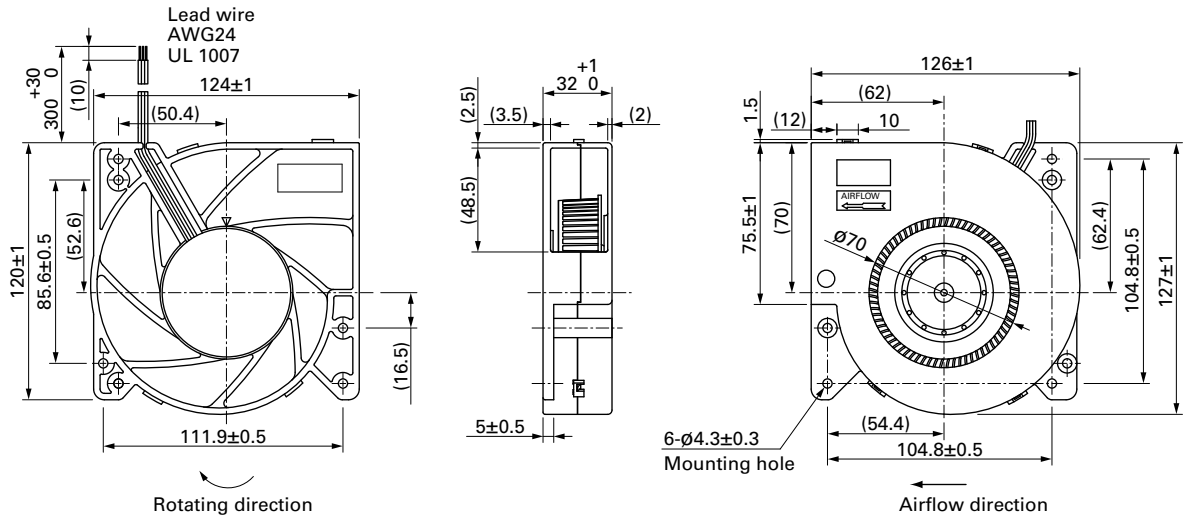

160×40 mm

San Ace B160 9BG type

General Specifications

- Material ..... Frame: Plastic (Flammability: UL 94V-0), Impeller: Plastic (Flammability: UL 94V-1)
- Expected life ..... See the table below. (L10 life: 90% survival rate for continuous operation in free air at 60˚C, rated voltage) Expected life at 40°C is for reference only.
- Motor protection function ..... Locked rotor burnout protection, Reverse polarity protection For details, please refer to p. 608.
- Dielectric strength ..... 50/60 Hz, 500 VAC, for 1 minute (between lead wire conductors and frame)
- Insulation resistance ..... 10 MΩ min. at 500 VDC (between lead wire conductors and frame)
- Sound pressure level (SPL) ..... A-weighted sound pressure level (SPL) at 1 m away from the air inlet.
- Storage temperature ..... -30 to +70˚C (Non-condensing)
- Lead wire ..... ⊕Red ⊖Black or Blue Sensor Yellow
- Mass ..... 580 g

Specifications

The models listed below **have a pulse sensor.**

Model no.	Rated voltage [V]	Operating voltage range [V]	Rated current [A]	Rated input [W]	Rated speed [min⁻¹]	Max. airflow [m³/min]	Max. airflow [CFM]	Max. static pressure [Pa]	Max. static pressure [inchH₂O]	SPL [dB (A)]	Operating temperature [˚C]	Expected life [h]
109BG12HC1	12	10.2 to 13.8	1.3	15.6	2300	1.62	57.2	313.6	1.259	55	-20 to +60	40000/60˚C (70000/40˚C)
109BG12MC1			0.64	7.68	1800	1.26	44.5	156.8	0.629	50		
109BG24HC1	24	20.4 to 27.6	0.62	14.88	2300	1.62	57.2	313.6	1.259	55		
109BG24MC1			0.31	7.44	1800	1.26	44.5	156.8	0.629	50		

Note 1: Sensor and control options are available for selection. Refer to the table on p. 634.
Note 2: The » mark indicates Short Lead Time Service applicable models. See p. 664 for details.

Airflow - Static Pressure Characteristics

109BG12HC1 With pulse sensor

Operating voltage range

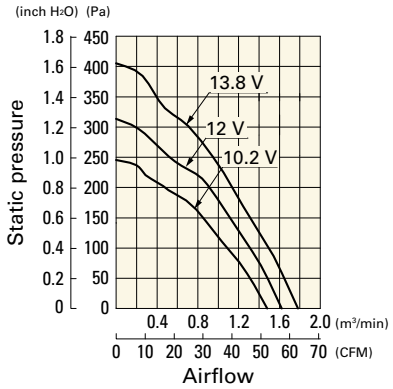

109BG12MC1 With pulse sensor

Operating voltage range

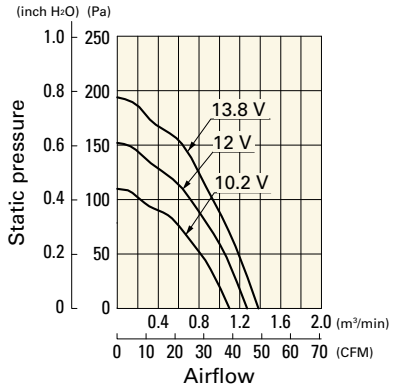

109BG24HC1 With pulse sensor

Operating voltage range

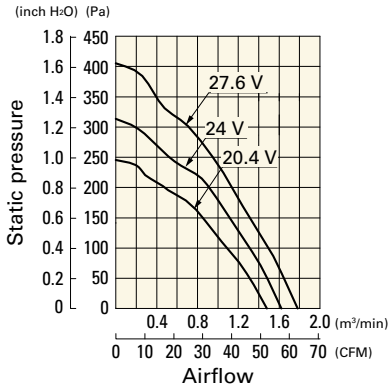

Airflow - Static Pressure Characteristics

109BG24MC1 With pulse sensor

Operating voltage range

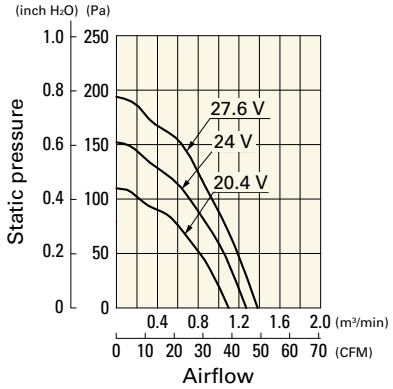

Dimensions (unit: mm)

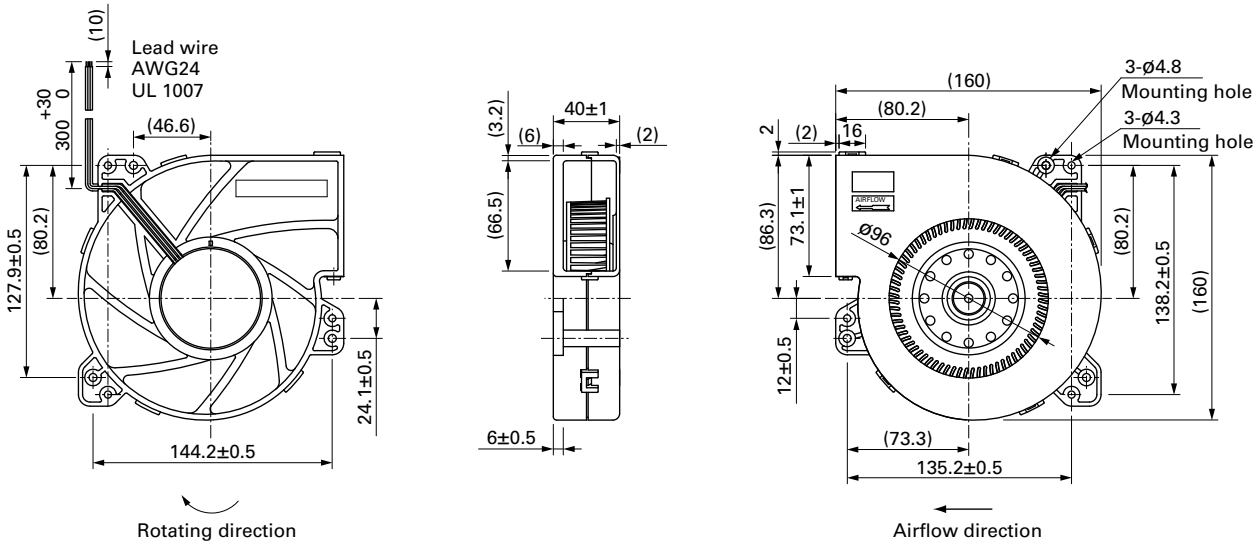

ACDC Fan

This fan works while internally converting AC power into DC power, providing the superior performance of a DC fan with the flexibility of AC input.

Model Numbering System

Not every combination of the following codes or characters is available. Contact us for an available combination.

9AD	09	01	H	1	2	
Type name	Frame size	Voltage	Speed code	Frame thickness	Sensor specifications	Frame form

Fans with PWM control

9AD	12	01	P	4	H	001	
Type name	Frame size	Voltage	PWM control	Frame thickness	Speed code	Individual customer's spec (2 to 3 digits)	Frame form

Type name	9AD 9ADA 9ADAW 9ADW			
Frame size (mm)	09 92×92	12 120×120	16 160×160	57 ø172×150 (sidecut)
Voltage (V)	01 100 to 240			
Speed code	H M etc.			
Frame thickness (mm)	1 38	4 25	5 51	
Sensor specifications	001, 003, T03 With a pulse sensor	002, 2, T02 Without a sensor	H, H001, HT01 With a low-speed sensor	
Frame form	Nil Plastic frame: Ribbed frame	1 Plastic frame: Ribless frame		

Centrifugal Fan

9ADT	S	11	P	0	G	001
Type name	Impeller size	Voltage	PWM control	Thickness	Speed code	Individual customer's spec

Bracket-mounted Splash Proof Centrifugal Fan

9ADB1T	S	11	P	0	G	001
Type name	Impeller size	Voltage	PWM control	Thickness	Speed code	Individual customer's spec

Type name	9ADT 9ADW1T 9ADB1T 9ADB1W1T			
Impeller size (mm)	S ø225			
Voltage (V)	11 115	23 230		
Thickness (mm)	0 69 min.			
Speed code	G H etc.			

How to Read Specifications (ACDC fan)

The following is a sample. See respective product pages for detailed information.

Model no.	Rated voltage [V]	Operating voltage range [V]	Frequency [Hz]	Rated current [A]	Rated input [W]	Rated speed [min⁻¹]	Max. airflow [m³/min]	Max. airflow [CFM]	Max. static pressure [Pa]	Max. static pressure [inchH₂O]	SPL [dB (A)]	Operating temperature [°C]	Expected life [h]
9AD0901H12	100 to 240	90 to 264	50/60	0.08	4.5	3850	1.5	53.0	90	0.36	40	-20 to +75	60000/60°C (90000/40°C)
9AD0901M12				0.06	3.0	3100	1.18	41.7	56	0.22	33		

Rated voltage ····· This is the necessary voltage to drive the fan. Single-phase 100 to 240 VAC are also available.
Operating voltage range ····· The voltage range over which fan operation is guaranteed.
Frequency ····· This is a frequency of alternating current (AC). The frequencies of 50 Hz and 60 Hz are existing in Japan.
Rated current ····· The current when the fan is operating at rated voltage (at free air).
Rated input ····· The power value when the fan is operating at rated voltage (at free air).
Rated speed ····· The speed when the fan is operating at rated voltage (at free air).
Max. airflow ····· The airflow at 0 Pa static pressure when the fan is operating at rated voltage. (Measured using the double chamber method)
Max. static pressure ····· The static pressure at 0 m³/min airflow when the fan is operating at rated voltage. (Measured using the double chamber method)
SPL ····· A-weighted sound pressure level (SPL) when the fan operates at the rated speed.
For the measurement method, see the Technical Materials section in the catalog.
Operating temperature ····· The temperature range over which fan operation is guaranteed (Non-condensing).
Expected life ····· Service life hours that 90% of bearings will survive without failing when continuously operated at the rated voltage and 60°C temperature. Expected life at 40°C is for reference only.
For more information, please refer to the technical material section.

92×92×38 mm

San Ace 92AD 9AD type

General Specifications

- Material ..... Frame: Plastic (Flammability: UL 94V-0), Impeller: Plastic (Flammability: UL 94V-0)
- Expected life ..... See the table below. (L10 life: 90% survival rate for continuous operation in free air at 60˚C, rated voltage) Expected life at 40°C is for reference only.
- Motor structure ..... Brushless DC motor
- Motor protection function ..... Locked rotor burnout protection For details, please refer to p. 608.
- Dielectric strength ..... 50/60 Hz, 4000 VAC, for 1 minute (between input terminal and frame) 50/60 Hz, 2500 VAC, for 1 second (between input terminal and sensor output)
- Insulation resistance ..... 10 MΩ min. at 500 VDC (between lead wire conductors and frame)
- Sound pressure level (SPL) ..... A-weighted sound pressure level (SPL) at 1 m away from the air inlet.
- Storage temperature ..... -30 to +75˚C (Non-condensing)
- Mass ..... 250 g

Do not solder wires directly to AC input terminals.

Specifications

The models listed below **have ribs and no sensor.** For models without ribs, append "1" to the end of model numbers.

Model no.	Rated voltage [V]	Operating voltage range [V]	Frequency [Hz]	Rated current [A]	Rated input [W]	Rated speed [min⁻¹]	Max. airflow [m³/min]	Max. airflow [CFM]	Max. static pressure [Pa]	Max. static pressure [inchH₂O]	SPL [dB (A)]	Operating temperature [˚C]	Expected life [h]
9AD0901H12	100 to 240	90 to 264	50/60	0.08	4.5	3850	1.5	53.0	90	0.36	40	-20 to +75	60000/60˚C (90000/40˚C)
9AD0901M12				0.06	3.0	3100	1.18	41.7	56	0.22	33		

The models listed below **have ribs and a low-speed sensor.** For models without ribs, append "1" to the end of model numbers.

Model no.	Rated voltage [V]	Operating voltage range [V]	Frequency [Hz]	Rated current [A]	Rated input [W]	Rated speed [min⁻¹]	Max. airflow [m³/min]	Max. airflow [CFM]	Max. static pressure [Pa]	Max. static pressure [inchH₂O]	SPL [dB (A)]	Operating temperature [˚C]	Expected life [h]
9AD0901H1H	100 to 240	90 to 264	50/60	0.08	4.5	3850	1.5	53.0	90	0.36	40	-20 to +75	60000/60˚C (90000/40˚C)
9AD0901M1H				0.06	3.0	3100	1.18	41.7	56	0.22	33		

Note: The » mark indicates Short Lead Time Service applicable models. See p. 664 for details.

Set Models

Fan, finger guard, plug cord, screws, etc. can be purchased in one package. For details, please refer to p. 665.

Order no.	Set items					
	Fan (1 pc)	Voltage	Low-speed sensor	Plug cord (1 pc)	Finger guard (1 pc)	Screws with hex nuts (4 pairs)
ST1-9AD0901H12	9AD0901H12	100 to 240 V		489-1635-L10	109-099E	M4×55 mm
ST1-9AD0901M12	9AD0901M12			489-1635-L10	109-099E	
ST1-9AD0901H1H	9AD0901H1H		◯	489-1635-L10	109-099E	
ST1-9AD0901M1H	9AD0901M1H		◯	489-1635-L10	109-099E	

Airflow - Static Pressure Characteristics

9AD0901H12, 9AD0901H1H

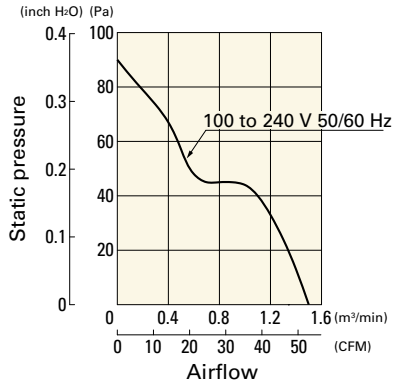

9AD0901M12, 9AD0901M1H

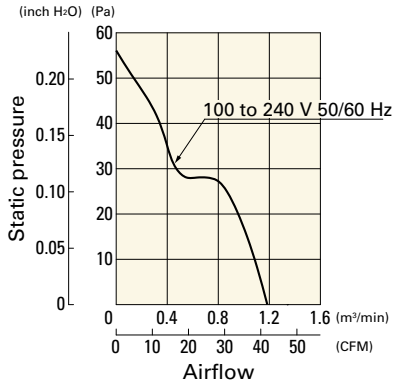

Connection Schematic

without Sensor

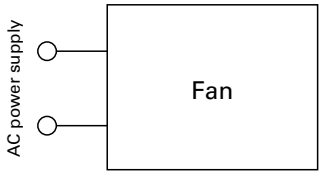

with Low-speed sensor

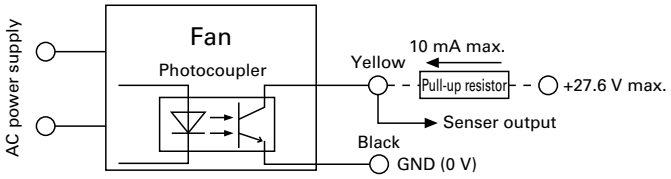

Dimensions (unit: mm) (With ribs)

without Sensor

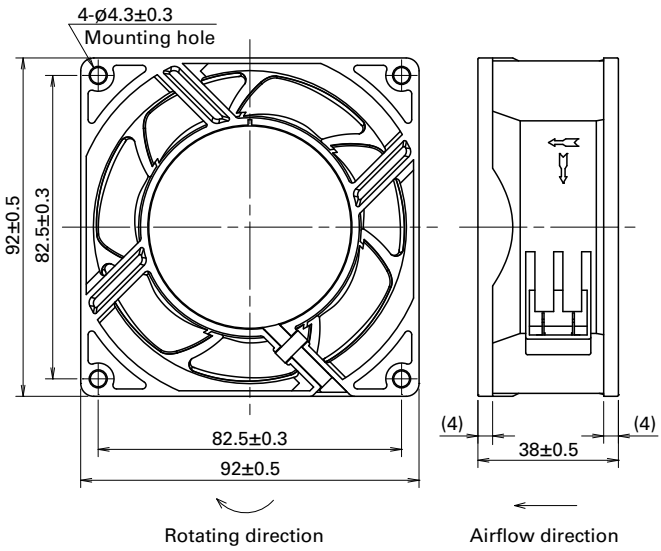

with Low-speed sensor

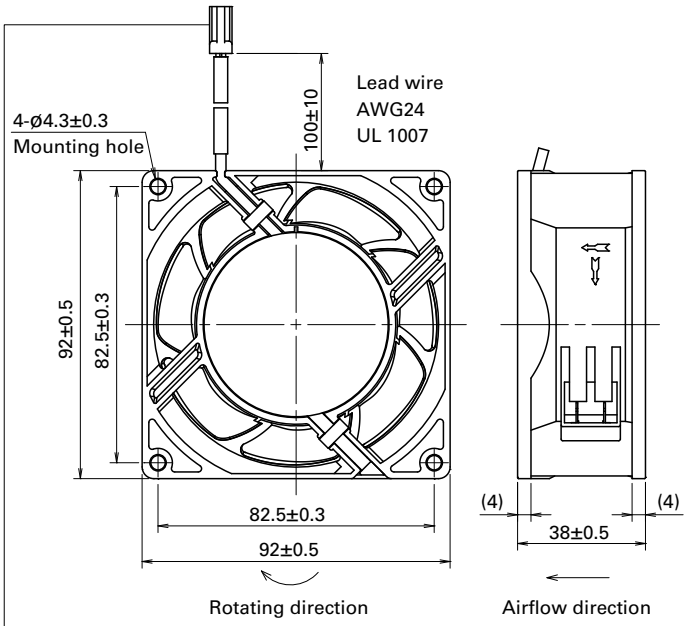

Connector: TE Connectivity 171822-2
(Pin1 Sensor output: Yellow Pin2 -: Black)
Contact: TE Connectivity 170262-1

Note: Recommended connectors and contacts are listed below.
Connector: TE Connectivity 172211-2
Contact: TE Connectivity 170376-1

Reference Dimensions of Mounting Holes and Vent Opening (unit: mm)

Inlet side

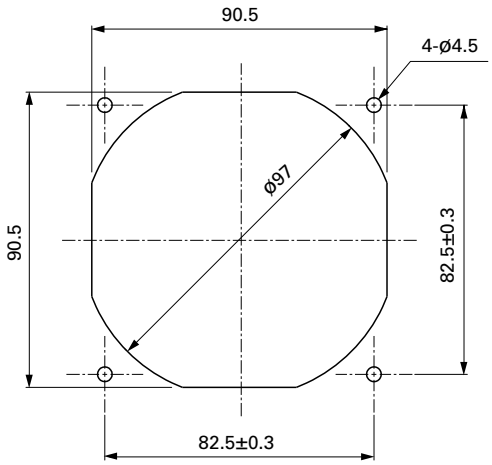

Outlet side

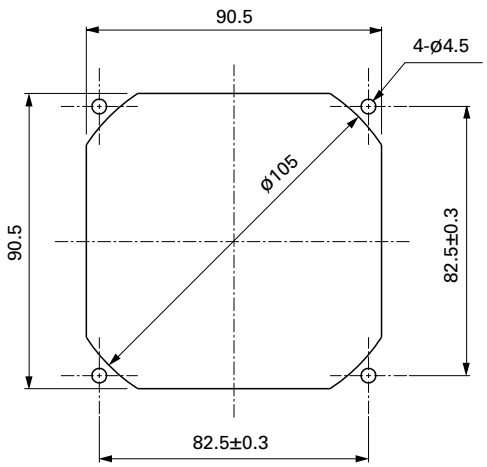

Options

Finger guards
page: p. 591

Model no.: 109-099E, 109-099H

Resin filter kits
page: p. 598

Model no.: 109-1001F13 (13PPI), 109-1001F20 (20PPI),
109-1001F30 (30PPI), 109-1001F40 (40PPI)

Sensor extension wiring harness
page: p. 603

Model no.: 489-1636

Resin finger guards
page: p. 597

Model no.: 109-1001G

Plug cord
page: p. 603

Model no.: 489-1635-L10, 489-1635-L21

Errata sheet

ACDC Fan

120×120×25 mm

San Ace 120AD 9AD type

General Specifications

- Material ..... Frame: Plastic (Flammability: UL 94V-0), Impeller: Plastic (Flammability: UL 94V-0)
- Expected life ..... See the table below. (L10 life: 90% survival rate for continuous operation in free air at 60˚C, rated voltage) Expected life at 40°C is for reference only.
- Motor protection function ..... Locked rotor burnout protection For details, please refer to p. 608.
- Dielectric strength ..... 50/60 Hz, 2500 VAC, for 1 second (between lead wire conductors and frame) 50/60 Hz, 1500 VAC, for 1 minute (between input lead wire (L, N) conductors and other lead wire conductors)
- Insulation resistance ..... 10 MΩ min. at 500 VDC (between lead wire conductors and frame, between input lead wire (L, N) conductors and other lead wire conductors)
- Sound pressure level (SPL) ..... A-weighted sound pressure level (SPL) at 1 m away from the air inlet.
- Storage temperature ..... -30 to +70˚C (Non-condensing)
- Lead wire ..... AC power input L: Orange N: Gray Sensor Yellow Control Brown GND Black (For models without sensors, there is no sensor or control wiring.)
- Mass ..... 180 g

Take safety measures not to touch this product (including lead wires) while the power is on.
Please ensure appropriate insulation within the final product because of functional insulation between input leads wire (L, N) and other lead wire conductors.
To display CE mark/UKCA mark on system, refer to p. 613.

Specifications

The models listed below **have ribs and no sensor.** For models without ribs, append "1" to the end of model numbers.

Model no.	Rated voltage [V]	Operating voltage range [V]	Frequency [Hz]	Rated current [A]	Rated input [W]	Rated speed [min⁻¹]	Max. airflow [m³/min]	Max. airflow [CFM]	Max. static pressure [Pa]	Max. static pressure [inchH₂O]	SPL [dB (A)]	Operating temperature [˚C]	Expected life [h]
9AD1201H4002	100 to 240	90 to 264	50/60	0.06	3.4	3000	2.35	83	62	0.249	40	-20 to +70	60000/60˚C (90000/40˚C)
9AD1201M4002				0.04	1.6	2250	1.76	62	35	0.140	34		
9AD1201L4002				0.03	1.1	1800	1.41	49	22	0.088	26		

The models listed below **have ribs and a low-speed sensor.** For models without ribs, append "1" to the end of model numbers.

Model no.	Rated voltage [V]	Operating voltage range [V]	Frequency [Hz]	Rated current [A]	Rated input [W]	Rated speed [min⁻¹]	Max. airflow [m³/min]	Max. airflow [CFM]	Max. static pressure [Pa]	Max. static pressure [inchH₂O]	SPL [dB (A)]	Operating temperature [˚C]	Expected life [h]
9AD1201H4H001	100 to 240	90 to 264	50/60	0.06	3.4	3000	2.35	83	62	0.249	40	-20 to +70	60000/60˚C (90000/40˚C)
9AD1201M4H001				0.04	1.6	2250	1.76	62	35	0.140	34		
9AD1201L4H001				0.03	1.1	1800	1.41	49	22	0.088	26		

The models listed below **have ribs and a pulse sensor with PWM control.** For models without ribs, append "1" to the end of model numbers.

Model no.	Rated voltage [V]	Operating voltage range [V]	Frequency [Hz]	PWM duty cycle* [%]	Rated current [A]	Rated input [W]	Rated speed [min⁻¹]	Max. airflow [m³/min]	Max. airflow [CFM]	Max. static pressure [Pa]	Max. static pressure [inchH₂O]	SPL [dB (A)]	Operating temperature [˚C]	Expected life [h]
9AD1201P4H001	100 to 240	90 to 264	50/60	100	0.06	3.4	3000	2.35	83	62	0.249	40	-20 to +70	60000/60˚C (90000/40˚C)
				30	0.02	0.7	900	0.7	24.7	6.6	0.03	14		

PWM frequency is 25 kHz. Models without ratings for 0% PWM duty cycle have zero speed at 0%. When control terminal is open, speed is the same as at 100% duty cycle.

Note: The mark indicates Short Lead Time Service applicable models. See p. 664 for details.

Airflow - Static Pressure Characteristics

9AD1201H4002
No sensor

Operating voltage range

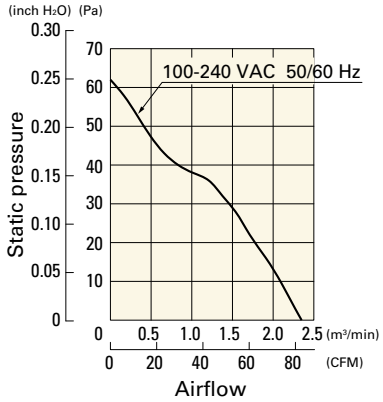

9AD1201M4002
No sensor

Operating voltage range

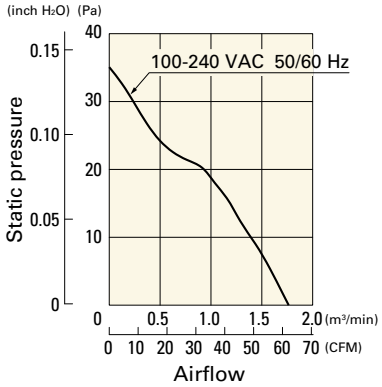

9AD1201L4002
No sensor

Operating voltage range

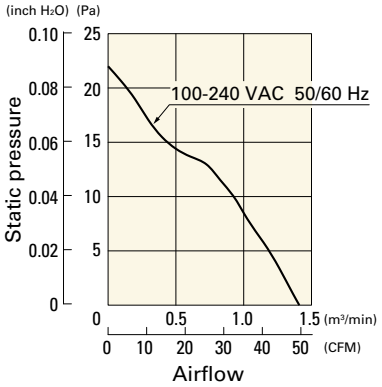

9AD1201H4H001
With low-speed sensor

Operating voltage range

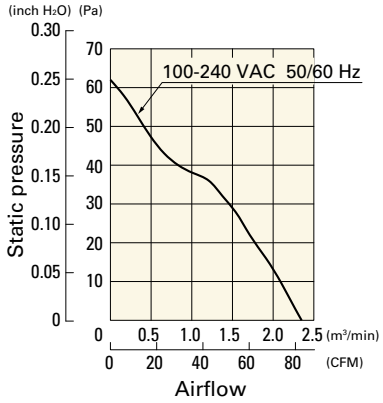

9AD1201M4H001
With low-speed sensor

Operating voltage range

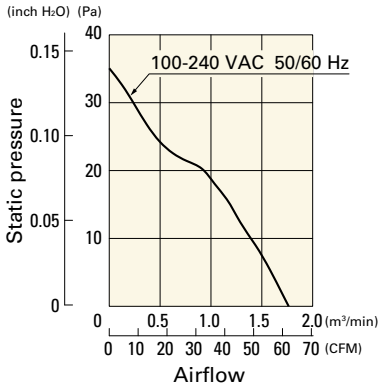

9AD1201L4H001
With low-speed sensor

Operating voltage range

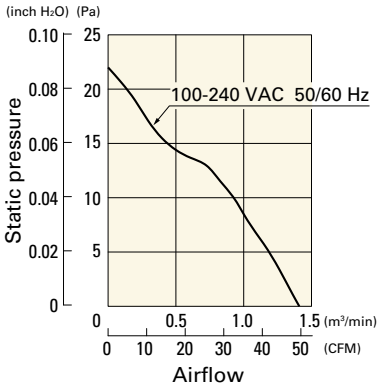

Airflow - Static Pressure Characteristics / PWM Duty - Speed Characteristics Example

9AD1201P4H001 With pulse sensor with PWM control

PWM duty cycle

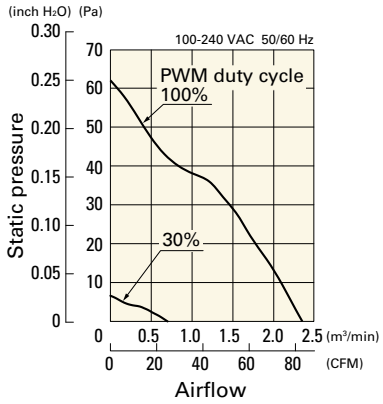

PWM duty - Speed characteristics example

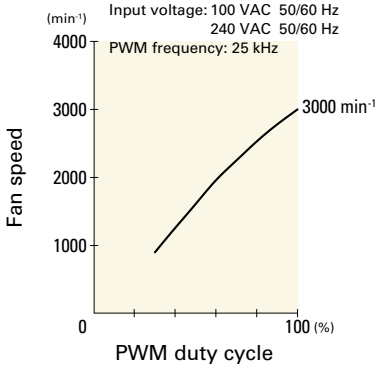

Connection Schematic

without Sensor

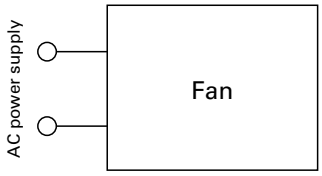

with Low-speed sensor

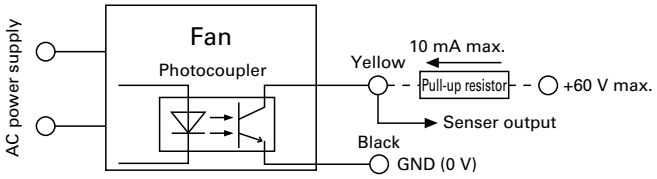

with PWM control and pulse sensor

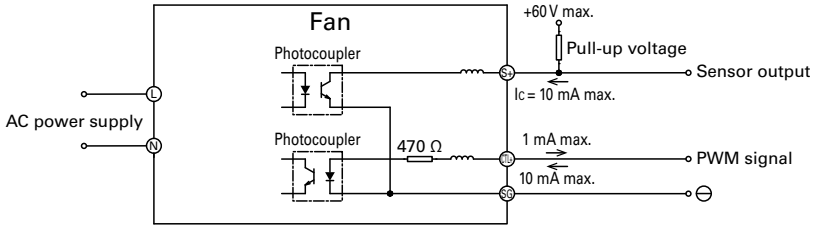

Dimensions (unit: mm) (Ribbed frame with pulse sensor with PWM control)

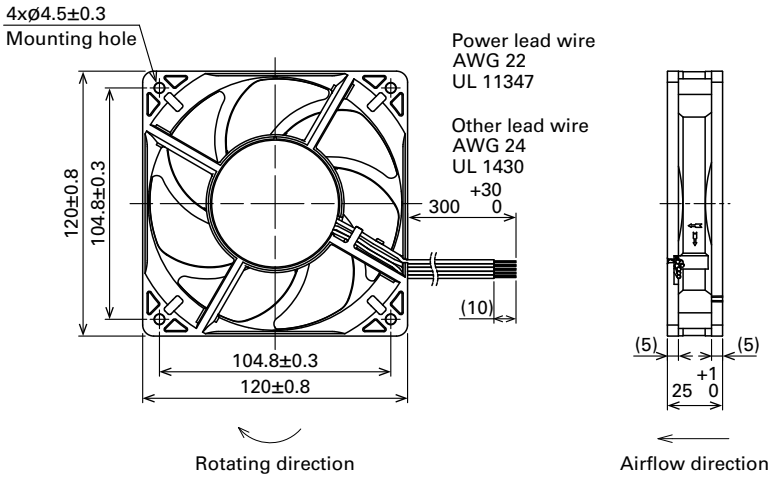

Reference Dimensions of Mounting Holes and Vent Opening (unit: mm)

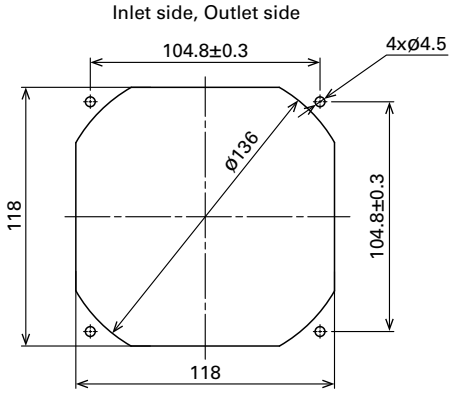

Options

Finger guards	page: p. 591

Model no.: 109-019E, 109-019K

Resin filter kits	page: p. 598

Model no.: 109-1000F13 (13PPI), 109-1000F20 (20PPI),
109-1000F30 (30PPI), 109-1000F40 (40PPI)

Resin finger guards	page: p. 597

Model no.: 109-1000G

120×120×38 mm

San Ace 120AD 9ADA type

General Specifications

- Material ..... Frame: Plastic (Flammability: UL 94V-0), Impeller: Plastic (Flammability: UL 94V-0)
- Expected life ..... See the table below. (L10 life: 90% survival rate for continuous operation in free air at 60˚C, rated voltage) Expected life at 40°C is for reference only.
- Motor protection function ..... Locked rotor burnout protection For details, please refer to p. 608.
- Dielectric strength ..... 50/60 Hz, 2500 VAC, for 1 second (between lead wire conductors and frame) 50/60 Hz, 1500 VAC, for 1 minute (between input lead wire (L, N) conductors and other lead wire conductors)
- Insulation resistance ..... 10 MΩ min. at 500 VDC (between lead wire conductors and frame)
- Sound pressure level (SPL) ..... A-weighted sound pressure level (SPL) at 1 m away from the air inlet.
- Storage temperature ..... -30 to +70˚C (Non-condensing)
- Lead wire ..... AC power input L: Orange N: Gray Sensor Yellow Control Brown GND Black
- Mass ..... 340 g

Take safety measures not to touch this product (including lead wires) while the power is on.
Please ensure appropriate insulation within the final product because of functional insulation between input leads wire (L, N) and other lead wire conductors.

Specifications

The models listed below **have ribs and no sensor.** For models without ribs, append "1" to the end of model numbers.

Model no.	Rated voltage [V]	Operating voltage range [V]	Frequency [Hz]	Rated current [A]	Rated input [W]	Rated speed [min⁻¹]	Max. airflow [m³/min]	Max. airflow [CFM]	Max. static pressure [Pa]	Max. static pressure [inchH₂O]	SPL [dB (A)]	Operating temperature [˚C]	Expected life [h]
9ADA1201G1002	100 to 240	90 to 264	50/60	0.17	9.0	4400	3.9	138	170	0.683	52	-20 to +70	40000/60˚C (70000/40˚C)
9ADA1201H1002				0.13	6.6	3800	3.36	119	128	0.514	48		60000/60˚C (90000/40˚C)

The models listed below **have ribs and a low-speed sensor.** For models without ribs, append "1" to the end of model numbers.

Model no.	Rated voltage [V]	Operating voltage range [V]	Frequency [Hz]	Rated current [A]	Rated input [W]	Rated speed [min⁻¹]	Max. airflow [m³/min]	Max. airflow [CFM]	Max. static pressure [Pa]	Max. static pressure [inchH₂O]	SPL [dB (A)]	Operating temperature [˚C]	Expected life [h]
9ADA1201G1H001	100 to 240	90 to 264	50/60	0.17	9.0	4400	3.9	138	170	0.683	52	-20 to +70	40000/60˚C (70000/40˚C)

The models listed below **have ribs and a pulse sensor with PWM control.** For models without ribs, append "1" to the end of model numbers.

Model no.	Rated voltage [V]	Operating voltage range [V]	Frequency [Hz]	PWM duty cycle* [%]	Rated current [A]	Rated input [W]	Rated speed [min⁻¹]	Max. airflow [m³/min]	Max. airflow [CFM]	Max. static pressure [Pa]	Max. static pressure [inchH₂O]	SPL [dB (A)]	Operating temperature [˚C]	Expected life [h]
9ADA1201P1G001	100 to 240	90 to 264	50/60	100	0.17	9.0	4400	3.9	138	170	0.683	52	-20 to +70	40000/60˚C (70000/40˚C)
				20	0.04	1.4	1050	0.93	32.8	15	0.06	25		

PWM frequency is 25 kHz. Models without ratings for 0% PWM duty cycle have zero speed at 0%. When control terminal is open, speed is the same as at 0% duty cycle.

Airflow - Static Pressure Characteristics

9ADA1201G1002 No sensor

Operating voltage range

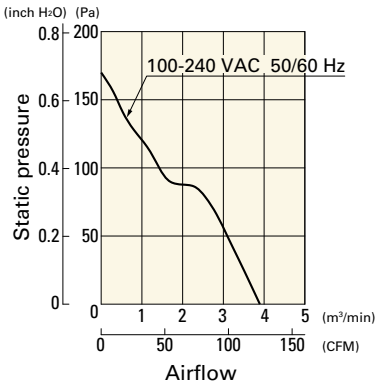

9ADA1201H1002 No sensor

Operating voltage range

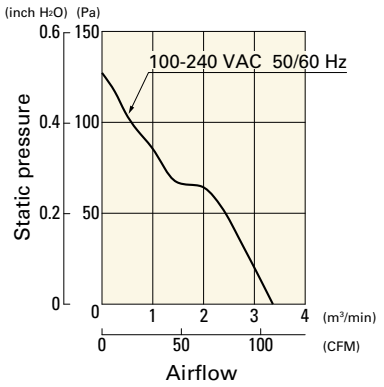

9ADA1201G1H001 With low-speed sensor

Operating voltage range

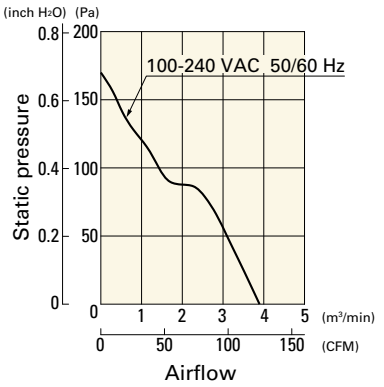

Airflow - Static Pressure Characteristics / PWM Duty - Speed Characteristics Example

9ADA1201P1G001 With pulse sensor with PWM control

PWM duty cycle

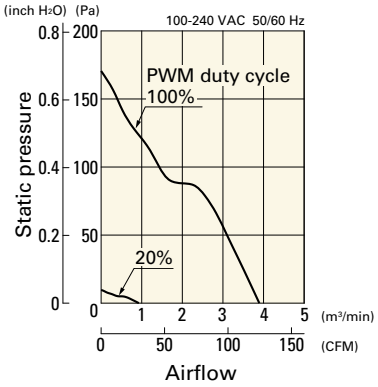

PWM duty - Speed characteristics example

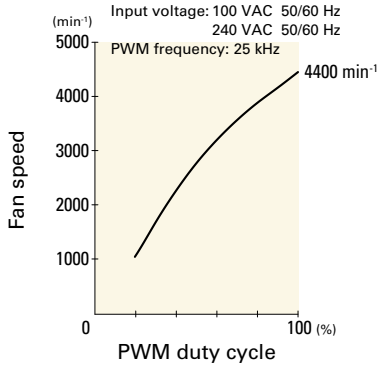

Connection Schematic

without Sensor

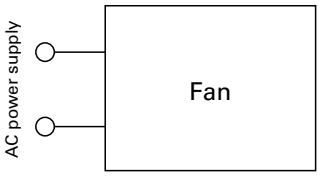

with Low-speed sensor

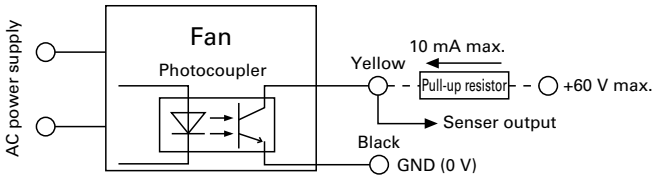

with PWM control and pulse sensor

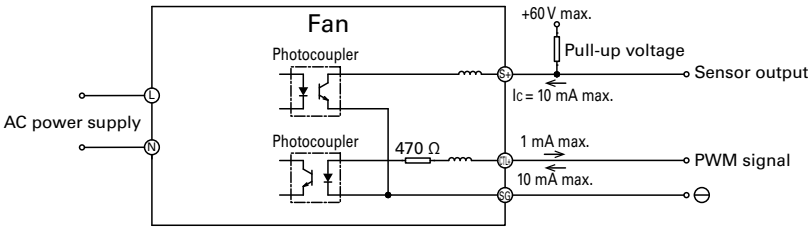

Dimensions (unit: mm) (Ribbed frame with pulse sensor with PWM control)

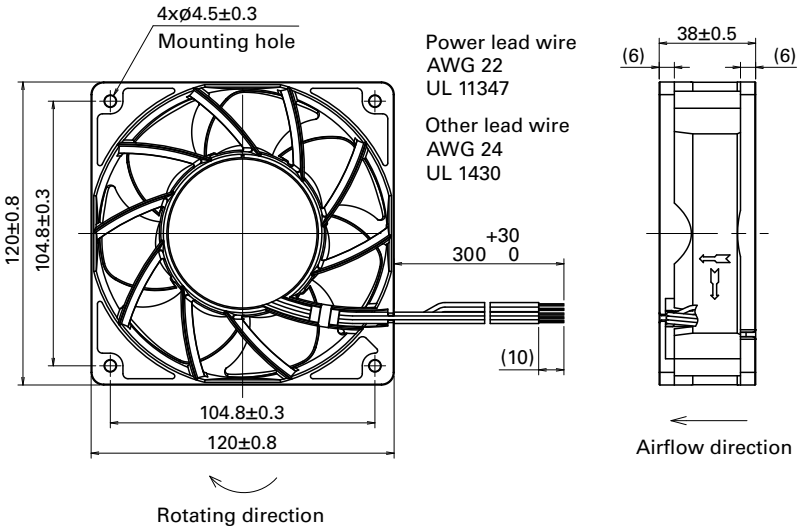

Reference Dimensions of Mounting Holes and Vent Opening (unit: mm)

Inlet side

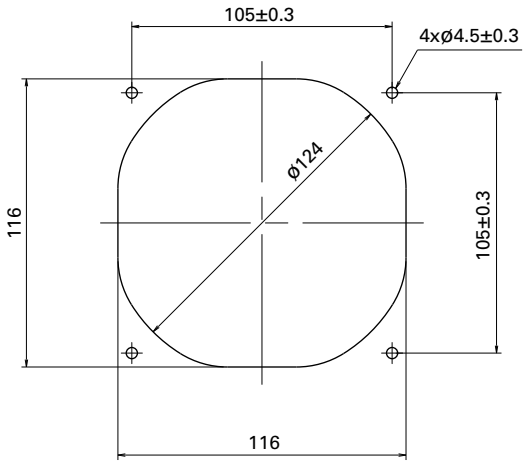

Outlet side

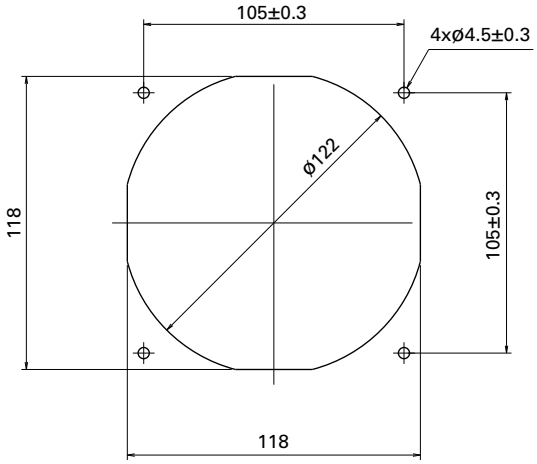

Options

Finger guards page: p. 591

Model no.: 109-019E, 109-019K

Resin finger guards page: p. 597

Model no.: 109-1000G

Resin filter kits page: p. 598

Model no.: 109-1000F13 (13PPI), 109-1000F20 (20PPI),
109-1000F30 (30PPI), 109-1000F40 (40PPI)

120×120×38 mm

San Ace 120AD 9ADAW type

IP68

General Specifications

- Material ..... Frame: Plastic (Flammability: UL 94V-0), Impeller: Plastic (Flammability: UL 94V-0)
- Expected life ..... See the table below. (L10 life: 90% survival rate for continuous operation in indoor free air at 60˚C, rated voltage) Expected life at 40°C is for reference only.
- Motor protection function ..... Locked rotor burnout protection For details, please refer to p. 608.
- Dielectric strength ..... 50/60 Hz, 2500 VAC, for 1 second (between lead wire conductors and frame) 50/60 Hz, 1500 VAC, for 1 minute (between input lead wire (L, N) conductors and other lead wire conductors)
- Insulation resistance ..... 10 MΩ min. at 500 VDC (between lead wire conductors and frame)
- Sound pressure level (SPL) ..... A-weighted sound pressure level (SPL) at 1 m away from the air inlet.
- Storage temperature ..... -30 to +70˚C (Non-condensing)
- Lead wire ..... AC power input L: Orange N: Gray Sensor Yellow Control Brown GND Black
- Mass ..... 420 g
- Ingress protection ..... IP68 For more information on IP rating, refer to p. 617.

Take safety measures not to touch this product (including lead wires) while the power is on.
Please ensure appropriate insulation within the final product because of functional insulation between input leads wire (L, N) and other lead wire conductors.

Specifications

The models listed below **have ribs and no sensor.** For models without ribs, append "1" to the end of model numbers.

Model no.	Rated voltage [V]	Operating voltage range [V]	Frequency [Hz]	Rated current [A]	Rated input [W]	Rated speed [min⁻¹]	Max. airflow [m³/min]	Max. airflow [CFM]	Max. static pressure [Pa]	Max. static pressure [inchH₂O]	SPL [dB (A)]	Operating temperature [˚C]	Expected life [h]
9ADAW1201H1002	100 to 240	90 to 264	50/60	0.13	6.6	3800	3.36	119	128	0.514	48	-20 to +70	60000/60˚C (90000/40˚C)

The models listed below **have ribs and a low-speed sensor.** For models without ribs, append "1" to the end of model numbers.

Model no.	Rated voltage [V]	Operating voltage range [V]	Frequency [Hz]	Rated current [A]	Rated input [W]	Rated speed [min⁻¹]	Max. airflow [m³/min]	Max. airflow [CFM]	Max. static pressure [Pa]	Max. static pressure [inchH₂O]	SPL [dB (A)]	Operating temperature [˚C]	Expected life [h]
9ADAW1201H1H001	100 to 240	90 to 264	50/60	0.13	6.6	3800	3.36	119	128	0.514	48	-20 to +70	60000/60˚C (90000/40˚C)

The models listed below **have ribs and a pulse sensor with PWM control.** For models without ribs, append "1" to the end of model numbers.

Model no.	Rated voltage [V]	Operating voltage range [V]	Frequency [Hz]	PWM duty cycle* [%]	Rated current [A]	Rated input [W]	Rated speed [min⁻¹]	Max. airflow [m³/min]	Max. airflow [CFM]	Max. static pressure [Pa]	Max. static pressure [inchH₂O]	SPL [dB (A)]	Operating temperature [˚C]	Expected life [h]
9ADAW1201P1H001	100 to 240	90 to 264	50/60	100	0.13	6.6	3800	3.36	119	128	0.514	48	-20 to +70	60000/60˚C (90000/40˚C)
				25	0.04	1.4	1050	0.93	32.8	15	0.06	25		

PWM frequency is 25 kHz. Models without ratings for 0% PWM duty cycle have zero speed at 0%. When control terminal is open, speed is the same as at 0% duty cycle.

Airflow - Static Pressure Characteristics

9ADAW1201H1002 No sensor

Operating voltage range

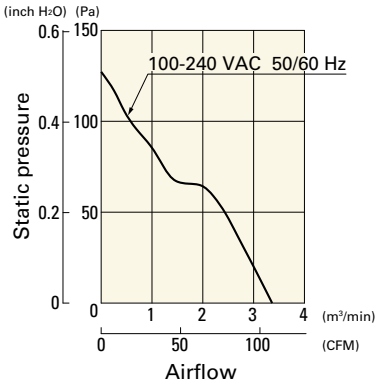

9ADAW1201H1H001 With low-speed sensor

Operating voltage range

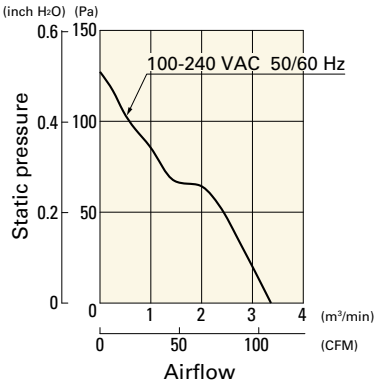

Airflow - Static Pressure Characteristics / PWM Duty - Speed Characteristics Example

9ADAW1201P1H001 With pulse sensor with PWM control

PWM duty cycle

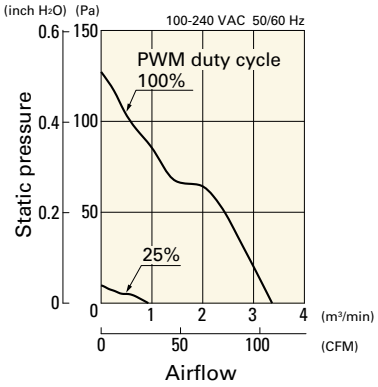

PWM duty - Speed characteristics example

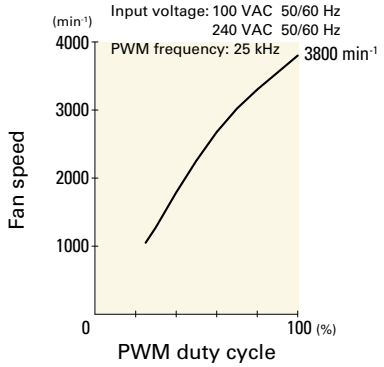

Connection Schematic

without Sensor

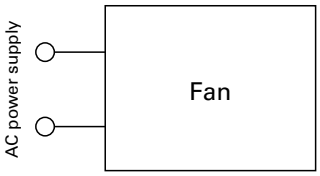

with Low-speed sensor

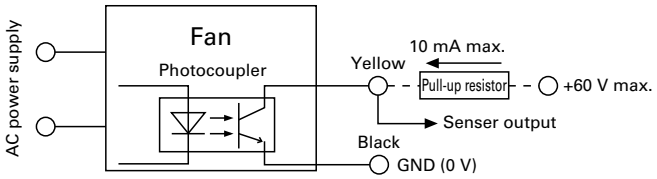

with PWM control and pulse sensor

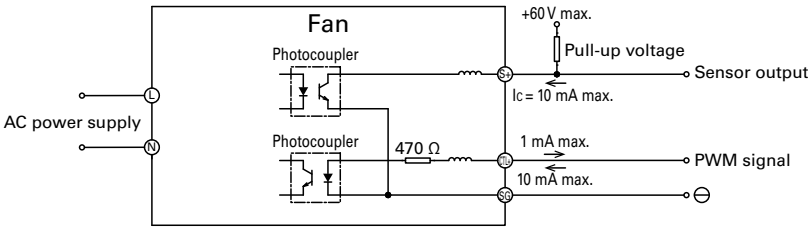

Dimensions (unit: mm) (Ribbed frame with pulse sensor with PWM control)

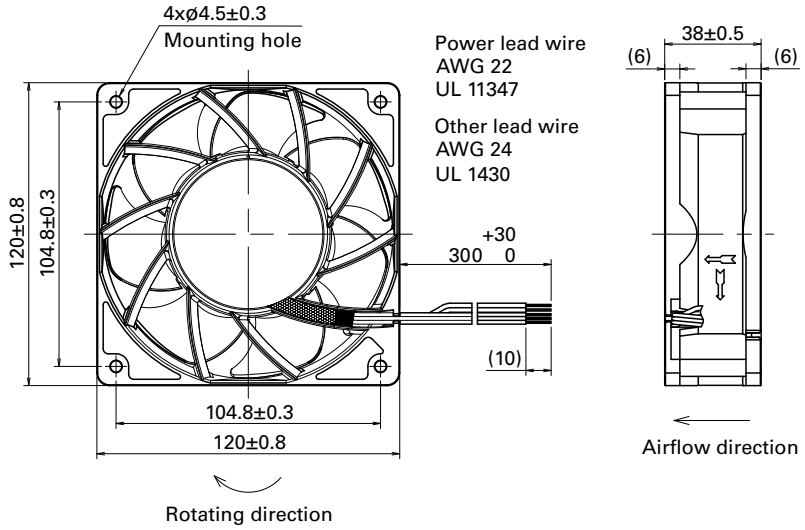

Reference Dimensions of Mounting Holes and Vent Opening (unit: mm)

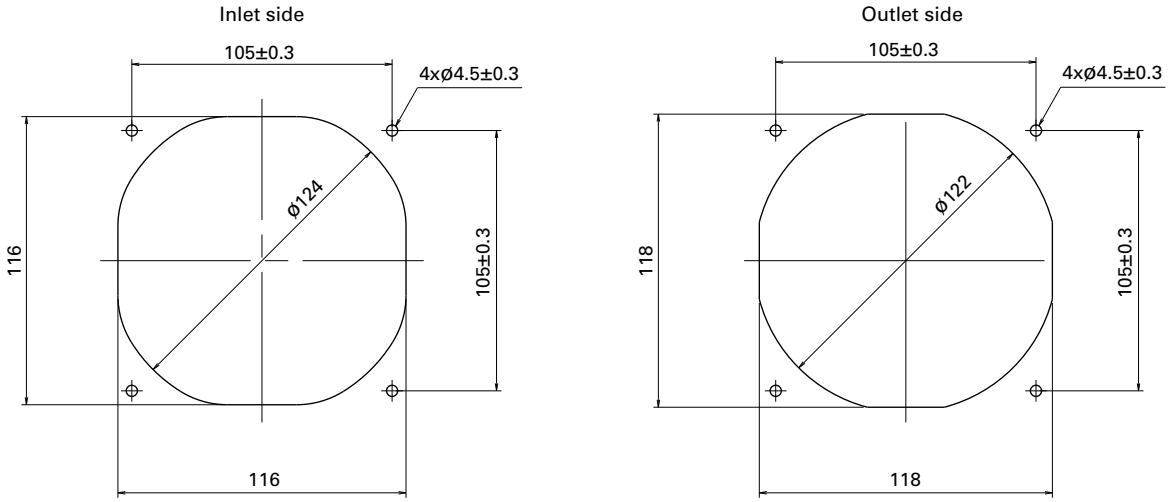

Options

Finger guards page: p. 591

Model no.: 109-019E, 109-019K

Resin filter kits page: p. 598

Model no.: 109-1000F13 (13PPI), 109-1000F20 (20PPI),
109-1000F30 (30PPI), 109-1000F40 (40PPI)

Resin finger guards page: p. 597

Model no.: 109-1000G

120×120×38 mm

San Ace 120AD 9AD type

General Specifications

- Material ..... Frame: Plastic (Flammability: UL 94V-0), Impeller: Plastic (Flammability: UL 94V-1)
- Expected life ..... See the table below. (L10 life: 90% survival rate for continuous operation in free air at 60˚C, rated voltage) Expected life at 40°C is for reference only.
- Motor structure ..... Brushless DC motor
- Motor protection function ..... Locked rotor burnout protection For details, please refer to p. 608.
- Dielectric strength ..... 50/60 Hz, 4000 VAC, for 1 minute (between input terminal and frame) 50/60 Hz, 2500 VAC, for 1 second (between input terminal and sensor output)
- Insulation resistance ..... 10 MΩ min. at 500 VDC (between lead wire conductors and frame)
- Sound pressure level (SPL) ..... A-weighted sound pressure level (SPL) at 1 m away from the air inlet.
- Storage temperature ..... -30 to +75˚C (Non-condensing)
- Mass ..... 290 g

Do not solder wires directly to AC input terminals.

Specifications

The models listed below **have ribs and no sensor.** For models without ribs, append "1" to the end of model numbers.

Model no.	Rated voltage [V]	Operating voltage range [V]	Frequency [Hz]	Rated current [A]	Rated input [W]	Rated speed [min⁻¹]	Max. airflow [m³/min]	Max. airflow [CFM]	Max. static pressure [Pa]	Max. static pressure [inchH₂O]	SPL [dB (A)]	Operating temperature [˚C]	Expected life [h]
9AD1201H12	100 to 240	90 to 264	50/60	0.08	4.4	3250	3.0	106	84	0.34	42	-20 to +75	60000/60˚C (90000/40˚C)

The models listed below **have ribs and a low-speed sensor.** For models without ribs, append "1" to the end of model numbers.

Model no.	Rated voltage [V]	Operating voltage range [V]	Frequency [Hz]	Rated current [A]	Rated input [W]	Rated speed [min⁻¹]	Max. airflow [m³/min]	Max. airflow [CFM]	Max. static pressure [Pa]	Max. static pressure [inchH₂O]	SPL [dB (A)]	Operating temperature [˚C]	Expected life [h]
9AD1201H1H	100 to 240	90 to 264	50/60	0.08	4.4	3250	3.0	106	84	0.34	42	-20 to +75	60000/60˚C (90000/40˚C)

Note: The mark indicates Short Lead Time Service applicable models. See p. 664 for details.

Set Models

Fan, finger guard, plug cord, screws, etc. can be purchased in one package. For details, please refer to p. 665.

Order no.	Set items					
	Fan (1 pc)	Voltage	Low-speed sensor	Plug cord (1 pc)	Finger guard (1 pc)	Screws with hex nuts (4 pairs)
ST1-9AD1201H12	9AD1201H12	100 to 240 V		489-1635-L10	109-019E	M4×55 mm
ST1-9AD1201H1H	9AD1201H1H		◯	489-1635-L10	109-019E	

Airflow - Static Pressure Characteristics

9AD1201H12, 9AD1201H1H

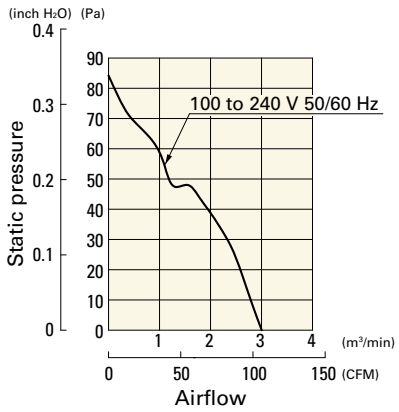

Connection Schematic

without Sensor

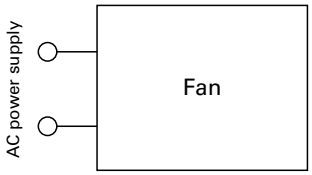

with Low-speed sensor

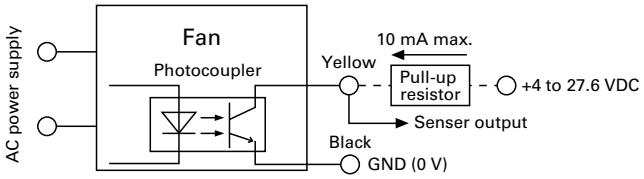

Dimensions (unit: mm) (With ribs)

without Sensor

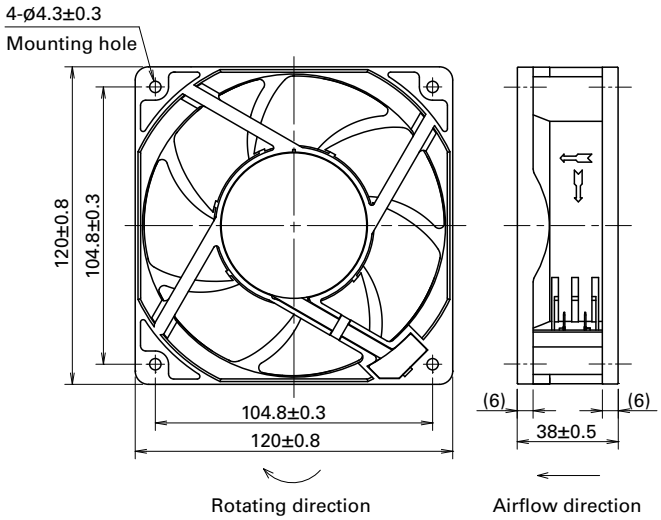

with Low-speed sensor

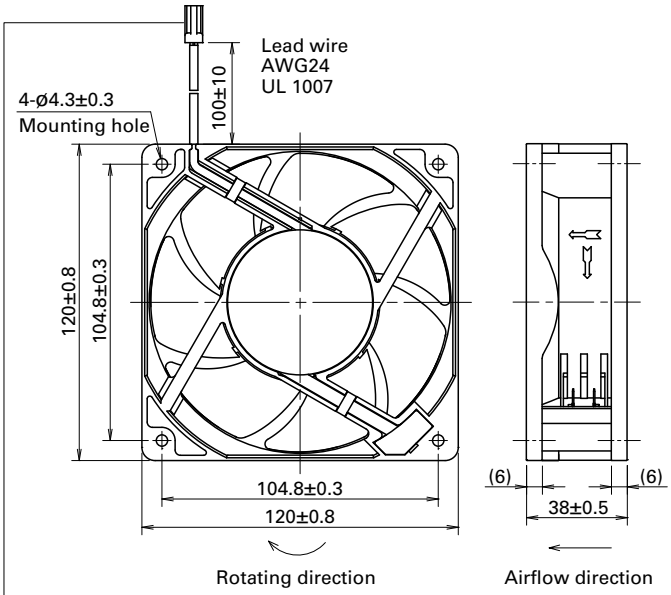

Connector: TE Connectivity 171822-2
(Pin1 Sensor output: Yellow Pin2 -: Black)
Contact: TE Connectivity 170262-1

Note: Recommended connectors and contacts are listed below.
Connector: TE Connectivity 172211-2
Contact: TE Connectivity 170376-1

Reference Dimensions of Mounting Holes and Vent Opening (unit: mm)

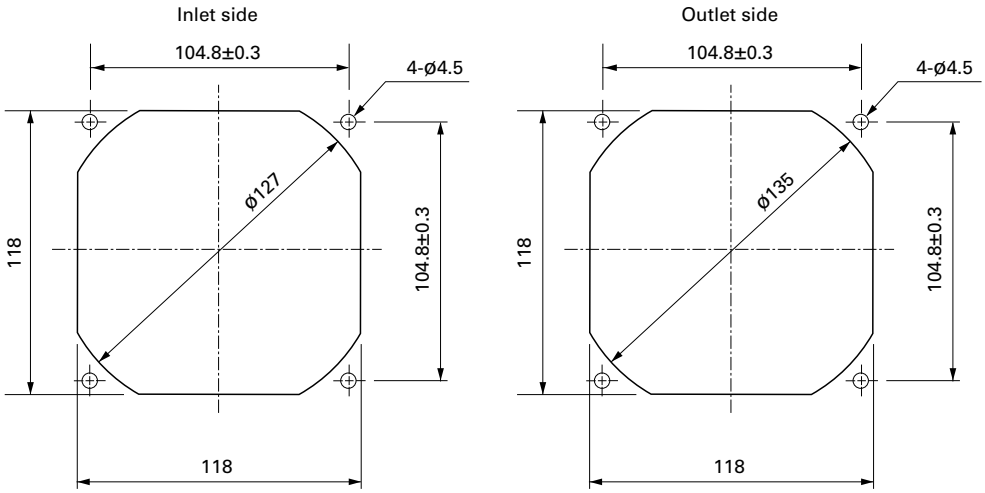

Options

Finger guards
page: p. 591

Model no.: 109-019E, 109-019K

Resin filter kits
page: p. 598

Model no.: 109-1000F13 (13PPI), 109-1000F20 (20PPI),
109-1000F30 (30PPI), 109-1000F40 (40PPI)

Sensor extension wiring harness
page: p. 603

Model no.: 489-1636

Resin finger guards
page: p. 597

Model no.: 109-1000G

Plug cord
page: p. 603

Model no.: 489-1635-L10, 489-1635-L21

ACDC Fan

160×160×51 mm

San Ace 160AD 9AD type

General Specifications

- Material ..... Frame: Aluminum (Black coating), Impeller: Plastic (Flammability: UL 94V-0)
- Expected life ..... See the table below. (L10 life: 90% survival rate for continuous operation in free air at 60˚C, rated voltage) Expected life at 40°C is for reference only.
- Motor protection function ..... Locked rotor burnout protection For details, please refer to p. 608.
- Dielectric strength ..... 50/60 Hz, 1500 VAC, for 1 minute (Lead wire model: between lead wire conductors and frame, terminal model: between terminals and frame)
- Insulation resistance ..... 10 MΩ min. at 500 VDC (Lead wire model: between lead wire conductors and frame, terminal model: between terminals and frame)
- Sound pressure level (SPL) ..... A-weighted sound pressure level (SPL) at 1 m away from the air inlet.
- Storage temperature ..... -30 to +70˚C (Non-condensing)
- Lead wire ..... AC power input L: Orange N: Gray Sensor Yellow Control Brown GND Black
- Mass ..... 880 g

To display CE mark/UKCA mark on system, refer to p. 613.

Specifications

The models listed below **have ribs and no sensor.**

Model no.	Rated voltage [V]	Operating voltage range [V]	Frequency [Hz]	Rated current [A]	Rated input [W]	Rated speed [min⁻¹]	Max. airflow [m³/min]	Max. airflow [CFM]	Max. static pressure [Pa]	Max. static pressure [inchH₂O]	SPL [dB (A)]	Operating temperature [˚C]	Expected life [h]
9AD1601H5002(1)	100 to 240	90 to 264	50/60	0.46	22	4150	8.2	290	167	0.66	58	-20 to +70	40000/60˚C (70000/40˚C)
9AD1601H5T02(2)				0.46	22	4150	8.2	290	167	0.66	58		

(1) Lead wire model (2) Terminal model

The models listed below **have ribs and a low-speed sensor.**

Model no.	Rated voltage [V]	Operating voltage range [V]	Frequency [Hz]	Rated current [A]	Rated input [W]	Rated speed [min⁻¹]	Max. airflow [m³/min]	Max. airflow [CFM]	Max. static pressure [Pa]	Max. static pressure [inchH₂O]	SPL [dB (A)]	Operating temperature [˚C]	Expected life [h]
9AD1601H5H001(1)	100 to 240	90 to 264	50/60	0.46	22	4150	8.2	290	167	0.66	58	-20 to +70	40000/60˚C (70000/40˚C)
9AD1601H5HT01(2)				0.46	22	4150	8.2	290	167	0.66	58		

(1) Lead wire model (2) Terminal model

The models listed below **have ribs and a pulse sensor with PWM control.**

Model no.	Rated voltage [V]	Operating voltage range [V]	Frequency [Hz]	PWM duty cycle(3) [%]	Rated current [A]	Rated input [W]	Rated speed [min⁻¹]	Max. airflow [m³/min]	Max. airflow [CFM]	Max. static pressure [Pa]	Max. static pressure [inchH₂O]	SPL [dB (A)]	Operating temperature [˚C]	Expected life [h]
9AD1601P5H003(1)	100 to 240	90 to 264	50/60	100	0.46	22	4150	8.2	290	167	0.66	58	-20 to +70	40000/60˚C (70000/40˚C)
				0	0.10	4.0	1500	3.07	108	44	0.17	31		
9AD1601P5HT03(2)				100	0.46	22	4150	8.2	290	167	0.66	58		
				0	0.10	4.0	1500	3.07	108	44	0.17	31		

(1) Lead wire model (2) Terminal model
(3) PWM frequency is 25 kHz. Models without ratings for 0% PWM duty cycle have zero speed at 0%. When control terminal is open, speed is the same as at 0% duty cycle.

Note: The mark indicates Short Lead Time Service applicable models. See p. 664 for details.

Airflow - Static Pressure Characteristics

9AD1601H5002, 9AD1601H5T02
No sensor

Operating voltage range

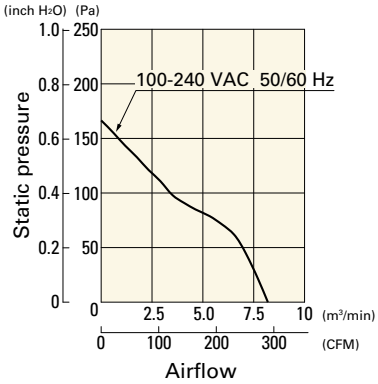

9AD1601H5H001, 9AD1601H5HT01
With low-speed sensor

Operating voltage range

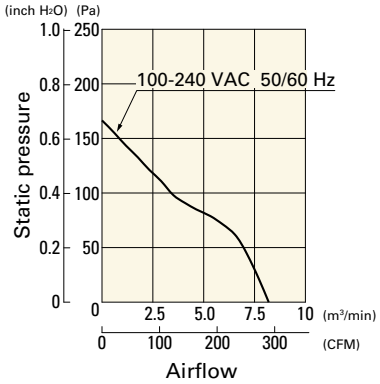

Airflow - Static Pressure Characteristics / PWM Duty - Speed Characteristics Example

9AD1601P5H003, 9AD1601P5HT03 With pulse sensor with PWM control

PWM duty cycle

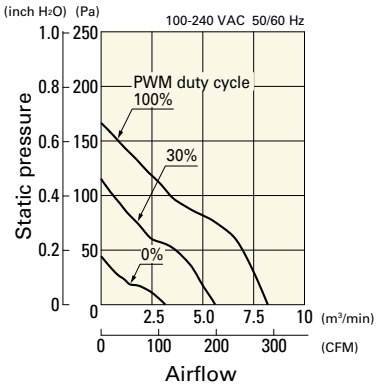

PWM duty - Speed characteristics example

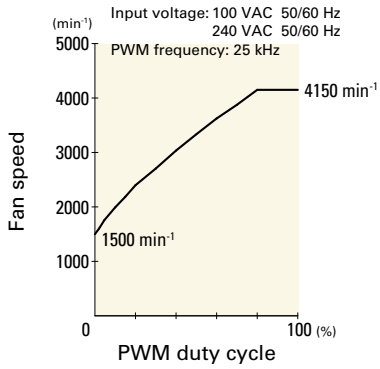

Connection Schematic

without Sensor

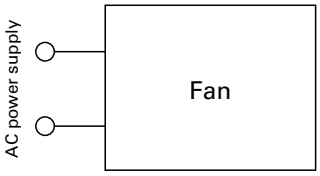

with Low-speed sensor

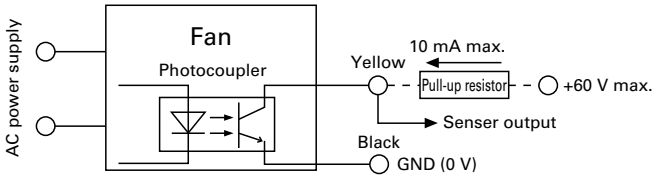

with PWM control and pulse sensor

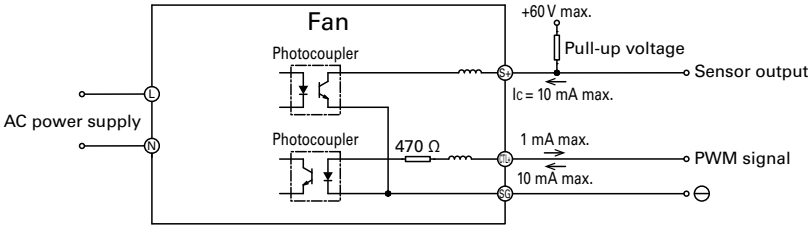

Dimensions (unit: mm) (With pulse sensor with PWM control)

Lead wire model

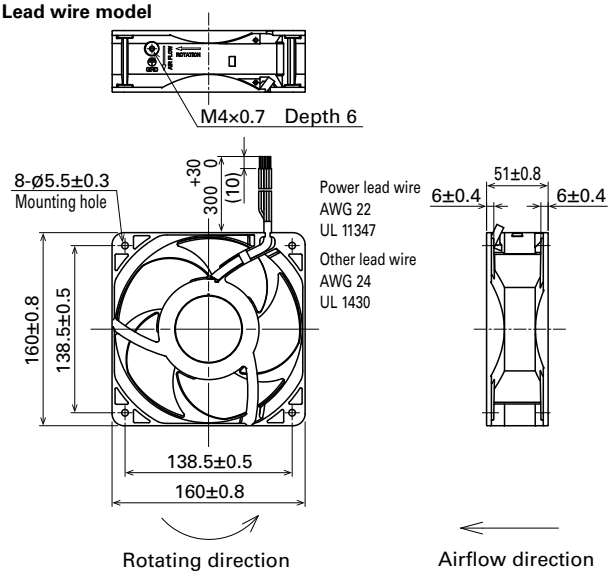

Terminal model

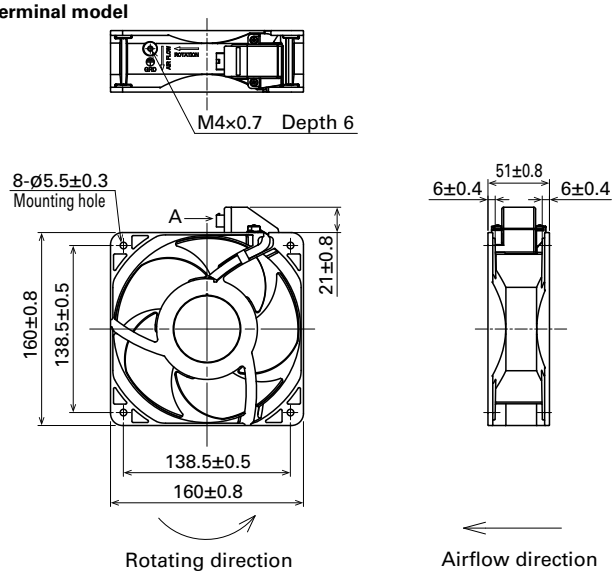

A Connector contact

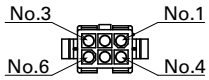

Pin assignment
Connector (Model no.:TE Connectivity: 1-172160-9)

Pin No.	Function	Type
1	L	AC
2	No connection	-
3	N	AC
4	PWM	DC
5	GND	DC
6	Sensor	DC

Reference Dimensions of Mounting Holes and Vent Opening (unit: mm)

Inlet side, Outlet side

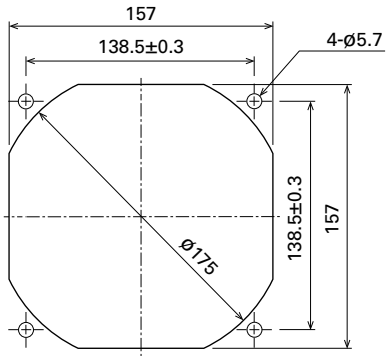

Options

Finger guards page: p. 591

Model no.: 109-619E, 109-619H

Terminal model wiring harness page: p. 603

Compatible with a fan without sensor.
Model no.: 489-1648, 489-1651

Compatible with a fan with low-speed sensor, and a fan with pulse sensor and PWM control.
Model no.: 489-1647, 489-1650

Errata sheet

160×160×51 mm

IP56

San Ace 160AD 9ADW type

General Specifications

- Material ..... Frame: Aluminum (Black coating), Impeller: Plastic (Flammability: UL 94V-0)
- Expected life ..... See the table below. (L10 life: 90% survival rate for continuous operation in indoor free air at 60˚C, rated voltage) Expected life at 40°C is for reference only.
- Motor protection function ..... Locked rotor burnout protection For details, please refer to p. 608.
- Dielectric strength ..... 50/60 Hz, 1500 VAC, for 1 minute (Lead wire model: between lead wire conductors and frame, terminal model: between terminals and frame)
- Insulation resistance ..... 10 MΩ min. at 500 VDC (Lead wire model: between lead wire conductors and frame, terminal model: between terminals and frame)
- Sound pressure level (SPL) ..... A-weighted sound pressure level (SPL) at 1 m away from the air inlet.
- Storage temperature ..... -30 to +70˚C (Non-condensing)
- Lead wire ..... AC power input L: Orange N: Gray Sensor Yellow Control Brown GND Black
- Mass ..... 940 g
- Ingress protection ..... IP56 (Excluding the connectors of terminal models) For more information on IP rating, refer to p. 617.

To display CE mark/UKCA mark on system, refer to p. 613.

Specifications

The models listed below **have ribs and no sensor.**

Model no.	Rated voltage [V]	Operating voltage range [V]	Frequency [Hz]	Rated current [A]	Rated input [W]	Rated speed [min⁻¹]	Max. airflow [m³/min]	Max. airflow [CFM]	Max. static pressure [Pa]	Max. static pressure [inchH₂O]	SPL [dB (A)]	Operating temperature [˚C]	Expected life [h]
9ADW1601H5002(1)	100 to 240	90 to 264	50/60	0.46	22	4150	8.2	290	167	0.66	58	-20 to +70	40000/60˚C (70000/40˚C)
9ADW1601H5T02(2)				0.46	22	4150	8.2	290	167	0.66	58		

(1) Lead wire model (2) Terminal model

The models listed below **have ribs and a low-speed sensor.**

Model no.	Rated voltage [V]	Operating voltage range [V]	Frequency [Hz]	Rated current [A]	Rated input [W]	Rated speed [min⁻¹]	Max. airflow [m³/min]	Max. airflow [CFM]	Max. static pressure [Pa]	Max. static pressure [inchH₂O]	SPL [dB (A)]	Operating temperature [˚C]	Expected life [h]
9ADW1601H5H001(1)	100 to 240	90 to 264	50/60	0.46	22	4150	8.2	290	167	0.66	58	-20 to +70	40000/60˚C (70000/40˚C)
9ADW1601H5HT01(2)				0.46	22	4150	8.2	290	167	0.66	58		

(1) Lead wire model (2) Terminal model

The models listed below **have ribs and a pulse sensor with PWM control.**

Model no.	Rated voltage [V]	Operating voltage range [V]	Frequency [Hz]	PWM duty cycle(3) [%]	Rated current [A]	Rated input [W]	Rated speed [min⁻¹]	Max. airflow [m³/min]	Max. airflow [CFM]	Max. static pressure [Pa]	Max. static pressure [inchH₂O]	SPL [dB (A)]	Operating temperature [˚C]	Expected life [h]
9ADW1601P5H003(1)	100 to 240	90 to 264	50/60	100	0.46	22	4150	8.2	290	167	0.66	58	-20 to +70	40000/60˚C (70000/40˚C)
				0	0.10	4.0	1500	3.07	108	44	0.17	31		
9ADW1601P5HT03(2)				100	0.46	22	4150	8.2	290	167	0.66	58		
				0	0.10	4.0	1500	3.07	108	44	0.17	31		

(1) Lead wire model (2) Terminal model
(3) PWM frequency is 25 kHz. Models without ratings for 0% PWM duty cycle have zero speed at 0%. When control terminal is open, speed is the same as at 0% duty cycle.

Note: The » mark indicates Short Lead Time Service applicable models. See p. 664 for details.

Airflow - Static Pressure Characteristics

9ADW1601H5002, 9ADW1601H5T02
No sensor

Operating voltage range

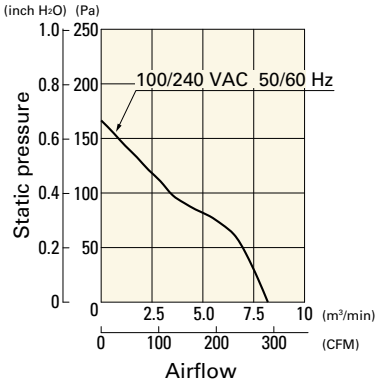

9ADW1601H5H001, 9ADW1601H5HT01
With low-speed sensor

Operating voltage range

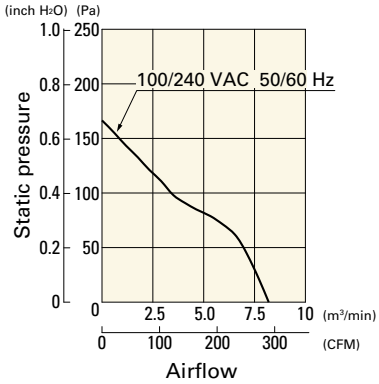

Airflow - Static Pressure Characteristics / PWM Duty - Speed Characteristics Example

9ADW1601P5H003, 9ADW1601P5HT03 With pulse sensor with PWM control

PWM duty cycle

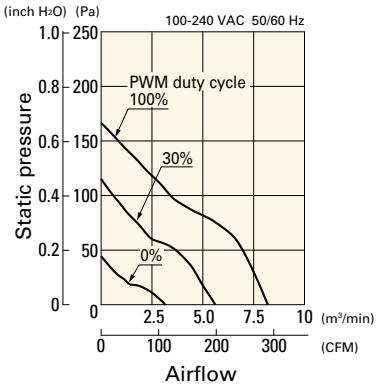

PWM duty - Speed characteristics example

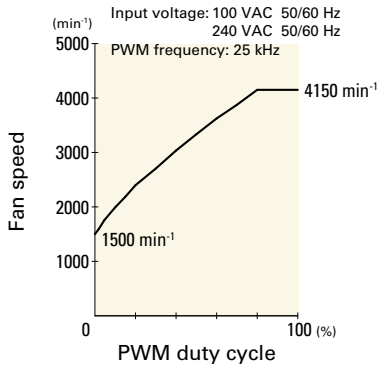

Connection Schematic

without Sensor

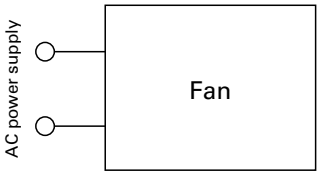

with Low-speed sensor

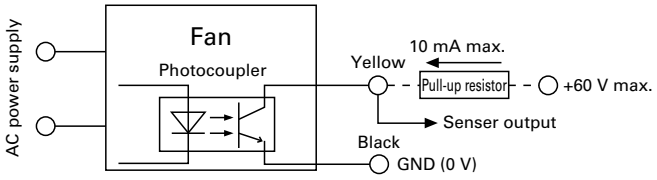

with PWM control and pulse sensor

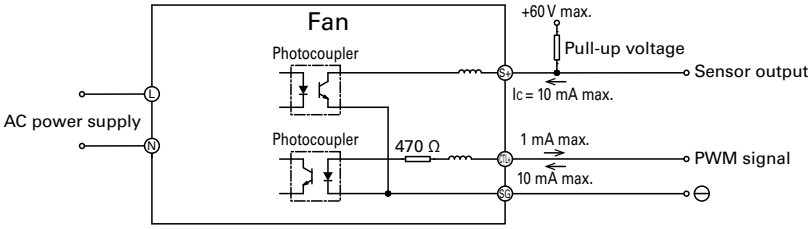

ACDC Fan 160 mm sq. ACDC

Dimensions (unit: mm) (With pulse sensor with PWM control)

Lead wire model

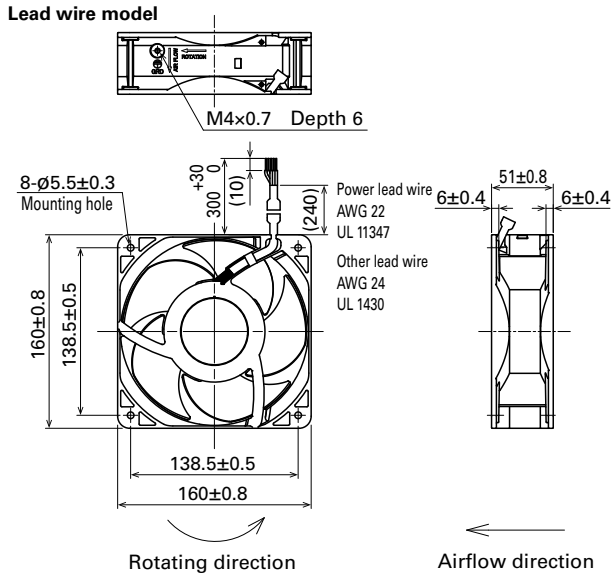

Terminal model

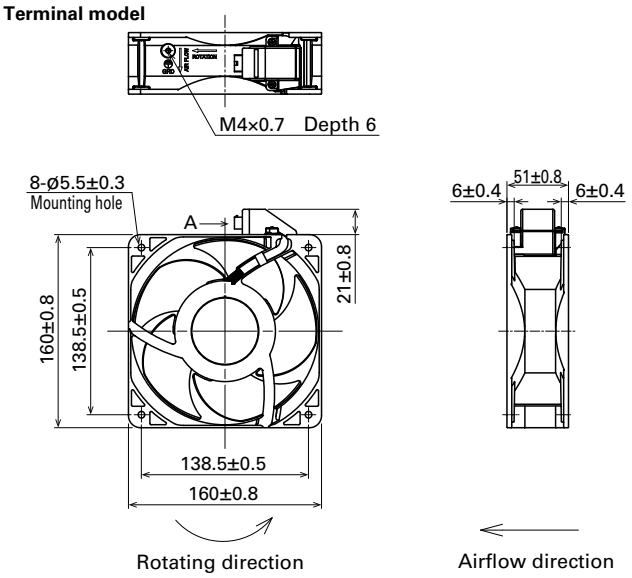

A Connector contact

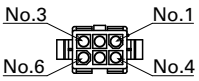

Pin assignment
Connector (Model no.: TE Connectivity: 1-172160-9)

Pin No.	Function	Type
1	L	AC
2	No connection	-
3	N	AC
4	PWM	DC
5	GND	DC
6	Sensor	DC

Reference Dimensions of Mounting Holes and Vent Opening (unit: mm)

Inlet side, Outlet side

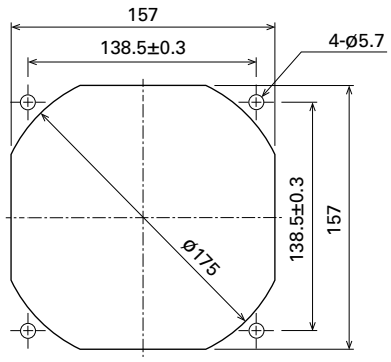

Options

Finger guards page: p. 591

Model no.: 109-619E, 109-619H

Terminal model wiring harness page: p. 603

Compatible with a fan without sensor.
Model no.: 489-1648, 489-1651

Compatible with a fan with low-speed sensor, and a fan with pulse sensor and PWM control.
Model no.: 489-1647, 489-1650

ACDC Fan

ø172×150×51 mm

San Ace 172AD 9AD type

Sidecut type

General Specifications

- Material ..... Frame: Aluminum (Black coating), Impeller: Plastic (Flammability: UL 94V-0)
- Expected life ..... See the table below. (L10 life: 90% survival rate for continuous operation in free air at 60˚C, rated voltage) Expected life at 40°C is for reference only.
- Motor protection function ..... Locked rotor burnout protection For details, please refer to p. 608.
- Dielectric strength ..... 50/60 Hz, 1500 VAC, for 1 minute (Lead wire model: between lead wire conductors and frame, terminal model: between terminals and frame)
- Insulation resistance ..... 10 MΩ min. at 500 VDC (Lead wire model: between lead wire conductors and frame, terminal model: between terminals and frame)
- Sound pressure level (SPL) ..... A-weighted sound pressure level (SPL) at 1 m away from the air inlet.
- Storage temperature ..... -30 to +70˚C (Non-condensing)
- Lead wire ..... AC power input L: Orange N: Gray Sensor Yellow Control Brown GND Black
- Mass ..... 750 g

To display CE mark/UKCA mark on system, refer to p. 613.

Specifications

The models listed below **have ribs and no sensor.**

Model no.	Rated voltage [V]	Operating voltage range [V]	Frequency [Hz]	Rated current [A]	Rated input [W]	Rated speed [min⁻¹]	Max. airflow [m³/min]	Max. airflow [CFM]	Max. static pressure [Pa]	Max. static pressure [inchH₂O]	SPL [dB (A)]	Operating temperature [˚C]	Expected life [h]
9AD5701H5002(1)	100 to 240	90 to 264	50/60	0.3	17	3800	6.7	236	195	0.78	54	-20 to +70	40000/60˚C (70000/40˚C)
9AD5701H5T02(2)				0.3	17	3800	6.7	236	195	0.78	54		

(1) Lead wire model (2) Terminal model

The models listed below **have ribs and a low-speed sensor.**

Model no.	Rated voltage [V]	Operating voltage range [V]	Frequency [Hz]	Rated current [A]	Rated input [W]	Rated speed [min⁻¹]	Max. airflow [m³/min]	Max. airflow [CFM]	Max. static pressure [Pa]	Max. static pressure [inchH₂O]	SPL [dB (A)]	Operating temperature [˚C]	Expected life [h]
9AD5701H5H001(1)	100 to 240	90 to 264	50/60	0.3	17	3800	6.7	236	195	0.78	54	-20 to +70	40000/60˚C (70000/40˚C)
9AD5701H5HT01(2)				0.3	17	3800	6.7	236	195	0.78	54		

(1) Lead wire model (2) Terminal model

The models listed below **have ribs and a pulse sensor with PWM control.**

Model no.	Rated voltage [V]	Operating voltage range [V]	Frequency [Hz]	PWM duty cycle(3) [%]	Rated current [A]	Rated input [W]	Rated speed [min⁻¹]	Max. airflow [m³/min]	Max. airflow [CFM]	Max. static pressure [Pa]	Max. static pressure [inchH₂O]	SPL [dB (A)]	Operating temperature [˚C]	Expected life [h]
9AD5701P5H003(1)	100 to 240	90 to 264	50/60	100	0.3	17	3800	6.7	236	195	0.78	54	-20 to +70	40000/60˚C (70000/40˚C)
				0	0.08	3.2	1500	2.64	93	40	0.16	31		
9AD5701P5HT03(2)				100	0.3	17	3800	6.7	236	195	0.78	54		
				0	0.08	3.2	1500	2.64	93	40	0.16	31		

(1) Lead wire model (2) Terminal model
(3) PWM frequency is 25 kHz. Models without ratings for 0% PWM duty cycle have zero speed at 0%. When control terminal is open, speed is the same as at 0% duty cycle.

Note: The mark indicates Short Lead Time Service applicable models. See p. 664 for details.

Airflow - Static Pressure Characteristics

9AD5701H5002, 9AD5701H5T02
No sensor

Operating voltage range

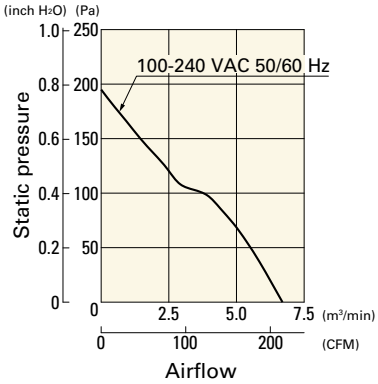

9AD5701H5H001, 9AD5701H5HT01
With low-speed sensor

Operating voltage range

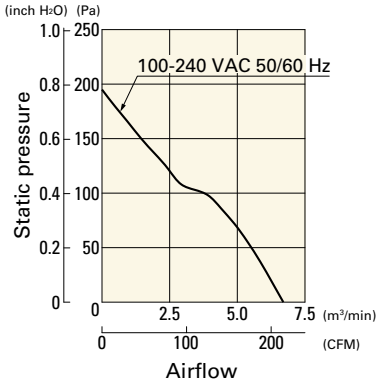

Airflow - Static Pressure Characteristics / PWM Duty - Speed Characteristics Example

9AD5701P5H003, 9AD5701P5HT03 With pulse sensor with PWM control

PWM duty cycle

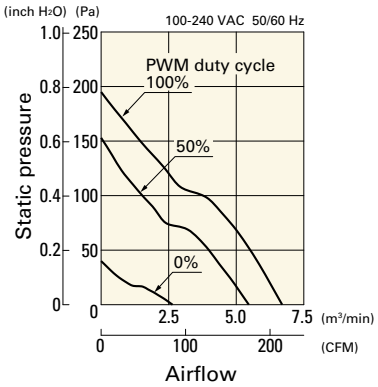

PWM duty - Speed characteristics example

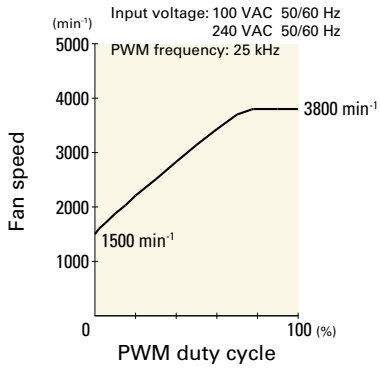

Connection Schematic

without Sensor

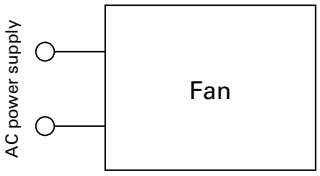

with Low-speed sensor

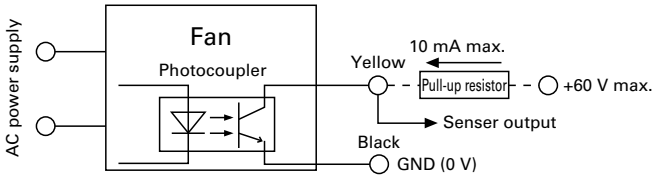

with PWM control and pulse sensor

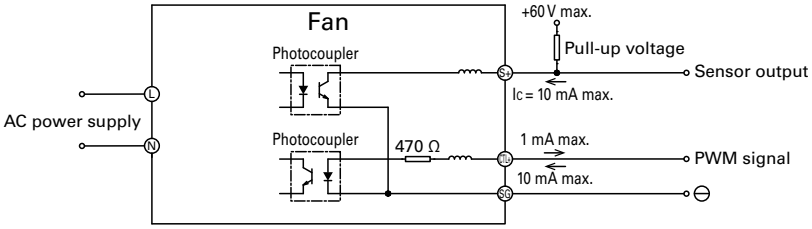

Dimensions (unit: mm) (With pulse sensor with PWM control)

Lead wire model

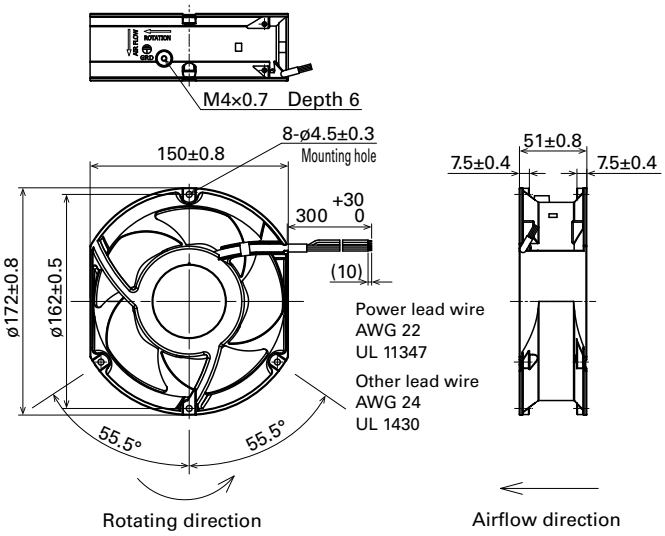

Terminal model

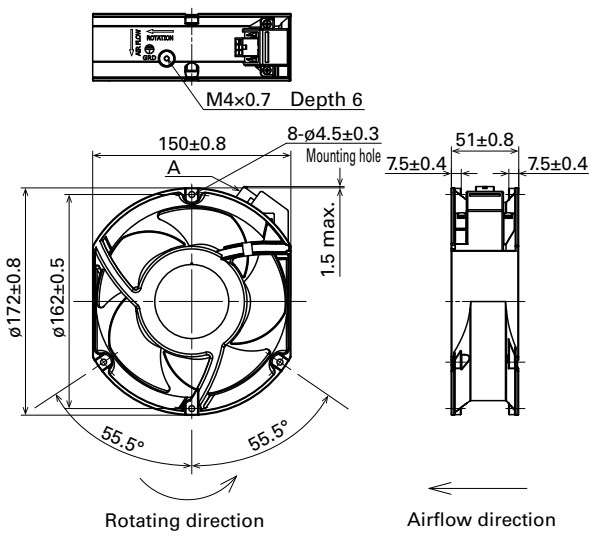

A Connector contact

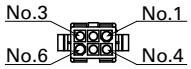

Pin assignment
Connector (Model no.: TE Connectivity: 1-172160-9)

Pin No.	Function	Type
1	L	AC
2	No connection	-
3	N	AC
4	PWM	DC
5	GND	DC
6	Sensor	DC

Reference Dimensions of Mounting Holes and Vent Opening (unit: mm)

Inlet side, Outlet side

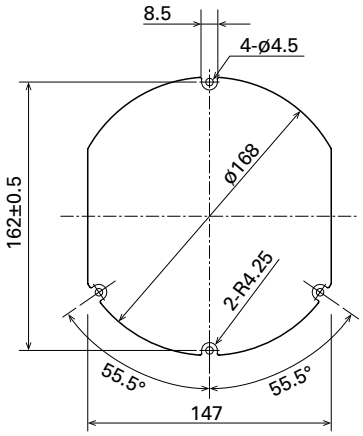

Options

Finger guards page: p. 592

Model no.: 109-1155

Terminal model wiring harness page: p. 603

Compatible with a fan without sensor.
Model no.: 489-1648, 489-1651

Compatible with a fan with low-speed sensor, and a fan with pulse sensor and PWM control.
Model no.: 489-1647, 489-1650

Errata sheet

ø172×150×51 mm

IP56

San Ace 172AD 9ADW type

Sidecut type

General Specifications

- Material ..... Frame: Aluminum (Black coating), Impeller: Plastic (Flammability: UL 94V-0)
- Expected life ..... See the table below. (L10 life: 90% survival rate for continuous operation in indoor free air at 60˚C, rated voltage) Expected life at 40°C is for reference only.
- Motor protection function ..... Locked rotor burnout protection For details, please refer to p. 608.
- Dielectric strength ..... 50/60 Hz, 1500 VAC, for 1 minute (Lead wire model: between lead wire conductors and frame, terminal model: between terminals and frame)
- Insulation resistance ..... 10 MΩ min. at 500 VDC (Lead wire model: between lead wire conductors and frame, terminal model: between terminals and frame)
- Sound pressure level (SPL) ..... A-weighted sound pressure level (SPL) at 1 m away from the air inlet.
- Storage temperature ..... -30 to +70˚C (Non-condensing)
- Lead wire ..... AC power input L: Orange N: Gray Sensor Yellow Control Brown GND Black
- Mass ..... 810 g
- Ingress protection ..... IP56 (Excluding the connectors of terminal models) For more information on IP rating, refer to p. 617.

To display CE mark/UKCA mark on system, refer to p. 613.

Specifications

The models listed below **have ribs and no sensor.**

Model no.	Rated voltage [V]	Operating voltage range [V]	Frequency [Hz]	Rated current [A]	Rated input [W]	Rated speed [min⁻¹]	Max. airflow [m³/min]	Max. airflow [CFM]	Max. static pressure [Pa]	Max. static pressure [inchH₂O]	SPL [dB (A)]	Operating temperature [˚C]	Expected life [h]
9ADW5701H5002(1)	100 to 240	90 to 264	50/60	0.3	17	3800	6.7	236	195	0.78	54	-20 to +70	40000/60˚C (70000/40˚C)
9ADW5701H5T02(2)				0.3	17	3800	6.7	236	195	0.78	54		

(1) Lead wire model (2) Terminal model

The models listed below **have ribs and a low-speed sensor.**

Model no.	Rated voltage [V]	Operating voltage range [V]	Frequency [Hz]	Rated current [A]	Rated input [W]	Rated speed [min⁻¹]	Max. airflow [m³/min]	Max. airflow [CFM]	Max. static pressure [Pa]	Max. static pressure [inchH₂O]	SPL [dB (A)]	Operating temperature [˚C]	Expected life [h]
9ADW5701H5H001(1)	100 to 240	90 to 264	50/60	0.3	17	3800	6.7	236	195	0.78	54	-20 to +70	40000/60˚C (70000/40˚C)
9ADW5701H5HT01(2)				0.3	17	3800	6.7	236	195	0.78	54		

(1) Lead wire model (2) Terminal model

The models listed below **have ribs and a pulse sensor with PWM control.**

Model no.	Rated voltage [V]	Operating voltage range [V]	Frequency [Hz]	PWM duty cycle(3) [%]	Rated current [A]	Rated input [W]	Rated speed [min⁻¹]	Max. airflow [m³/min]	Max. airflow [CFM]	Max. static pressure [Pa]	Max. static pressure [inchH₂O]	SPL [dB (A)]	Operating temperature [˚C]	Expected life [h]
9ADW5701P5H003(1)	100 to 240	90 to 264	50/60	100	0.3	17	3800	6.7	236	195	0.78	54	-20 to +70	40000/60˚C (70000/40˚C)
				0	0.08	3.2	1500	2.64	93	40	0.16	31		
9ADW5701P5HT03(2)				100	0.3	17	3800	6.7	236	195	0.78	54		
				0	0.08	3.2	1500	2.64	93	40	0.16	31		

(1) Lead wire model (2) Terminal model
(3) PWM frequency is 25 kHz. Models without ratings for 0% PWM duty cycle have zero speed at 0%. When control terminal is open, speed is the same as at 0% duty cycle.

Note: The » mark indicates Short Lead Time Service applicable models. See p. 664 for details.

Airflow - Static Pressure Characteristics

9ADW5701H5002, 9ADW5701H5T02
No sensor

Operating voltage range

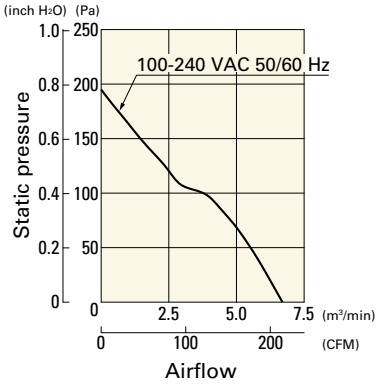

9ADW5701H5H001, 9ADW5701H5HT01
With low-speed sensor

Operating voltage range

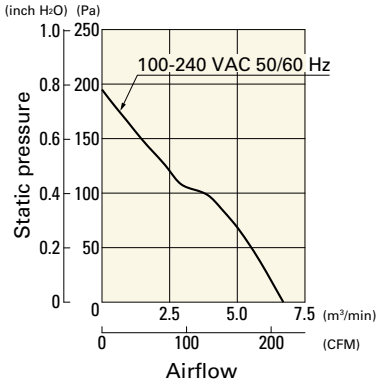

Airflow - Static Pressure Characteristics / PWM Duty - Speed Characteristics Example

9ADW5701P5H003, 9ADW5701P5HT03 With pulse sensor with PWM control

PWM duty cycle

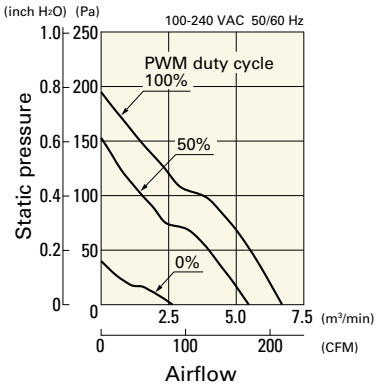

PWM duty - Speed characteristics example

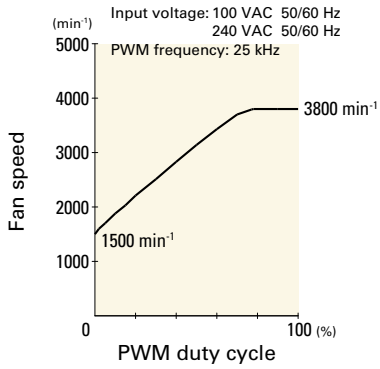

Connection Schematic

without Sensor

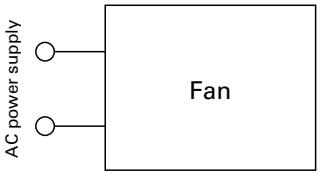

with Low-speed sensor

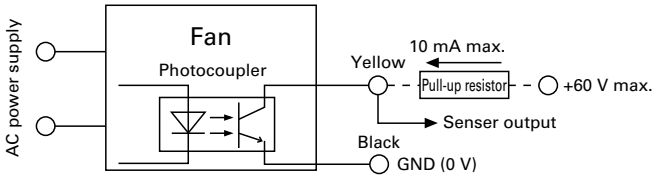

with PWM control and pulse sensor

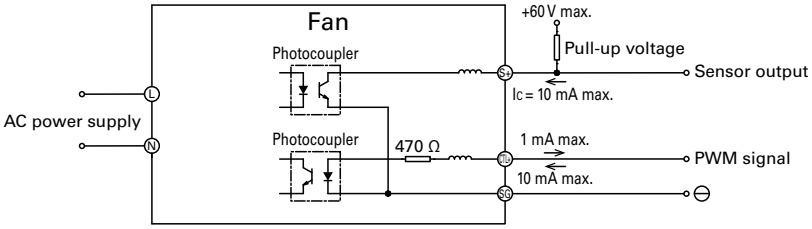

Dimensions (unit: mm) (With pulse sensor with PWM control)

Lead wire model

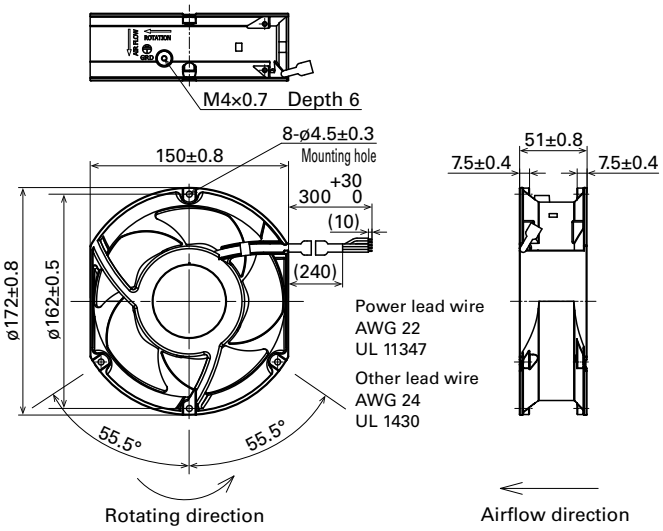

Terminal model

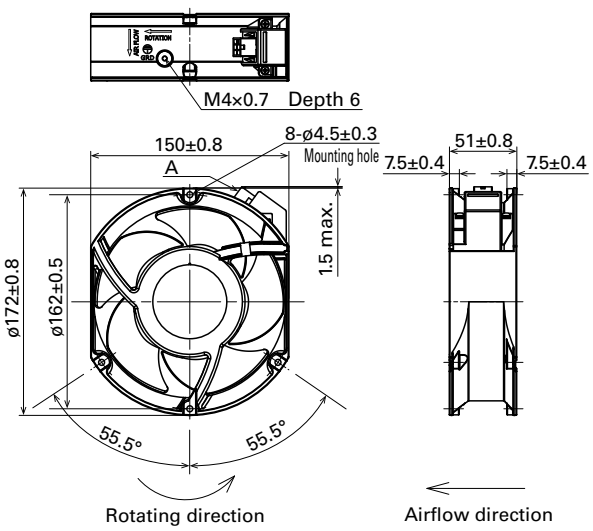

A Connector contact

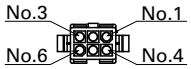

Pin assignment
Connector (Model no.:TE Connectivity: 1-172160-9)

Pin No.	Function	Type
1	L	AC
2	No connection	-
3	N	AC
4	PWM	DC
5	GND	DC
6	Sensor	DC

Reference Dimensions of Mounting Holes and Vent Opening (unit: mm)

Inlet side, Outlet side

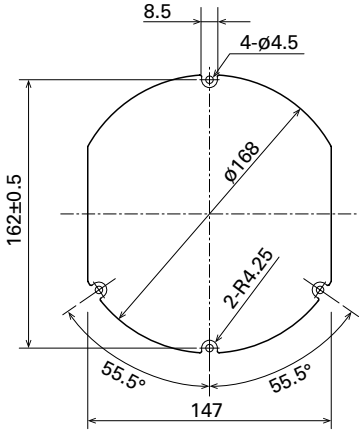

Options

Finger guards page: p. 592

Model no.: 109-1155

Terminal model wiring harness page: p. 603

Compatible with a fan without sensor.
Model no.: 489-1648, 489-1651

Compatible with a fan with low-speed sensor, and a fan with pulse sensor and PWM control.
Model no.: 489-1647, 489-1650

ACDC Fan

ø190×88 mm

San Ace 190AD 9ADTU type

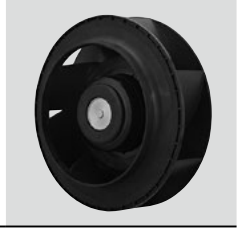

General Specifications

- Material ..... Motor case: Aluminum (Black coating), Impeller: Plastic (Flammability: UL 94V-0)
- Expected life ..... See the table below. (L10 life: 90% survival rate for continuous operation in free air at 60˚C, rated voltage) Expected life at 40°C is for reference only.
- Motor protection function ..... Locked rotor burnout protection For details, please refer to p. 608.
- Dielectric strength ..... 50/60 Hz, 1500 VAC, for 1 minute (between lead wire conductors and motor case)
- Insulation resistance ..... 10 MΩ min. at 500 VDC (between lead wire conductors and motor case)
- Sound pressure level (SPL) ..... A-weighted sound pressure level (SPL) at 1 m away from the air inlet.
- Storage temperature ..... -30 to +70˚C (Non-condensing)
- Lead wire ..... AC power input L: Orange N: Gray Ground Yellow / Green +10 VDC output Red ⊖Black Sensor Yellow Control Brown
- Mass ..... 1600 g

Specifications

When the optional inlet nozzle (109-1073) is mounted.

The models listed below **have ribs and a pulse sensor with PWM control.**

Model no.	Rated voltage [V]	Operating voltage range [V]	Frequency [Hz]	PWM duty cycle* [%]	Rated current [A]	Rated input [W]	Rated speed [min⁻¹]	Max. airflow [m³/min]	Max. airflow [CFM]	Max. static pressure [Pa]	Max. static pressure [inchH₂O]	SPL [dB (A)]	Operating temperature [˚C]	Expected life [h]
9ADTU11P0G001	115	90 to 132	50/60	100	2.5	150	4800	16.5	583	1200	4.82	72	-25 to +60	40000/60˚C (70000/40˚C)
				20	0.3	10	1000	3.3	116	52	0.21	43		
9ADTU23P0G001	230	180 to 264		100	1.3	150	4800	16.5	583	1200	4.82	72		
				20	0.2	10	1000	3.3	116	52	0.21	43		

PWM frequency is 1 kHz. Models without ratings for 0% PWM duty cycle have zero speed at 0%. When control terminal is open, speed is the same as at 100% duty cycle.

Airflow - Static Pressure Characteristics / PWM Duty - Speed Characteristics Example

9ADTU11P0G001 With pulse sensor with PWM control

PWM duty cycle

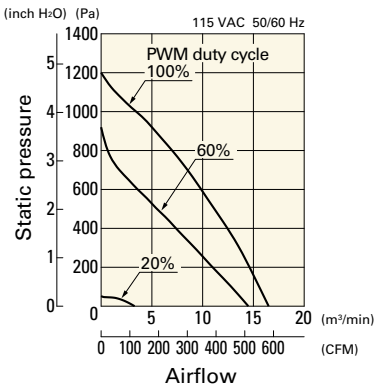

PWM duty - Speed characteristics example

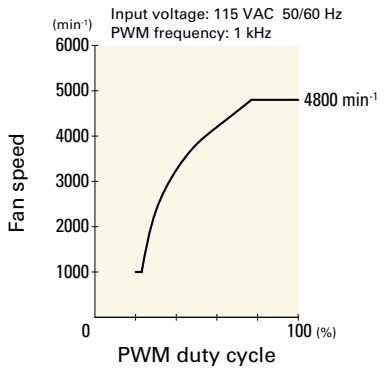

Airflow - Static Pressure Characteristics / PWM Duty - Speed Characteristics Example

9ADTU23P0G001 With pulse sensor with PWM control

PWM duty cycle

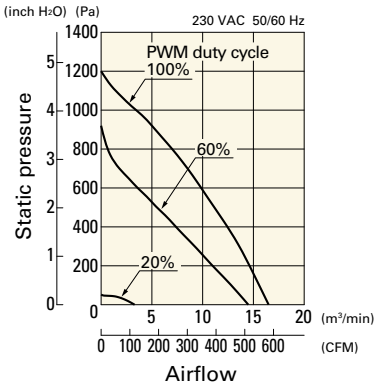

PWM duty - Speed characteristics example

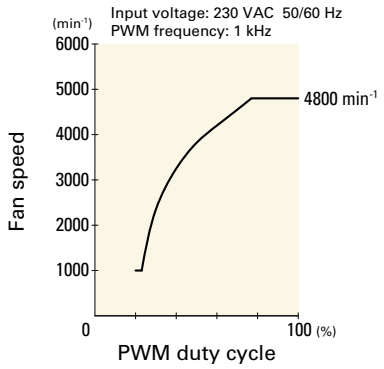

Connection Schematic

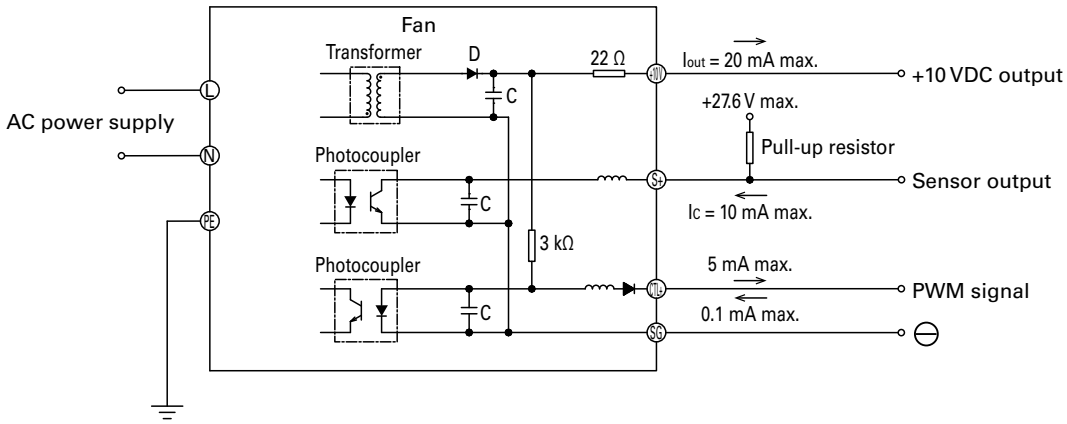

Dimensions (unit: mm)

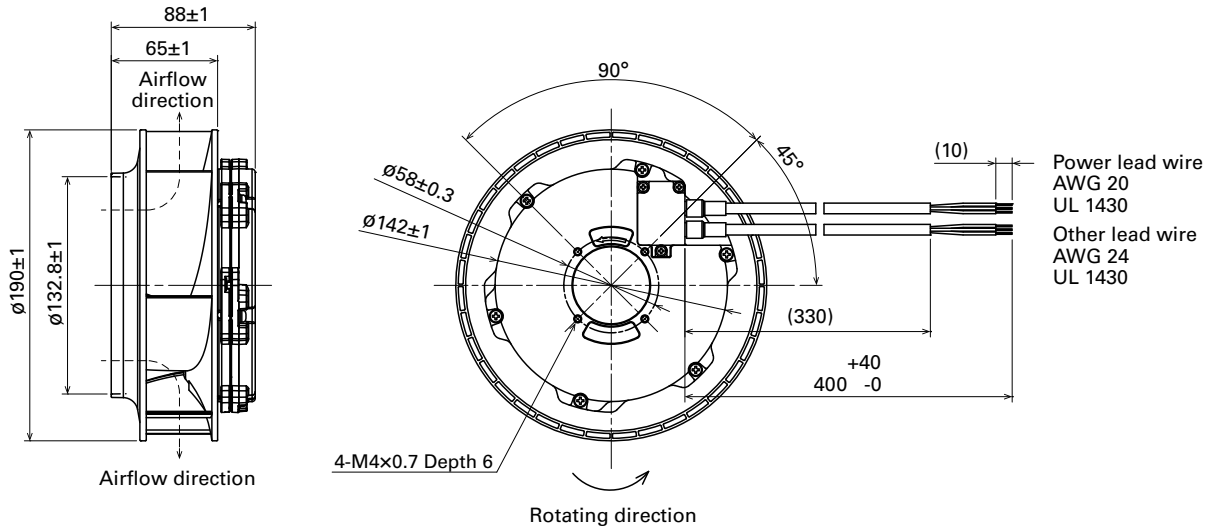

Reference Dimensions of Mounting Holes and Vent Opening (unit: mm)

Fan side

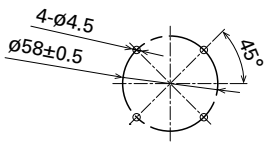

Inlet nozzle side

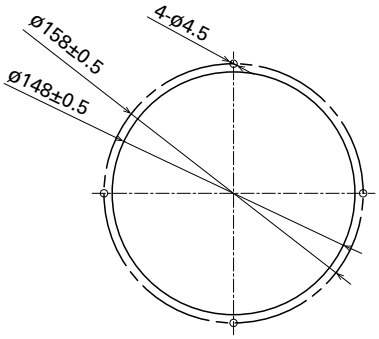

Reference Diagram for Mounting (unit: mm)

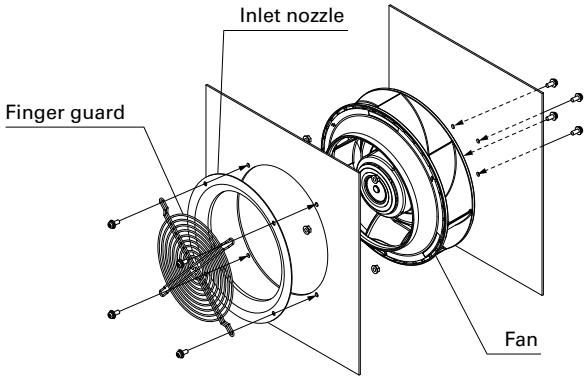

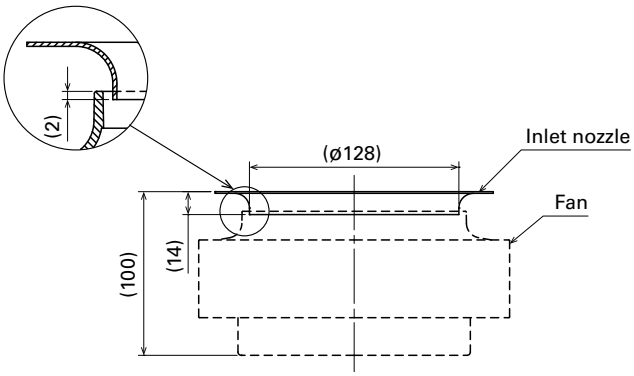

Options

Finger guards	page: p. 591
Model no.: 109-722, 109-722H	

Inlet nozzle	page: p. 595
Model no.: 109-1073, 109-1073H	

Errata sheet

ø190×88 mm

IP56

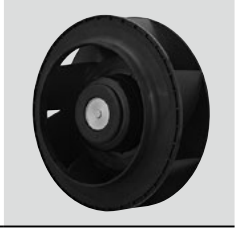

San Ace 190AD 9ADW1TU type

General Specifications

- Material ..... Motor case: Aluminum (Black coating), Impeller: Plastic (Flammability: UL 94V-0)
- Expected life ..... See the table below. (L10 life: 90% survival rate for continuous operation in indoor free air at 60°C, rated voltage) Expected life at 40°C is for reference only.
- Motor protection function ..... Locked rotor burnout protection For details, please refer to p. 608.
- Dielectric strength ..... 50/60 Hz, 1500 VAC, for 1 minute (between lead wire conductors and motor case)
- Insulation resistance ..... 10 MΩ min. at 500 VDC (between lead wire conductors and motor case)
- Sound pressure level (SPL) ..... A-weighted sound pressure level (SPL) at 1 m away from the air inlet.
- Storage temperature ..... -30 to +70°C (Non-condensing)
- Lead wire ..... AC power input L: Orange N: Gray Ground Yellow / Green +10 VDC output Red ⊖Black Sensor Yellow Control Brown
- Mass ..... 1700 g
- Ingress protection ..... IP56 For more information on IP rating, refer to p. 617.

Specifications

When the optional inlet nozzle (109-1073H) is mounted.

The models listed below **have ribs and a pulse sensor with PWM control.**

Model no.	Rated voltage [V]	Operating voltage range [V]	Frequency [Hz]	PWM duty cycle* [%]	Rated current [A]	Rated input [W]	Rated speed [min⁻¹]	Max. airflow [m³/min]	Max. airflow [CFM]	Max. static pressure [Pa]	Max. static pressure [inchH₂O]	SPL [dB (A)]	Operating temperature [°C]	Expected life [h]
9ADW1TU11P0G001	115	90 to 132	50/60	100	2.5	150	4800	16.5	583	1200	4.82	72	-25 to +60	40000/60°C (70000/40°C)
				20	0.3	10	1000	3.3	116	52	0.21	43		
9ADW1TU23P0G001	230	180 to 264		100	1.3	150	4800	16.5	583	1200	4.82	72		
				20	0.2	10	1000	3.3	116	52	0.21	43		

PWM frequency is 1 kHz. Models without ratings for 0% PWM duty cycle have zero speed at 0%. When control terminal is open, speed is the same as at 100% duty cycle.

Airflow - Static Pressure Characteristics / PWM Duty - Speed Characteristics Example

9ADW1TU11P0G001 With pulse sensor with PWM control

PWM duty cycle

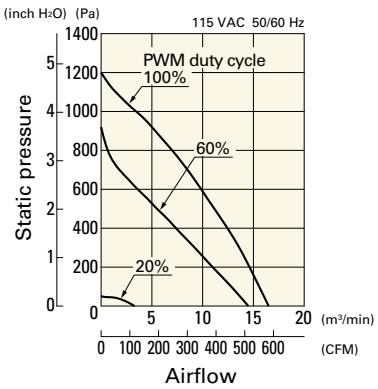

PWM duty - Speed characteristics example

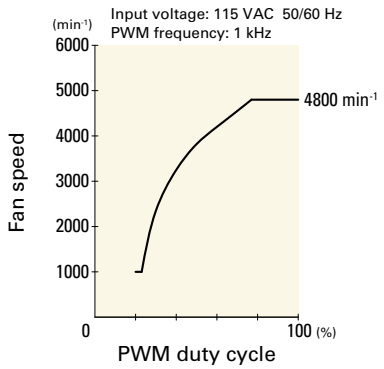

Airflow - Static Pressure Characteristics / PWM Duty - Speed Characteristics Example

9ADW1TU23P0G001 With pulse sensor with PWM control

PWM duty cycle

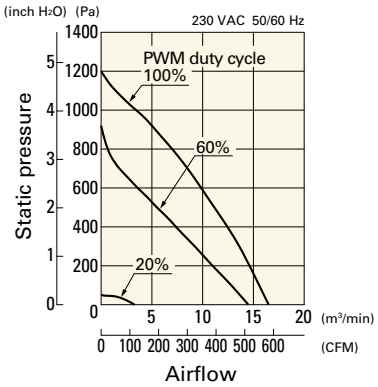

PWM duty - Speed characteristics example

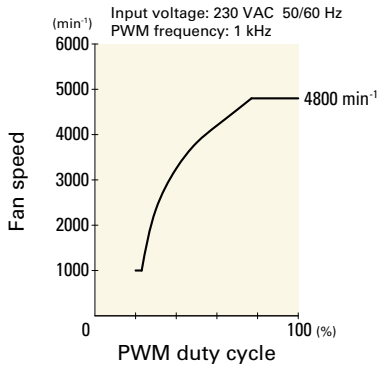

Connection Schematic

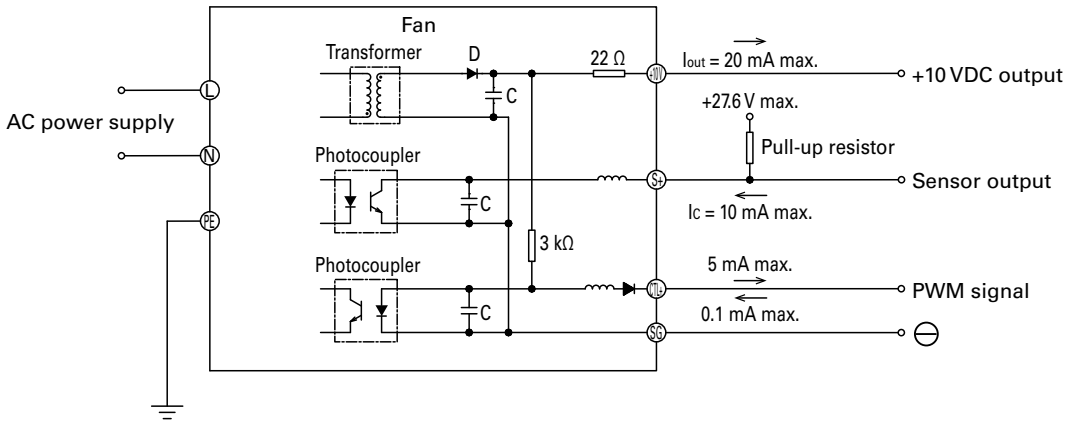

Dimensions (unit: mm)

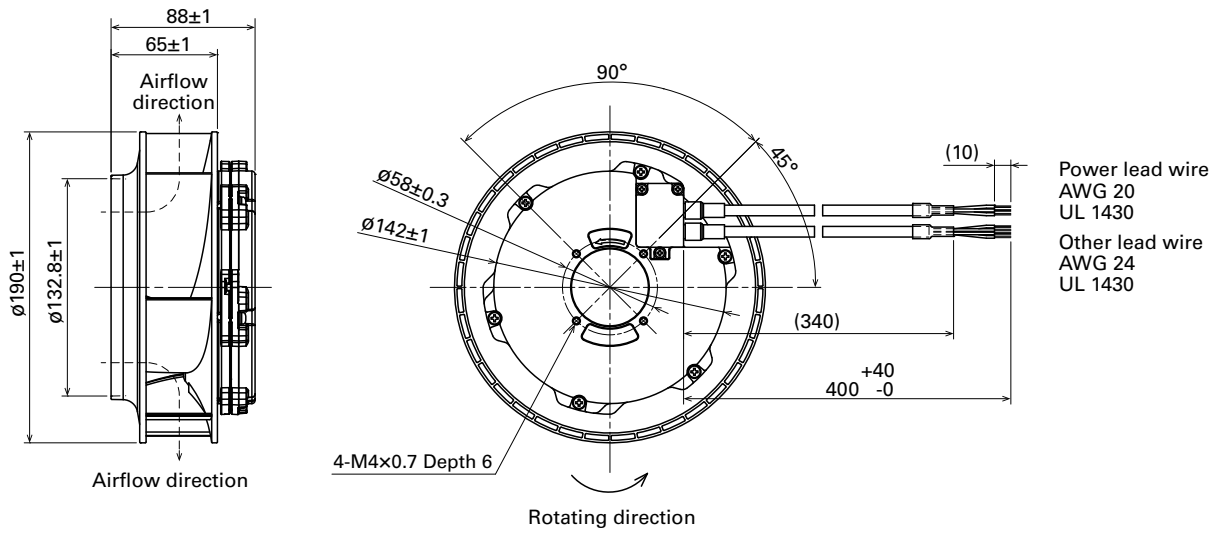

Reference Dimensions of Mounting Holes and Vent Opening (unit: mm)

Fan side

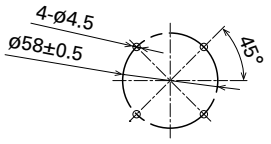

Inlet nozzle side

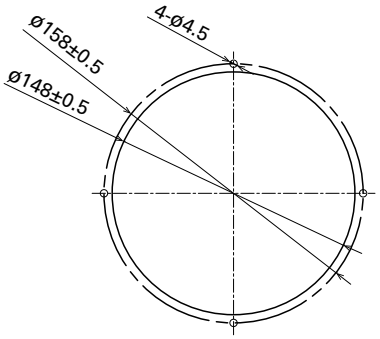

Reference Diagram for Mounting (unit: mm)

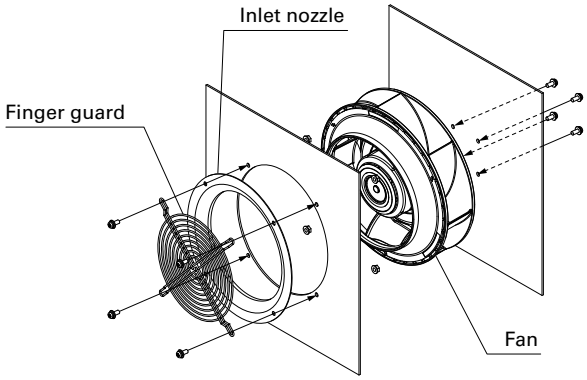

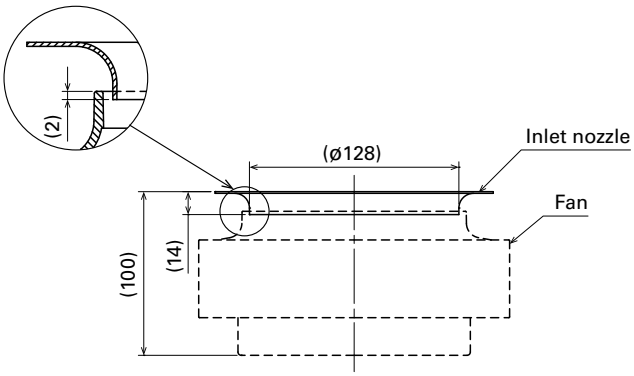

Options

Finger guards	page: p. 591
Model no.: 109-722, 109-722H	

Inlet nozzle	page: p. 595
Model no.: 109-1073, 109-1073H	

Errata sheet

ø225×99 mm

San Ace 225AD 9ADTS type

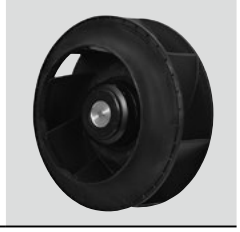

General Specifications

- Material ..... Motor case: Aluminum (Black coating), Impeller: Plastic (Flammability: UL 94V-0)
- Expected life ..... See the table below. (L10 life: 90% survival rate for continuous operation in free air at 60°C, rated voltage) Expected life at 40°C is for reference only.
- Motor protection function ..... Locked rotor burnout protection For details, please refer to p. 608.
- Dielectric strength ..... 50/60 Hz, 1500 VAC, for 1 minute (between lead wire conductors and motor case)
- Insulation resistance ..... 10 MΩ min. at 500 VDC (between lead wire conductors and motor case)
- Sound pressure level (SPL) ..... A-weighted sound pressure level (SPL) at 1 m away from the air inlet.
- Storage temperature ..... -30 to +70°C (Non-condensing)
- Lead wire ..... AC power input L: Orange N: Gray Ground Yellow / Green +10 VDC output Red ⊖Black Sensor Yellow Control Brown
- Mass ..... 1800 g

Specifications

When the optional inlet nozzle (109-1134) is mounted.

The models listed below **have ribs and a pulse sensor with PWM control.**

Model no.	Rated voltage [V]	Operating voltage range [V]	Frequency [Hz]	PWM duty cycle* [%]	Rated current [A]	Rated input [W]	Rated speed [min⁻¹]	Max. airflow [m³/min]	Max. airflow [CFM]	Max. static pressure [Pa]	Max. static pressure [inchH₂O]	SPL [dB (A)]	Operating temperature [°C]	Expected life [h]
9ADTS11P0G001	115	90 to 132	50/60	100	2.23	155	3200	23.0	812	815	3.27	74	-20 to +60	40000/60°C (70000/40°C)
				20	0.3	10	1000	7.1	252	80	0.32	50		
9ADTS11P0F001				100	1.11	70	2450	17.6	621	480	1.93	68		
				20	0.3	10	1000	7.1	252	80	0.32	50		
9ADTS23P0G001	230	180 to 264		100	1.17	155	3200	23.0	812	815	3.27	74		
				20	0.2	10	1000	7.1	252	80	0.32	50		
9ADTS23P0F001				100	0.64	70	2450	17.6	621	480	1.93	68		
				20	0.2	10	1000	7.1	252	80	0.32	50		

PWM frequency is 1 kHz. Models without ratings for 0% PWM duty cycle have zero speed at 0%. When control terminal is open, speed is the same as at 100% duty cycle.

Airflow - Static Pressure Characteristics / PWM Duty - Speed Characteristics Example

9ADTS11P0G001 With pulse sensor with PWM control

PWM duty cycle

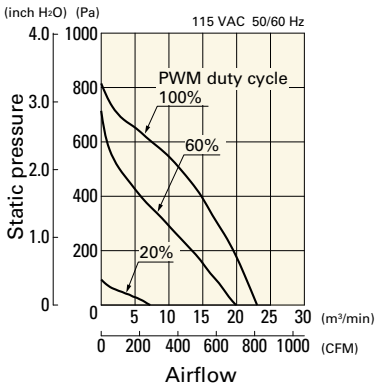

PWM duty - Speed characteristics example

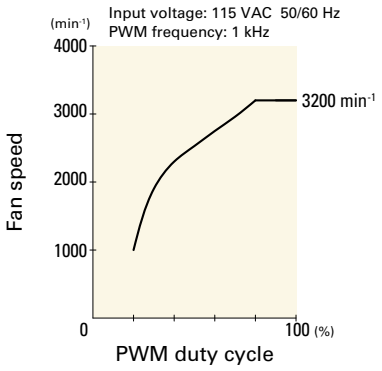

Airflow - Static Pressure Characteristics / PWM Duty - Speed Characteristics Example

9ADTS11P0F001 With pulse sensor with PWM control

PWM duty cycle

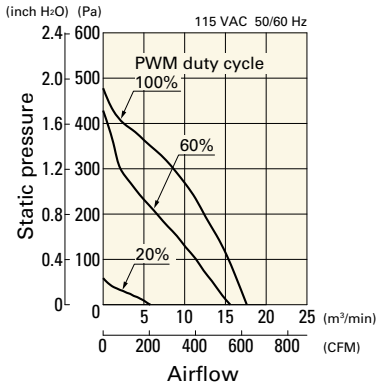

PWM duty - Speed characteristics example

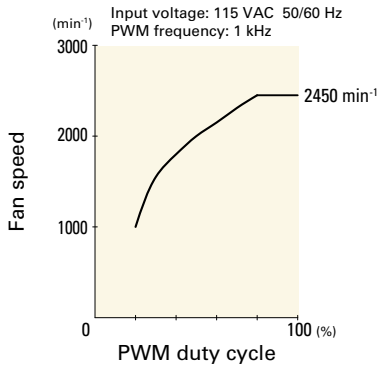

9ADTS23P0G001 With pulse sensor with PWM control

PWM duty cycle

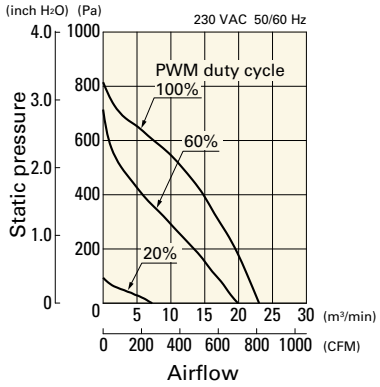

PWM duty - Speed characteristics example

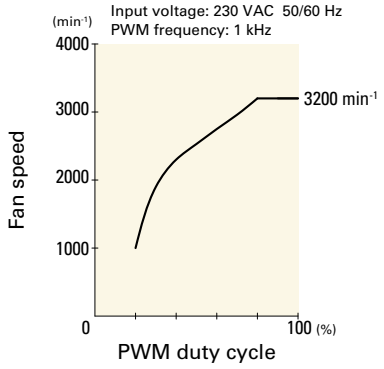

9ADTS23P0F001 With pulse sensor with PWM control

PWM duty cycle

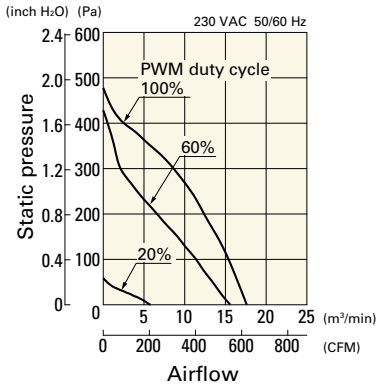

PWM duty - Speed characteristics example

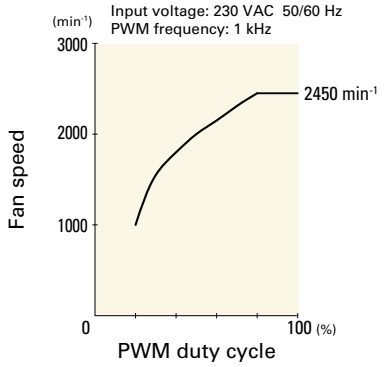

Connection Schematic

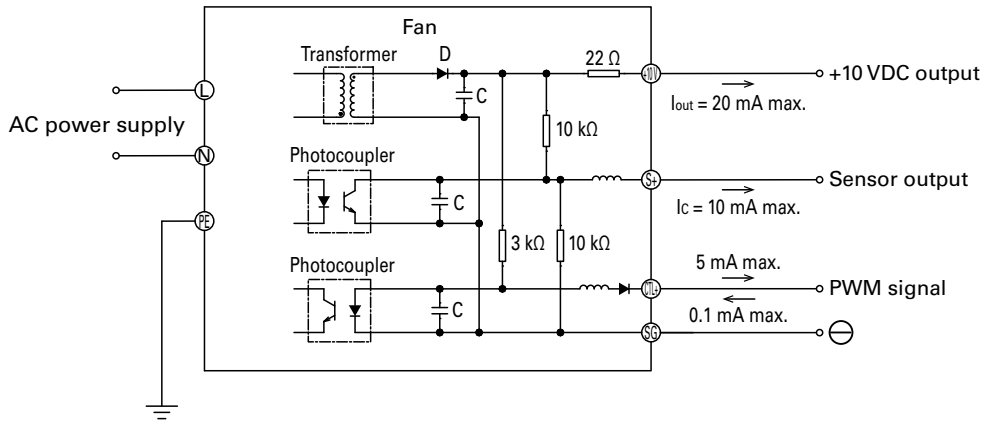

Dimensions (unit: mm)

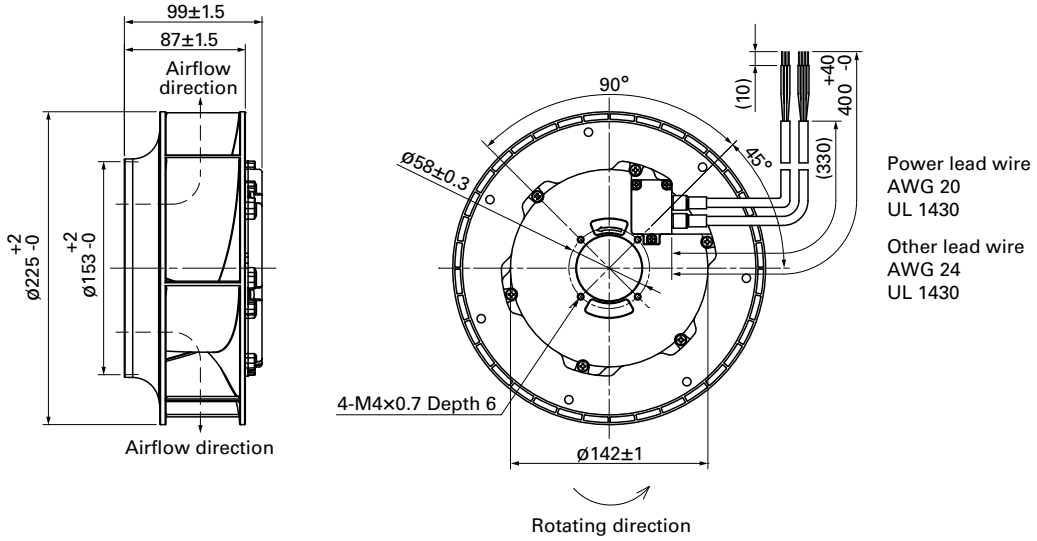

Reference Dimensions of Mounting Holes and Vent Opening (unit: mm)

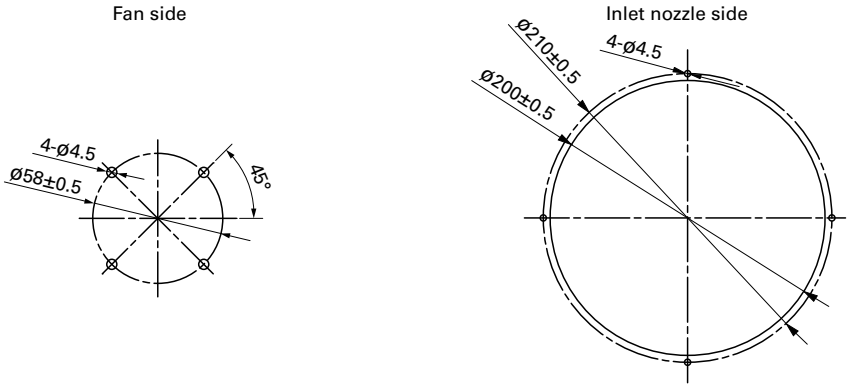

Reference Diagram for Mounting (unit: mm)

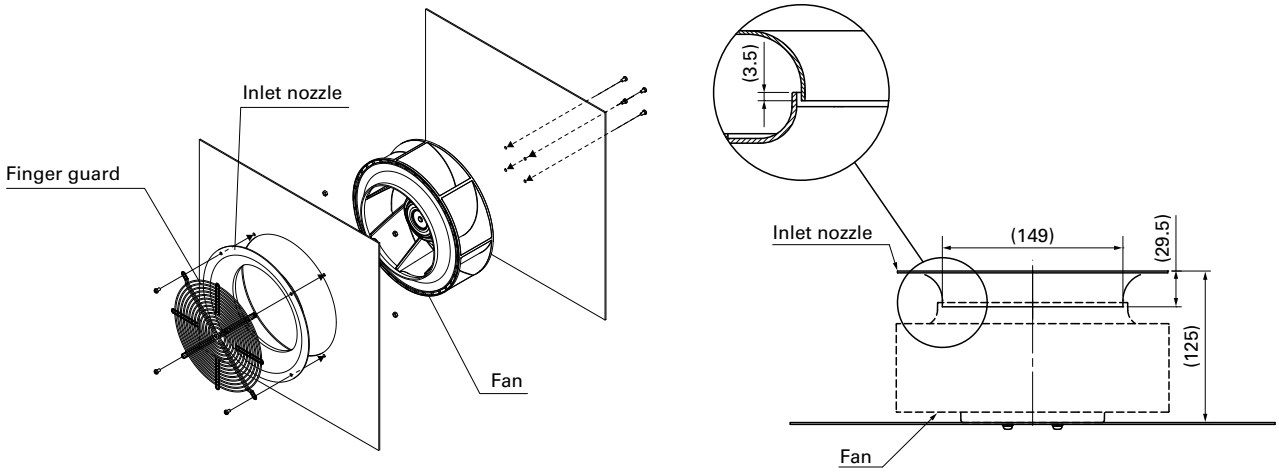

Options

Finger guards	page: p. 593
Model no.: 109-1137, 109-1137H	

Inlet nozzle	page: p. 595
Model no.: 109-1134, 109-1134H	

Errata sheet

ø225×99 mm

IP56

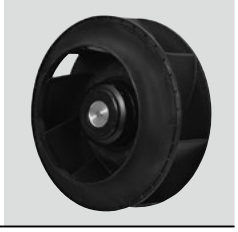

San Ace 225AD 9ADW1TS type

General Specifications

- Material ..... Motor case: Aluminum (Black coating), Impeller: Plastic (Flammability: UL 94V-0)
- Expected life ..... See the table below. (L10 life: 90% survival rate for continuous operation in indoor free air at 60˚C, rated voltage) Expected life at 40°C is for reference only.
- Motor protection function ..... Locked rotor burnout protection For details, please refer to p. 608.
- Dielectric strength ..... 50/60 Hz, 1500 VAC, for 1 minute (between lead wire conductors and motor case)
- Insulation resistance ..... 10 MΩ min. at 500 VDC (between lead wire conductors and motor case)
- Sound pressure level (SPL) ..... A-weighted sound pressure level (SPL) at 1 m away from the air inlet.
- Storage temperature ..... -30 to +70˚C (Non-condensing)
- Lead wire ..... AC power input L: Orange N: Gray Ground Yellow / Green +10 VDC output Red ⊖Black Sensor Yellow Control Brown
- Mass ..... 1900 g
- Ingress protection ..... IP56 For more information on IP rating, refer to p. 617.

Specifications

When the optional inlet nozzle (109-1134H) is mounted.

The models listed below **have ribs and a pulse sensor with PWM control.**

Model no.	Rated voltage [V]	Operating voltage range [V]	Frequency [Hz]	PWM duty cycle* [%]	Rated current [A]	Rated input [W]	Rated speed [min⁻¹]	Max. airflow [m³/min]	Max. airflow [CFM]	Max. static pressure [Pa]	Max. static pressure [inchH₂O]	SPL [dB (A)]	Operating temperature [˚C]	Expected life [h]
9ADW1TS11P0H001	115	90 to 132	50/60	100	2.06	140	3100	22.3	787	760	3.05	73	-20 to +60	40000/60˚C (70000/40˚C)
				20	0.3	11	1000	7.1	252	80	0.32	50		
9ADW1TS11P0M001				100	1.08	61	2350	16.9	597	440	1.77	67		
				20	0.3	11	1000	7.1	252	80	0.32	50		
9ADW1TS23P0H001	230	180 to 264		100	1.06	140	3100	22.3	787	760	3.05	73		
				20	0.2	11	1000	7.1	252	80	0.32	50		
9ADW1TS23P0M001				100	0.57	61	2350	16.9	597	440	1.77	67		
				20	0.2	11	1000	7.1	252	80	0.32	50		

PWM frequency is 1 kHz. Models without ratings for 0% PWM duty cycle have zero speed at 0%. When control terminal is open, speed is the same as at 100% duty cycle.

Airflow - Static Pressure Characteristics / PWM Duty - Speed Characteristics Example

9ADW1TS11P0H001 With pulse sensor with PWM control

PWM duty cycle

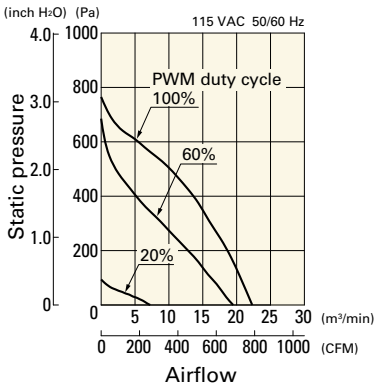

PWM duty - Speed characteristics example

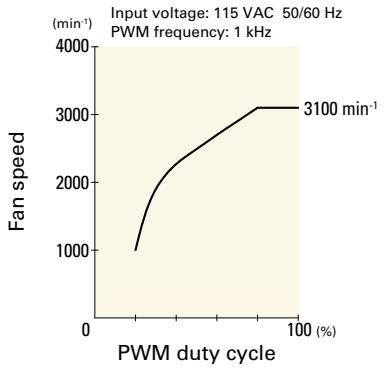

Airflow - Static Pressure Characteristics / PWM Duty - Speed Characteristics Example

9ADW1TS11P0M001 With pulse sensor with PWM control

PWM duty cycle

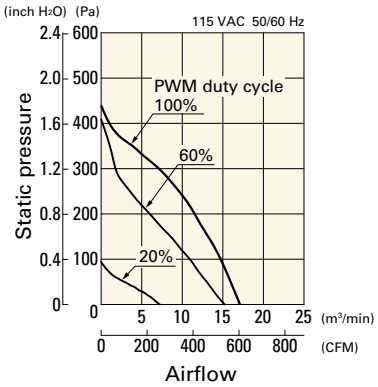

PWM duty - Speed characteristics example

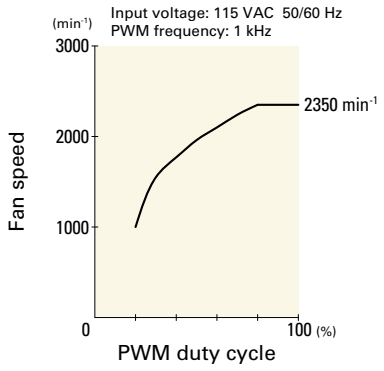

9ADW1TS23P0H001 With pulse sensor with PWM control

PWM duty cycle

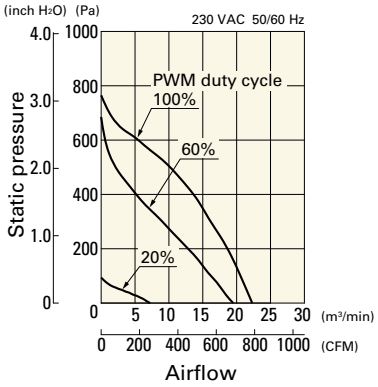

PWM duty - Speed characteristics example

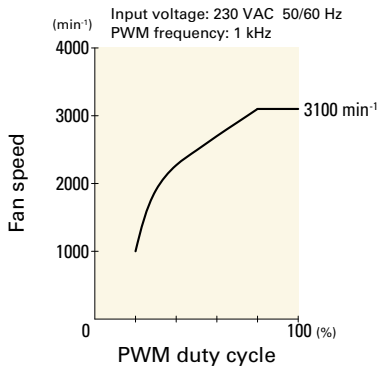

9ADW1TS23P0M001 With pulse sensor with PWM control

PWM duty cycle

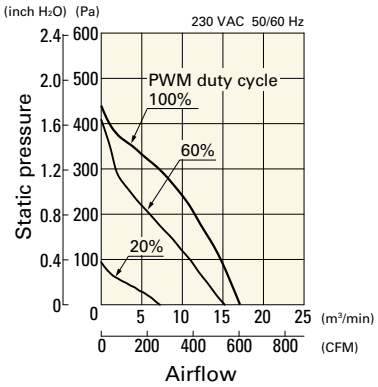

PWM duty - Speed characteristics example

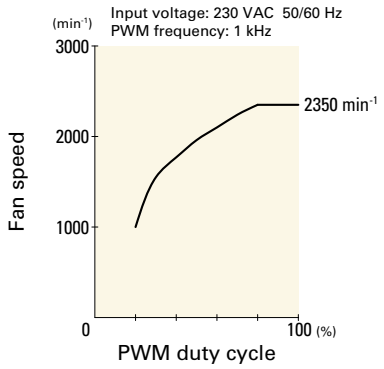

Connection Schematic

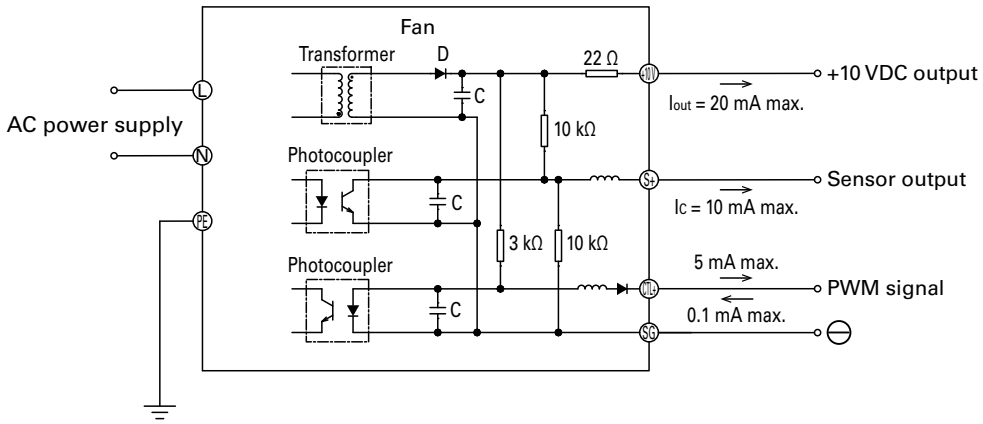

Dimensions (unit: mm)

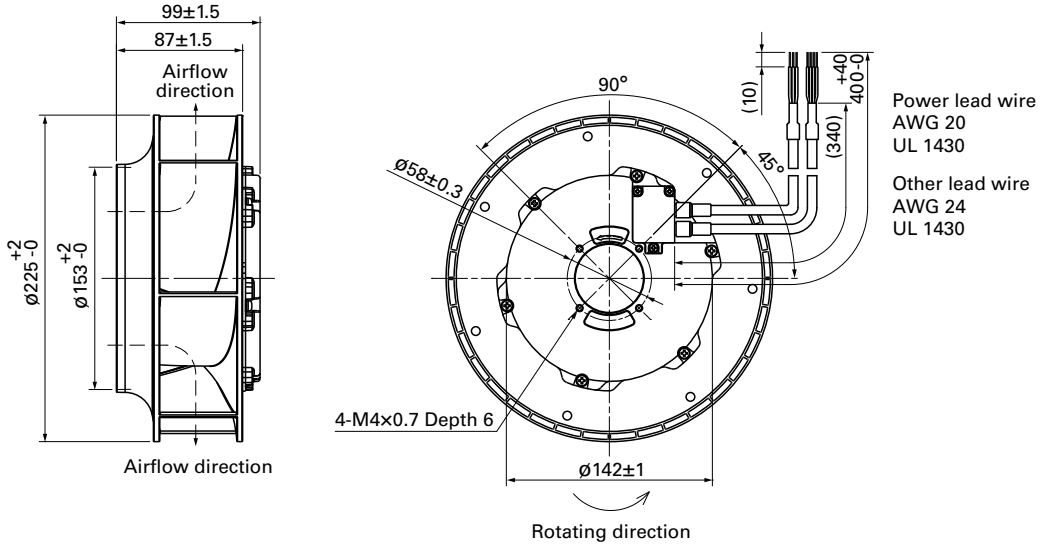

Reference Dimensions of Mounting Holes and Vent Opening (unit: mm)

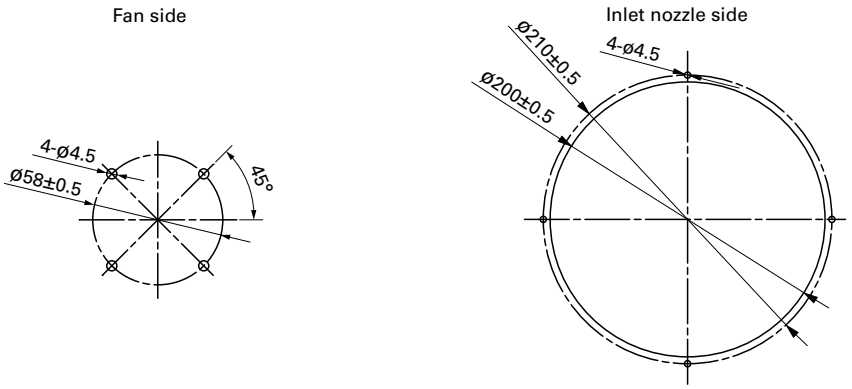

Reference Diagram for Mounting (unit: mm)

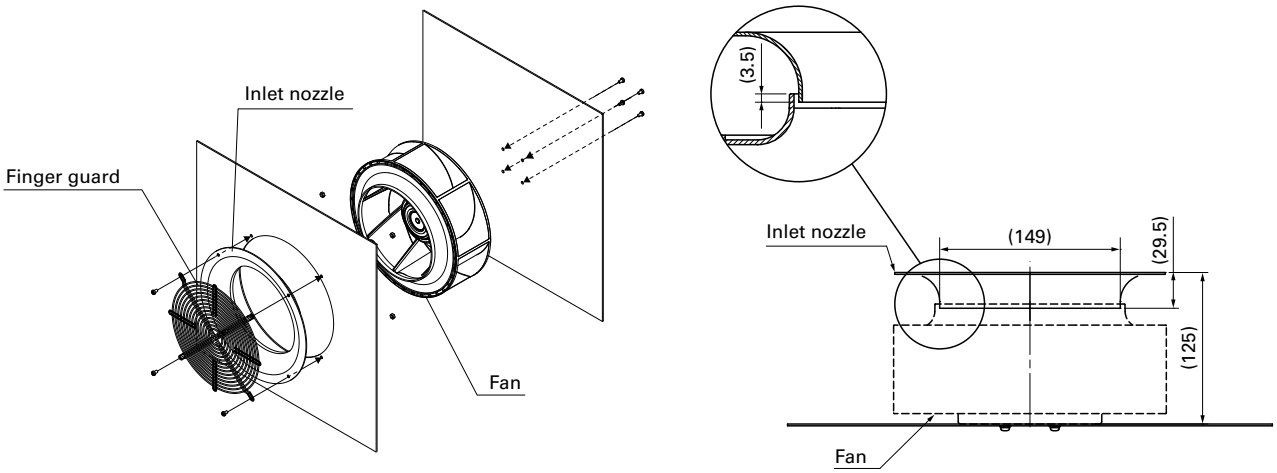

Options

Finger guards	page: p. 593
Model no.: 109-1137, 109-1137H	

Inlet nozzle	page: p. 595
Model no.: 109-1134, 109-1134H	

ACDC Fan

ø250×99 mm

San Ace 250AD 9ADTV type

General Specifications

- Material ..... Motor case: Aluminum (Black coating), Impeller: Plastic (Flammability: UL 94V-0)
- Expected life ..... See the table below. (L10 life: 90% survival rate for continuous operation in free air at 60˚C, rated voltage) Expected life at 40°C is for reference only.
- Motor protection function ..... Locked rotor burnout protection For details, please refer to p. 608.
- Dielectric strength ..... 50/60 Hz, 1500 VAC, for 1 minute (between lead wire conductors and motor case)
- Insulation resistance ..... 10 MΩ min. at 500 VDC (between lead wire conductors and motor case)
- Sound pressure level (SPL) ..... A-weighted sound pressure level (SPL) at 1 m away from the air inlet.
- Storage temperature ..... -30 to +70˚C (Non-condensing)
- Lead wire ..... AC power input L: Orange N: Gray Ground Yellow / Green +10 VDC output Red ⊖Black Sensor Yellow Control Brown
- Mass ..... 1920 g

Specifications

When the optional inlet nozzle (109-1151) is mounted.

The models listed below **have ribs and a pulse sensor with PWM control.**

Model no.	Rated voltage [V]	Operating voltage range [V]	Frequency [Hz]	PWM duty cycle* [%]	Rated current [A]	Rated input [W]	Rated speed [min⁻¹]	Max. airflow [m³/min]	Max. airflow [CFM]	Max. static pressure [Pa]	Max. static pressure [inchH₂O]	SPL [dB (A)]	Operating temperature [˚C]	Expected life [h]
9ADTV11P0G001	115	90 to 132	50/60	100	2.3	140	2700	26.5	936	650	2.61	71	-25 to +60	40000/60˚C (70000/40˚C)
				20	0.3	10	1000	9.6	339	88	0.35	57		
9ADTV23P0G001	230	180 to 264		100	1.2	140	2700	26.5	936	650	2.61	71		
				20	0.2	10	1000	9.6	339	88	0.35	57		

PWM frequency is 1 kHz. Models without ratings for 0% PWM duty cycle have zero speed at 0%. When control terminal is open, speed is the same as at 100% duty cycle.

Airflow - Static Pressure Characteristics / PWM Duty - Speed Characteristics Example

9ADTV11P0G001 With pulse sensor with PWM control

PWM duty cycle

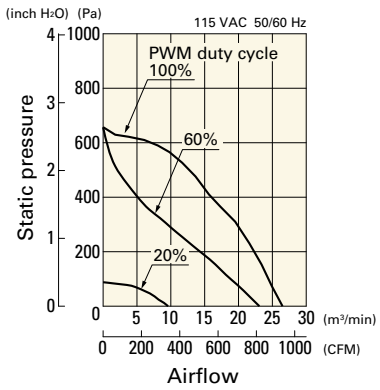

PWM duty - Speed characteristics example

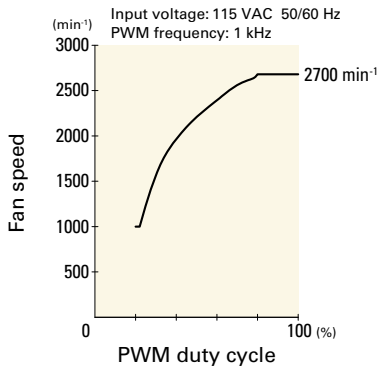

Airflow - Static Pressure Characteristics / PWM Duty - Speed Characteristics Example

9ADTV23P0G001 With pulse sensor with PWM control

PWM duty cycle

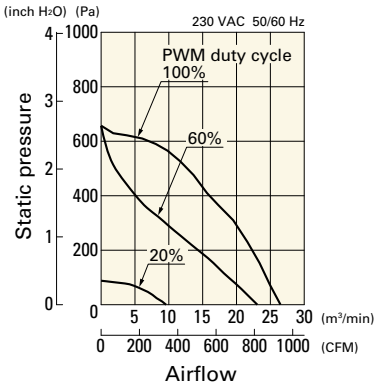

PWM duty - Speed characteristics example

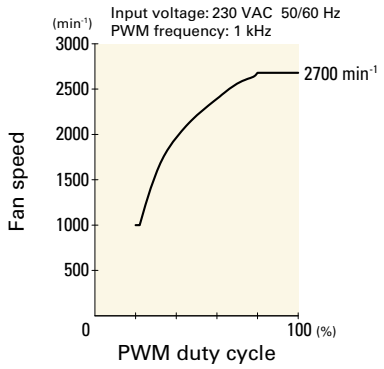

Connection Schematic

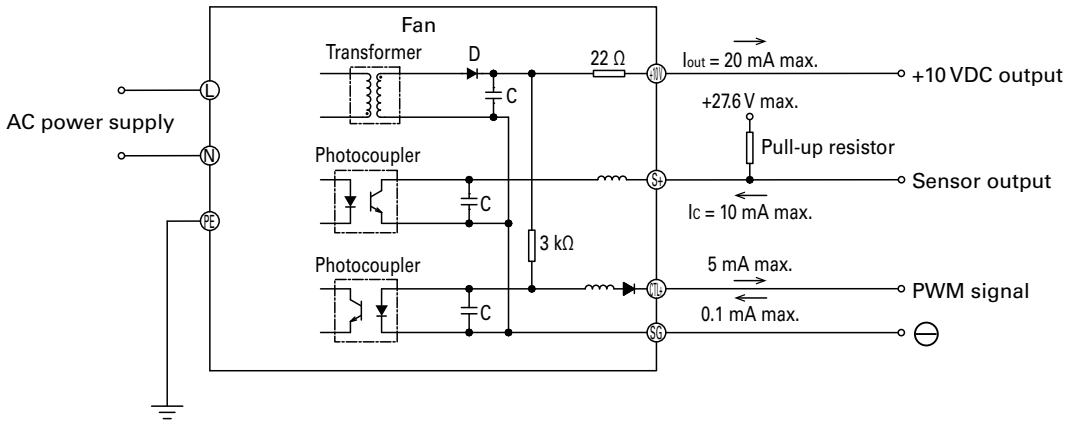

Dimensions (unit: mm)

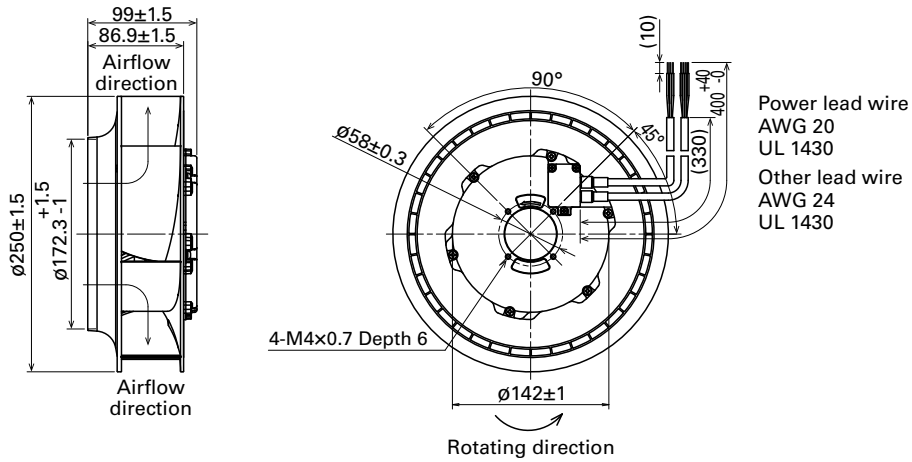

Reference Dimensions of Mounting Holes and Vent Opening (unit: mm)

Fan side

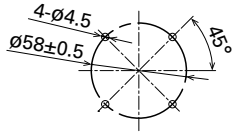

Inlet nozzle side

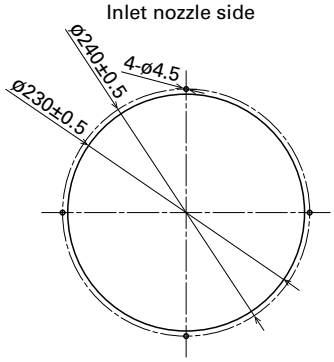

Reference Diagram for Mounting (unit: mm)

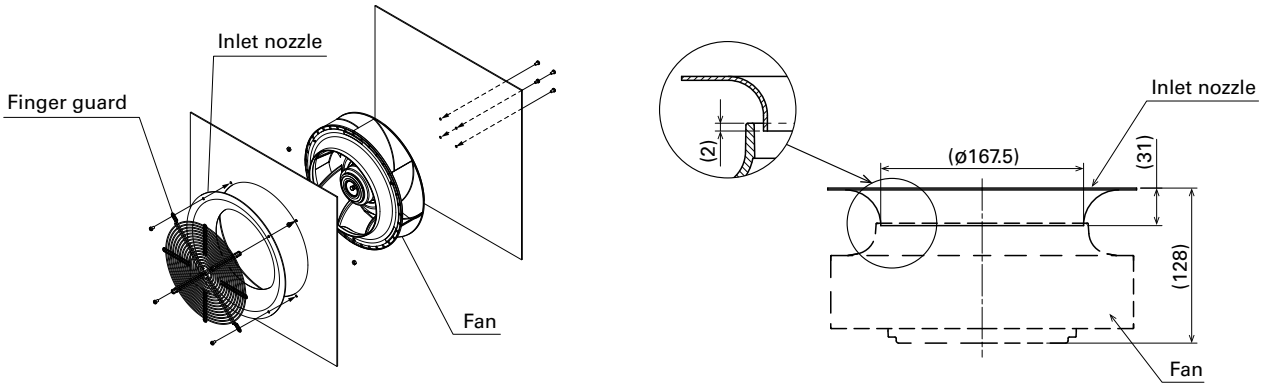

Options

Finger guards	page: p. 594

Model no.: 109-1152, 109-1152H

Inlet nozzle	page: p. 595

Model no.: 109-1151,109-1151H

Errata sheet

ø250×99 mm

IP56

San Ace 250AD 9ADW1TV type

General Specifications

- Material ..... Motor case: Aluminum (Black coating), Impeller: Plastic (Flammability: UL 94V-0)
- Expected life ..... See the table below. (L10 life: 90% survival rate for continuous operation in indoor free air at 60°C, rated voltage) Expected life at 40°C is for reference only.
- Motor protection function ..... Locked rotor burnout protection For details, please refer to p. 608.
- Dielectric strength ..... 50/60 Hz, 1500 VAC, for 1 minute (between lead wire conductors and motor case)
- Insulation resistance ..... 10 MΩ min. at 500 VDC (between lead wire conductors and motor case)
- Sound pressure level (SPL) ..... A-weighted sound pressure level (SPL) at 1 m away from the air inlet.
- Storage temperature ..... -30 to +70°C (Non-condensing)
- Lead wire ..... AC power input L: Orange N: Gray Ground Yellow / Green +10 VDC output Red ⊖Black Sensor Yellow Control Brown
- Mass ..... 2020 g
- Ingress protection ..... IP56 For more information on IP rating, refer to p. 617.

Specifications

When the optional inlet nozzle (109-1151H) is mounted.

The models listed below **have ribs and a pulse sensor with PWM control.**

Model no.	Rated voltage [V]	Operating voltage range [V]	Frequency [Hz]	PWM duty cycle* [%]	Rated current [A]	Rated input [W]	Rated speed [min⁻¹]	Max. airflow [m³/min]	Max. airflow [CFM]	Max. static pressure [Pa]	Max. static pressure [inchH₂O]	SPL [dB (A)]	Operating temperature [°C]	Expected life [h]
9ADW1TV11P0G001	115	90 to 132	50/60	100	2.3	140	2700	26.5	936	650	2.61	71	-25 to +60	40000/60°C (70000/40°C)
				20	0.3	10	1000	9.6	339	88	0.35	57		
9ADW1TV23P0G001	230	180 to 264		100	1.2	140	2700	26.5	936	650	2.61	71		
				20	0.2	10	1000	9.6	339	88	0.35	57		

PWM frequency is 1 kHz. Models without ratings for 0% PWM duty cycle have zero speed at 0%. When control terminal is open, speed is the same as at 100% duty cycle.

Airflow - Static Pressure Characteristics / PWM Duty - Speed Characteristics Example

9ADW1TV11P0G001 With pulse sensor with PWM control

PWM duty cycle

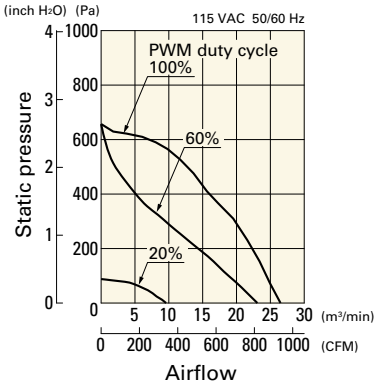

PWM duty - Speed characteristics example

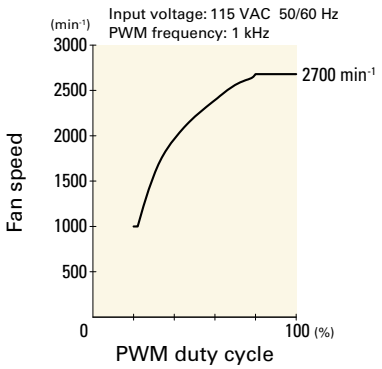

Airflow - Static Pressure Characteristics / PWM Duty - Speed Characteristics Example

9ADW1TV23P0G001 With pulse sensor with PWM control

PWM duty cycle

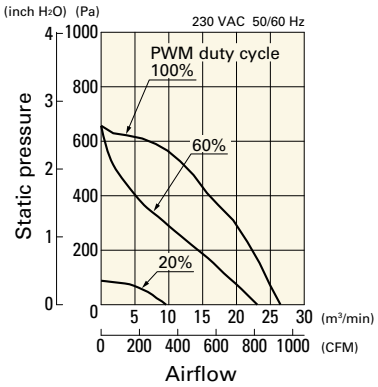

PWM duty - Speed characteristics example

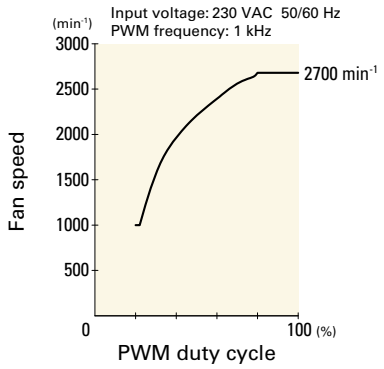

Connection Schematic

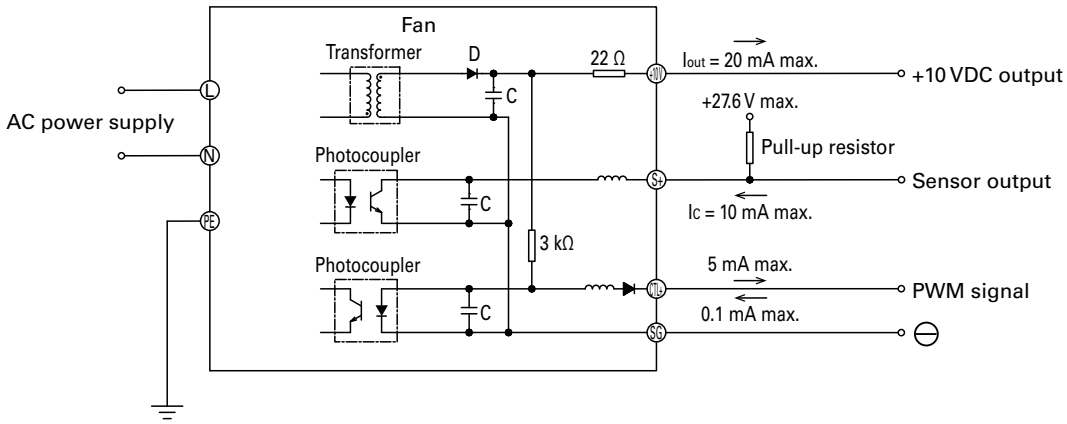

Dimensions (unit: mm)

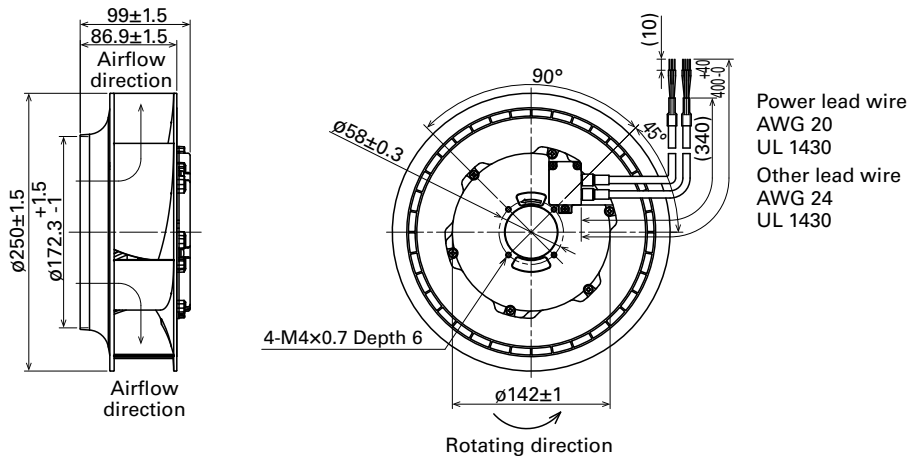

Reference Dimensions of Mounting Holes and Vent Opening (unit: mm)

Fan side

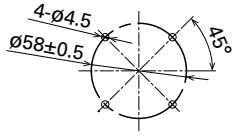

Inlet nozzle side

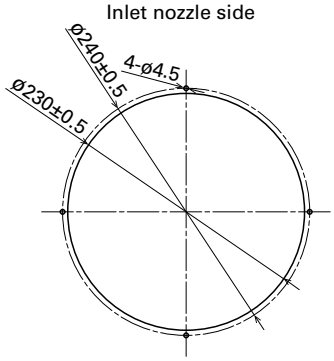

Reference Diagram for Mounting (unit: mm)

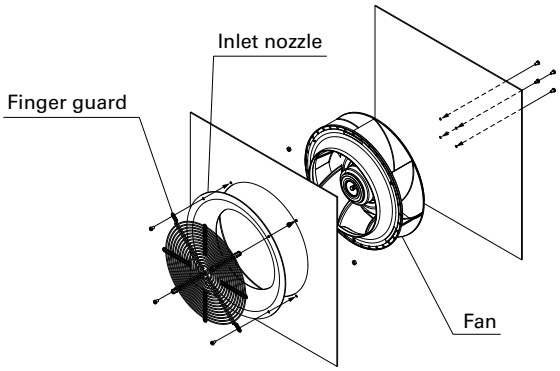

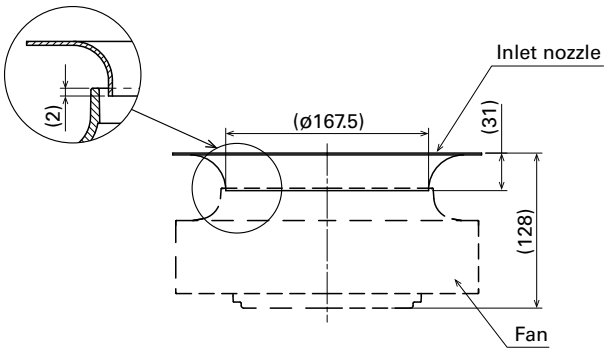

Options

Finger guards	page: p. 594

Model no.: 109-1152, 109-1152H

Inlet nozzle	page: p. 595

Model no.: 109-1151,109-1151H

Bracket-mounted ACDC Fan

270×270×119 mm

San Ace 225AD 9ADB1TS type

General Specifications

- Material ..... Motor case: Aluminum (Black coating), Impeller: Plastic (Flammability: UL 94V-0)
  Bracket: Aluminum (Black coating), Plastic (Flammability: UL94V-0)
- Expected life ..... See the table below. (L10 life: 90% survival rate for continuous operation in free air at 60°C, rated voltage)
  Expected life at 40°C is for reference only.
- Motor protection function ..... Locked rotor burnout protection
  For details, please refer to p. 608.
- Dielectric strength ..... 50/60 Hz, 1500 VAC, for 1 minute (between lead wire conductors and bracket)
- Insulation resistance ..... 10 MΩ min. at 500 VDC (between lead wire conductors and bracket)
- Sound pressure level (SPL) ..... A-weighted sound pressure level (SPL) at 1 m away from the air inlet.
- Storage temperature ..... -30 to +70°C (Non-condensing)
- Lead wire ..... AC power input L: Orange N: Gray Ground Yellow / Green
  +10 VDC output Red ⊖Black Sensor Yellow Control Brown
- Mass ..... 2500 g

Specifications

The models listed below **have ribs and a pulse sensor with PWM control.**

Model no.	Rated voltage [V]	Operating voltage range [V]	Frequency [Hz]	PWM duty cycle* [%]	Rated current [A]	Rated input [W]	Rated speed [min⁻¹]	Max. airflow [m³/min]	Max. airflow [CFM]	Max. static pressure [Pa]	Max. static pressure [inchH₂O]	SPL [dB (A)]	Operating temperature [°C]	Expected life [h]
9ADB1TS11P0G001	115	90 to 132	50/60	100	2.23	155	3200	23.0	812	815	3.27	74	-20 to +60	40000/60°C (70000/40°C)
				20	0.3	10	1000	7.1	252	80	0.32	50		
9ADB1TS11P0F001				100	1.11	70	2450	17.6	621	480	1.93	68		
				20	0.3	10	1000	7.1	252	80	0.32	50		
9ADB1TS23P0G001	230	180 to 264		100	1.17	155	3200	23.0	812	815	3.27	74		
				20	0.2	10	1000	7.1	252	80	0.32	50		
9ADB1TS23P0F001				100	0.64	70	2450	17.6	621	480	1.93	68		
				20	0.2	10	1000	7.1	252	80	0.32	50		

PWM frequency is 1 kHz. Models without ratings for 0% PWM duty cycle have zero speed at 0%. When control terminal is open, speed is the same as at 100% duty cycle.

Airflow - Static Pressure Characteristics / PWM Duty - Speed Characteristics Example

9ADB1TS11P0G001 With pulse sensor with PWM control

PWM duty cycle

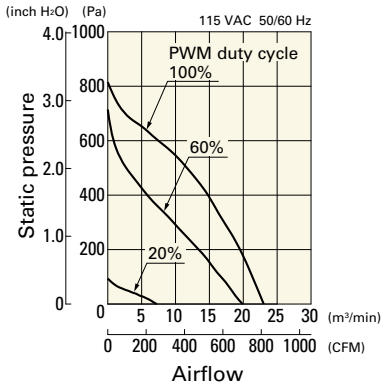

PWM duty - Speed characteristics example

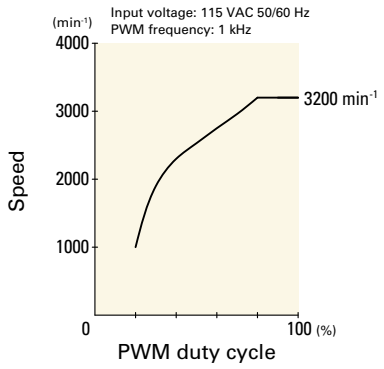

Airflow - Static Pressure Characteristics / PWM Duty - Speed Characteristics Example

9ADB1TS11P0F001 With pulse sensor with PWM control

PWM duty cycle

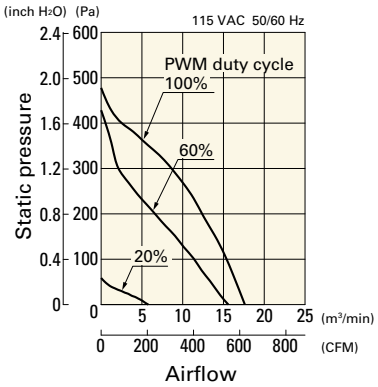

PWM duty - Speed characteristics example

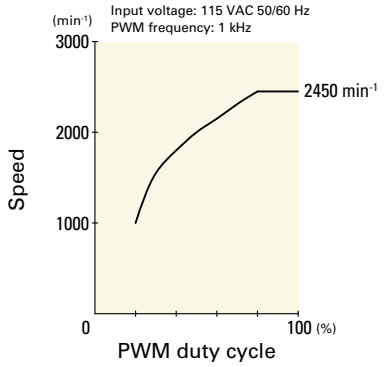

9ADB1TS23P0G001 With pulse sensor with PWM control

PWM duty cycle

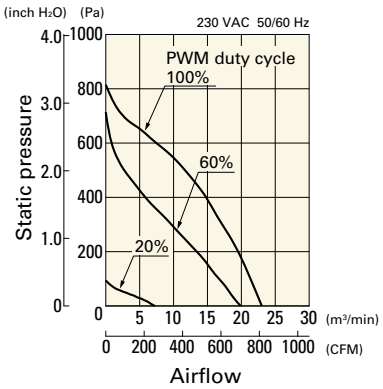

PWM duty - Speed characteristics example

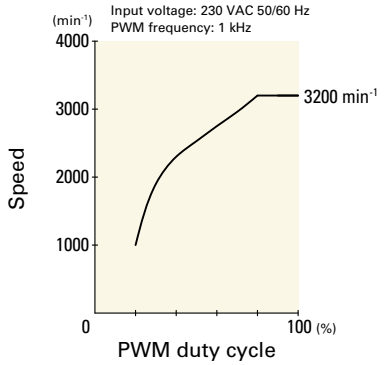

9ADB1TS23P0F001 With pulse sensor with PWM control

PWM duty cycle

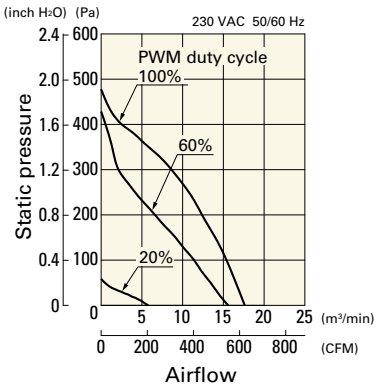

PWM duty - Speed characteristics example

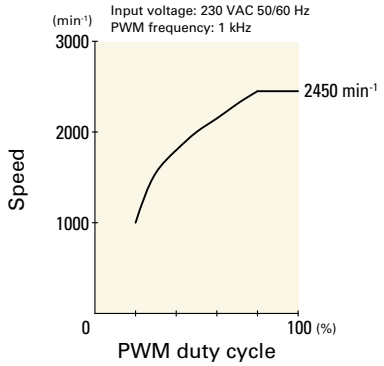

Connection Schematic

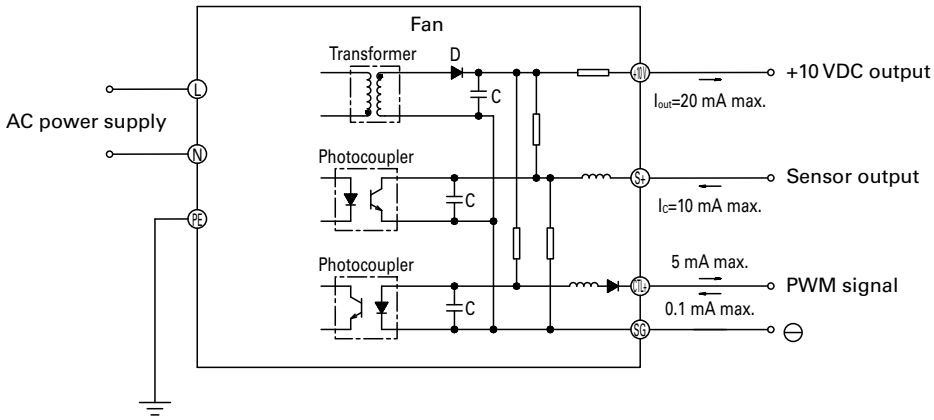

Dimensions (unit: mm)

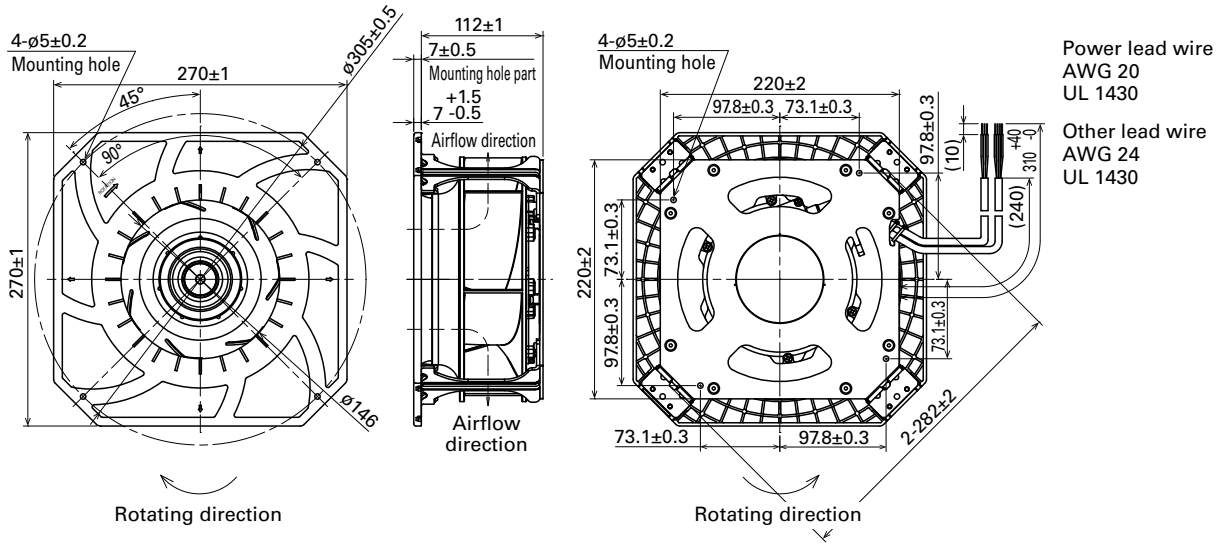

Reference Dimensions of Mounting Holes and Vent Opening (unit: mm)

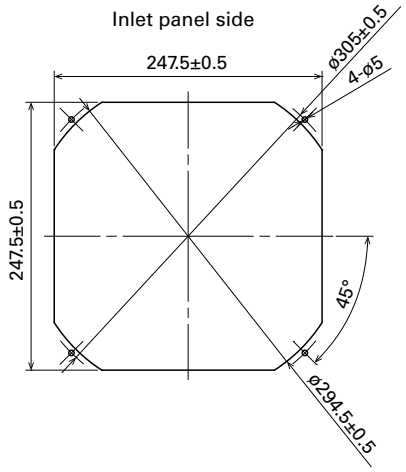

Reference Diagram for Mounting

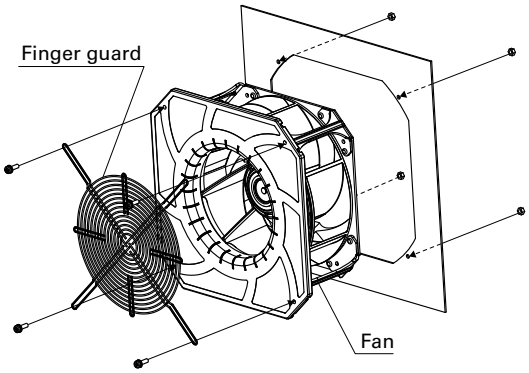

Options

Finger guards	page: p. 594

Model no.: 109-1146, 109-1146H

Errata sheet

Bracket-mounted ACDC Fan

270×270×119 mm

IP56

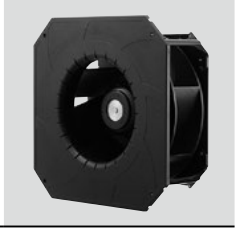

San Ace 225AD 9ADB1W1TS type

General Specifications

- Material ..... Motor case: Aluminum (Black coating), Impeller: Plastic (Flammability: UL 94V-0)
  Bracket: Aluminum (Black coating), Plastic (Flammability: UL94V-0)
- Expected life ..... See the table below. (L10 life: 90% survival rate for continuous operation in indoor free air at 60°C, rated voltage)
  Expected life at 40°C is for reference only.
- Motor protection function ..... Locked rotor burnout protection
  For details, please refer to p. 608.
- Dielectric strength ..... 50/60 Hz, 1500 VAC, for 1 minute (between lead wire conductors and bracket)
- Insulation resistance ..... 10 MΩ min. at 500 VDC (between lead wire conductors and bracket)
- Sound pressure level (SPL) ..... A-weighted sound pressure level (SPL) at 1 m away from the air inlet.
- Storage temperature ..... -30 to +70°C (Non-condensing)
- Lead wire ..... AC power input L: Orange N: Gray Ground Yellow / Green
  +10 VDC output Red ⊖Black Sensor Yellow Control Brown
- Mass ..... 2600 g
- Ingress protection ..... IP56 For more information on IP rating, refer to p. 617.

Specifications

The models listed below **have ribs and a pulse sensor with PWM control.**

Model no.	Rated voltage [V]	Operating voltage range [V]	Frequency [Hz]	PWM duty cycle* [%]	Rated current [A]	Rated input [W]	Rated speed [min⁻¹]	Max. airflow [m³/min]	Max. airflow [CFM]	Max. static pressure [Pa]	Max. static pressure [inchH₂O]	SPL [dB (A)]	Operating temperature [°C]	Expected life [h]
9ADB1W1TS11P0H001	115	90 to 132	50/60	100	2.06	140	3100	22.3	787	760	3.05	73	-20 to +60	40000/60°C (70000/40°C)
				20	0.3	11	1000	7.1	252	80	0.32	50		
9ADB1W1TS11P0M001				100	1.08	61	2350	16.9	597	440	1.77	67		
				20	0.3	11	1000	7.1	252	80	0.32	50		
9ADB1W1TS23P0H001	230	180 to 264		100	1.06	140	3100	22.3	787	760	3.05	73		
				20	0.2	11	1000	7.1	252	80	0.32	50		
9ADB1W1TS23P0M001				100	0.57	61	2350	16.9	597	440	1.77	67		
				20	0.2	11	1000	7.1	252	80	0.32	50		

PWM frequency is 1 kHz. Models without ratings for 0% PWM duty cycle have zero speed at 0%. When control terminal is open, speed is the same as at 100% duty cycle.

Airflow - Static Pressure Characteristics / PWM Duty - Speed Characteristics Example

9ADB1W1TS11P0H001 With pulse sensor with PWM control

PWM duty cycle

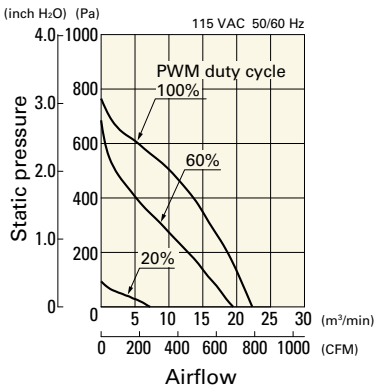

PWM duty - Speed characteristics example

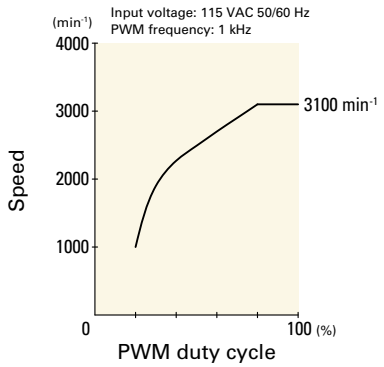

ACDC

ACDC Fan 270 mm sq.

Airflow - Static Pressure Characteristics / PWM Duty - Speed Characteristics Example

9ADB1W1TS11P0M001 With pulse sensor with PWM control

PWM duty cycle

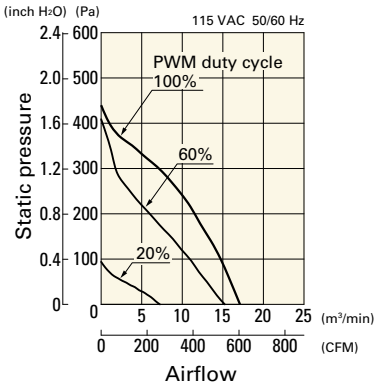

PWM duty - Speed characteristics example

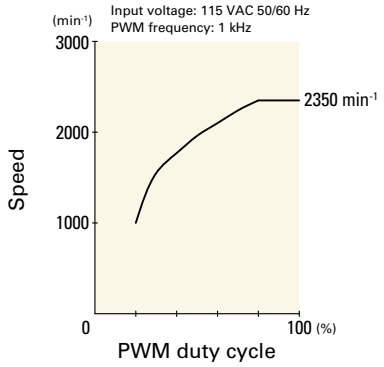

9ADB1W1TS23P0H001 With pulse sensor with PWM control

PWM duty cycle

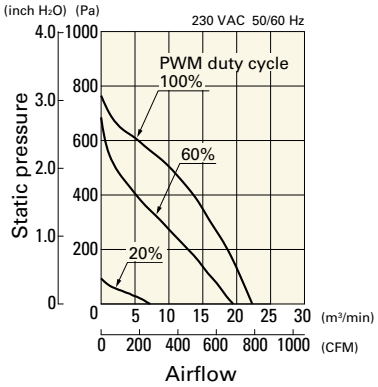

PWM duty - Speed characteristics example

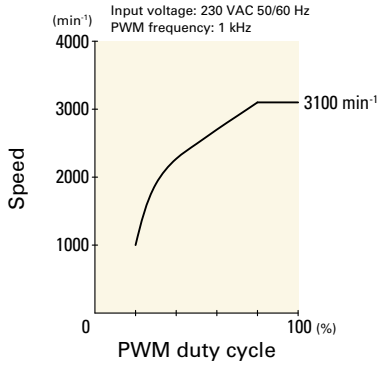

9ADB1W1TS23P0M001 With pulse sensor with PWM control

PWM duty cycle

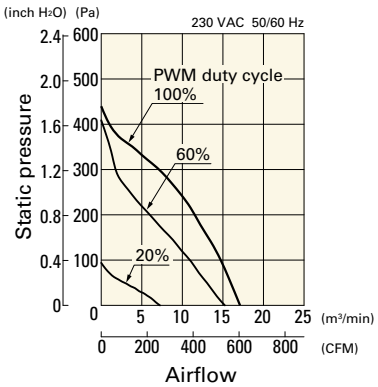

PWM duty - Speed characteristics example

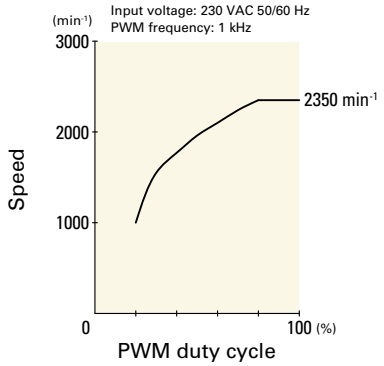

Connection Schematic

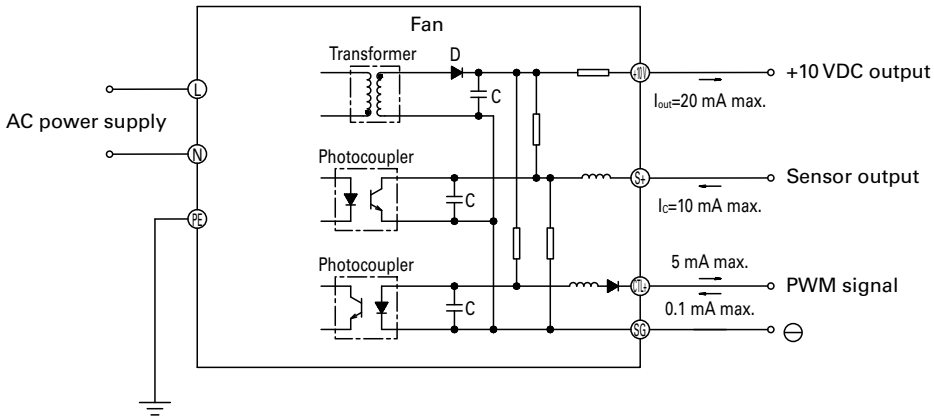

Dimensions (unit: mm)

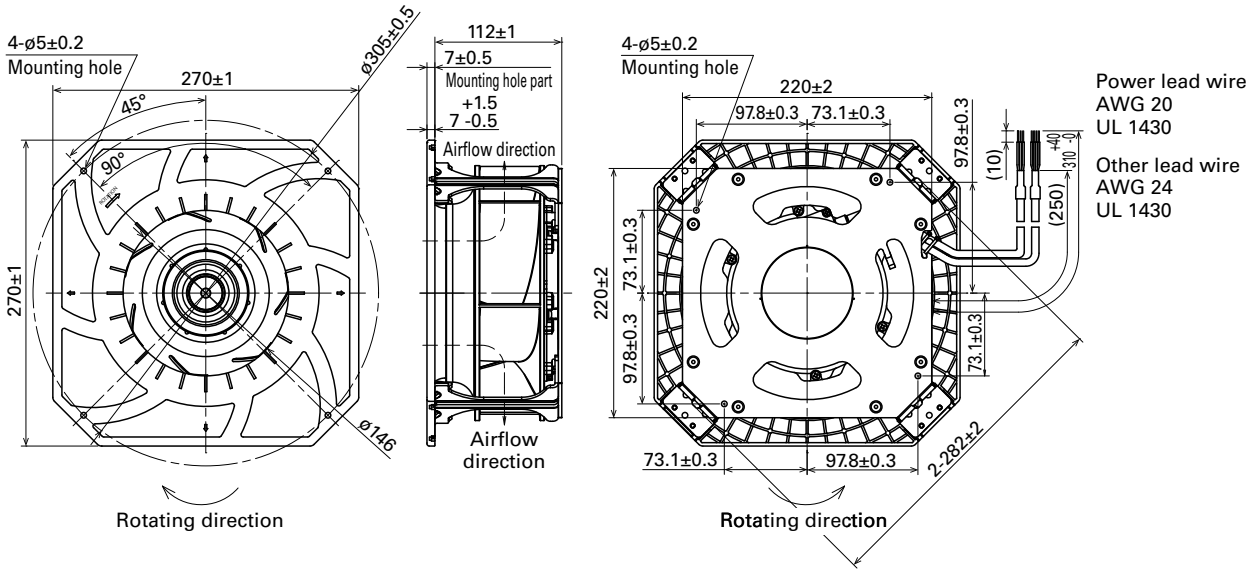

Reference Dimensions of Mounting Holes and Vent Opening (unit: mm)

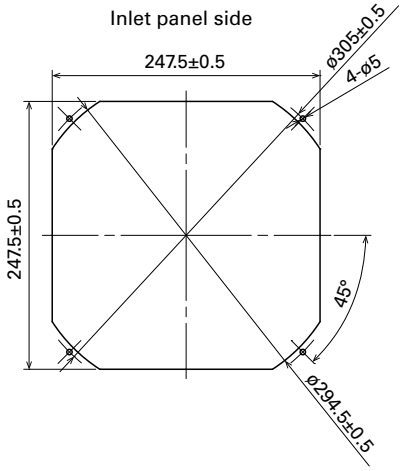

Reference Diagram for Mounting

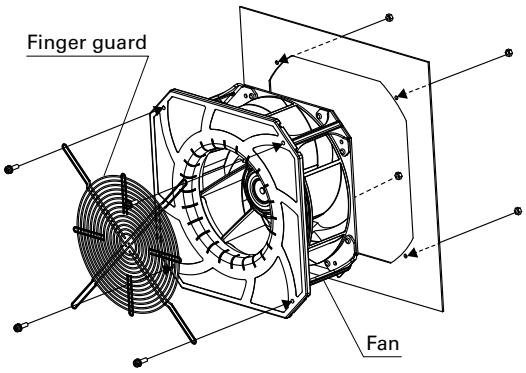

Options

Finger guards	page: p. 594

Model no.: 109-1146, 109-1146H

AC Fan

These are cooling fans that operate on AC power. The lineup is available in 100, 115, 200, and 230 V models.

How to Read Specifications (AC fan) The following is a sample. See respective product pages for detailed information.

Model no.	Rated voltage [V]	Frequency [Hz]	Input [W]	Current [A]	Locked rotor current [A]	Rated speed [min^{-1}]	Max. airflow [m^3/min]	Max. airflow [CFM]	Max. static pressure [Pa]	Max. static pressure [inchH_2O]	SPL [dB (A)]	Operating temperature [°C]	Expected life [h]
109-180	100	50/60	5/4	0.06/0.05	0.07/0.06	2250/2700	0.27/0.33	9.5/11.7	11.8/18.6	0.047/0.075	24/26	-30 to +70	25000/60°C (56000/40°C)
109-183	115				0.06/0.05								

Rated voltage ····· This is the necessary voltage to drive the fan. Single-phase 100, 115, 200 and 230 VAC are also available.
Frequency ····· This is a frequency of alternating current (AC). The frequencies of 50 Hz and 60 Hz are existing in Japan.
Performance of AC fan varies depending on the frequency. Example: Rated speed 2250/2700 = 50 Hz → 2250, 60 Hz → 2700
Input ····· The power value when the fan is operating at rated voltage (at free air).
Current ····· The current when the fan is operating at rated voltage (at free air).
Locked rotor current ····· This is a current when rotor of motor that applies rated voltage is locked.
Rated speed ····· The speed when the fan is operating at rated voltage (at free air).
Max. airflow ····· The airflow at 0 Pa static pressure when the fan is operating at rated voltage. (Measured using the double chamber method)
Max. static pressure ····· The static pressure at 0 m^3/min airflow when the fan is operating at rated voltage. (Measured using the double chamber method)
SPL ····· A-weighted sound pressure level (SPL) when the fan operates at the rated speed.
For the measurement method, see the Technical Materials section in the catalog.
Operating temperature ····· The temperature range over which fan operation is guaranteed (Non-condensing).
Expected life ····· Service life hours that 90% of bearings will survive without failing when continuously operated at the rated voltage and 60°C temperature. Expected life at 40°C is for reference only.
For more information, please refer to the technical material section.

60×60×28 mm

San Ace 60

General Specifications

- Material ..... Frame: Aluminum, Impeller: Plastic (Flammability: UL 94V-1)
- Expected life ..... See the table below. (L10 life: 90% survival rate for continuous operation in free air at 60˚C, rated voltage) Expected life at 40°C is for reference only.
- Motor structure ..... Shaded coil motor
- Motor protection function ..... Locked rotor burnout protection, Reverse polarity protection For details, please refer to p. 608.
- Dielectric strength ..... 50/60 Hz, 1500 VAC, for 1 minute (between lead wire conductors and frame)
- Insulation resistance ..... 10 MΩ min. at 500 VDC
- Sound pressure level (SPL) ..... A-weighted sound pressure level (SPL) at 1 m away from the air inlet.
- Operating voltage range ..... Voltage of each model ±10%
- Storage temperature ..... -30 to +70˚C (Non-condensing)
- Lead wire ..... Black, 2 pcs
- Mass ..... 120 g

Specifications

Model no.	Rated voltage [V]	Frequency [Hz]	Input [W]	Current [A]	Locked rotor current [A]	Rated speed [min⁻¹]	Max. airflow [m³/min]	Max. airflow [CFM]	Max. static pressure [Pa]	Max. static pressure [inchH₂O]	SPL [dB (A)]	Operating temperature [˚C]	Expected life [h]
109-180	100	50/60	5/4	0.06/0.05	0.07/0.06	2250/2700	0.27/0.33	9.5/11.7	11.8/18.6	0.047/0.075	24/26	-30 to +70	25000/60˚C (56000/40˚C)
109-183	115				0.06/0.05								

Note: These are Short Lead Time Service applicable models. Contact your point of sale for stock availability. For more information on the service, see p. 664.

Set Models

Fan, finger guard, plug cord, screws, etc. can be purchased in one package. For details, please refer to p. 665.

Order no.	Set items					
	Fan (1 pc)	Voltage	Low-speed sensor	Plug cord (1 pc)	Finger guard (1 pc)	Screws with hex nuts (4 pairs)
ST1-109-180	109-180	100 V		Plug cord is not included because of the exposed-lead structure.	109-139E	M4×40 mm
ST1-109-183	109-183	115 V			109-139E	

Airflow - Static Pressure Characteristics

109-180, 109-183

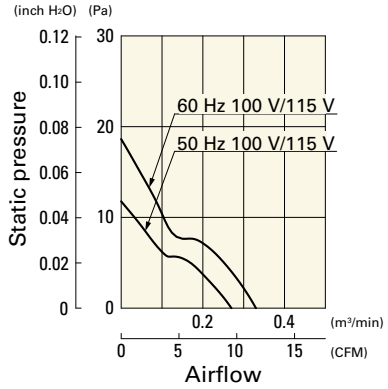

Dimensions (unit: mm)

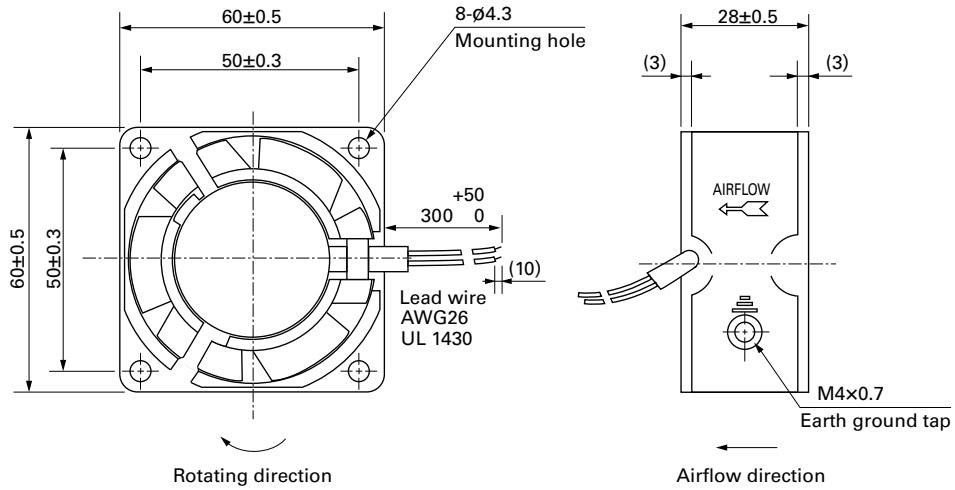

Reference Dimensions of Mounting Holes and Vent Opening (unit: mm)

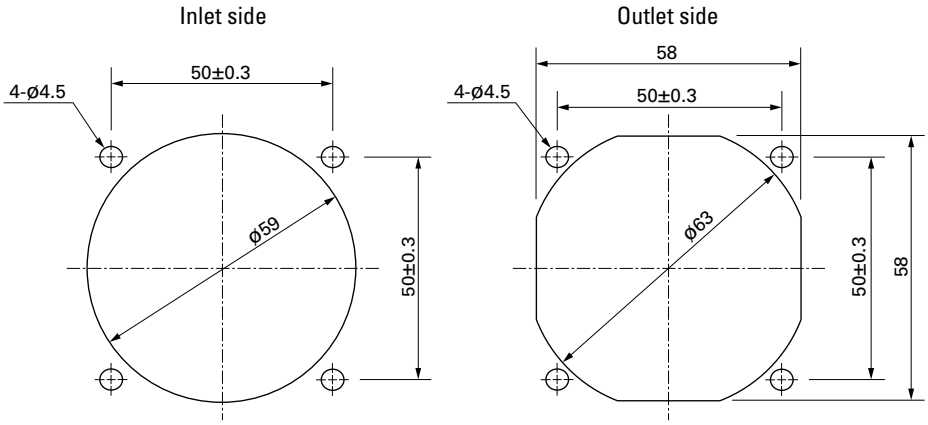

Connection Schematic

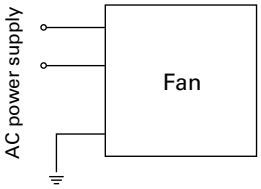

Options

Finger guards page: p. 590

Model no.: 109-139E, 109-139H

Resin finger guards page: p. 597

Model no.: 109-1003G

Resin filter kits page: p. 598

Model no.: 109-1003F13 (13PPI), 109-1003F20 (20PPI),
109-1003F30 (30PPI), 109-1003F40 (40PPI)

60×60×38 mm

San Ace 60

General Specifications

- Material ..... Frame: Aluminum, Impeller: Plastic (Flammability: UL 94V-1)
- Expected life ..... See the table below. (L10 life: 90% survival rate for continuous operation in free air at 60˚C, rated voltage) Expected life at 40°C is for reference only.
- Motor structure ..... Shaded coil motor
- Motor protection function ..... Locked rotor burnout protection, Reverse polarity protection For details, please refer to p. 608.
- Dielectric strength ..... 50/60 Hz, 1500 VAC, for 1 minute (between lead wire conductors and frame)
- Insulation resistance ..... 10 MΩ min. at 500 VDC
- Sound pressure level (SPL) ..... A-weighted sound pressure level (SPL) at 1 m away from the air inlet.
- Operating voltage range ..... Voltage of each model ±10%
- Storage temperature ..... -30 to +70˚C (Non-condensing)
- Lead wire ..... Black, 2 pcs
- Mass ..... 170 g

Specifications

Model no.	Rated voltage [V]	Frequency [Hz]	Input [W]	Current [A]	Locked rotor current [A]	Rated speed [min⁻¹]	Max. airflow [m³/min]	Max. airflow [CFM]	Max. static pressure [Pa]	Max. static pressure [inchH₂O]	SPL [dB (A)]	Operating temperature [˚C]	Expected life [h]
109-130	100	50/60	6/5	0.08/0.07	0.08/0.07	2600/3150	0.33/0.4	11.7/14.1	16.3/23.3	0.065/0.094	28/30	-30 to +60	25000/60˚C (56000/40˚C)
109-133	115			0.07/0.06	0.07/0.06								

Note: These are Short Lead Time Service applicable models. Contact your point of sale for stock availability. For more information on the service, see p. 664.

Set Models

Fan, finger guard, plug cord, screws, etc. can be purchased in one package. For details, please refer to p. 665.

Order no.	Set items					
	Fan (1 pc)	Voltage	Low-speed sensor	Plug cord (1 pc)	Finger guard (1 pc)	Screws with hex nuts (4 pairs)
ST1-109-130	109-130	100 V		Plug cord is not included because of the exposed-lead structure.	109-139E	M4×55 mm
ST1-109-133	109-133	115 V			109-139E	

Airflow - Static Pressure Characteristics

109-130, 109-133

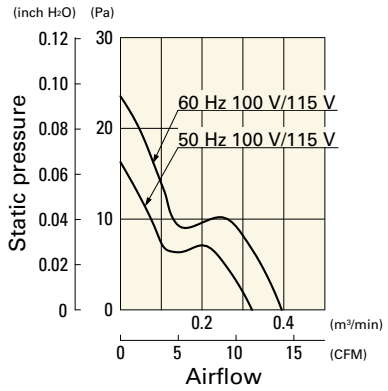

Dimensions (unit: mm)

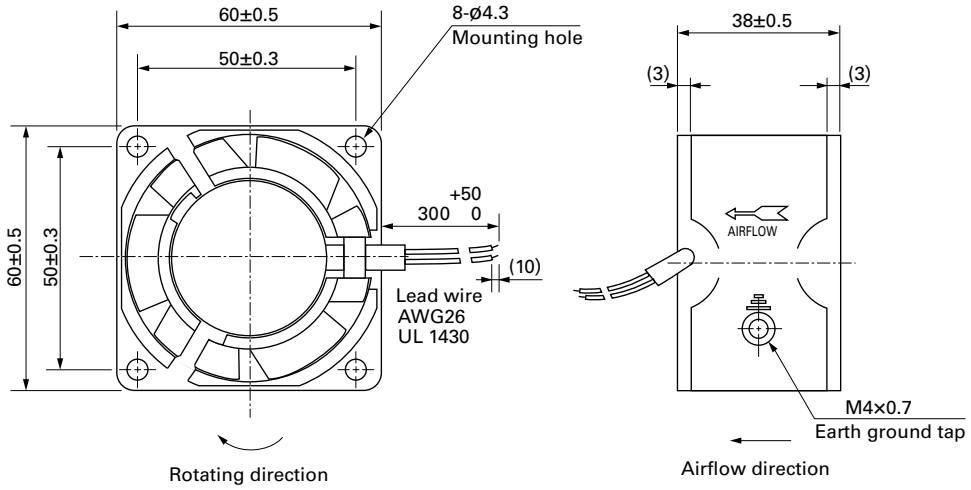

Reference Dimensions of Mounting Holes and Vent Opening (unit: mm)

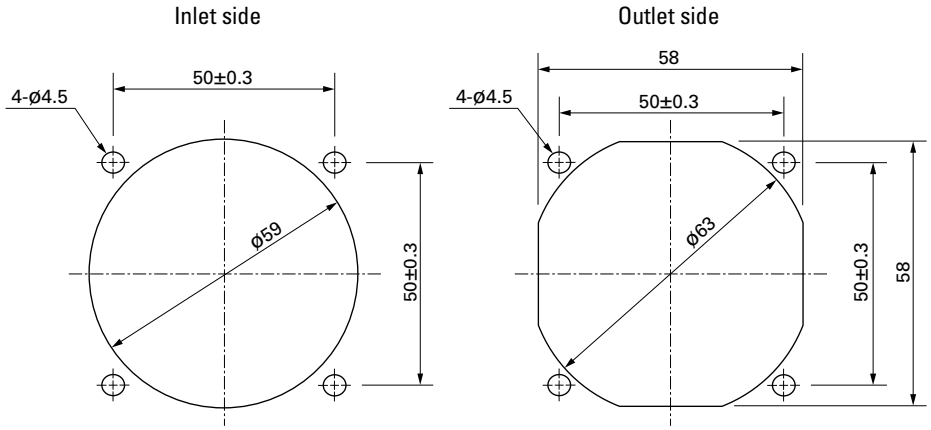

Connection Schematic

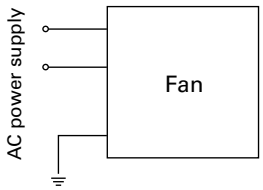

Options

Finger guards page: p. 590

Model no.: 109-139E, 109-139H

Resin filter kits page: p. 598

Model no.: 109-1003F13 (13PPI), 109-1003F20 (20PPI),
109-1003F30 (30PPI), 109-1003F40 (40PPI)

Resin finger guards page: p. 597

Model no.: 109-1003G

80×80×20 mm

San Ace 80

General Specifications

- Material ..... Frame: Aluminum, Impeller: Plastic (Flammability: UL 94V-1)
- Expected life ..... See the table below. (L10 life: 90% survival rate for continuous operation in free air at 60˚C, rated voltage) Expected life at 40°C is for reference only.
- Motor structure ..... Shaded coil motor
- Motor protection function ..... Locked rotor burnout protection, Reverse polarity protection For details, please refer to p. 608.
- Dielectric strength ..... 50/60 Hz, 1500 VAC, for 1 minute (between lead wire conductors and frame)
- Insulation resistance ..... 10 MΩ min. at 500 VDC
- Sound pressure level (SPL) ..... A-weighted sound pressure level (SPL) at 1 m away from the air inlet.
- Operating voltage range ..... Voltage of each model ±10%
- Storage temperature ..... -30 to +70˚C (Non-condensing)
- Lead wire ..... Black, 2 pcs
- Mass ..... 180 g

Specifications

Model no.	Rated voltage [V]	Frequency [Hz]	Input [W]	Current [A]	Locked rotor current [A]	Rated speed [min⁻¹]	Max. airflow [m³/min]	Max. airflow [CFM]	Max. static pressure [Pa]	Max. static pressure [inchH₂O]	SPL [dB (A)]	Operating temperature [˚C]	Expected life [h]
109-210	100	50/60	6/5	0.07/0.06	0.07/0.06	2500/3000	0.44/0.53	15.5/18.7	23.5/31.4	0.094/0.126	26/31	-30 to +60	25000/60˚C (56000/40˚C)
109-213	115			0.06/0.05	0.06/0.05								

Note: These are Short Lead Time Service applicable models. Contact your point of sale for stock availability. For more information on the service, see p. 664.

Set Models

Fan, finger guard, plug cord, screws, etc. can be purchased in one package. For details, please refer to p. 665.

Order no.	Set items					
	Fan (1 pc)	Voltage	Low-speed sensor	Plug cord (1 pc)	Finger guard (1 pc)	Screws with hex nuts (4 pairs)
ST1-109-210	109-210	100 V		Plug cord is not included because of the exposed-lead structure.	109-049E	M4×40 mm
ST1-109-213	109-213	115 V			109-049E	

Airflow - Static Pressure Characteristics

109-210, 109-213

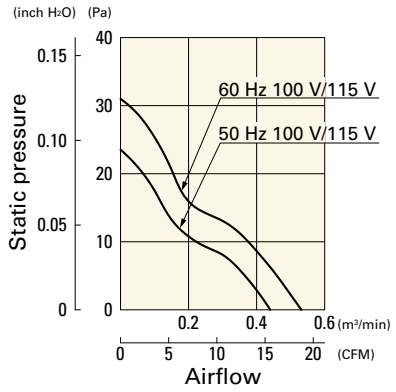

Dimensions (unit: mm)

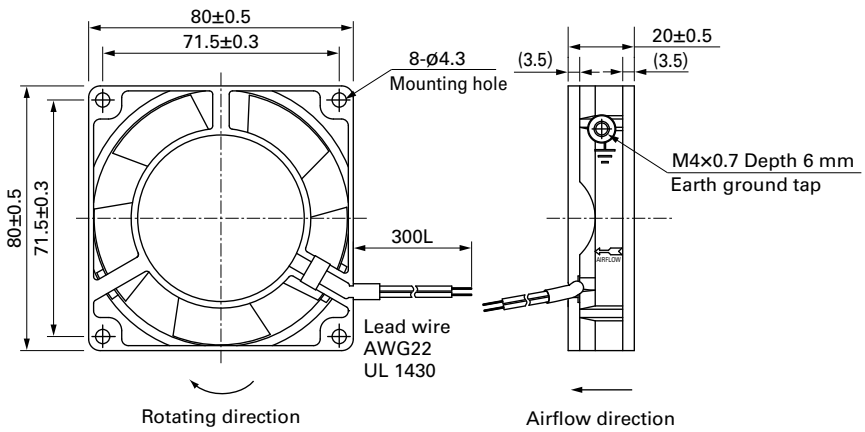

Reference Dimensions of Mounting Holes and Vent Opening (unit: mm)

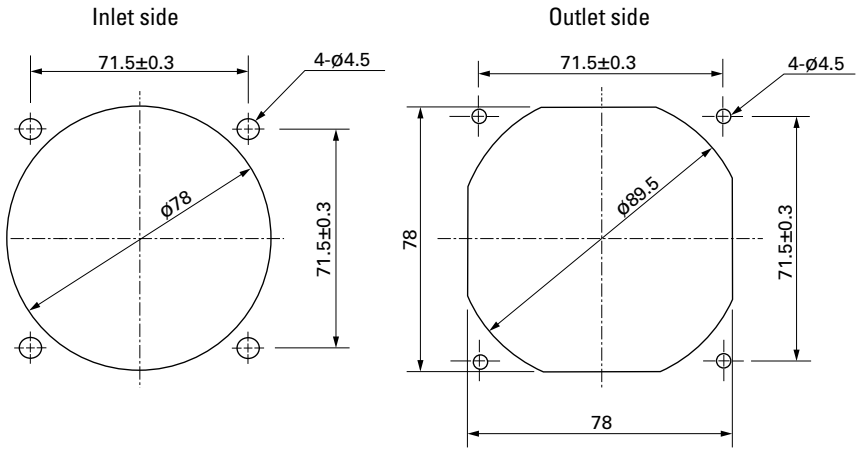

Connection Schematic

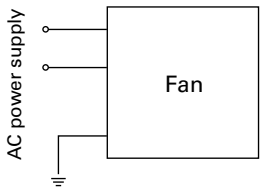

Options

Finger guards page: p. 590

Model no.: 109-049E, 109-049H

Resin finger guards page: p. 597

Model no.: 109-1002G

Resin filter kits page: p. 598

Model no.: 109-1002F13 (13PPI), 109-1002F20 (20PPI),
109-1002F30 (30PPI), 109-1002F40 (40PPI)

80×80×25 mm

San Ace 80

General Specifications

- Material ..... Frame: Aluminum, Impeller: Plastic (Flammability: UL 94V-1)
- Expected life ..... See the table below. (L10 life: 90% survival rate for continuous operation in free air at 60˚C, rated voltage) Expected life at 40°C is for reference only.
- Motor structure ..... Shaded coil motor
- Motor protection function ..... Locked rotor burnout protection, Reverse polarity protection For details, please refer to p. 608.
- Dielectric strength ..... 50/60 Hz, 1500 VAC, for 1 minute (between input terminal and frame)
- Insulation resistance ..... 10 MΩ min. at 500 VDC
- Sound pressure level (SPL) ..... A-weighted sound pressure level (SPL) at 1 m away from the air inlet.
- Operating voltage range ..... Voltage of each model ±10%
- Storage temperature ..... -30 to +70˚C (Non-condensing)
- Mass ..... 270 g

Specifications

Model no.	Rated voltage [V]	Frequency [Hz]	Input [W]	Current [A]	Locked rotor current [A]	Rated speed [min⁻¹]	Max. airflow [m³/min]	Max. airflow [CFM]	Max. static pressure [Pa]	Max. static pressure [inchH₂O]	SPL [dB (A)]	Operating temperature [˚C]	Expected life [h]
109S050	100	50/60	9/7	0.12/0.1	0.13/0.11	2650/3100	0.63/0.76	22.3/26.9	27.5/38.3	0.11 /0.154	30/33	-30 to +60	25000/60˚C (56000/40˚C)
109S053	115			0.1 /0.08	0.11/0.09								
109S051	200			0.06/0.05	0.06/0.05								
109S054	230			0.05/0.04	0.05/0.04								
109S030	100			0.12/0.1	0.13/0.11	2350/2700	0.55/0.63	19.4/22.3	21.6/28.4	0.087/0.114	28/30		
109S033	115			0.1 /0.08	0.11/0.09								
109S031	200			0.06/0.05	0.06/0.05								
109S034	230			0.05/0.04	0.05/0.04								

Note: These are Short Lead Time Service applicable models. Contact your point of sale for stock availability. For more information on the service, see p. 664.

Set Models PSE (Japanese safety standard) compatible

A set of a fan, finger guard, plug cord (PSE compatible), and screws. For details, please refer to p. 665.

Order no.	Set items					
	Fan (1 pc)	Voltage	Low-speed sensor	Plug cord (1 pc)	Finger guard (1 pc)	Screws with hex nuts (4 pairs)(2)
ST1-109S050	109S050	100 V		489-016-L10(1)	109-049E	M4×40 mm
ST1-109S053	109S053	115 V		489-016-L10(1)	109-049E	
ST1-109S051	109S051	200 V		489-016-L10(1)	109-049E	
ST1-109S054	109S054	230 V		489-016-L10(1)	109-049E	
ST1-109S030	109S030	100 V		489-016-L10(1)	109-049E	
ST1-109S033	109S033	115 V		489-016-L10(1)	109-049E	
ST1-109S031	109S031	200 V		489-016-L10(1)	109-049E	
ST1-109S034	109S034	230 V		489-016-L10(1)	109-049E	

(1) PSE compatible, but not UL compatible.

(2) Though these are 2-hole or 3-hole frame mount types, 4 screws are included for extra.

Airflow - Static Pressure Characteristics

109S050, 109S053, 109S051, 109S054

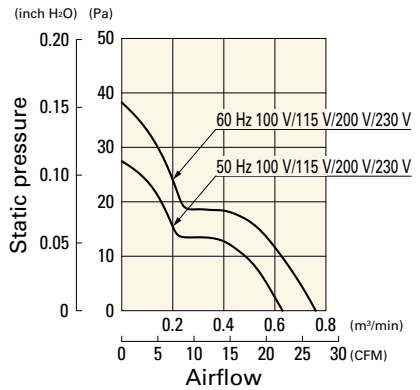

109S030, 109S033, 109S031, 109S034

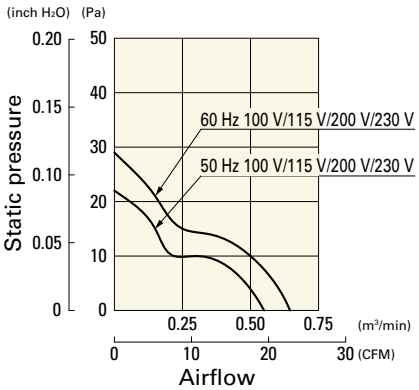

Dimensions (unit: mm)

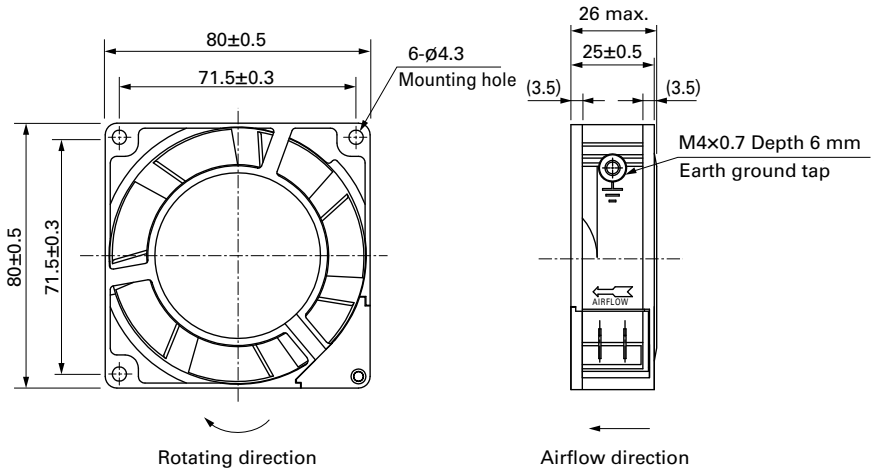

Reference Dimensions of Mounting Holes and Vent Opening (unit: mm)

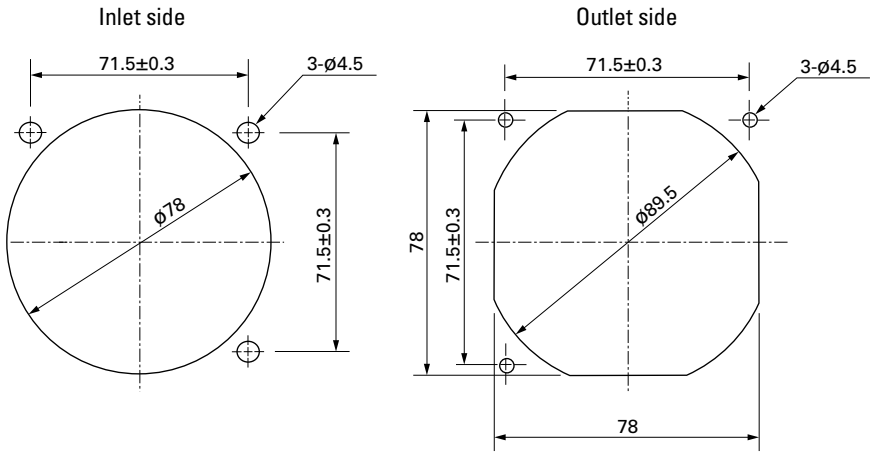

Connection Schematic

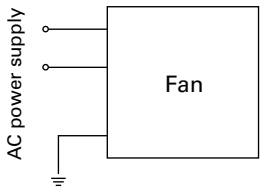

Options

Finger guards page: p. 590

Model no.: 109-049E, 109-049H

Resin filter kits page: p. 598

Model no.: 109-1002F13 (13PPI), 109-1002F20 (20PPI),
109-1002F30 (30PPI), 109-1002F40 (40PPI)

Resin finger guards page: p. 597

Model no.: 109-1002G

Plug cord page: pp. 601 to 602

PSE compatible models
Model no.: 489-016-L10, 489-016-L21

UL/CSA certified models
Model no.: 489-047-L10, 489-047-L21

80×80×38 mm

San Ace 80

General Specifications

- Material ..... Frame: Aluminum, Impeller: Plastic (Flammability: UL 94V-1)
- Expected life ..... See the table below. (L10 life: 90% survival rate for continuous operation in free air at 60˚C, rated voltage) Expected life at 40°C is for reference only.
- Motor structure ..... Shaded coil motor
- Motor protection function ..... Locked rotor burnout protection, Reverse polarity protection For details, please refer to p. 608.
- Dielectric strength ..... 50/60 Hz, 1500 VAC, for 1 minute (between input terminal and frame)
- Insulation resistance ..... 10 MΩ min. at 500 VDC
- Sound pressure level (SPL) ..... A-weighted sound pressure level (SPL) at 1 m away from the air inlet.
- Operating voltage range ..... Voltage of each model ±10%
- Storage temperature ..... -30 to +70˚C (Non-condensing)
- Mass ..... 400 g

Specifications

Model no.	Rated voltage [V]	Frequency [Hz]	Input [W]	Current [A]	Locked rotor current [A]	Rated speed [min⁻¹]	Max. airflow [m³/min]	Max. airflow [CFM]	Max. static pressure [Pa]	Max. static pressure [inchH₂O]	SPL [dB (A)]	Operating temperature [˚C]	Expected life [h]
109-150	100	50/60	9/8	0.13/0.11	0.17/0.15	2700/3150	0.9/1.05	31.8/37.1	31.4/44.1	0.126/0.177	35/39	-30 to +60	25000/60˚C (56000/40˚C)
109-153	115			0.11/0.1	0.14/0.12								
109-151	200			0.07/0.06	0.09/0.08								
109-154	230			0.06/0.05	0.08/0.07								

Note: These are Short Lead Time Service applicable models. Contact your point of sale for stock availability. For more information on the service, see p. 664.

Set Models PSE (Japanese safety standard) compatible

A set of a fan, finger guard, plug cord (PSE compatible), and screws. For details, please refer to p. 665.

Order no.	Set items					
	Fan (1 pc)	Voltage	Low-speed sensor	Plug cord (1 pc)	Finger guard (1 pc)	Screws with hex nuts (4 pairs)(2)
ST1-109-150	109-150	100 V		489-016-L10(1)	109-049E	M4×55 mm
ST1-109-153	109-153	115 V		489-016-L10(1)	109-049E	
ST1-109-151	109-151	200 V		489-016-L10(1)	109-049E	
ST1-109-154	109-154	230 V		489-016-L10(1)	109-049E	

(1) PSE compatible, but not UL compatible.
(2) Though these are 2-hole or 3-hole frame mount types, 4 screws are included for extra.

Airflow - Static Pressure Characteristics

109-150, 109-153, 109-151, 109-154

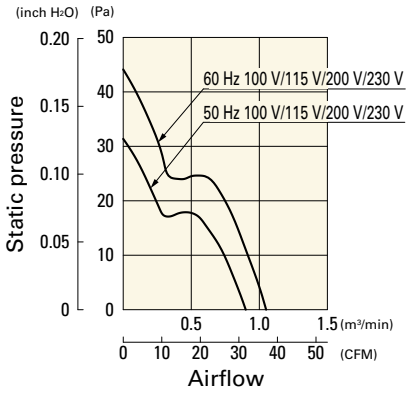

Dimensions (unit: mm)

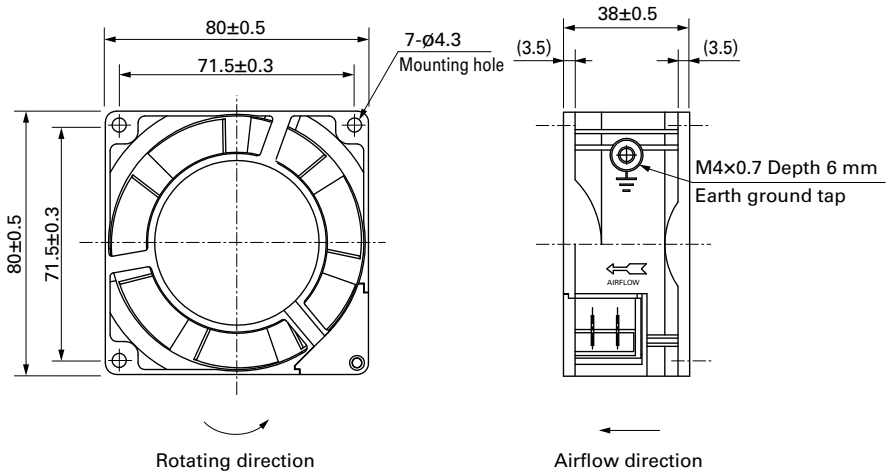

Reference Dimensions of Mounting Holes and Vent Opening (unit: mm)

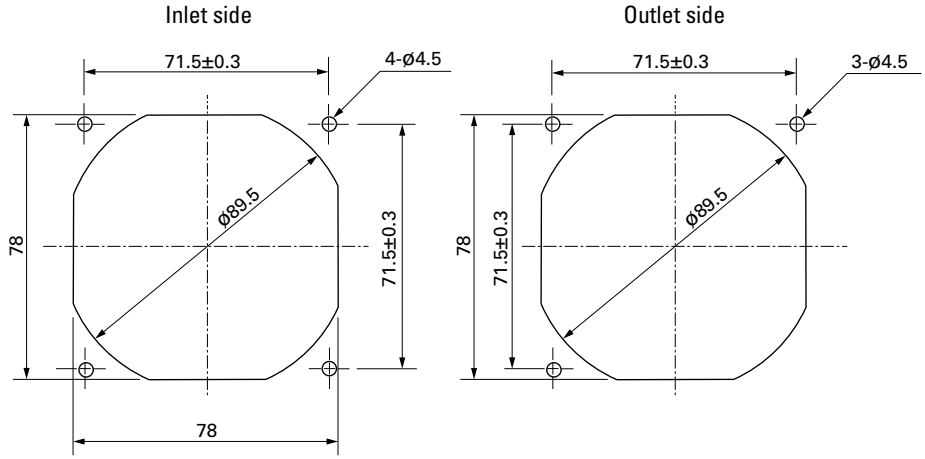

Connection Schematic

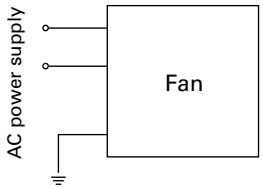

Options

Finger guards page: p. 590

Model no.: 109-049E, 109-049H

Resin filter kits page: p. 598

Model no.: 109-1002F13 (13PPI), 109-1002F20 (20PPI),
109-1002F30 (30PPI), 109-1002F40 (40PPI)

Resin finger guards page: p. 597

Model no.: 109-1002G

Plug cord page: pp. 601 to 602

PSE compatible models
Model no.: 489-016-L10, 489-016-L21

UL/CSA certified models
Model no.: 489-047-L10, 489-047-L21

80×80×42 mm

San Ace 80

General Specifications

- Material ..... Frame: Aluminum (Black coating), Impeller: Plastic (Flammability: UL 94V-1)
- Expected life ..... See the table below. (L10 life: 90% survival rate for continuous operation in free air at 60°C, rated voltage) Expected life at 40°C is for reference only.
- Motor structure ..... Shaded coil motor
- Motor protection function ..... Locked rotor burnout protection, Reverse polarity protection For details, please refer to p. 608.
- Dielectric strength ..... 50/60 Hz, 1500 VAC, for 1 minute (between input terminal and frame)
- Insulation resistance ..... 10 MΩ min. at 500 VDC
- Sound pressure level (SPL) ..... A-weighted sound pressure level (SPL) at 1 m away from the air inlet.
- Operating voltage range ..... Voltage of each model ±10%
- Storage temperature ..... -30 to +70°C (Non-condensing)
- Mass ..... 410 g

Specifications

Model no.	Rated voltage [V]	Frequency [Hz]	Input [W]	Current [A]	Locked rotor current [A]	Rated speed [min⁻¹]	Max. airflow [m³/min]	Max. airflow [CFM]	Max. static pressure [Pa]	Max. static pressure [inchH₂O]	SPL [dB (A)]	Operating temperature [°C]	Expected life [h]
109-040UL	100	50/60	10/9	0.13/0.11	0.16/0.14	2650/3100	0.85/1.0	30.0/35.3	24.5/35.3	0.098/0.142	40/44	-30 to +60	25000/60°C (56000/40°C)
109-043UL	115			0.11/0.1	0.14/0.12								
109-041UL	200			0.07/0.06	0.08/0.07								
109-044UL	230			0.06/0.05	0.07/0.06								
109-047UL*	100		4/3.5	0.05/0.05	0.05/0.05	1500/1500	0.43/0.43	15.2/15.2	8.8/ 8.8	0.035/0.035	24/24		
109-033UL*	115			0.04/0.04	0.04/0.04								

*These are low-speed models.

Note: These are Short Lead Time Service applicable models. Contact your point of sale for stock availability. For more information on the service, see p. 664.

Set Models PSE (Japanese safety standard) compatible

A set of a fan, finger guard, plug cord (PSE compatible), and screws. For details, please refer to p. 665.

Order no.	Set items					
	Fan (1 pc)	Voltage	Low-speed sensor	Plug cord (1 pc)	Finger guard (1 pc)	Screws with hex nuts (4 pairs)
ST1-109-040UL	109-040UL	100 V		489-008-L10*	109-049E	M4×55 mm
ST1-109-043UL	109-043UL	115 V		489-008-L10*	109-049E	
ST1-109-041UL	109-041UL	200 V		489-008-L10*	109-049E	
ST1-109-044UL	109-044UL	230 V		489-008-L10*	109-049E	
ST1-109-047UL	109-047UL	100 V		489-008-L10*	109-049E	
ST1-109-033UL	109-033UL	115 V		489-008-L10*	109-049E	

* PSE compatible, but not UL compatible.

Airflow - Static Pressure Characteristics

109-040UL, 109-043UL, 109-041UL, 109-044UL

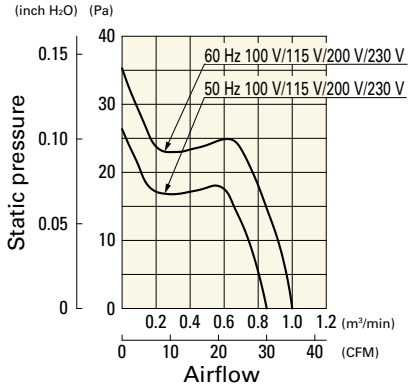

109-047UL, 109-033UL

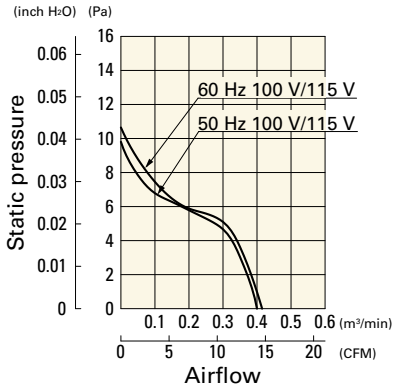

Dimensions (unit: mm)

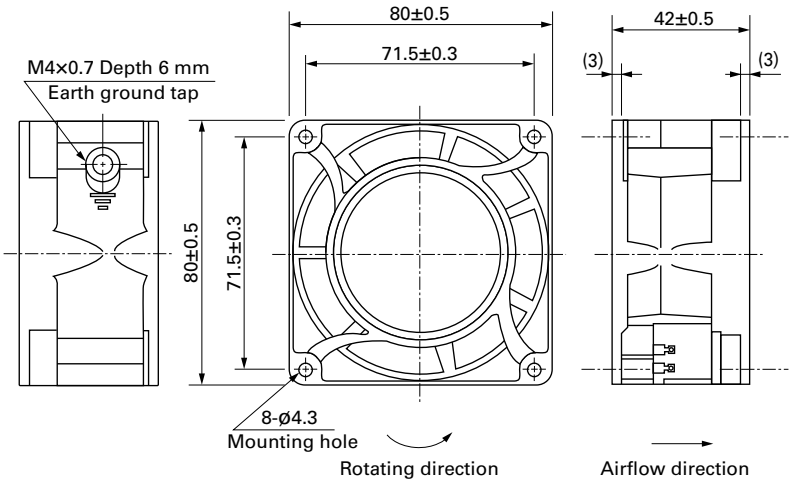

Reference Dimensions of Mounting Holes and Vent Opening (unit: mm)

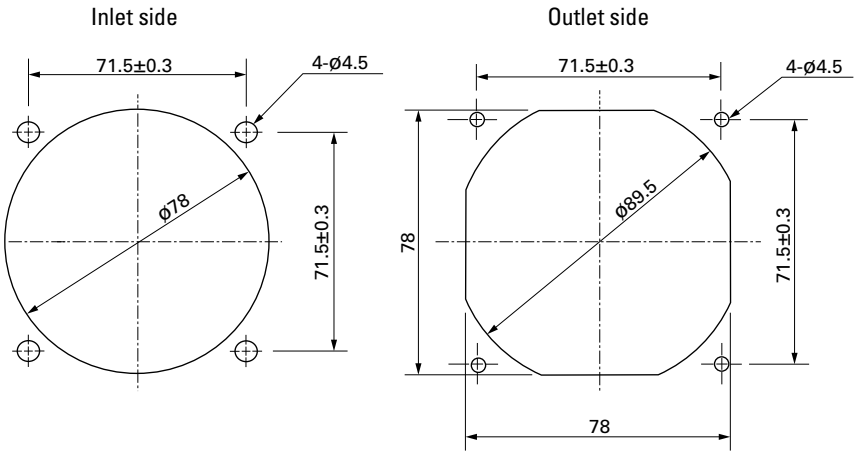

Connection Schematic

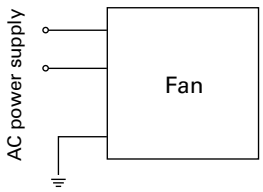

Options

Finger guards page: p. 590

Model no.: 109-049E, 109-049H

Resin finger guards page: p. 597

Model no.: 109-1002G

Resin filter kits page: p. 598

Model no.: 109-1002F13 (13PPI), 109-1002F20 (20PPI),
109-1002F30 (30PPI), 109-1002F40 (40PPI)

Plug cord page: pp. 601 to 602

PSE compatible models
Model no.: 489-008-L10, 489-008-L21, 489-008-L35

92×92×25 mm

San Ace 92

Only standard fans (without sensors) have acquired CSA certification.

General Specifications

- Material ..... Frame: Aluminum, Impeller: Plastic (Flammability: UL 94V-1)
- Expected life ..... See the table below. (L10 life: 90% survival rate for continuous operation in free air at 60˚C, rated voltage) Expected life at 40°C is for reference only.
- Motor structure ..... Shaded coil motor
- Motor protection function ..... Locked rotor burnout protection, Reverse polarity protection For details, please refer to p. 608.
- Dielectric strength ..... 50/60 Hz, 1500 VAC, for 1 minute (between input terminal and frame)
- Dielectric strength (with sensor) ..... 50/60 Hz 1500 VAC 1 minute (between AC input terminal and frame) 50/60 Hz 1000 VAC 1 minute (between lead wire conductors and frame)
- Insulation resistance ..... 10 MΩ min. at 500 VDC
- Sound pressure level (SPL) ..... A-weighted sound pressure level (SPL) at 1 m away from the air inlet.
- Operating voltage range ..... Voltage of each model ±10%
- Storage temperature ..... -30 to +70˚C (Non-condensing)
- Sensor-Purpose lead wire ..... ⊕Brown ⊖Black (Sensor) Yellow
- Mass ..... 290 g/310 g (with Sensor)

Specifications

Standard

Model no.	Rated voltage [V]	Frequency [Hz]	Input [W]	Current [A]	Locked rotor current [A]	Rated speed [min⁻¹]	Max. airflow [m³/min]	Max. airflow [CFM]	Max. static pressure [Pa]	Max. static pressure [inchH₂O]	SPL [dB (A)]	Operating temperature [˚C]	Expected life [h]
109S091	100	50/60	8/7	0.1 /0.09	0.13/0.12	2700/3100	0.95/1.1	33.6/38.9	39.2/49.0	0.157/0.197	35/38	-30 to +60	25000/60˚C (56000/40˚C)
109S093	115			0.09/0.08	0.11/0.1								
109S092	200		11/10	0.07/0.06	0.08/0.08								
109S094	230		10/9	0.06/0.05	0.07/0.07								
109S095	100		8/7	0.1 /0.09	0.11/0.1	2400/2800	0.84/0.98	29.7/34.6	31.4/40.2	0.126/0.161	32/35		
109S096*	100		7/6	0.09/0.08	0.09/0.08	1500/1700	0.55/0.65	19.4/23	12.5/16.3	0.05 /0.065	24/27		
109S193*	115			0.08/0.07	0.08/0.07								
109S192*	200		8/7	0.06/0.05	0.06/0.05								
109S194*	230			0.05/0.04	0.05/0.04								

*These are low-speed models.

with Sensor

For sensor specifications, please refer to p. 614. Sensor specification differs depending on the fan's speed specification.
For a 5 V sensor power supply (ITEM-20), please append "-20" to the end of model number. E.g. 109S491-20
For a 12 V sensor power supply (ITEM-30), please append "-30" to the end of model number. E.g. 109S491-30

Model no.	Rated voltage [V]	Frequency [Hz]	Input [W]	Current [A]	Locked rotor current [A]	Rated speed [min⁻¹]	Max. airflow [m³/min]	Max. airflow [CFM]	Max. static pressure [Pa]	Max. static pressure [inchH₂O]	SPL [dB (A)]	Operating temperature [˚C]	Expected life [h]
109S491	100	50/60	8/7	0.1 /0.09	0.13/0.12	2700/3100	0.95/1.1	33.6/38.9	39.2/49.0	0.157/0.197	35/38	-10 to +60	25000/60˚C (56000/40˚C)
109S493	115			0.09/0.08	0.11/0.1								
109S492	200		11/10	0.07/0.06	0.08/0.08								
109S494	230		10/9	0.06/0.05	0.07/0.07								
109S495	100		8/7	0.1 /0.09	0.11/0.1	2400/2800	0.84/0.98	29.7/34.6	31.4/40.2	0.126/0.161	32/35		
109S496*			7/6	0.09/0.08	0.09/0.08	1500/1700	0.55/0.65	19.4/23	12.5/16.3	0.05 /0.065	24/27		

*These are low-speed models.

Note: These are Short Lead Time Service applicable models. Contact your point of sale for stock availability. For more information on the service, see p. 664.

For the San Ace 92AD 9AD type 92×92×38 mm fan, please refer to p. 490.

This fan works while internally converting AC power into DC power, providing the superior performance of a DC fan with the flexibility of AC input.

Set Models PSE (Japanese safety standard) compatible

A set of a fan, finger guard, plug cord (PSE compatible), and screws. For details, please refer to p. 665.

Order no.	Set items					
	Fan (1 pc)	Voltage	Low-speed sensor	Plug cord (1 pc)	Finger guard (1 pc)	Screws with hex nuts (4 pairs)[2]
ST1-109S091	109S091	100 V		489-016-L10[1]	109-099E	M3×40 mm
ST1-109S093	109S093	115 V		489-016-L10[1]	109-099E	
ST1-109S092	109S092	200 V		489-016-L10[1]	109-099E	
ST1-109S094	109S094	230 V		489-016-L10[1]	109-099E	
ST1-109S095	109S095	100 V		489-016-L10[1]	109-099E	
ST1-109S096	109S096	100 V		489-016-L10[1]	109-099E	
ST1-109S193	109S193	115 V		489-016-L10[1]	109-099E	
ST1-109S192	109S192	200 V		489-016-L10[1]	109-099E	
ST1-109S194	109S194	230 V		489-016-L10[1]	109-099E	
ST1-109S491-20	109S491-20	100 V	◯ (5 V)	489-016-L10[1]	109-099E	
ST1-109S491-30	109S491-30		◯ (12 V)	489-016-L10[1]	109-099E	
ST1-109S493-20	109S493-20	115 V	◯ (5 V)	489-016-L10[1]	109-099E	
ST1-109S493-30	109S493-30		◯ (12 V)	489-016-L10[1]	109-099E	
ST1-109S492-20	109S492-20	200 V	◯ (5 V)	489-016-L10[1]	109-099E	
ST1-109S492-30	109S492-30		◯ (12 V)	489-016-L10[1]	109-099E	
ST1-109S494-20	109S494-20	230 V	◯ (5 V)	489-016-L10[1]	109-099E	
ST1-109S494-30	109S494-30		◯ (12 V)	489-016-L10[1]	109-099E	
ST1-109S495-20	109S495-20	100 V	◯ (5 V)	489-016-L10[1]	109-099E	
ST1-109S495-30	109S495-30		◯ (12 V)	489-016-L10[1]	109-099E	
ST1-109S496-20	109S496-20		◯ (5 V)	489-016-L10[1]	109-099E	
ST1-109S496-30	109S496-30		◯ (12 V)	489-016-L10[1]	109-099E	

(1) PSE compatible, but not UL compatible.

(2) Though these are 2-hole or 3-hole frame mount types, 4 screws are included for extra.

Airflow - Static Pressure Characteristics

Standard

109S091, 109S093, 109S092, 109S094

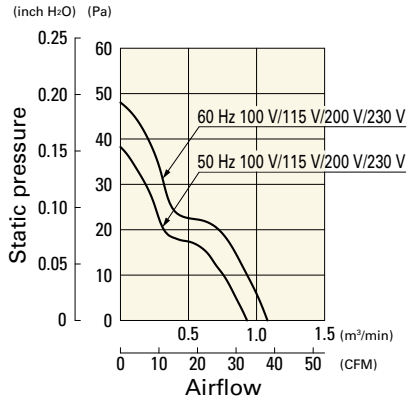

109S095

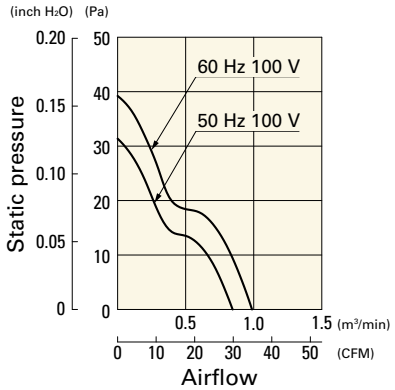

109S096, 109S193, 109S192, 109S194

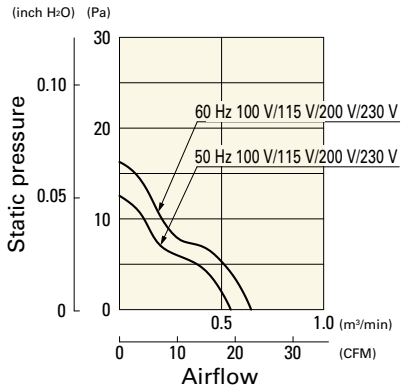

with Sensor

109S491, 109S493, 109S492, 109S494

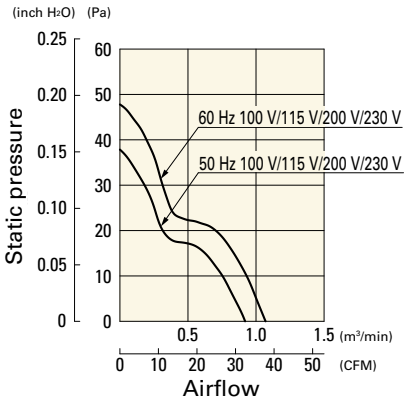

109S495

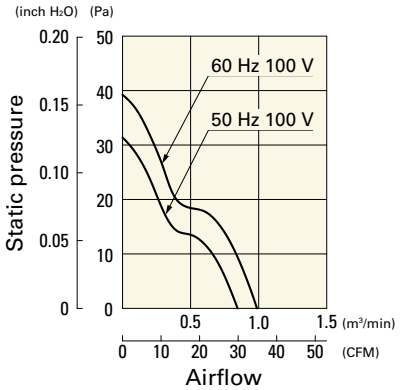

109S496

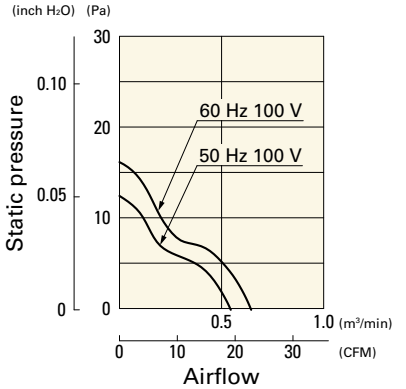

Dimensions (unit: mm)

Standard

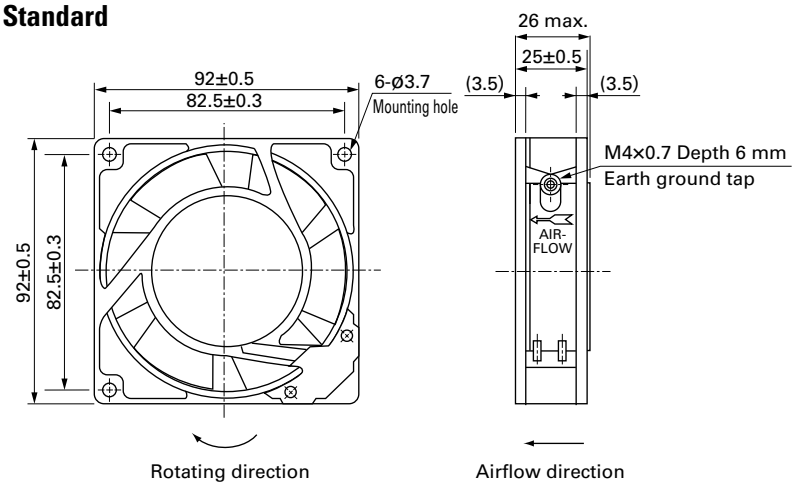

with Sensor

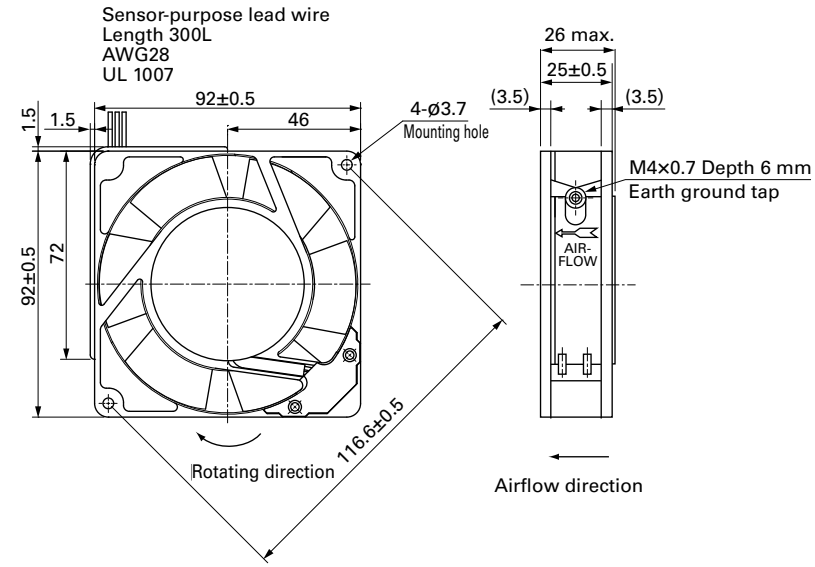

Reference Dimensions of Mounting Holes and Vent Opening (unit: mm)

Standard

Inlet side, Outlet side

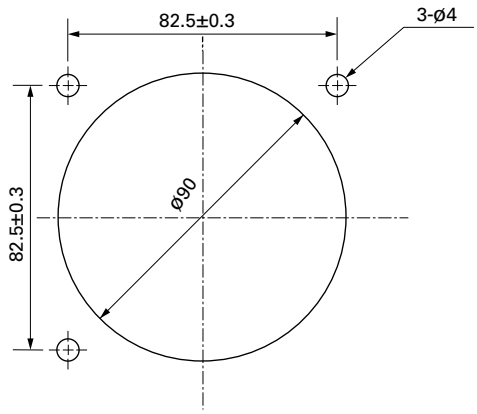

with Sensor

Inlet side, Outlet side

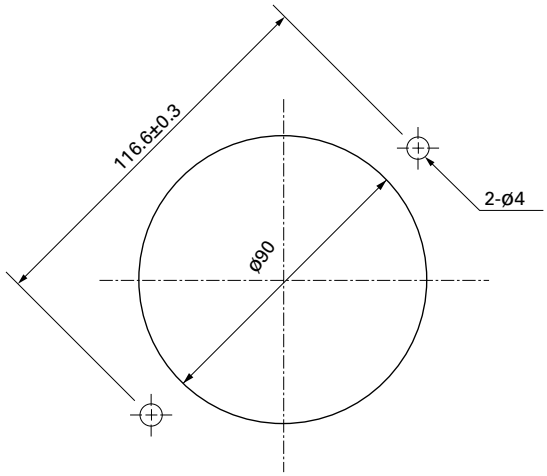

Connection Schematic

Standard

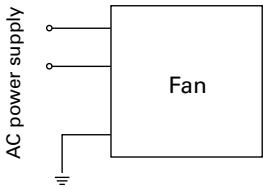

with Sensor

For fan power supply

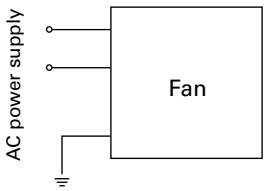

For sensor circuit
5 V (ITEM-20)

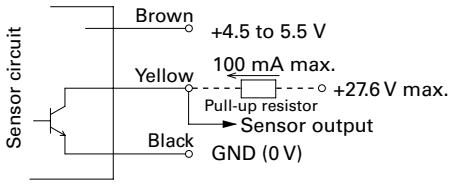

12 V (ITEM-30)

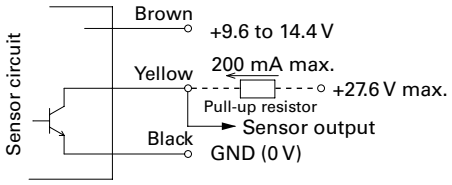

GND (Black) should be shared in case that power supply for sensor circuit (Brown) and that for sensor pull-up (Yellow) are separated.

Options

Finger guards
page: p. 591

Model no.: 109-099E, 109-099H

Resin filter kits
page: p. 598

Model no.: 109-1001F13 (13PPI), 109-1001F20 (20PPI),
109-1001F30 (30PPI), 109-1001F40 (40PPI)

Resin finger guards
page: p. 597

Model no.: 109-1001G

Plug cord
page: pp. 601 to 602

PSE compatible models
Model no.: 489-016-L10, 489-016-L21

UL/CSA certified models
Model no.: 489-047-L10, 489-047-L21

120×120×25 mm

San Ace 120

Only standard fans (without sensors) have acquired CSA certification.

General Specifications

- Material ..... Frame: Aluminum, Impeller: Plastic (Flammability: UL 94V-1)
- Expected life ..... See the table below. (L10 life: 90% survival rate for continuous operation in free air at 60˚C, rated voltage) Expected life at 40°C is for reference only.
- Motor structure ..... Shaded coil motor
- Motor protection function ..... Locked rotor burnout protection, Reverse polarity protection For details, please refer to p. 608.
- Dielectric strength ..... 50/60 Hz, 1500 VAC, for 1 minute (between input terminal and frame)
- Dielectric strength (with sensor) ..... 50/60 Hz 1500 VAC 1 minute (between AC input terminal and frame) 50/60 Hz 1000 VAC 1 minute (between lead wire conductors and frame)
- Insulation resistance ..... 10 MΩ min. at 500 VDC
- Sound pressure level (SPL) ..... A-weighted sound pressure level (SPL) at 1 m away from the air inlet.
- Operating voltage range ..... Voltage of each model ±10%
- Storage temperature ..... -30 to +70˚C (Non-condensing)
- Sensor-Purpose lead wire ..... ⊕Brown ⊖Black (Sensor) Yellow
- Mass ..... 370 g/390 g (with Sensor)

Specifications

Standard

Model no.	Rated voltage [V]	Frequency [Hz]	Input [W]	Current [A]	Locked rotor current [A]	Rated speed [min⁻¹]	Max. airflow [m³/min]	Max. airflow [CFM]	Max. static pressure [Pa]	Max. static pressure [inchH₂O]	SPL [dB (A)]	Operating temperature [˚C]	Expected life [h]
109S085	100	50/60	13.5/12	0.16/0.14	0.19/0.17	2500/2900	1.95/2.3	68.9/81.3	48 /51.9	0.193/0.216	38/41	-30 to +60	25000/60˚C (56000/40˚C)
109S084	115			0.14/0.12	0.16/0.15								
109S088	200			0.08/0.07	0.1 /0.09								
109S087	230			0.07/0.06	0.08/0.07								
109S081	100		9.5/8.5	0.11	0.11/0.1	2200/2350	1.7 /1.8	60.1/63.6	29.4/26.5	0.118/0.106	34/35		
109S083	115			0.1	0.1 /0.09								
109S082	200			0.07	0.07/0.06								
109S089	230			0.06	0.06/0.05								
109S086*	100		12/10	0.14/0.12	0.15/0.13	1400/1600	1.1 /1.25	38.9/44.2	14.7/18.6	0.059/0.075	24/27		

*These are low-speed models.

with Sensor

For sensor specifications, please refer to p. 614. Sensor specification differs depending on the fan's speed specification.
For a 5 V sensor power supply (ITEM-20), please append "-20" to the end of model number. E.g. 109S485-20
For a 12 V sensor power supply (ITEM-30), please append "-30" to the end of model number. E.g. 109S485-30

Model no.	Rated voltage [V]	Frequency [Hz]	Input [W]	Current [A]	Locked rotor current [A]	Rated speed [min⁻¹]	Max. airflow [m³/min]	Max. airflow [CFM]	Max. static pressure [Pa]	Max. static pressure [inchH₂O]	SPL [dB (A)]	Operating temperature [˚C]	Expected life [h]
109S485	100	50/60	13.5/12	0.16/0.14	0.19/0.17	2500/2900	1.95/2.3	68.9/81.3	48 /51.9	0.193/0.216	38/41	-10 to +60	25000/60˚C (56000/40˚C)
109S484	115			0.14/0.12	0.16/0.15								
109S488	200			0.08/0.07	0.1 /0.09								
109S487	230			0.07/0.06	0.08/0.07								
109S486*	100		12/10	0.14/0.12	0.15/0.13	1400/1600	1.1 /1.25	38.9/44.2	14.7/18.6	0.059/0.075	24/27		

*These are low-speed models.

Note: These are Short Lead Time Service applicable models. Contact your point of sale for stock availability. For more information on the service, see p. 664.

Set Models PSE (Japanese safety standard) compatible

A set of a fan, finger guard, plug cord (PSE compatible), and screws. For details, please refer to p. 665.

Order no.	Set items					
	Fan (1 pc)	Voltage	Low-speed sensor	Plug cord (1 pc)	Finger guard (1 pc)	Screws with hex nuts (4 pairs)
ST1-109S085	109S085	100 V		489-016-L10*	109-019E	M3×40 mm
ST1-109S084	109S084	115 V		489-016-L10*	109-019E	
ST1-109S088	109S088	200 V		489-016-L10*	109-019E	
ST1-109S087	109S087	230 V		489-016-L10*	109-019E	
ST1-109S081	109S081	100 V		489-016-L10*	109-019E	
ST1-109S083	109S083	115 V		489-016-L10*	109-019E	
ST1-109S082	109S082	200 V		489-016-L10*	109-019E	
ST1-109S089	109S089	230 V		489-016-L10*	109-019E	
ST1-109S086	109S086	100 V		489-016-L10*	109-019E	
ST1-109S485-20	109S485-20		◯ (5 V)	489-016-L10*	109-019E	
ST1-109S485-30	109S485-30		◯ (12 V)	489-016-L10*	109-019E	
ST1-109S484-20	109S484-20	115 V	◯ (5 V)	489-016-L10*	109-019E	
ST1-109S484-30	109S484-30		◯ (12 V)	489-016-L10*	109-019E	
ST1-109S488-20	109S488-20	200 V	◯ (5 V)	489-016-L10*	109-019E	
ST1-109S488-30	109S488-30		◯ (12 V)	489-016-L10*	109-019E	
ST1-109S487-20	109S487-20	230 V	◯ (5 V)	489-016-L10*	109-019E	
ST1-109S487-30	109S487-30		◯ (12 V)	489-016-L10*	109-019E	
ST1-109S486-20	109S486-20	100 V	◯ (5 V)	489-016-L10*	109-019E	
ST1-109S486-30	109S486-30		◯ (12 V)	489-016-L10*	109-019E	

* PSE compatible, but not UL compatible.

Airflow - Static Pressure Characteristics

Standard

109S085, 109S084, 109S088, 109S087

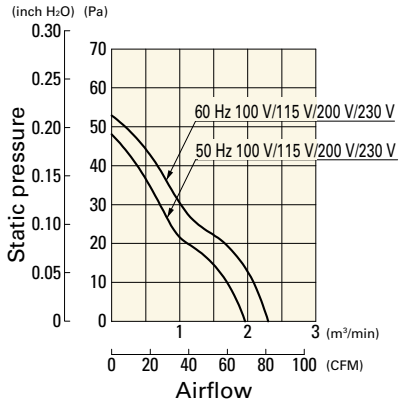

109S081, 109S083, 109S082, 109S089

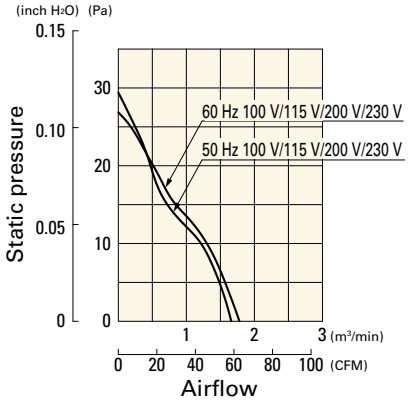

109S086

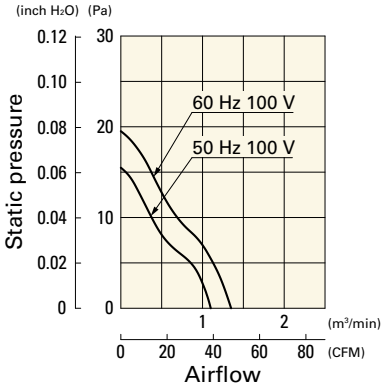

with Sensor

109S485, 109S484, 109S488, 109S487

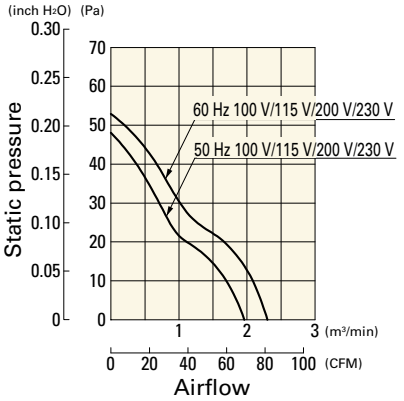

109S486

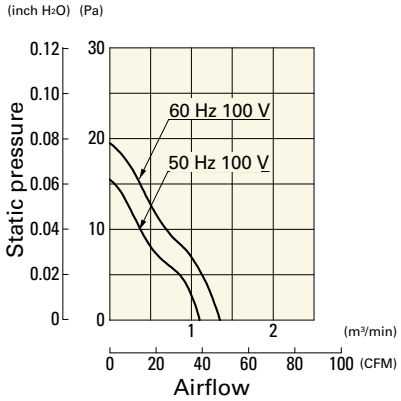

Dimensions (unit: mm)

Standard

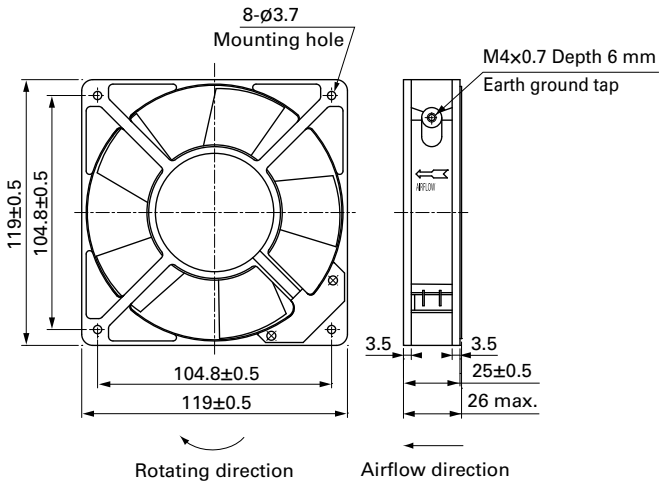

with Sensor

When mounting the model with a sensor, please screw-mount through both flanges as it has a sensor box.

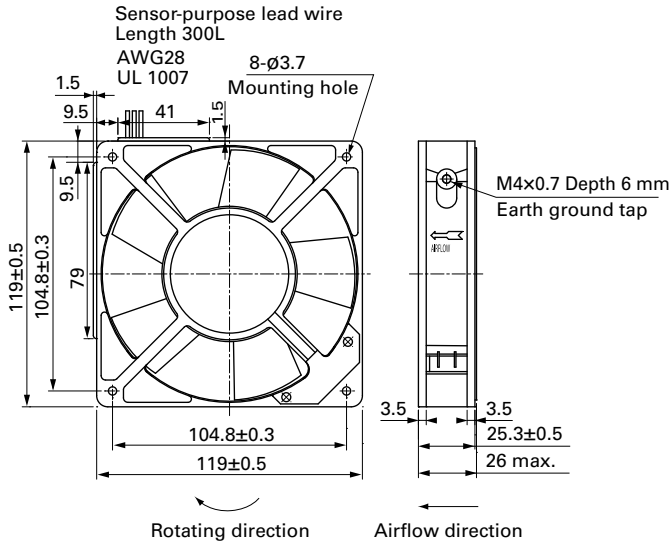

Reference Dimensions of Mounting Holes and Vent Opening (unit: mm)

Inlet side, Outlet side

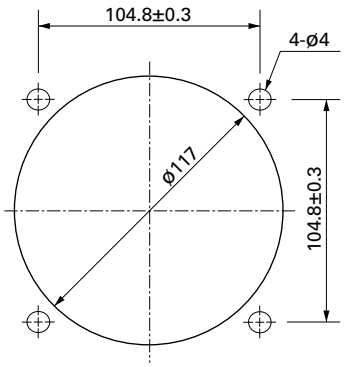

Connection Schematic

Standard

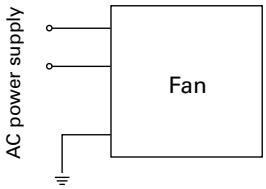

with Sensor

For fan power supply

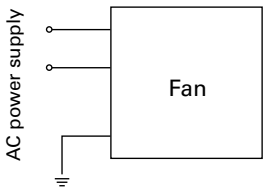

For sensor circuit
5 V (ITEM-20)

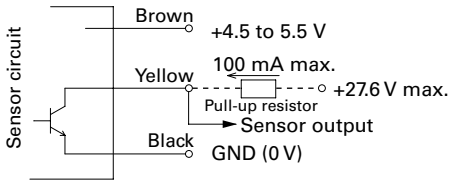

12 V (ITEM-30)

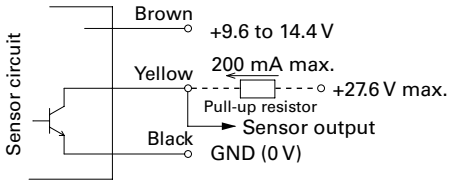

GND (Black) should be shared in case that power supply for sensor circuit (Brown) and that for sensor pull-up (Yellow) are separated.

Options

Finger guards
page: p. 591

Model no.: 109-019E, 109-019K

Resin finger guards
page: p. 597

Model no.: 109-1000G

Resin filter kits
page: p. 598

Model no.: 109-1000F13 (13PPI), 109-1000F20 (20PPI),
109-1000F30 (30PPI), 109-1000F40 (40PPI)

Plug cord
page: pp. 601 to 602

PSE compatible models
Model no.: 489-016-L10, 489-016-L21

UL/CSA certified models
Model no.: 489-047-L10, 489-047-L21

120×120×38 mm

San Ace 120

Certifications vary by model no. See the Specifications below.

General Specifications

- Material ..... Frame: Aluminum, Impeller: Plastic (Flammability: UL 94V-1)
- Expected life ..... See the table below. (L10 life: 90% survival rate for continuous operation in free air at 60°C, rated voltage) Expected life at 40°C is for reference only.
- Motor structure ..... Shaded coil motor
- Motor protection function ..... Locked rotor burnout protection, Reverse polarity protection For details, please refer to p. 608.
- Dielectric strength ..... 50/60 Hz, 1500 VAC, for 1 minute (between input terminal and G terminal)
- Dielectric strength (with sensor) ..... 50/60 Hz 1500 VAC 1 minute (between AC input terminal and G terminal) 50/60 Hz 1000 VAC 1 minute (between lead wire conductors and frame)
- Insulation resistance ..... 10 MΩ min. at 500 VDC
- Sound pressure level (SPL) ..... A-weighted sound pressure level (SPL) at 1 m away from the air inlet.
- Operating voltage range ..... Voltage of each model ±10%
- Storage temperature ..... -30 to +70°C (Non-condensing)
- Sensor-Purpose lead wire ..... ⊕Brown ⊖Black (Sensor) Yellow
- Mass ..... 550 g/580 g (with Sensor)

Specifications

Standard

Standard conformity: UL, CSA, TÜV, CE, UKCA, and PSE

Model no.	Rated voltage [V]	Frequency [Hz]	Input [W]	Current [A]	Locked rotor current [A]	Rated speed [min⁻¹]	Max. airflow [m³/min]	Max. airflow [CFM]	Max. static pressure [Pa]	Max. static pressure [inchH₂O]	SPL [dB (A)]	Operating temperature [°C]	Expected life [h]
109S075UL	100	50/60	18/16	0.24/0.21	0.32/0.28	2700/3100	2.5 /2.9	88.3/102.5	57.9/68.7	0.233/0.276	42/45	-30 to +60	25000/60°C (56000/40°C)
109S074UL	115			0.21/0.18	0.27/0.24								
109S078UL	200			0.12/0.1	0.16/0.14								
109S072UL	230			0.11/0.09	0.14/0.13								
109S005UL	100		14/12	0.18/0.16	0.25/0.22	2700/3100	2.35/2.7	83 / 95.4	55.9/65.7	0.224/0.264	40/43		
109S024UL	115			0.16/0.14	0.21/0.18								
109S008UL	200			0.09/0.08	0.13/0.11								
109S025UL	230			0.08/0.07	0.11/0.09								
109S029UL	100		14/12	0.18/0.16	0.23/0.21	2450/2700	2.15/2.35	76 / 83	44.1/49.0	0.177/0.197	38/40		
109S013UL			13/11	0.16/0.14	0.16/0.15	1800/2000	1.55/1.75	54.8/ 60.8	23.5/26.4	0.094/0.106	30/32		
109S006UL*			7/7	0.1 /0.09	0.1 /0.09	1650/1700	1.45/1.5	51.2/ 53	17.6/17.6	0.071/0.071	28/28		
	115		10/10	0.13/0.11	0.13/0.11	1800/1900	1.56/1.64	55 / 57.9	20 /20.6	0.08 /0.083	30/31		
109S010UL*	200		7/7	0.05/0.04	0.05/0.04	1650/1700	1.45/1.5	51.2/ 53	17.6/17.6	0.071/0.071	28/28		
	240		11/11	0.06/0.05	0.06/0.05	1800/1950	1.58/1.68	55.8/ 59.3	20.6/21.6	0.083/0.087	30/32		

*These are low-speed models.

Standard conformity: PSE

Model no.	Rated voltage [V]	Frequency [Hz]	Input [W]	Current [A]	Locked rotor current [A]	Rated speed [min⁻¹]	Max. airflow [m³/min]	Max. airflow [CFM]	Max. static pressure [Pa]	Max. static pressure [inchH₂O]	SPL [dB (A)]	Operating temperature [°C]	Expected life [h]
109S005	100	50/60	14/12	0.18/0.16	0.25/0.22	2700/3100	2.35/2.7	83 / 95.4	55.9/65.7	0.224/0.264	40/43	-30 to +60	25000/60°C (56000/40°C)
109S024	120			0.16/0.14	0.21/0.18								
109S008	200			0.09/0.08	0.13/0.11								
109S025	230			0.08/0.07	0.11/0.09								
109S013	100		13/11	0.16/0.14	0.16/0.15	1800/2000	1.55/1.75	54.8/ 60.8	23.5/26.4	0.094/0.106	30/32		
109S006*			7/7	0.1 /0.09	0.1 /0.09	1650/1700	1.45/1.5	51.2/ 53	17.6/17.6	0.071/0.071	28/28		
109S010*	200			0.05/0.04	0.05/0.04								

*These are low-speed models.

with Sensor

For sensor specifications, please refer to p. 614. Sensor specification differs depending on the fan's speed specification.
For a 5 V sensor power supply (ITEM-20), please append "-20" to the end of model number. E.g. 109S405UL-20
For a 12 V sensor power supply (ITEM-30), please append "-30" to the end of model number. E.g. 109S405UL-30

Model no.	Rated voltage [V]	Frequency [Hz]	Input [W]	Current [A]	Locked rotor current [A]	Rated speed [min⁻¹]	Max. airflow [m³/min]	Max. airflow [CFM]	Max. static pressure [Pa]	Max. static pressure [inchH₂O]	SPL [dB (A)]	Operating temperature [°C]	Expected life [h]
109S405UL	100	50/60	14/12	0.18/0.16	0.25/0.22	2700/3100	2.35/2.7	83 / 95.4	55.9/65.7	0.224/0.264	40/43	-10 to +60	25000/60°C (56000/40°C)
109S424UL	115			0.16/0.14	0.21/0.18								
109S408UL	200			0.09/0.08	0.13/0.11								
109S425UL	230			0.08/0.07	0.11/0.09								
109S429UL	100			0.18/0.16	0.23/0.21	2450/2700	2.15/2.35	76 / 83	44.1/49.0	0.177/0.197	38/40		
109S406UL*			7/6	0.09/0.08	0.1 /0.09	1650/1700	1.45/1.5	51 / 53	17.7/17.7	0.071/0.071	28/28		
109S475UL	100		18/16	0.24/0.21	0.32/0.28	2700/3100	2.5 /2.9	88.3/102.4	57.9/68.7	0.233/0.276	42/45		
109S474UL	115			0.21/0.18	0.27/0.24								
109S478UL	200			0.12/0.1	0.16/0.14								
109S472UL	230			0.11/0.09	0.14/0.13								

* These are low-speed models.

Note: These are Short Lead Time Service applicable models. Contact your point of sale for stock availability. For more information on the service, see p. 664.

For the San Ace 120AD 9AD type 120×120×38 mm fan, please refer to p. 502.

This fan works while internally converting AC power into DC power, providing the superior performance of a DC fan with the flexibility of AC input.

Set Models PSE (Japanese safety standard) compatible

A set of a fan, finger guard, plug cord (PSE compatible), and screws. For details, please refer to p. 665.

Order no.	Set items					
	Fan (1 pc)	Voltage	Low-speed sensor	Plug cord (1 pc)	Finger guard (1 pc)	Screws with hex nuts (4 pairs)
ST1-109S075UL	109S075UL	100 V		489-037-L10*	109-019E	M3×55 mm
ST1-109S074UL	109S074UL	115 V		489-037-L10*	109-019E	
ST1-109S078UL	109S078UL	200 V		489-037-L10*	109-019E	
ST1-109S072UL	109S072UL	230 V		489-037-L10*	109-019E	
ST1-109S005	109S005	100 V		489-006-L10*	109-019E	
ST1-109S005UL	109S005UL			489-037-L10*	109-019E	
ST1-109S024	109S024	120 V		489-006-L10*	109-019E	
ST1-109S024UL	109S024UL	115 V		489-037-L10*	109-019E	
ST1-109S008	109S008	200 V		489-006-L10*	109-019E	
ST1-109S008UL	109S008UL			489-037-L10*	109-019E	
ST1-109S025	109S025	230 V		489-006-L10*	109-019E	
ST1-109S025UL	109S025UL			489-037-L10*	109-019E	
ST1-109S029UL	109S029UL	100 V		489-037-L10*	109-019E	
ST1-109S013	109S013			489-006-L10*	109-019E	
ST1-109S013UL	109S013UL			489-037-L10*	109-019E	
ST1-109S006	109S006			489-006-L10*	109-019E	
ST1-109S006UL	109S006UL	100 V 115 V		489-037-L10*	109-019E	
ST1-109S010	109S010	200 V		489-006-L10*	109-019E	
ST1-109S010UL	109S010UL	200 V 240 V		489-037-L10*	109-019E	
ST1-109S405UL-20	109S405UL-20	100 V	◯ (5 V)	489-037-L10*	109-019E	
ST1-109S405UL-30	109S405UL-30		◯ (12 V)	489-037-L10*	109-019E	
ST1-109S424UL-20	109S424UL-20	115 V	◯ (5 V)	489-037-L10*	109-019E	
ST1-109S424UL-30	109S424UL-30		◯ (12 V)	489-037-L10*	109-019E	
ST1-109S408UL-20	109S408UL-20	200 V	◯ (5 V)	489-037-L10*	109-019E	
ST1-109S408UL-30	109S408UL-30		◯ (12 V)	489-037-L10*	109-019E	
ST1-109S425UL-20	109S425UL-20	230 V	◯ (5 V)	489-037-L10*	109-019E	
ST1-109S425UL-30	109S425UL-30		◯ (12 V)	489-037-L10*	109-019E	
ST1-109S429UL-20	109S429UL-20	100 V	◯ (5 V)	489-037-L10*	109-019E	
ST1-109S429UL-30	109S429UL-30		◯ (12 V)	489-037-L10*	109-019E	
ST1-109S406UL-20	109S406UL-20	100 V	◯ (5 V)	489-037-L10*	109-019E	
ST1-109S406UL-30	109S406UL-30		◯ (12 V)	489-037-L10*	109-019E	
ST1-109S475UL-20	109S475UL-20	100 V	◯ (5 V)	489-037-L10*	109-019E	
ST1-109S475UL-30	109S475UL-30		◯ (12 V)	489-037-L10*	109-019E	
ST1-109S474UL-20	109S474UL-20	115 V	◯ (5 V)	489-037-L10*	109-019E	
ST1-109S474UL-30	109S474UL-30		◯ (12 V)	489-037-L10*	109-019E	
ST1-109S478UL-20	109S478UL-20	200 V	◯ (5 V)	489-037-L10*	109-019E	
ST1-109S478UL-30	109S478UL-30		◯ (12 V)	489-037-L10*	109-019E	
ST1-109S472UL-20	109S472UL-20	230 V	◯ (5 V)	489-037-L10*	109-019E	
ST1-109S472UL-30	109S472UL-30		◯ (12 V)	489-037-L10*	109-019E	

* PSE compatible, but not UL compatible.

Airflow - Static Pressure Characteristics

Standard

109S075UL, 109S074UL, 109S078UL, 109S072UL

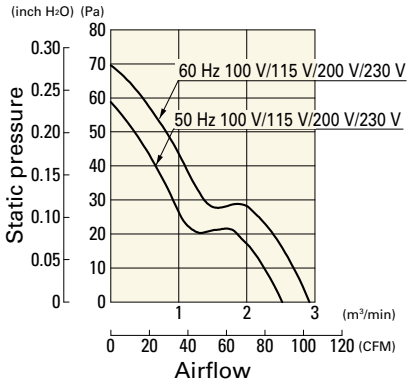

109S005, 109S005UL, 109S024, 109S024UL, 109S008, 109S008UL, 109S025, 109S025UL

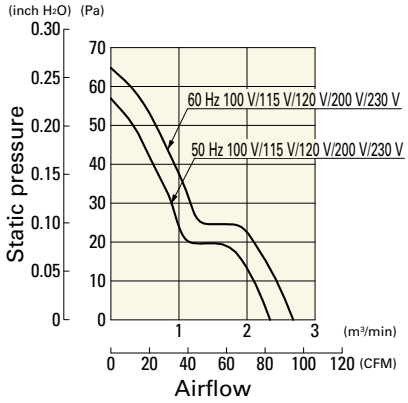

109S029UL

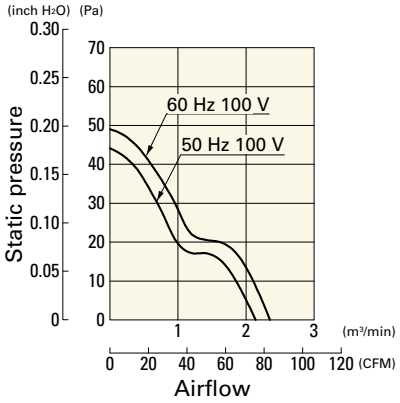

109S013, 109S013UL

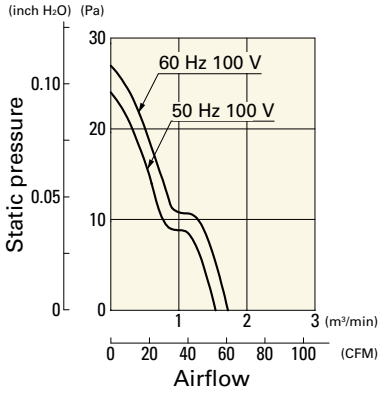

109S006, 109S006UL, 109S010, 109S010UL

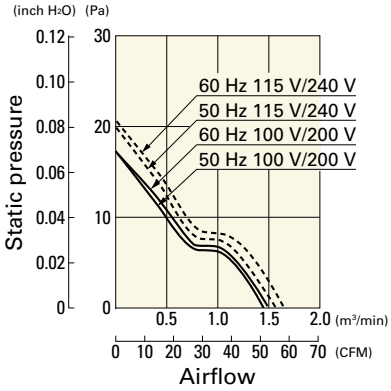

with Sensor

109S405UL, 109S424UL, 109S408UL, 109S425UL

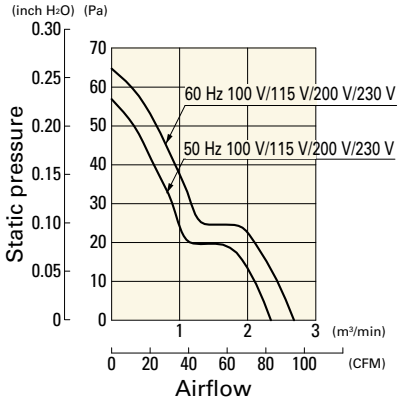

109S429UL

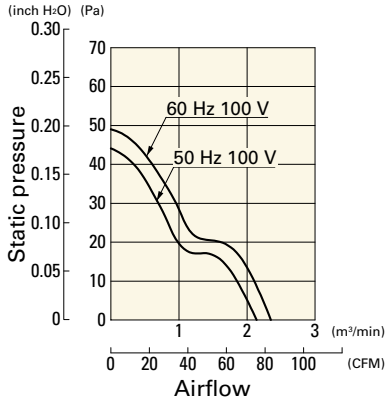

109S406UL

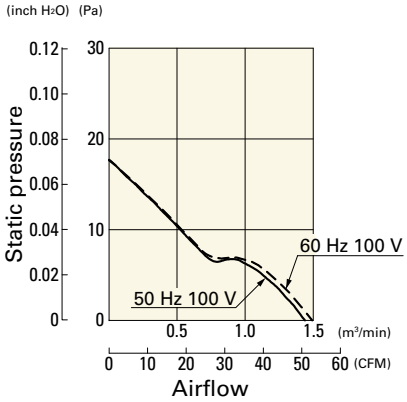

109S475UL, 109S474UL, 109S478UL, 109S472UL

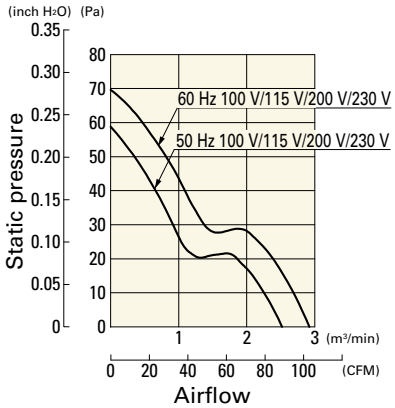

Dimensions (unit: mm)

Standard

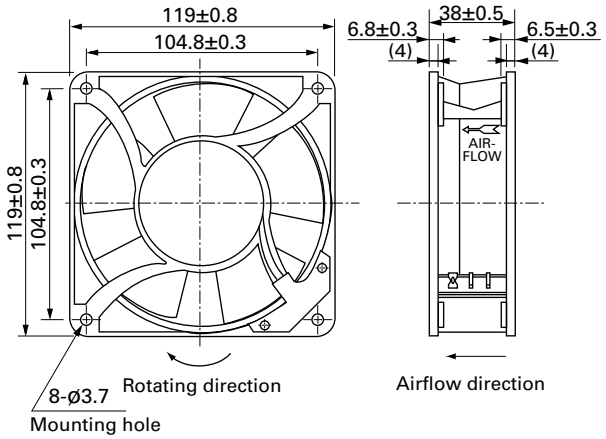

with Sensor

When mounting the model with a sensor, please screw-mount through both flanges as it has a sensor box.

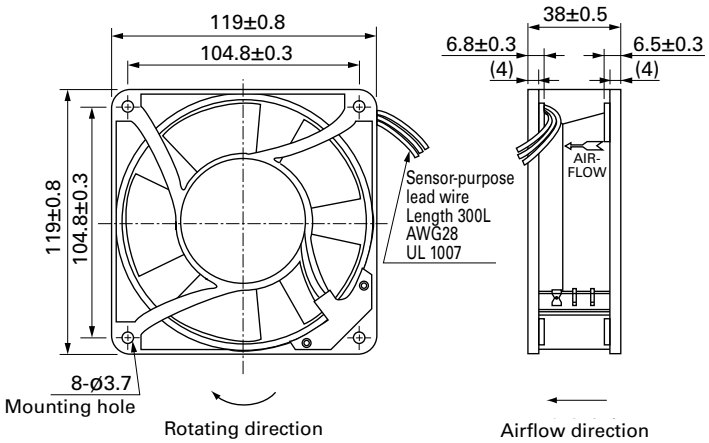

Reference Dimensions of Mounting Holes and Vent Opening (unit: mm)

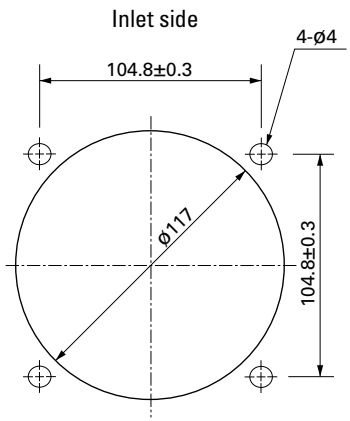

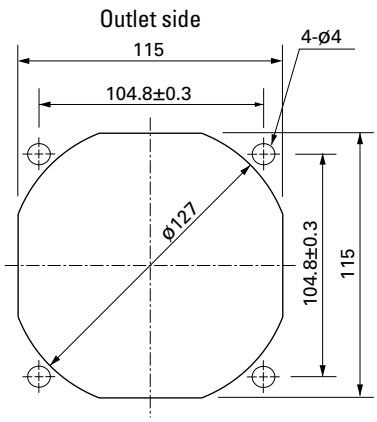

Connection Schematic

Standard

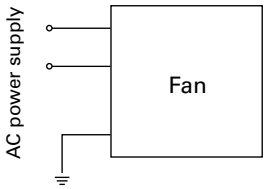

with Sensor

For fan power supply

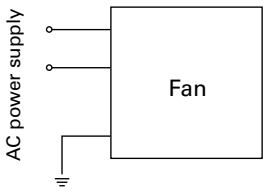

For sensor circuit
5 V (ITEM-20)

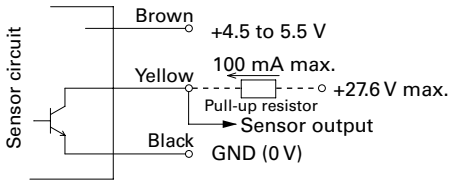

12 V (ITEM-30)

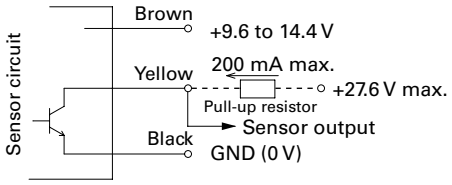

GND (Black) should be shared in case that power supply for sensor circuit (Brown) and that for sensor pull-up (Yellow) are separated.

Options

Finger guards
page: p. 591

Model no.: 109-019E, 109-019K

Resin finger guards
page: p. 597

Model no.: 109-1000G

Resin filter kits
page: p. 598

Model no.: 109-1000F13 (13PPI), 109-1000F20 (20PPI),
109-1000F30 (30PPI), 109-1000F40 (40PPI)

Filter kits
page: p. 600

Model no.: 109-018

Screen kits
page: p. 600

Model no.: 109-020

Plug cord
page: pp. 601 to 602

PSE compatible models
- Dedicated models for fans whose model numbers not ending with "UL"
  Model no.: 489-006-L10, 489-006-L21, 489-006-L35
- Dedicated models for fans whose model numbers ending with "UL"
  Model no.: 489-037-L10, 489-037-L21, 489-037-L35

UL/CSA certified models
Model no.: 489-007-L10, 489-007-L21

160×160×51 mm

San Ace 160

Only standard fans (without sensors) have acquired CSA certification.

General Specifications

- Material ..... Frame: Aluminum, Impeller: Plastic (Flammability: UL 94V-1)
- Expected life ..... See the table below. (L10 life: 90% survival rate for continuous operation in free air at 60˚C, rated voltage) Expected life at 40°C is for reference only.
- Motor structure ..... Capacitor motor
- Motor protection function ..... Locked rotor burnout protection, Reverse polarity protection For details, please refer to p. 608.
- Dielectric strength ..... 50/60 Hz, 1500 VAC, for 1 minute (between input terminal and frame)
- Dielectric strength (with sensor) ..... 50/60 Hz 1500 VAC 1 minute (between AC input terminal and frame) 50/60 Hz 1000 VAC 1 minute (between lead wire conductors and frame)
- Insulation resistance ..... 10 MΩ min. at 500 VDC
- Sound pressure level (SPL) ..... A-weighted sound pressure level (SPL) at 1 m away from the air inlet.
- Operating voltage range ..... Voltage of each model ±10%
- Storage temperature ..... -30 to +70˚C (Non-condensing)
- Sensor-Purpose lead wire ..... ⊕Brown ⊖Black (Sensor) Yellow
- Mass ..... 1100 g

Specifications

Standard

Model no.	Rated voltage [V]	Frequency [Hz]	Input [W]	Current [A]	Locked rotor current [A]	Rated speed [min⁻¹]	Max. airflow [m³/min]	Max. airflow [CFM]	Max. static pressure [Pa]	Max. static pressure [inchH₂O]	SPL [dB (A)]	Operating temperature [˚C]	Expected life [h]
109-601	100	50/60	37.5/33	0.43/0.35	0.72/0.7	2850/3350	7.2/8.5	254.4/300.4	156.8/166.6	0.63/0.669	56/60	-30 to +60	25000/60˚C (56000/40˚C)
109-604	115			0.39/0.31	0.62/0.61								
109-602	200			0.23/0.18	0.36/0.35								
109-603	230			0.21/0.16	0.32/0.31								

with Sensor

For sensor specifications, please refer to p. 614. Sensor specification differs depending on the fan's speed specification.
For a 5 V sensor power supply (ITEM-20), please append "-20" to the end of model number. E.g. 109-641-20
For a 12 V sensor power supply (ITEM-30), please append "-30" to the end of model number. E.g. 109-641-30

Model no.	Rated voltage [V]	Frequency [Hz]	Input [W]	Current [A]	Locked rotor current [A]	Rated speed [min⁻¹]	Max. airflow [m³/min]	Max. airflow [CFM]	Max. static pressure [Pa]	Max. static pressure [inchH₂O]	SPL [dB (A)]	Operating temperature [˚C]	Expected life [h]
109-641	100	50/60	37.5/33	0.43/0.35	0.72/0.7	2850/3350	7.2/8.5	254.4/300.4	156.8/166.6	0.63/0.669	56/60	-10 to +60	25000/60˚C (56000/40˚C)
109-644	115			0.39/0.31	0.62/0.61								
109-642	200			0.23/0.18	0.36/0.35								
109-643	230			0.21/0.16	0.32/0.31								

Note: These are Short Lead Time Service applicable models. Contact your point of sale for stock availability. For more information on the service, see p. 664.

Set Models PSE (Japanese safety standard) compatible

A set of a fan, finger guard, plug cord (PSE compatible), and screws. For details, please refer to p. 665.

Order no.	Set items					
	Fan (1 pc)	Voltage	Low-speed sensor	Plug cord (1 pc)	Finger guard (1 pc)	Screws with hex nuts (4 pairs)
ST1-109-601	109-601	100 V		489-1652-L10*	109-619E	M5×20 mm
ST1-109-604	109-604	115 V		489-1652-L10*	109-619E	
ST1-109-602	109-602	200 V		489-1652-L10*	109-619E	
ST1-109-603	109-603	230 V		489-1652-L10*	109-619E	
ST1-109-641-20	109-641-20	100 V	◯ (5 V)	489-1652-L10*	109-619E	
ST1-109-641-30	109-641-30		◯ (12 V)	489-1652-L10*	109-619E	
ST1-109-644-20	109-644-20	115 V	◯ (5 V)	489-1652-L10*	109-619E	
ST1-109-644-30	109-644-30		◯ (12 V)	489-1652-L10*	109-619E	
ST1-109-642-20	109-642-20	200 V	◯ (5 V)	489-1652-L10*	109-619E	
ST1-109-642-30	109-642-30		◯ (12 V)	489-1652-L10*	109-619E	
ST1-109-643-20	109-643-20	230 V	◯ (5 V)	489-1652-L10*	109-619E	
ST1-109-643-30	109-643-30		◯ (12 V)	489-1652-L10*	109-619E	

* PSE compatible, but not UL compatible.

Airflow - Static Pressure Characteristics

Standard

109-601, 109-604, 109-602, 109-603

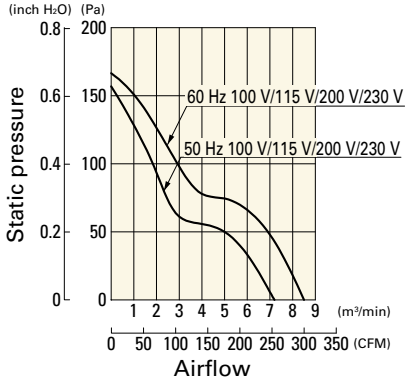

with Sensor

109-641, 109-644, 109-642, 109-643

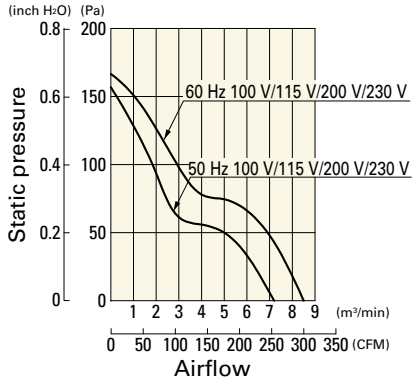

Dimensions (unit: mm)

Standard

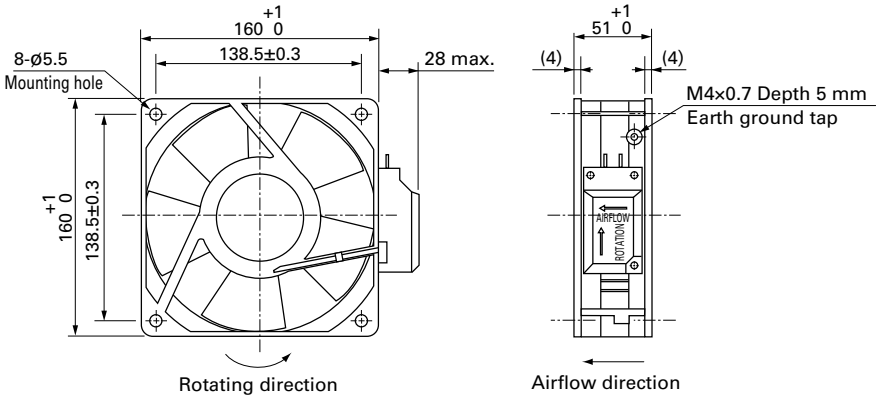

with Sensor

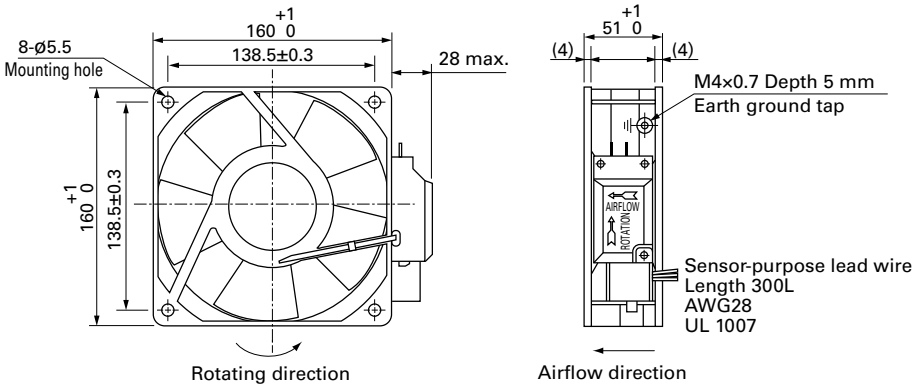

Reference Dimensions of Mounting Holes and Vent Opening (unit: mm)

Inlet side, Outlet side

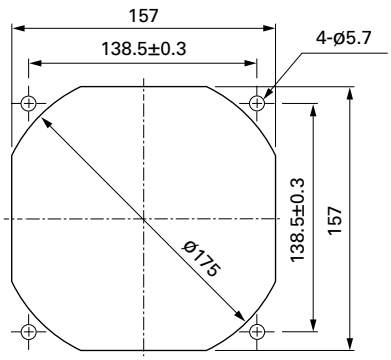

Connection Schematic

Standard

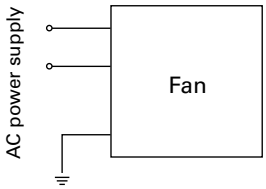

with Sensor

For fan power supply

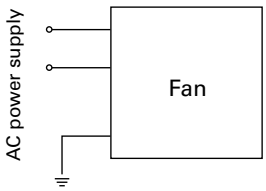

For sensor circuit
5 V (ITEM-20)

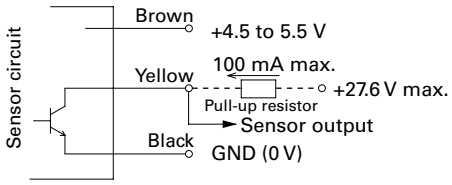

12 V (ITEM-30)

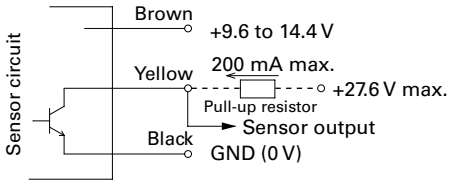

GND (Black) should be shared in case that power supply for sensor circuit (Brown) and that for sensor pull-up (Yellow) are separated.

Options

Finger guards

page: p. 591

Model no.: 109-619E, 109-619H

Plug cord

page: pp. 601 to 602

PSE compatible models
Model no.: 489-1619-L10, 489-1619-L21

UL/CSA certified models
Model no.: 489-084-L10, 489-084-L21

PSE compatible, UL/CSA [c-UL] certified models
Model no.: 489-1652-L10, 489-1652-L21

ø172×150×51 mm

San Ace 172

Sidecut type

General Specifications

- Material ..... Frame: Aluminum, Impeller: Plastic (Flammability: UL 94V-1)
- Expected life ..... See the table below. (L10 life: 90% survival rate for continuous operation in free air at 60˚C, rated voltage) Expected life at 40°C is for reference only.
- Motor structure ..... Capacitor motor
- Motor protection function ..... Locked rotor burnout protection, Reverse polarity protection For details, please refer to p. 608.
- Dielectric strength ..... 50/60 Hz, 1500 VAC, for 1 minute (between input terminal and frame)
- Insulation resistance ..... 10 MΩ min. at 500 VDC
- Sound pressure level (SPL) ..... A-weighted sound pressure level (SPL) at 1 m away from the air inlet.
- Operating voltage range ..... Voltage of each model ±10%
- Storage temperature ..... -30 to +70˚C (Non-condensing)
- Mass ..... 1000 g

Specifications

Model no.	Rated voltage [V]	Frequency [Hz]	Input [W]	Current [A]	Locked rotor current [A]	Rated speed [min⁻¹]	Max. airflow [m³/min]	Max. airflow [CFM]	Max. static pressure [Pa]	Max. static pressure [inchH₂O]	SPL [dB (A)]	Operating temperature [˚C]	Expected life [h]
109S301	100	50/60	27/25	0.33/0.25	0.65/0.64	2900/3500	5.3/6.4	187.3/226.1	147/196	0.59/0.787	51/56	-30 to +60	25000/60˚C (56000/40˚C)
109S304	115			0.29/0.22	0.55/0.54								
109S302	200			0.16/0.13	0.33/0.32								
109S303	230			0.14/0.11	0.28/0.27								

Note: These are Short Lead Time Service applicable models. Contact your point of sale for stock availability. For more information on the service, see p. 664.

Set Models PSE (Japanese safety standard) compatible

A set of a fan, finger guard, plug cord (PSE compatible), and screws. For details, please refer to p. 665.

Order no.	Set items					
	Fan (1 pc)	Voltage	Low-speed sensor	Plug cord (1 pc)	Finger guard (1 pc)	Screws with hex nuts (4 pairs)(2)
ST1-109S301	109S301	100 V		489-1619-L10(1)	109-319E	M4×25 mm
ST1-109S304	109S304	115 V		489-1619-L10(1)	109-319E	
ST1-109S302	109S302	200 V		489-1619-L10(1)	109-319E	
ST1-109S303	109S303	230 V		489-1619-L10(1)	109-319E	

(1) PSE compatible, but not UL compatible.
(2) Though these are 2-hole or 3-hole frame mount types, 4 screws are included for extra.

Airflow - Static Pressure Characteristics

109S301, 109S304, 109S302, 109S303

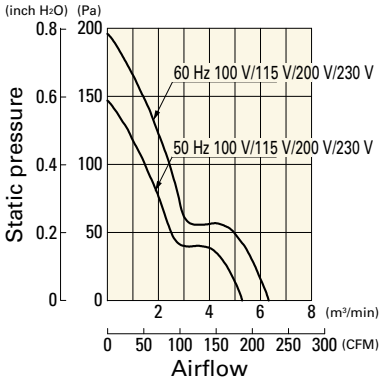

Dimensions (unit: mm)

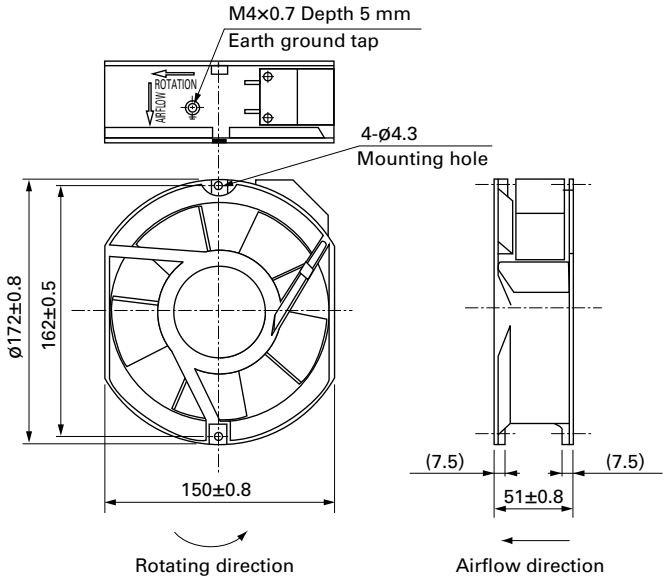

Reference Dimensions of Mounting Holes and Vent Opening (unit: mm)

Inlet side, Outlet side

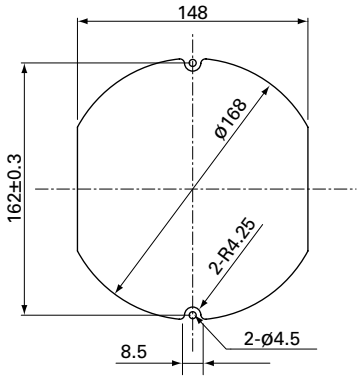

Connection Schematic

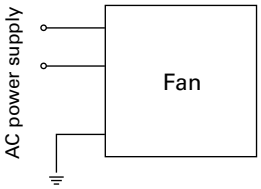

Options

Finger guards

page: p. 592

Model no.: 109-319J, 109-319E, 109-319H

Plug cord

page: pp. 601 to 602

PSE compatible models
Model no.: 489-1619-L10, 489-1619-L21

UL/CSA certified models
Model no.: 489-084-L10, 489-084-L21

ø172×51 mm

San Ace 172

Only standard fans (without sensors) have acquired CSA certification. Round type

General Specifications

- Material ..... Frame: Aluminum, Impeller: Plastic (Flammability: UL 94V-1)
- Expected life ..... See the table below. (L10 life: 90% survival rate for continuous operation in free air at 60°C, rated voltage) Expected life at 40°C is for reference only.
- Motor structure ..... Capacitor motor
- Motor protection function ..... Locked rotor burnout protection, Reverse polarity protection For details, please refer to p. 608.
- Dielectric strength ..... 50/60 Hz, 1500 VAC, for 1 minute (between input terminal and frame)
- Dielectric strength (with sensor) ..... 50/60 Hz 1500 VAC 1 minute (between AC input terminal and frame) 50/60 Hz 1000 VAC 1 minute (between lead wire conductors and frame)
- Insulation resistance ..... 10 MΩ min. at 500 VDC
- Sound pressure level (SPL) ..... A-weighted sound pressure level (SPL) at 1 m away from the air inlet.
- Operating voltage range ..... Voltage of each model ±10%
- Storage temperature ..... -30 to +70°C (Non-condensing)
- Sensor-Purpose lead wire ..... ⊕Brown ⊖Black (Sensor) Yellow
- Mass ..... 1000 g

Specifications

Standard

Model no.	Rated voltage [V]	Frequency [Hz]	Input [W]	Current [A]	Locked rotor current [A]	Rated speed [min⁻¹]	Max. airflow [m³/min]	Max. airflow [CFM]	Max. static pressure [Pa]	Max. static pressure [inchH₂O]	SPL [dB (A)]	Operating temperature [°C]	Expected life [h]
109-311	100	50/60	27/25	0.33/0.25	0.65/0.64	2900/3500	5.3/6.4	187.3/226.1	147/196	0.59/0.787	47/51	-30 to +60	25000/60°C (56000/40°C)
109-314	115			0.29/0.22	0.55/0.54								
109-312	200			0.16/0.13	0.33/0.32								
109-313	230			0.14/0.11	0.28/0.27								

with Sensor

For sensor specifications, please refer to p. 614. Sensor specification differs depending on the fan's speed specification.
For a 5 V sensor power supply (ITEM-20), please append "-20" to the end of model number. E.g. 109-371-20
For a 12 V sensor power supply (ITEM-30), please append "-30" to the end of model number. E.g. 109-371-30

Model no.	Rated voltage [V]	Frequency [Hz]	Input [W]	Current [A]	Locked rotor current [A]	Rated speed [min⁻¹]	Max. airflow [m³/min]	Max. airflow [CFM]	Max. static pressure [Pa]	Max. static pressure [inchH₂O]	SPL [dB (A)]	Operating temperature [°C]	Expected life [h]
109-371	100	50/60	27/25	0.33/0.25	0.65/0.64	2900/3500	5.3/6.4	187.3/226.1	147/196	0.59/0.787	47/51	-10 to +60	25000/60°C (56000/40°C)
109-374	115			0.29/0.22	0.55/0.54								
109-372	200			0.16/0.13	0.33/0.32								
109-373	230			0.14/0.11	0.28/0.27								

Note: These are Short Lead Time Service applicable models. Contact your point of sale for stock availability. For more information on the service, see p. 664.

Set Models PSE (Japanese safety standard) compatible

A set of a fan, finger guard, plug cord (PSE compatible), and screws. For details, please refer to p. 665.

Order no.	Set items					
	Fan (1 pc)	Voltage	Low-speed sensor	Plug cord (1 pc)	Finger guard (1 pc)	Screws with hex nuts (4 pairs)
ST1-109-311	109-311	100 V		489-1619-L10*	109-319E	M4×25 mm
ST1-109-314	109-314	115 V		489-1619-L10*	109-319E	
ST1-109-312	109-312	200 V		489-1619-L10*	109-319E	
ST1-109-313	109-313	230 V		489-1619-L10*	109-319E	
ST1-109-371-20	109-371-20	100 V	◯ (5 V)	489-1619-L10*	109-319E	
ST1-109-371-30	109-371-30		◯ (12 V)	489-1619-L10*	109-319E	
ST1-109-374-20	109-374-20	115 V	◯ (5 V)	489-1619-L10*	109-319E	
ST1-109-374-30	109-374-30		◯ (12 V)	489-1619-L10*	109-319E	
ST1-109-372-20	109-372-20	200 V	◯ (5 V)	489-1619-L10*	109-319E	
ST1-109-372-30	109-372-30		◯ (12 V)	489-1619-L10*	109-319E	
ST1-109-373-20	109-373-20	230 V	◯ (5 V)	489-1619-L10*	109-319E	
ST1-109-373-30	109-373-30		◯ (12 V)	489-1619-L10*	109-319E	

* PSE compatible, but not UL compatible.

Airflow - Static Pressure Characteristics

Standard

109-311, 109-314, 109-312, 109-313

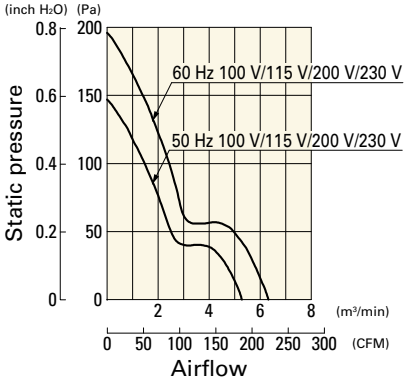

with Sensor

109-371, 109-374, 109-372, 109-373

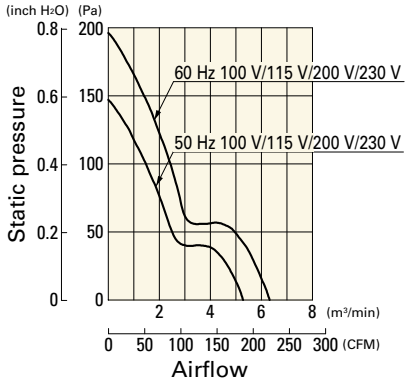

Dimensions (unit: mm)

Standard

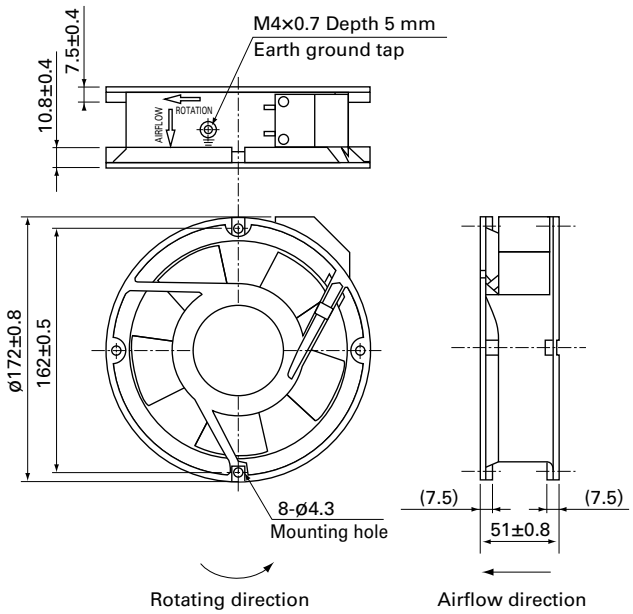

with Sensor

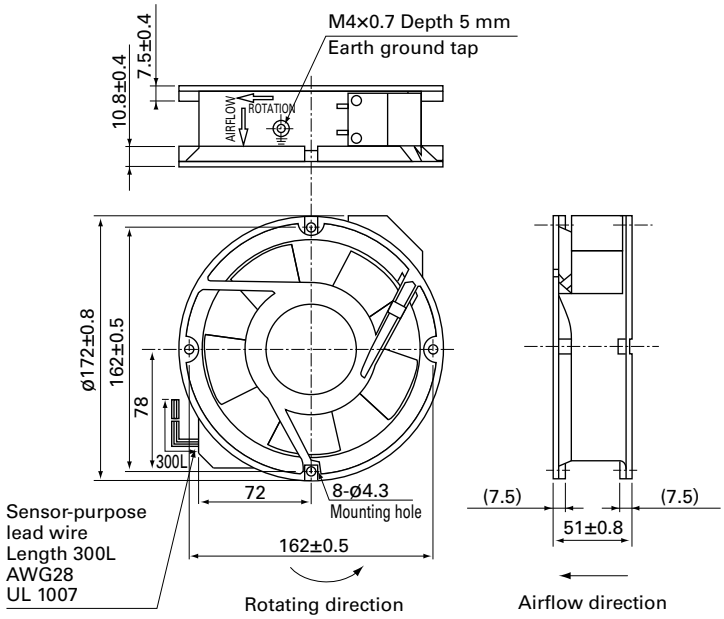

Reference Dimensions of Mounting Holes and Vent Opening (unit: mm)

Inlet side, Outlet side

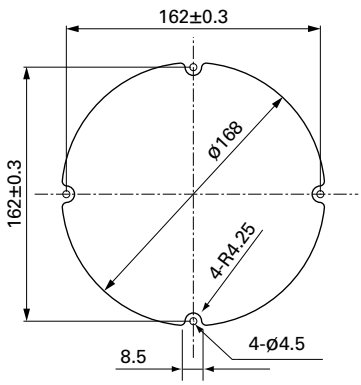

Connection Schematic

Standard

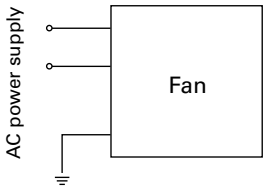

with Sensor

For fan power supply

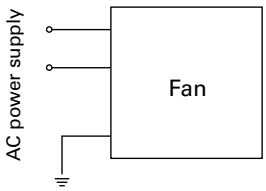

For sensor circuit
5 V (ITEM-20)

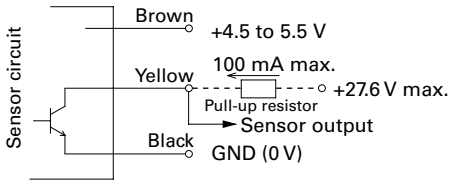

12 V (ITEM-30)

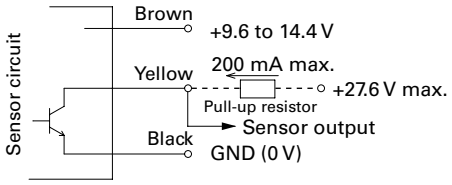

GND (Black) should be shared in case that power supply for sensor circuit (Brown) and that for sensor pull-up (Yellow) are separated.

Options

Finger guards

page: p. 592

Model no.: 109-319E, 109-319H, 109-1066

Plug cord

page: pp. 601 to 602

PSE compatible models
Model no.: 489-1619-L10, 489-1619-L21

UL/CSA certified models
Model no.: 489-084-L10, 489-084-L21

San Ace Controller

Features

Preventive maintenance of equipment (IoT functionality)

- Easy to connect to user's terminal devices. (Wireless LAN / wired LAN)
- Enables users to monitor the status of fans and sensors from remote terminal devices.
- Enables users to control the fan speed remotely via terminal devices.
- Detects outlier sensor measurements and sends alerts.
- Saves the fan's cumulative operating time and other fan measurement data to the cloud for later use.
- Prevents heat problems with user equipment, contributing to reducing maintenance time and costs.

Low noise and high energy efficiency (Automatic control)

- Stores temperature, humidity, and air pressure measurements for automatic fan speed control based on the setting conditions.
- Makes fan cooling and ventilation more efficient, reducing noise and improving efficiency.

Optimized fan settings (Manual control)

- Can connect and control a maximum of four fans, enabling different speed settings for individual fans.
- Optimizes the airflow and static pressure of individual fans in multi-fan systems.

Only the 9CT1-U001 model is cUL-certified.

Specifications

		With wireless LAN	Without wireless LAN	With wireless LAN, cUL certified
Model no.		**9CT1-001**	**9CT1-002**	**9CT1-U001**(1)
Rated voltage [VDC]		12/24/48		12/24
Power consumption [W]		3.1(2)		
Max. input power		970 W or less		64 W or less (At 12 VDC) 100 W or less (At 24 VDC)
Operating voltage range [VDC]		7 to 60		7 to 27.6
Operating temperature range [˚C]		-20 to +70		
Control functions		Manual / automatic		
Control signal		PWM signal High-level voltage (V_{OH}): 3.3/5 V Frequency: 25 kHz		
Monitoring criteria		Fan speed, fan current, fan operation hours, sensor detection value, external input		
No. of connectable fans		Max. 4		
Max. fan connection terminal current (per terminal)		5 A		5 A (At 12 VDC) 4 A (At 24 VDC)
Max. output current (Total)		20 A		5 A (At 12 VDC) 4 A (At 24 VDC)
Compatible sensors(3)		Temperature / humidity, air pressure, acceleration		
No. of connectable sensors		Max. 4		
External I/O functions	Input	Photocoupler-isolated input, ON: 15 to 28.8 VDC, OFF: 0 to 5 VDC		
	Output	Photocoupler-isolated open-collector output, load voltage: 28.8 VDC or less, output current: 0.1 A or less		
Communication	Wireless	IEEE 802.11b/g/n, frequency: 2.4 GHz(4)	—	IEEE 802.11b/g/n, frequency: 2.4 GHz(4)
	Wired	Ethernet 10BASE-T, 100BASE-TX		
Size [mm]		50 (W) × 135 (D) × 180 (H)		
Mass [g]		450		
Material		Casing: Plastic		

(1) Use a UL Class 2 power supply. (2) For use of this product alone, at 20˚C ambient temperature
(3) Use our dedicated sensors (options). (4) Available channels: Ch. 1 to 11

Front View

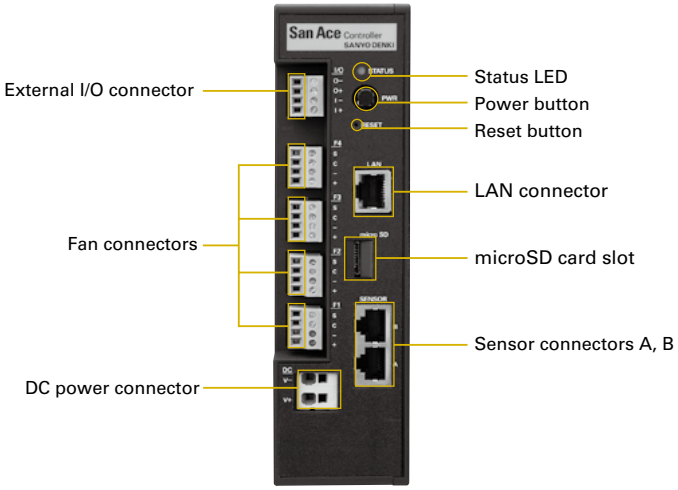

System Configuration

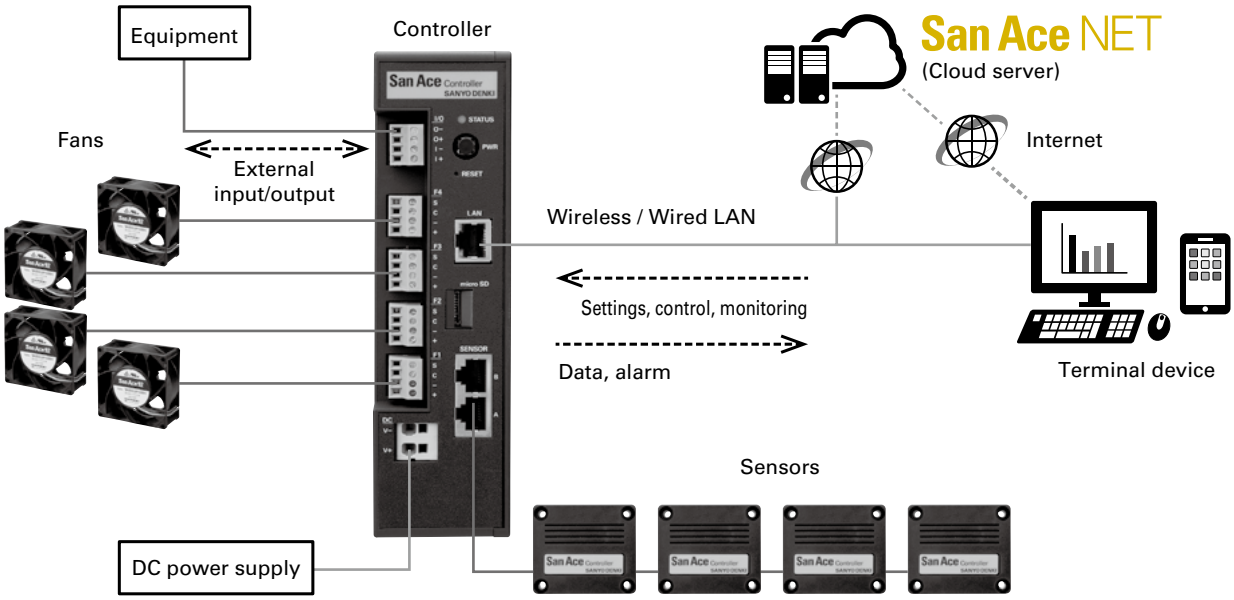

Graphical User Interface (GUI) Screens

Settings, control, monitoring, and data download can be done through web browsers.

Sample screens

Control settings

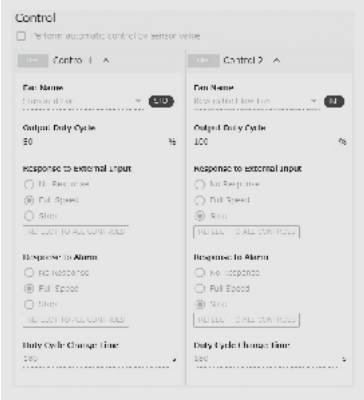

Measurement data

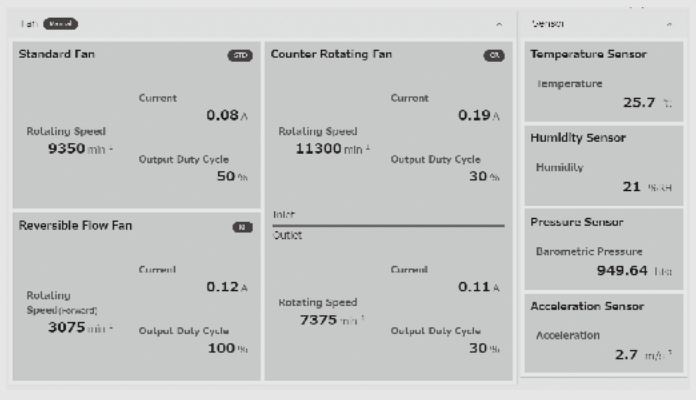

Graphs

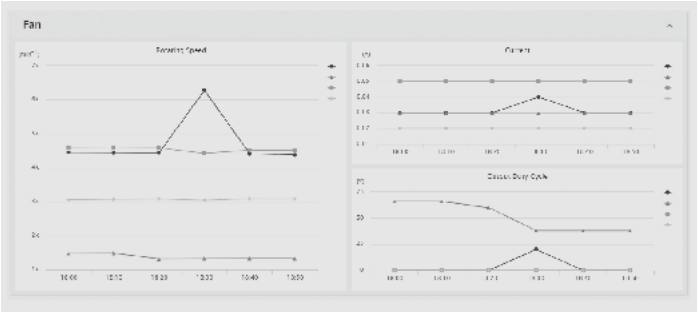

Alarms

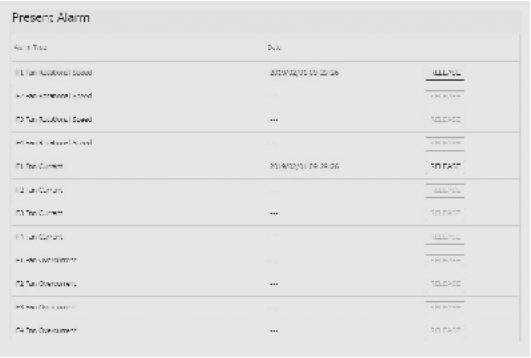

Dimensions (unit: mm)

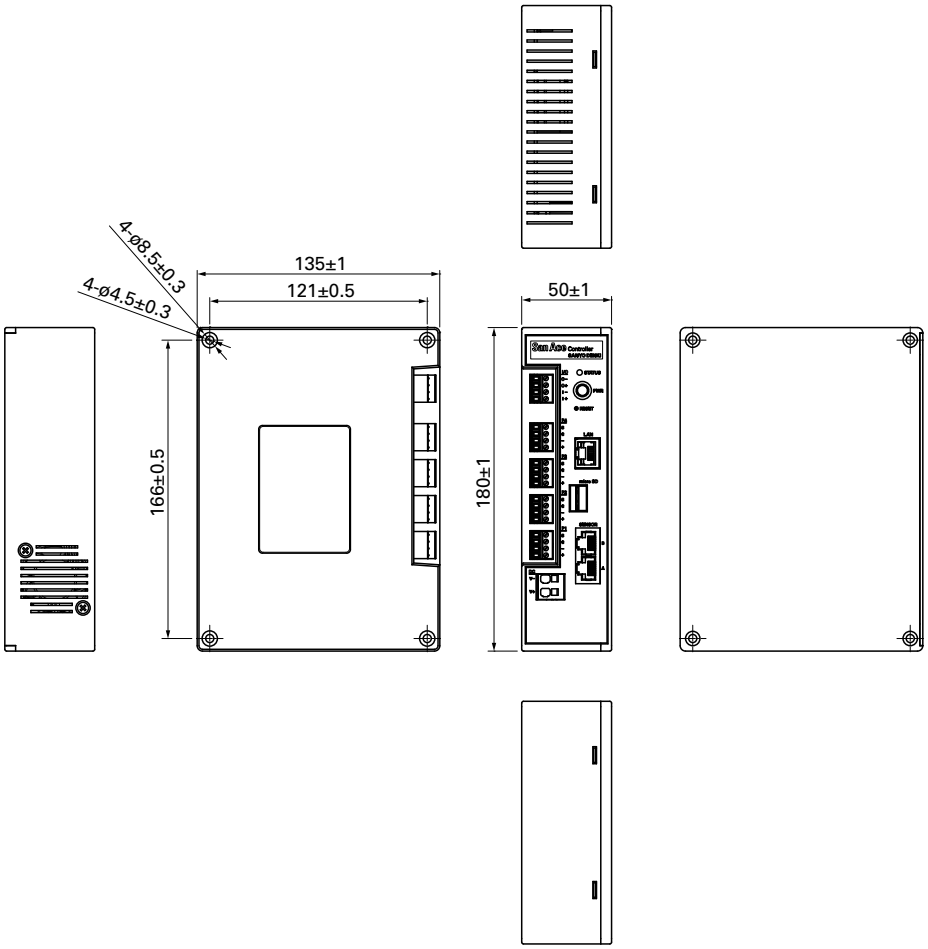

Options

- Sensors

Sensor type	Temperature / Humidity sensor	Air pressure sensor	Accelerometer
Model no.	**9CT1-T**	**9CT1-P**	**9CT1-A**
Measurement range	Temperature: -20 to +70˚C Humidity: 20 to 85% RH(1)	Air pressure: 800 to 1100 hPa	Acceleration: 0 to 60 m/s^2 (2)
Operating temperature range [˚C]	-20 to +70		
Operating humidity range [% RH]	20 to 85(1)		
Size [mm]	53 (W) × 46 (D) × 22 (H)		
Mass [g]	35		
Material	Casing: Plastic		

(1) Non-condensing (2) Total acceleration from three axes

- Dimensions (unit: mm)

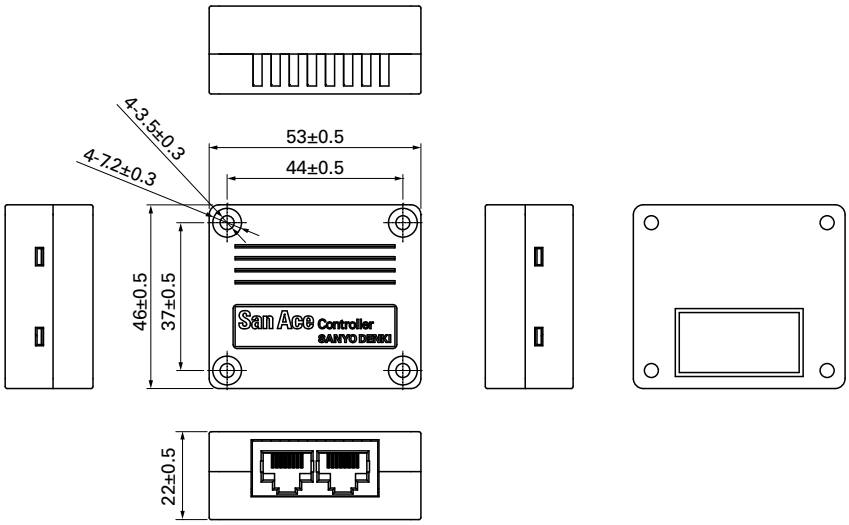

- Din rail adapter

Model no.	9CT1-D
Mass [g]	110
Material	Stainless steel
Items included	Screw: 2 pcs

- Dimensions (unit: mm)

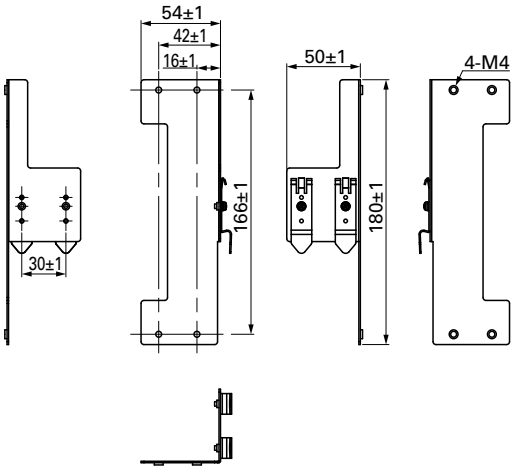

PWM Controller

Features

Reduces system power consumption and fan noise

For PWM fan speed control, a PWM control circuit needs to be newly designed and configured.

By using this product, however, PWM fans can be fully utilized without the need for preparing new circuits, contributing to reducing the system power consumption and the fan noise.

Can be common-powered by the fan power supply

The controller can be powered by the fan power supply of rated voltage 12, 24, and 48 VDC, and no separate supply is required.

Maximum of four fans connectable

Up to four PWM fans can be connected and controlled.

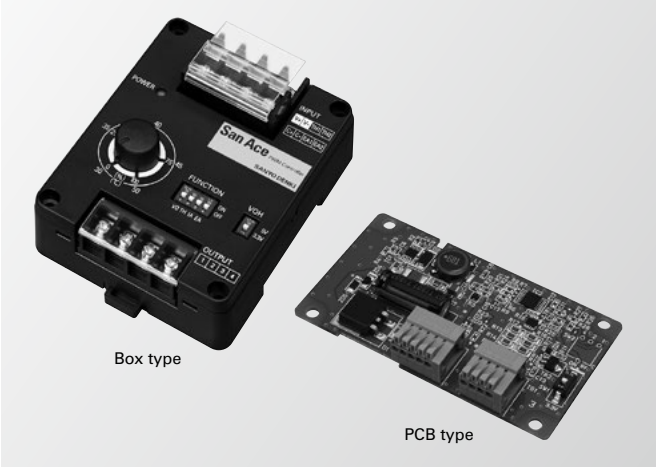

Specifications

Box type

Model no.		9PC8666X-S001	9PC8666X-S101
Size [mm]		86 (H) × 66 (W) × 38 (D)	
Rated voltage [V]		12/24/48	
Power consumption [W]		0.2(1)	
Operating temperature [˚C]		-20 to +70	
Input terminal	Input voltage range [V] (V+, V-)	7 to 60	
	Control voltage range [V]	0 to 5.5	
Output terminal	PWM signal output	V_{OH} (high level voltage): 3.3 or 5 VDC selectable	
	PWM frequency [kHz]	25	1
	Output current	20 mA max. (total sum of 4 terminals)	
	Output breakdown voltage [V]	6.5	
	No. of connectable fans	Up to 4 fans	
Control functions(2)		Voltage control, Internal adjustment (variable resistor) control, External adjustment (variable resistor) control(3), Thermistor control(3)	
Mounting method		DIN rail mounting or screw mounting	
Mass [g]		110	
Material		Case: Plastic	

PCB type

Model no.		9PC8045D-V001	9PC8045D-R001	9PC8045D-T001	9PC8045D-V101	9PC8045D-R101	9PC8045D-T101
Size [mm]		80 (H) × 45 (W) × 17 (D)					
Rated voltage [V]		12/24/48					
Power consumption [W]		0.2(1)					
Operating temperature [˚C]		-20 to +70					
Input terminal	Input voltage range [V] (V+, V-)	7 to 60					
	Control voltage range [V]	0 to 5.5					
Output terminal	PWM signal output	V_{OH} (high level voltage): 3.3 or 5 VDC selectable					
	PWM frequency [kHz]	25			1		
	Output current	20 mA max. (total sum of 4 terminals)					
	Output breakdown voltage [V]	6.5					
	No. of connectable fans	Up to 4 fans					
Control functions		Voltage control	Variable resistor control(3)	Thermistor control(3)	Voltage control	Variable resistor control(3)	Thermistor control(3)
Mounting method		Screw mounting					
Mass [g]		27					
Material		PCB: FR-4					

(1) When output terminals are turned on. (2) Control functions are mutually exclusive for Box type.
(3) Variable resistor and thermistor are not supplied with the controller and need to be prepared separately.
Note: Be noted that if applied input voltage or frequency is out of range of the connected fan, how the fan speed responds to the PWM duty cycle may be altered.

Front View (component names)

- Box type

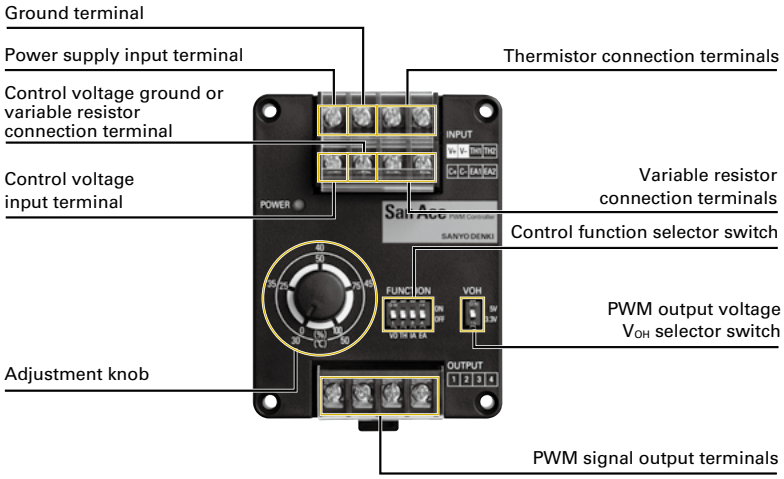

- PCB type

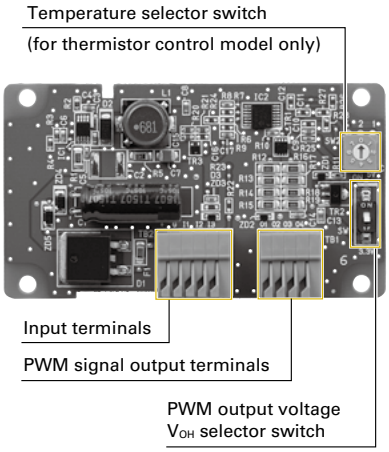

Connection Examples and PWM Signal Output Characteristics

Controller can be common-powered by the power supply for 12, 24, and 48 VDC rated voltage fans.
It can also be powered by a separate supply as long as both supplies share the same ground.

Voltage control

Output duty cycle controlled with input voltage of 0 to 5 VDC. *Ensure that the input voltage does not exceed 5.5 VDC.

- Box type

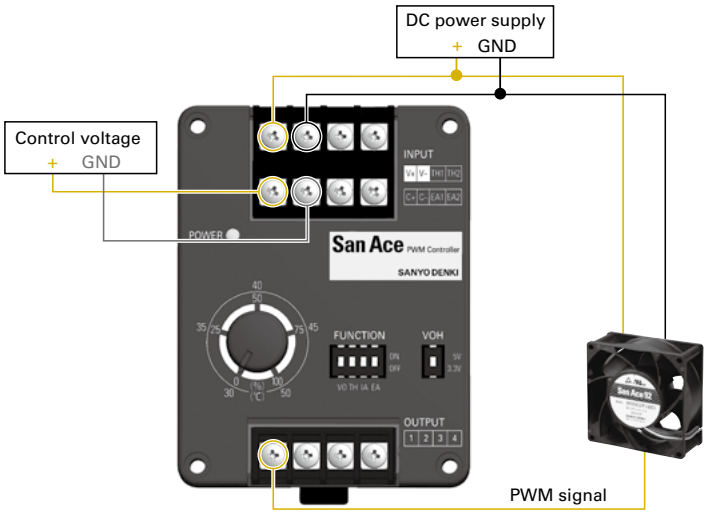

Control Voltage - Output Duty Cycle Characteristics

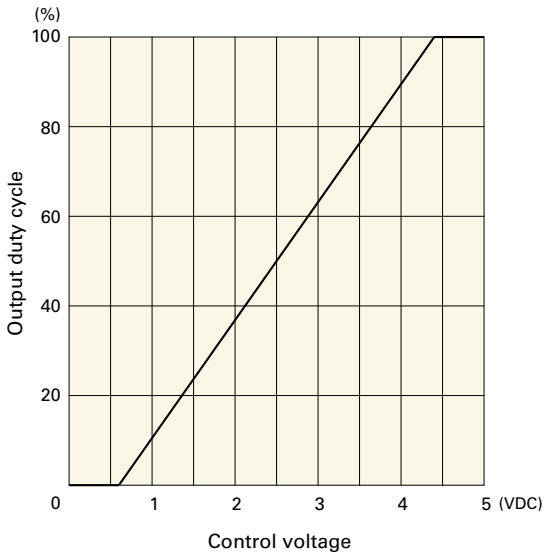

- PCB type (Model no.: 9PC8045D-V001)

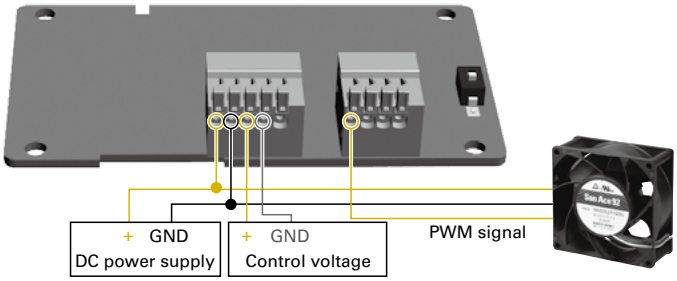

PWM Controller

Internal adjustment (variable resistor) control

Output duty cycle controlled with the adjustment knob.

- Box type

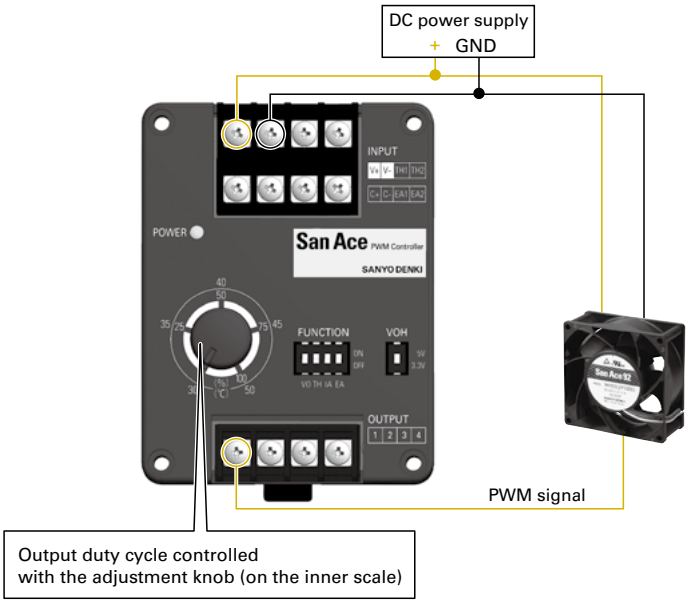

Inner Scale Reading -
Output Duty Cycle Characteristics

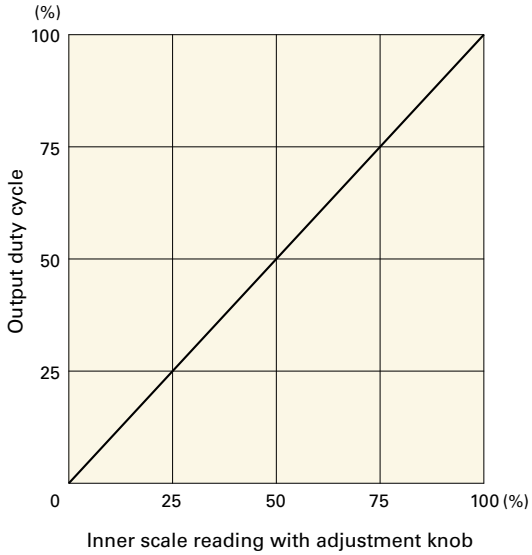

PWM Controller

External adjustment (variable resistor) control

Output duty cycle controlled with variable resistor connected to terminals.

- Box type

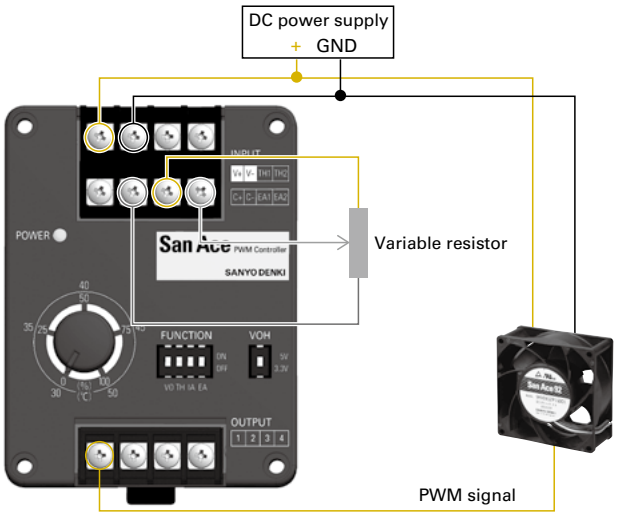

Resistance -
Output Duty Cycle Characteristics

Recommended total resistance: 10 kΩ
Resistance taper: B (linear curve fitting)

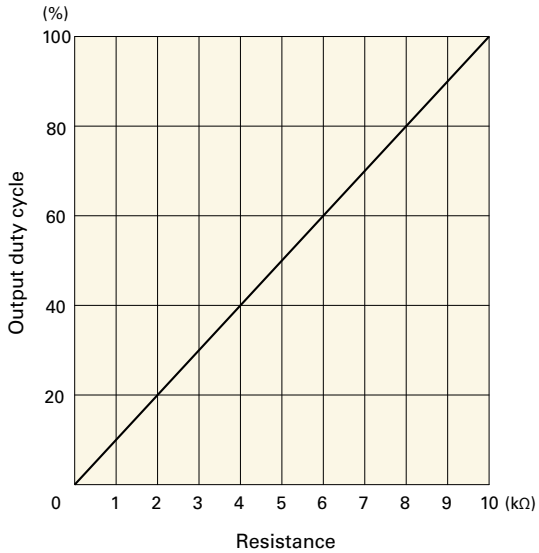

- PCB type (Model no.: 9PC8045D-R001)

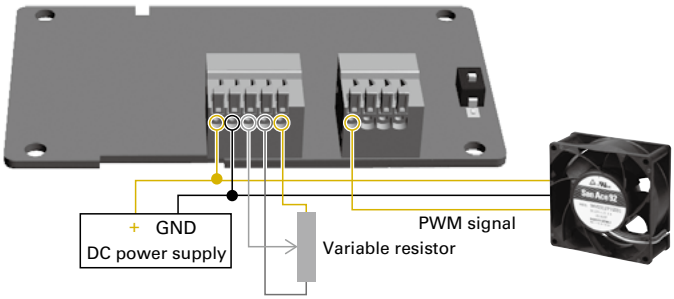

Thermistor control

Automation control of output duty cycle in response to the temperature detected with an external thermistor.

- Box type

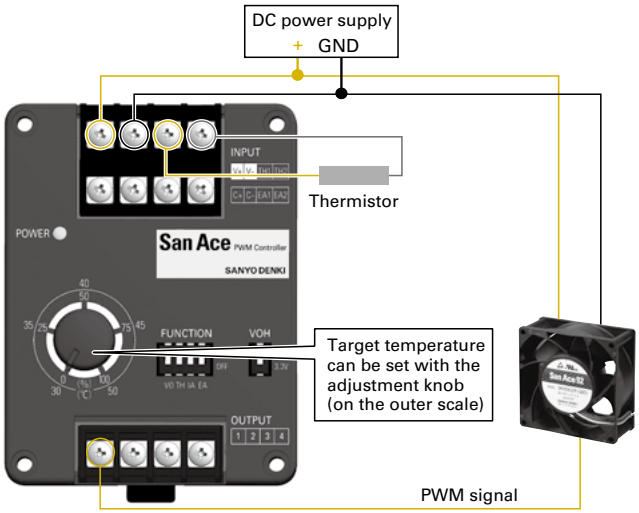

Controlling Conditions

T_{ST}: Temperature set with the adjustment knob (30 to 50°C)
T_{TH}: Temperature detected with thermistor

Recommended thermistor conditions
Type: NTC
R_{25} (Resistance at 25°C): 10 kΩ
B value: $B_{25/85}$ = 3435 K

Temperature conditions	Duty cycle	Fan rotational speed (For reference)
$T_{ST} < T_{TH}$	Increases	Increases
$T_{ST} > T_{TH}$	Decreases	Decreases
$T_{ST} \approx T_{TH}$	Maintained	Maintained

- PCB type (Model no.: 9PC8045D-T001)

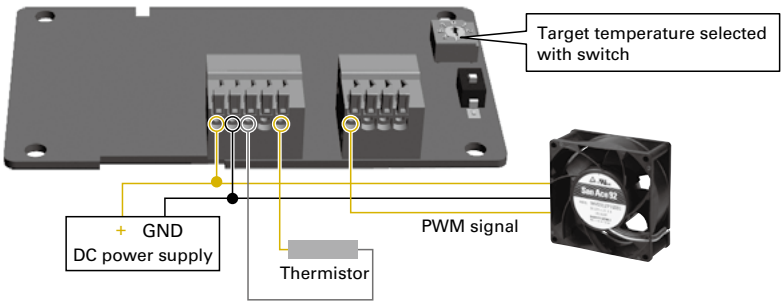

Dimensions (unit: mm)

- Box type

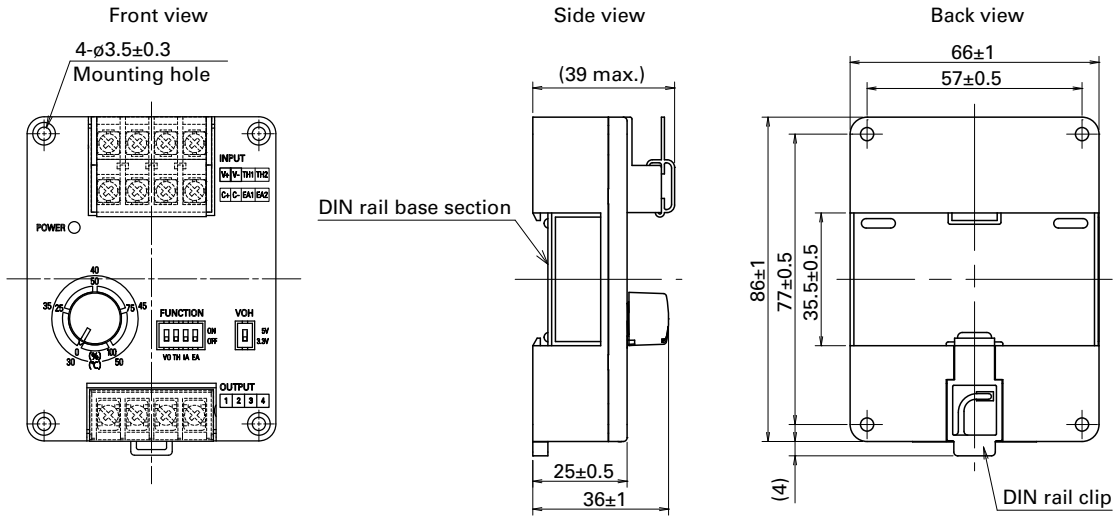

- PCB type

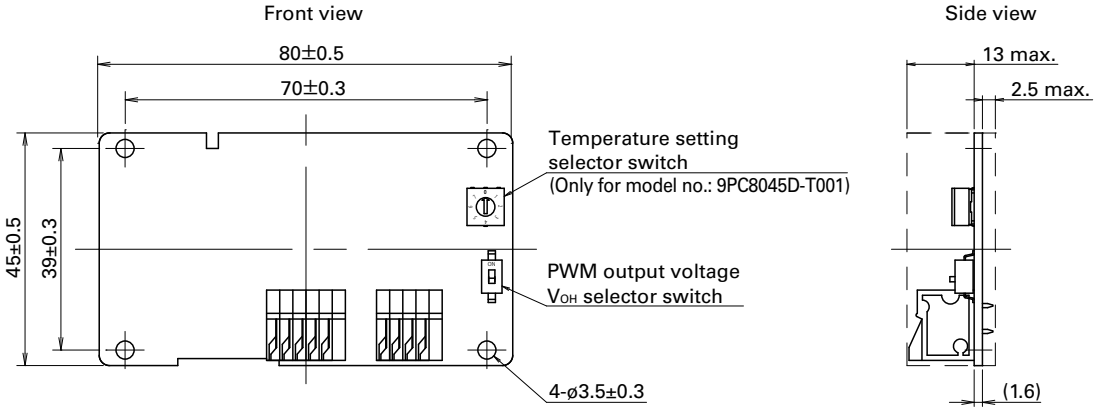

Airflow Tester

Features (Patented as a movable measurement device for measuring device airflow and system impedance)

Enables the selection of the optimal fan for a device

An optimal fan for a device can be selected by entering accurate measurement results into thermal design simulation software.

Compact and lightweight

With a compact design and weight of approximately 6 kg, it is portable enough to measure immobile equipment.

Measurement Functions

- System Impedance — Measurement of the resistance to the flow of air within a device
- Operating Airflow — Measurement of the actual airflow that passes through a device when a fan is mounted
- P-Q Performance — Measurement of airflow versus static pressure characteristics*

* Performance curve that illustrates the characteristics of a fan for use within a certain system.
It shows the relationship between airflow and static pressure.

With connection duct mounted

Specifications

Model no.		9AT2560S-000□(1)	9AT2560A-000□(1)	9AT2560C-000□(1)
Measurement units	Airflow	m^3/min	CFM	CFM
	Static pressure	Pa	inchH_2O	Pa
Measurement range	Airflow	0.20 to 8.00 m^3/min (Resolution: 0.01 m^3/min)	7 to 282 CFM (Resolution: 1 CFM)	7 to 282 CFM (Resolution: 1 CFM)
	Static pressure	0 to 999 Pa (Resolution: 1 Pa)	0 to 4.01 inchH_2O (Resolution: 0.01 inchH_2O)	0 to 999 Pa (Resolution: 1 Pa)
Measurement accuracy	Airflow	±7% of maximum measurable airflow with each nozzle		
	Static pressure	±10 Pa (0.04 inchH_2O) for measurement results < 200 Pa, ±50 Pa (0.20 inchH_2O) for measurement results ≥ 200 Pa		
Operating environment	Ambient temperature	0 to 40˚C		
	Humidity	20 to 85% RH (non-condensing)		
Display		Data no., Measurement values (airflow, static pressure(2)), Measurement status, Nozzle selection, Measurement mode selection		
Interface		Digital output: Included USB serial adapter		
Power supply	Input voltage	100 to 240 VAC, 50/60 Hz		
	Power consumption	260 VA max.		
Dimensions		600 (W) × 250 (H) × 250 (D) mm		
Mass		Main unit: Approx. 6 kg, Connection duct (including board holder): Approx. 1.5 kg		
Included peripherals		1 Set of measurement nozzles, Plastic mounting board (5 pcs / set), Connection duct, AC power cable (2.5 m), USB serial adapter, Instruction manual, Quick start guide, Data viewer software		

(1) The AC power plug shape differs with the number in □ of model numbers.
AC power plug included in models with 1 in □ is for Japan and North America regions (2 parallel flat pins + a round grounding pin), Input voltage: 100/120 VAC, 50/60 Hz
AC power plug included in models with 2 in □ is for Europe region (2 round pins + a female grounding contact), Input voltage: 220 VAC, 50 Hz
AC power plug included in models with 3 in □ is for China region (2 angled flat pins + a flat grounding pin), Input voltage: 220 VAC, 50 Hz
Product also available without an AC power cable. Model no. 9AT2560S-0000, 9AT2560A-0000, 9AT2560C-0000
(2) Static pressure values are calculated with standard atmosphere as 1013 hPa at 20˚C.

Airflow Tester Part Names

Top view

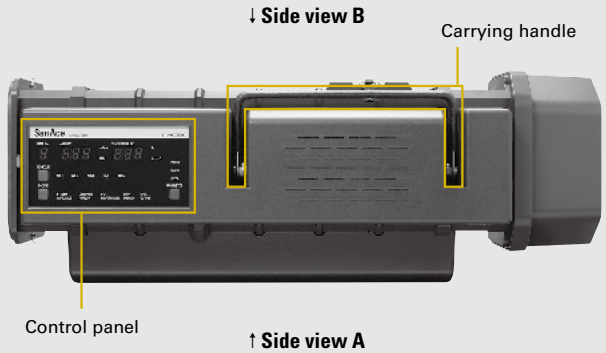

Front view (air inlet side)

Side view A

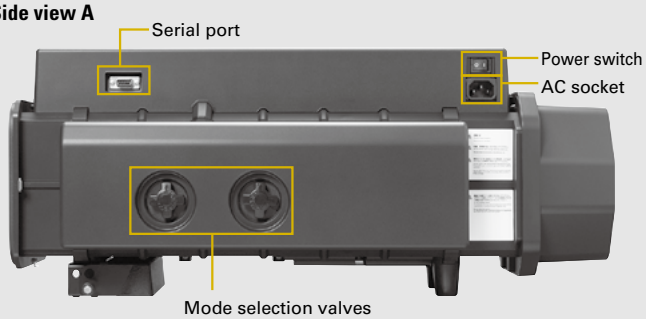

Back view (air outlet side)

Side view B

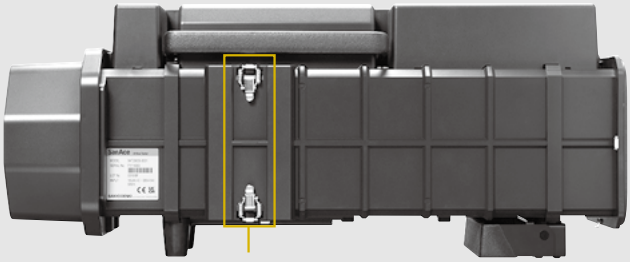

Control panel (zoomed in)

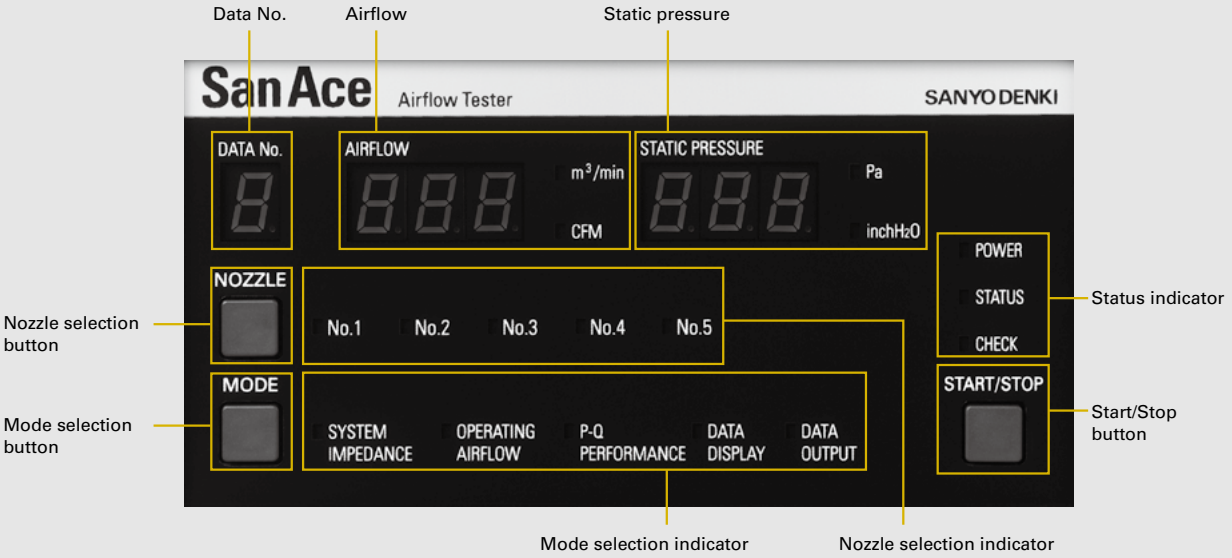

Usage Examples

Cut out a hole in the mounting board matching the vent opening of the device to be measured, and place the mounting board firmly against the device to perform measurements.

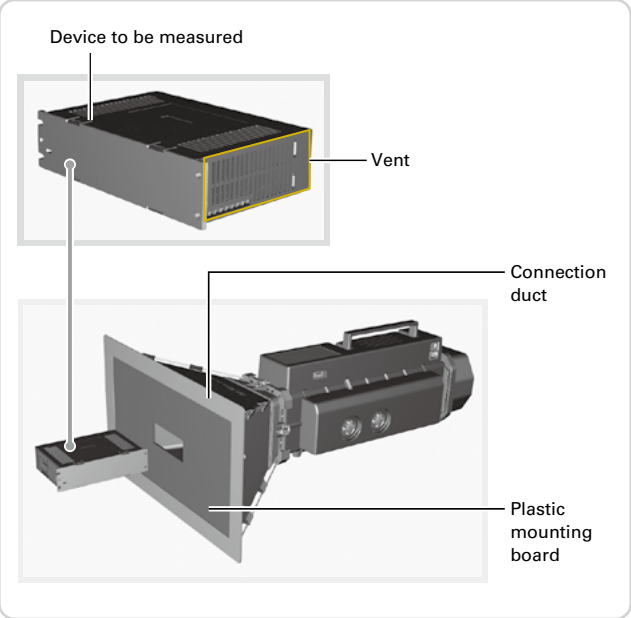

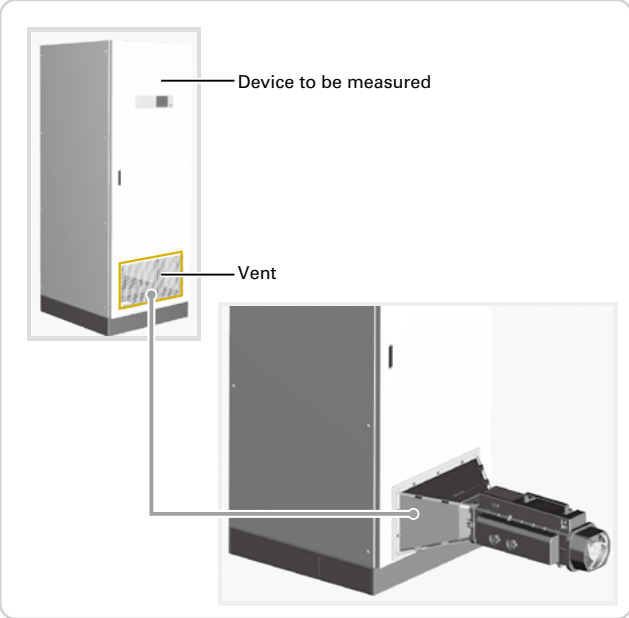

Data Viewer Software (included)

Obtained measurement data can be represented as a graph and saved on a PC.

Screen examples P-Q performance shown below based on catalog data.

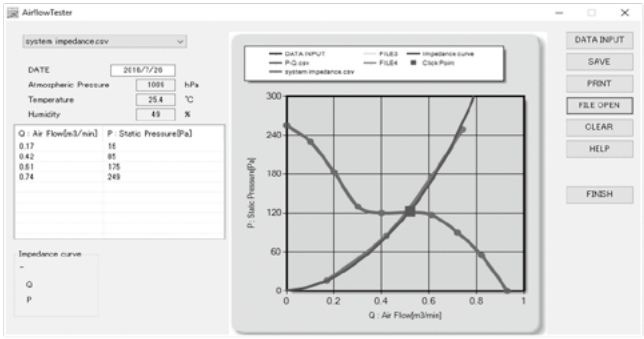

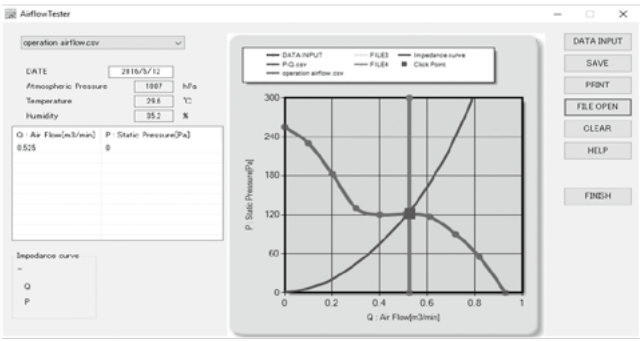

Option

Carrying case

Measurement nozzle case included

Model no.	9AT2560-B001 Please add "CS" to the end of the model no. of Airflow Tester in page 1 when ordering Airflow Tester and carrying case as a set. e.g. 9AT2560S-0001CS
Dimensions	705 (W) × 385 (H) × 415 (D) mm

Plastic mounting boards

Sized to fit the duct frame. Five boards included with Airflow Tester.

Model no.	9AT2560-P001
Quantity	5 pcs / set
Dimensions	525 (W) × 275 (H) × 4 (D) mm

Carrying case, measurement nozzle case

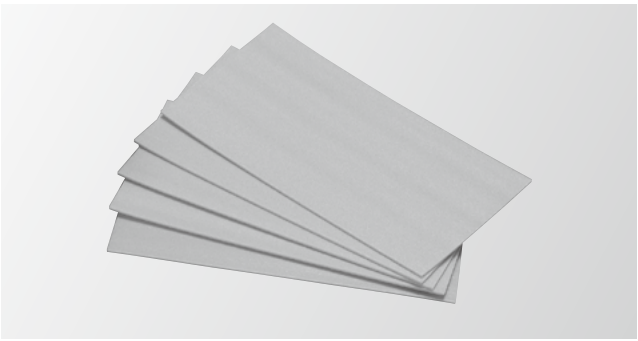

Plastic mounting boards (5 pcs)

Dimensions (unit: mm)

- Main unit

Top view

↓ Side view B

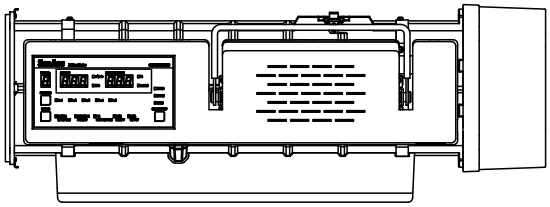

Airflow direction

↑ Side view A

Front view (air inlet side)

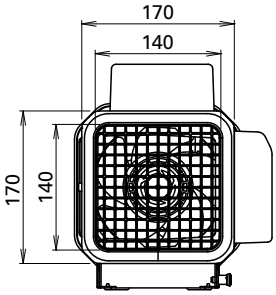

Side view A

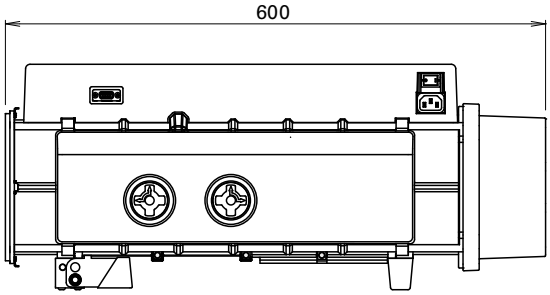

Back view (air outlet side)

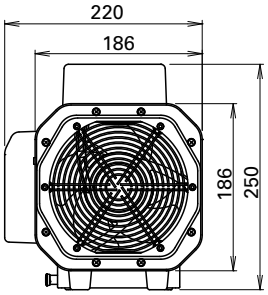

Bottom view

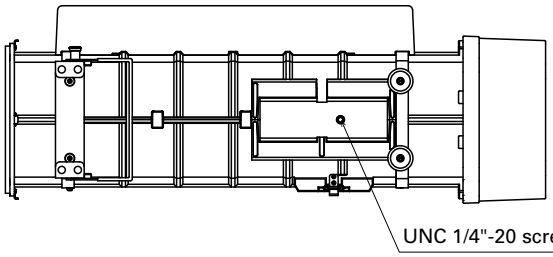

Side view B

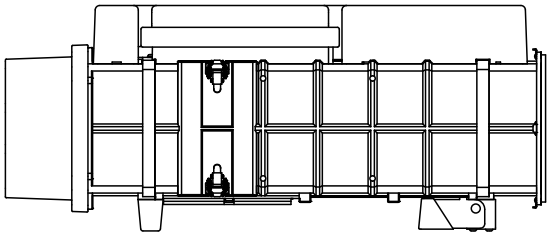

- Connection duct

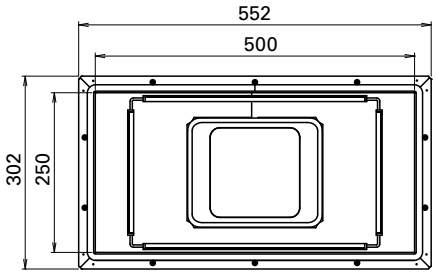

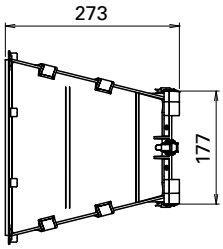

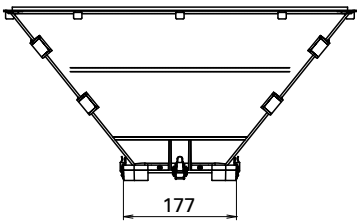

Cooling Fan Units CUSTOMIZED PRODUCTS

Features

We manufacture custom fan units tailored to the specification and requirements of your equipment. For details such as custom conditions, contact us.

■Example

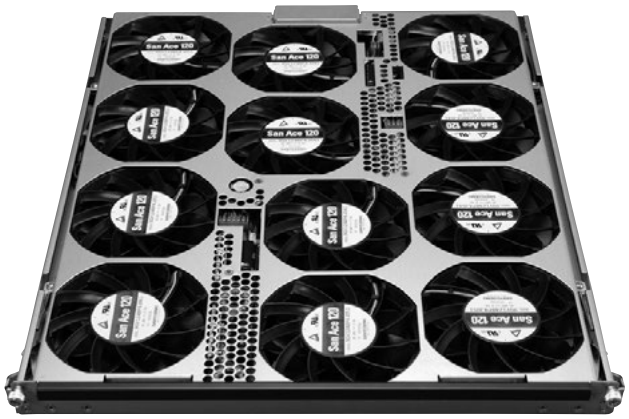

Electrolytic Corrosion Proof Fans CUSTOMIZED PRODUCTS → p. 618

Features

This cooling fan prevents electrolytic corrosion of bearings even under conditions where electromagnetic noise is generated.
Electrolytic corrosion of ball bearings is prevented by using ceramic balls in ball bearings. The ceramic material is an insulating material.
Manufacturable to meet specifications of all San Ace series fans.

Finger guards List

Increases safety by preventing foreign objects from entering fans. Fans can be used with little effect on airflow and static pressure.

Size	Model no.	Mounting side	Surface treatment	
			Nickel-chrome plating (silver)	Cation electropainting (black)
36 mm sq. type	109-1050	Inlet side, Outlet side	✓	–
38 mm sq. type	109-1065	Inlet side, Outlet side	✓	–
40 mm sq. type	109-059	Inlet side, Outlet side	✓	–
	109-059H		–	✓
52 mm sq. type	109-1156 (1)	Inlet side, Outlet side	✓	–
	109-149E (2)		✓	–
60 mm sq. type	109-139E	Inlet side, Outlet side	✓	–
	109-139H		–	✓
70 mm sq. type, Ø70 mm type	109-1128	Inlet side, Outlet side	✓	–
80 mm sq. type	109-049E	Inlet side, Outlet side	✓	–
	109-049H		–	✓
Ø92 mm type	109-1147	Impeller side, Nameplate side	✓	–
92 mm sq. type, Ø100 mm type	109-099E	Inlet side, Outlet side	✓	–
	109-099H		–	✓
120 mm sq. type	109-019E	Inlet side, Outlet side	✓	–
	109-019K		–	✓
127 mm sq. type, Ø175 mm type, Ø190 mm type	109-722	Inlet side, Outlet side	✓	–
	109-722H		–	✓
Ø133 mm type	109-1112	Inlet side	✓	–
	109-1112H		–	✓
Ø136 mm type	109-1139	Impeller side, Nameplate side	✓	–
140 mm sq. type	109-719	Inlet side, Outlet side	✓	–
	109-719H		–	✓
150 mm sq. type	109-1051	Inlet side, Outlet side	✓	–
Ø150 mm type	109-1104	Inlet side	✓	–
	109-1104H		–	✓
160 mm sq. type	109-619E	Inlet side, Outlet side	✓	–
	109-619H		–	✓
Ø172 mm Sidecut type	109-1155	Inlet side, Outlet side	✓	–
	109-319J		✓	–
Ø172 mm Sidecut, Round type	109-319E	Inlet side, Outlet side	✓	–
	109-319H		–	✓
Ø172 mm Round type	109-1066	Inlet side, Outlet side	✓	–
Ø200 mm type	109-1102 (3)	Inlet side, Outlet side	✓	–
	109-1102H (3)		–	✓
	109-720		✓	–
	109-720H		–	✓
Ø221 mm type	109-1138	Inlet side	✓	–
	109-1138H		–	✓
Ø225 mm type	109-1137	Inlet side	✓	–
	109-1137H		–	✓
Ø250 mm type	109-1152	Inlet side	✓	–
	109-1152H		–	✓
270 mm sq. type (for Bracket-mounted Centrifugal Fan)	109-1146	Inlet side	✓	–
	109-1146H		–	✓

(1) Applicable model no.: 9GA05* (2) Applicable model no.: 109P05* (3) Applicable model no.: 9GV20*

Finger guards Dimensions (unit: mm)

For use in environments subject to water splashes, cation electroplating models are recommended.

36 mm sq. type

Model no.	Surface treatment	Mass (g)
109-1050	Nickel-chrome plating (silver)	4

Inlet side, Outlet side

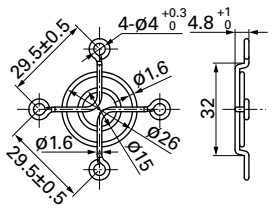

38 mm sq. type

Model no.	Surface treatment	Mass (g)
109-1065	Nickel-chrome plating (silver)	5

Inlet side, Outlet side

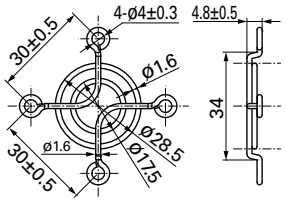

40 mm sq. type

Model no.	Surface treatment	Mass (g)
109-059	Nickel-chrome plating (silver)	7
109-059H	Cation electropainting (black)	

Inlet side, Outlet side

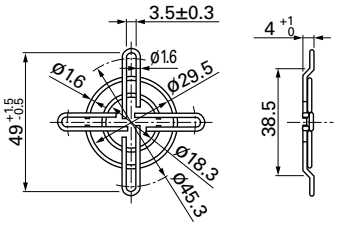

52 mm sq. type

Model no.	Surface treatment	Mass (g)
109-1156	Nickel-chrome plating (silver)	9.1
Applicable model no.		
9GA05*		

Inlet side, Outlet side

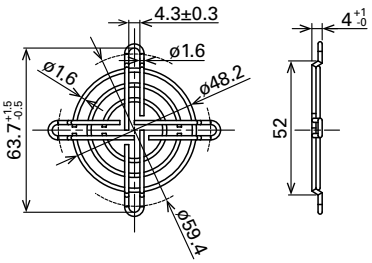

109-149E

Model no.	Surface treatment	Mass (g)
109-149E	Nickel-chrome plating (silver)	9
Applicable model no.		
109P05*		

Inlet side, Outlet side

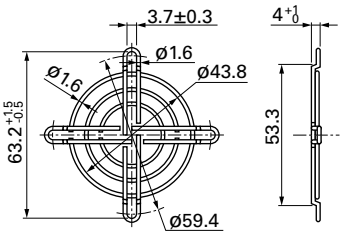

60 mm sq. type

Model no.	Surface treatment	Mass (g)
109-139E	Nickel-chrome plating (silver)	14.5
109-139H	Cation electropainting (black)	

Inlet side, Outlet side

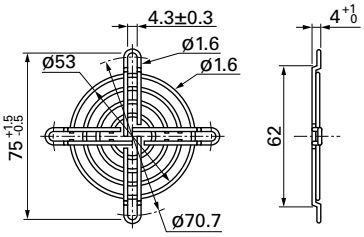

70 mm sq. type, ø70 mm type

Model no.	Surface treatment	Mass (g)
109-1128	Nickel-chrome plating (silver)	17

Inlet side, Outlet side

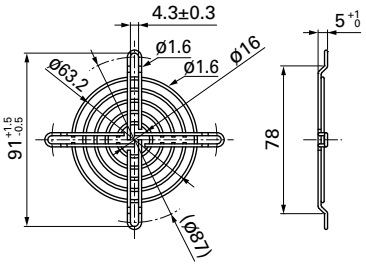

80 mm sq. type

Model no.	Surface treatment	Mass (g)
109-049E	Nickel-chrome plating (silver)	21
109-049H	Cation electropainting (black)	

Inlet side, Outlet side

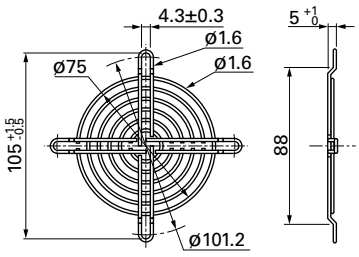

ø92 mm type

Model no.	Surface treatment	Mass (g)
109-1147	Nickel-chrome plating (silver)	23

Impeller side, Nameplate side

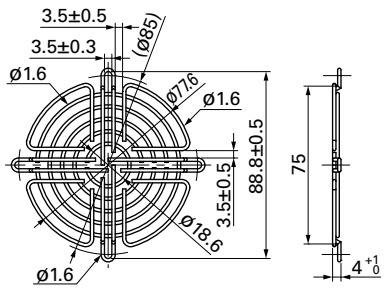

Option

Finger guards Dimensions (unit: mm)

For use in environments subject to water splashes, cation electroplating models are recommended.

92 mm sq., ø100 mm type

Model no.	Surface treatment	Mass (g)
109-099E	Nickel-chrome plating (silver)	29
109-099H	Cation electropainting (black)	

Inlet side, Outlet side

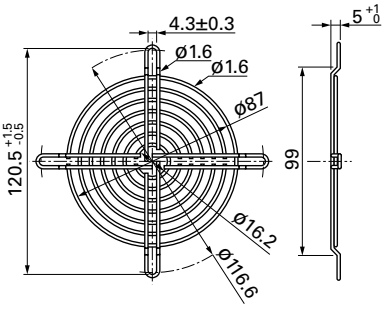

120 mm sq. type

Model no.	Surface treatment	Mass (g)
109-019E	Nickel-chrome plating (silver)	42
109-019K	Cation electropainting (black)	

Inlet side, Outlet side

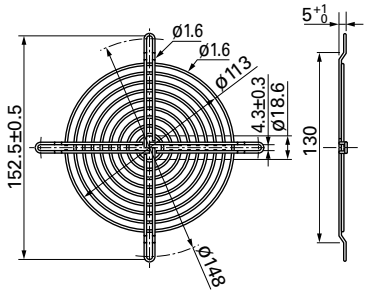

127 mm sq., ø175 mm, ø190 mm type

Model no.	Surface treatment	Mass (g)
109-722	Nickel-chrome plating (silver)	43
109-722H	Cation electropainting (black)	

Inlet side, Outlet side

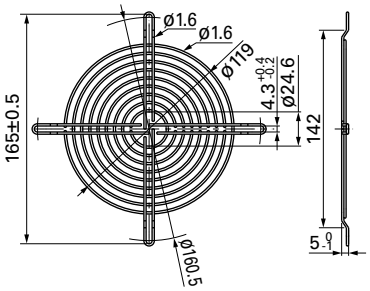

ø133 mm type

Model no.	Surface treatment	Mass (g)
109-1112	Nickel-chrome plating (silver)	65
109-1112H	Cation electropainting (black)	

Inlet side

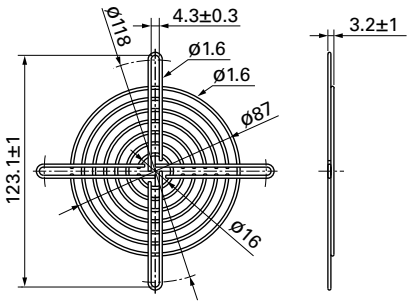

ø136 mm type

Model no.	Surface treatment	Mass (g)
109-1139	Nickel-chrome plating (silver)	41

Impeller side, Nameplate side

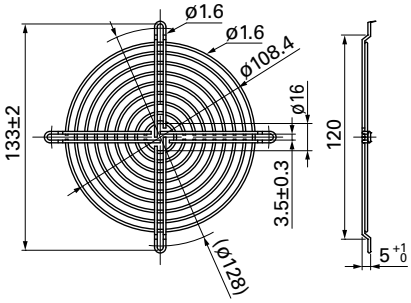

140 mm sq. type

Model no.	Surface treatment	Mass (g)
109-719	Nickel-chrome plating (silver)	51
109-719H	Cation electropainting (black)	

Inlet side, Outlet side

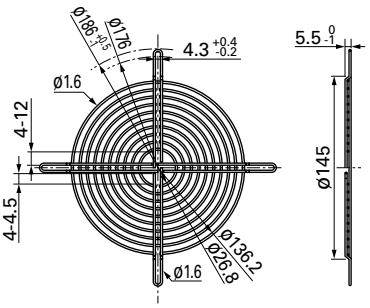

150 mm sq. type

Model no.	Surface treatment	Mass (g)
109-1051	Nickel-chrome plating (silver)	63

Inlet side, Outlet side

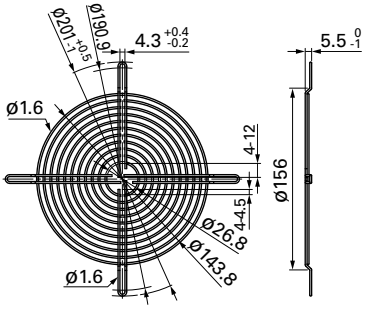

ø150 mm type

Model no.	Surface treatment	Mass (g)
109-1104	Nickel-chrome plating (silver)	31
109-1104H	Cation electropainting (black)	

Inlet side

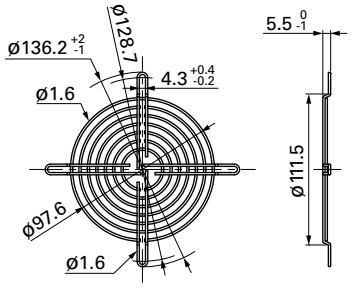

160 mm sq. type

Model no.	Surface treatment	Mass (g)
109-619E	Nickel-chrome plating (silver)	85
109-619H	Cation electropainting (black)	

Inlet side, Outlet side

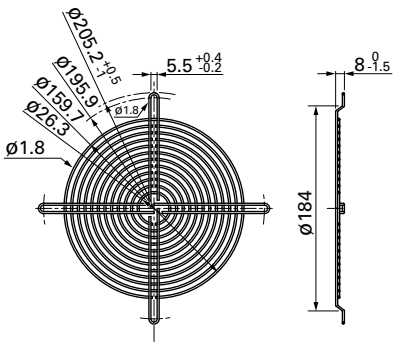

Option

Finger guards Dimensions (unit: mm)

For use in environments subject to water splashes, cation electroplating models are recommended.

ø172 mm Sidecut type

Model no.	Surface treatment	Mass (g)
109-1155	Nickel-chrome plating (silver)	74
Applicable model no.		
9HV57*/9SG57*/9GV57*/9CR57*/ 9WG57*/9GP57*/9AD57*/9ADW57*		

Mount the 109-1155 finger guard to a fan using four holes as shown below.

Inlet side, Outlet side

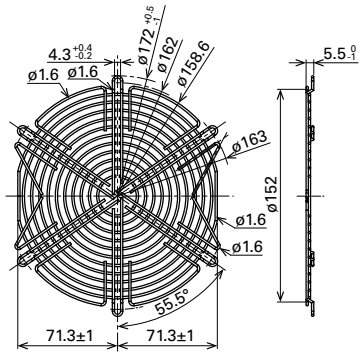

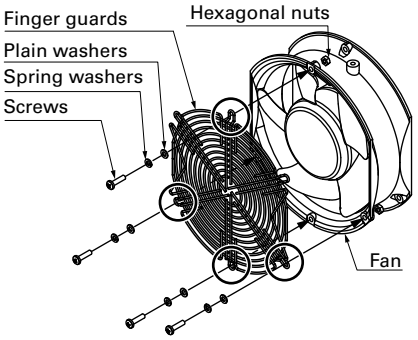

●No nuts or screws for use in attachment included.

ø172 mm Sidecut type

Model no.	Surface treatment	Mass (g)
109-319J	Nickel-chrome plating (silver)	65
Applicable model no.		
109E47*/109E57*/109L57*/109S30*		

Mount the 109-319J finger guard to a fan using two holes as shown below.

Inlet side, Outlet side

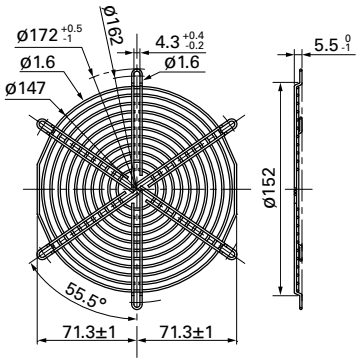

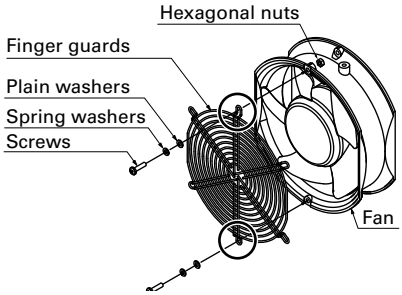

●No nuts or screws for use in attachment included.

ø172 mm Sidecut, Round type

Model no.	Surface treatment	Mass (g)
109-319E	Nickel-chrome plating (silver)	69
109-319H	Cation electropainting (black)	

Mount the 109-319E/109-319H finger guard to a fan using two holes as shown below. They cannot be mounted otherwise.

Inlet side, Outlet side

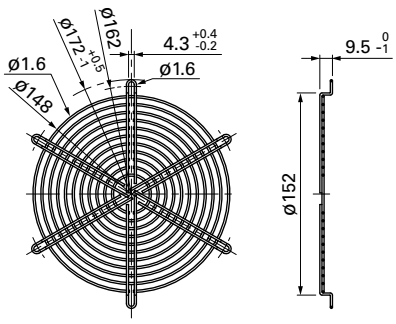

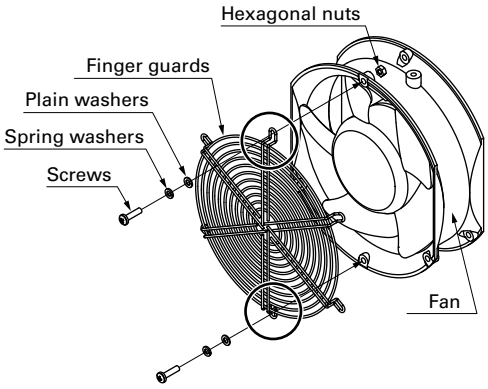

●No nuts or screws for use in attachment included.

ø172 mm Round type

Model no.	Surface treatment	Mass (g)
109-1066	Nickel-chrome plating (silver)	61

Inlet side, Outlet side

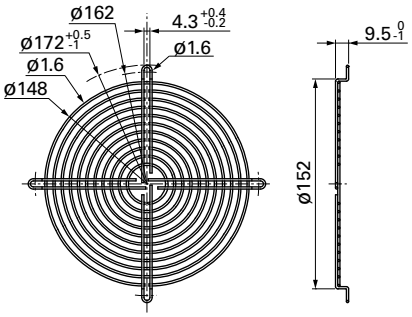

Option

Finger guards Dimensions (unit: mm)

For use in environments subject to water splashes, cation electroplating models are recommended.

ø200 mm type

Model no.	Surface treatment	Mass (g)	Applicable model no.
109-1102	Nickel-chrome plating (silver)	100	9GV20*
109-1102H	Cation electropainting (black)		

Model no.	Surface treatment	Mass (g)	Applicable model no.
109-720	Nickel-chrome plating (silver)	84	9EC20*
109-720H	Cation electropainting (black)		

Inlet side, Outlet side

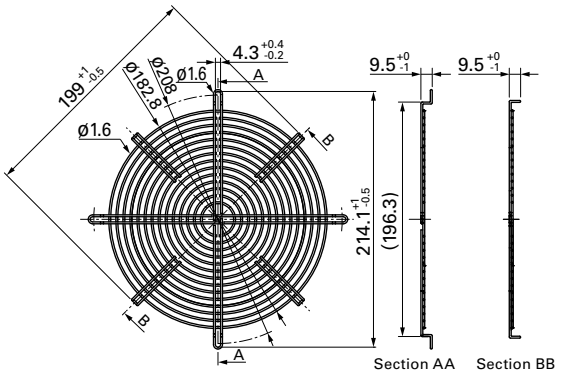

Inlet side, Outlet side

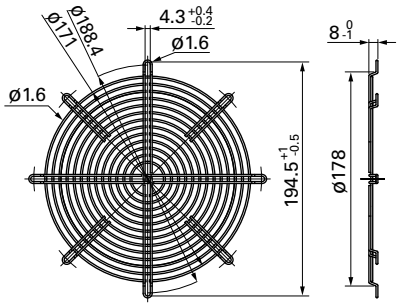

ø221 mm type

Model no.	Surface treatment	Mass (g)
109-1138	Nickel-chrome plating (silver)	105
109-1138H	Cation electropainting (black)	

Inlet side

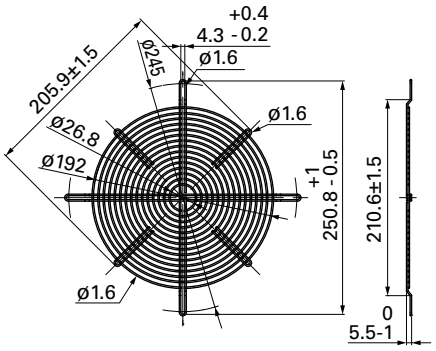

ø225 mm type

Model no.	Surface treatment	Mass (g)
109-1137	Nickel-chrome plating (silver)	94
109-1137H	Cation electropainting (black)	

Inlet side

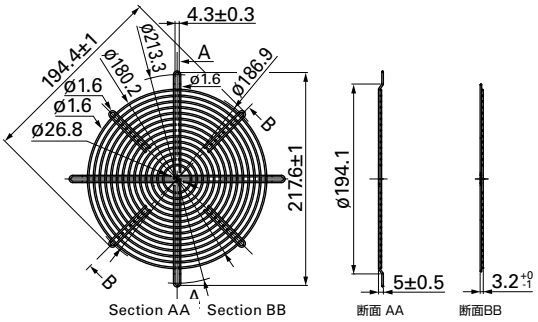

Option

Finger guards Dimensions (unit: mm)

For use in environments subject to water splashes, cation electroplating models are recommended.

ø250 mm type

Model no.	Surface treatment	Mass (g)
109-1152	Electro nickel plating (silver)	140
109-1152H	Cation electropainting (black)	

Inlet side

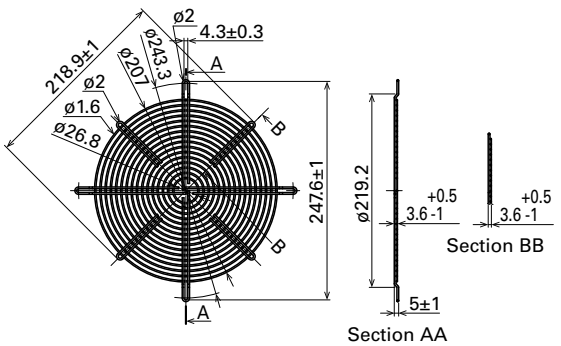

270 mm sq. type (for Bracket-mounted Centrifugal Fan)

Model no.	Surface treatment	Mass (g)
109-1146	Nickel-chrome plating (silver)	106
109-1146H	Cation electropainting (black)	

Finger guard 109-1146 and 109-1146H should be mounted with four holes as in the drawing.

Inlet side

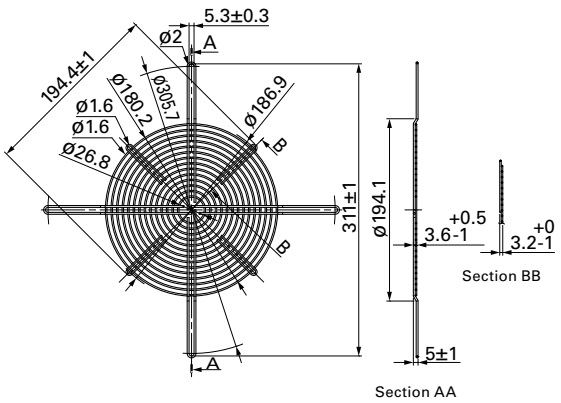

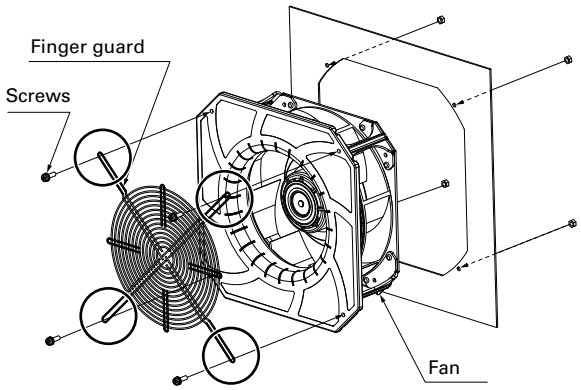

●No nuts or screws for use in attachment included.

Mounting example

Axial fan

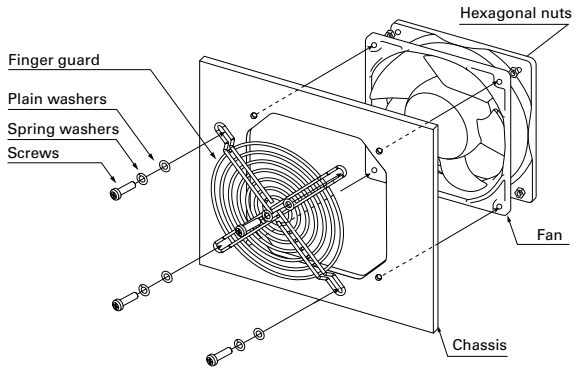

●No nuts or screws for use in attachment included.

Centrifugal fan

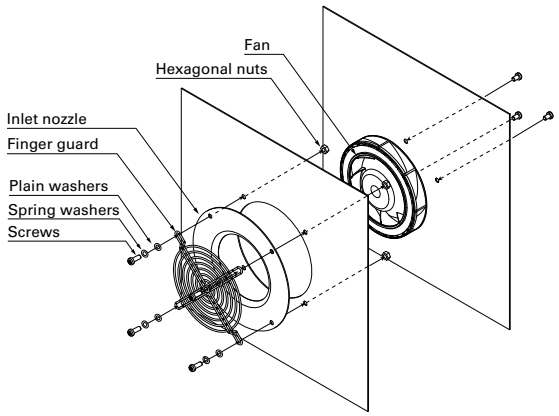

Option

Inlet nozzle for centrifugal fan and splash proof centrifugal fan Dimensions (unit: mm)

Nozzle mounted in fan inlet side to adjust the flow of introduced air. Material: Steel sheet
For use in environments subject to water splashes, cation electroplating models are recommended.

ø70 mm type

Model no.	Surface treatment	Mass (g)
109-1106	Electro nickel plating (silver)	40

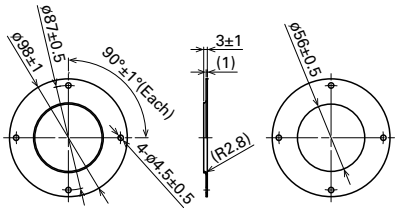

ø100 mm type

Model no.	Surface treatment	Mass (g)
109-1080	Electro nickel plating (silver)	80
109-1080H	Cation electropainting (black)	

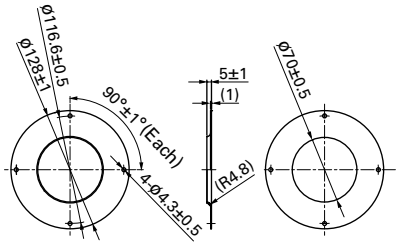

ø133 mm type

Model no.	Surface treatment	Mass (g)
109-1069	Electro nickel plating (silver)	76
109-1069H	Cation electropainting (black)	

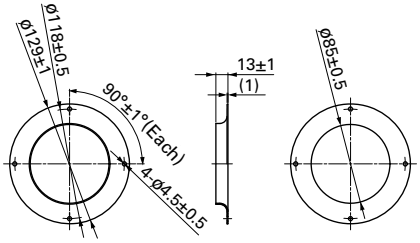

ø150 mm type

Model no.	Surface treatment	Mass (g)
109-1081	Electro nickel plating (silver)	70
109-1081H	Cation electropainting (black)	

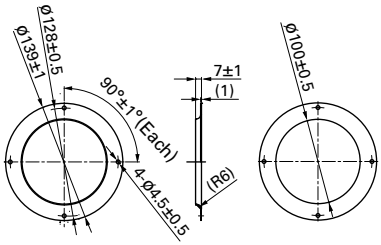

ø175 mm, ø190 mm type

Model no.	Surface treatment	Mass (g)
109-1073	Electro nickel plating (silver)	100
109-1073H	Cation electropainting (black)	

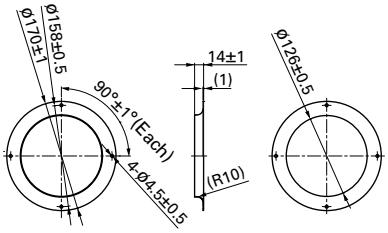

ø221 mm type

Model no.	Surface treatment	Mass (g)
109-1135	Electro nickel plating (silver)	230
109-1135H	Cation electropainting (black)	

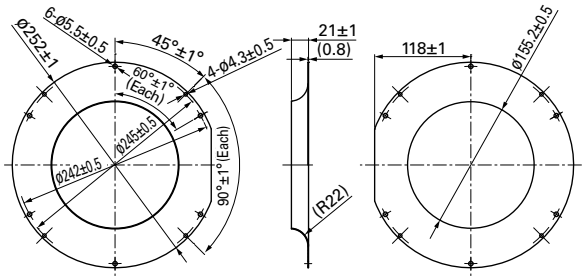

ø225 mm type

Model no.	Surface treatment	Mass (g)
109-1134	Electro nickel plating (silver)	360
109-1134H	Cation electropainting (black)	

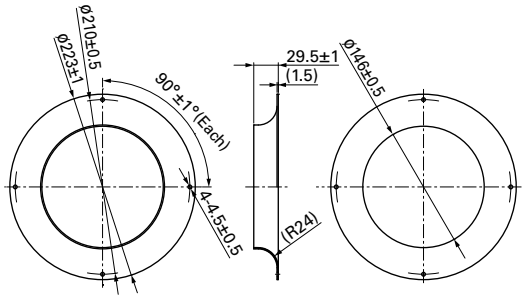

ø250 mm type

Model no.	Surface treatment	Mass (g)
109-1151	Electro nickel plating (silver)	440
109-1151H	Cation electropainting (black)	

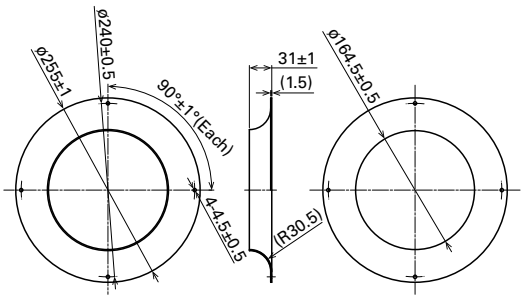

Option

EMC guards Dimensions (unit: mm)

It is a metallic piece that protects materials from the adverse effects of electromagnetic noise sources. It provides electromagnetic shielding. It is attached to the casing of a device by means of the fan fixing screw (s). Ground the devices equipped with an EMC guard.
Rust may occur if used in wet environments. Please refer to page 618 for detail.

80 mm sq. type

Model no.	Surface treatment	Mass (g)
109-1038	Nickel-chrome plating (silver)	14

Representative fans model numbers	Dimensions of fans (mm)
109P08*	80×80×20
9GV08*	80×80×38
9HV08*	
9HVA08*	
9HVB08*	

80 mm sq. type

Model no.	Surface treatment	Mass (g)
109-1039	Nickel-chrome plating (silver)	10

Representative fans model numbers	Dimensions of fans (mm)
9GA08*	80×80×20
9GA08*	80×80×25
9GA08*	80×80×32
9G08*	80×80×38
9GA08*	

92 mm sq. type

Model no.	Surface treatment	Mass (g)
109-1040	Nickel-chrome plating (silver)	15

Representative fans model numbers	Dimensions of fans (mm)
9G09*	92×92×32
9G09*	92×92×38
9GV09*	
9GA09*	
9AD09*	

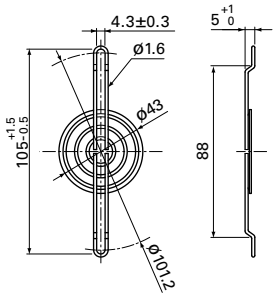

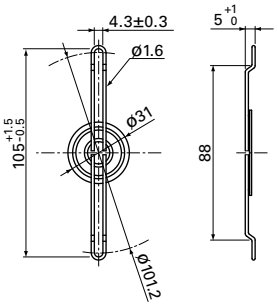

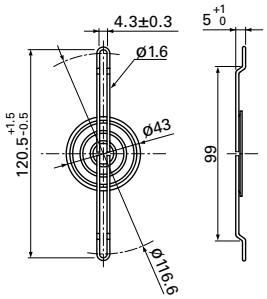

120 mm sq. type

Model no.	Surface treatment	Mass (g)
109-1037	Nickel-chrome plating (silver)	26

Representative fans model numbers	Dimensions of fans (mm)
9GV12*	120×120×25
9GL12*	120×120×38
9G12*	
9GV12*	
9HV12*	
9LG12*	
9AD12*	

ø172 mm type

Model no.	Surface treatment	Mass (g)
109-1036	Nickel-chrome plating (silver)	49

Representative fans model numbers	Dimensions of fans (mm)
109E47*	ø172×25
109L17*	ø172×51
9GV57*	
109E17*	
109E57*	
9SG57*	

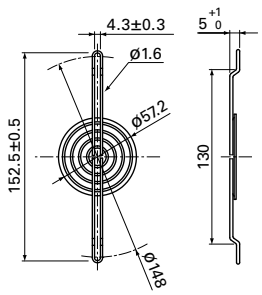

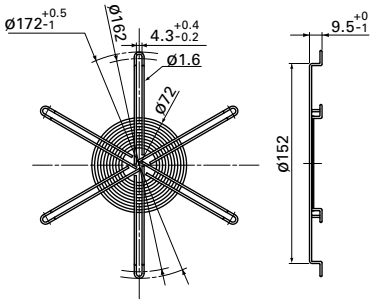

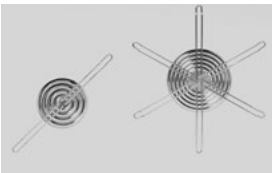

EMC guard

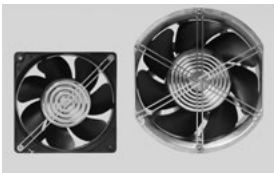

attached to a cooling fan

Option

Resin finger guards Dimensions (unit: mm)

Material Frame: Resin (PPE+PS) UL file no. E82268 94V-0

60 mm sq. type

Model no.	Mass (g)
109-1003G	7

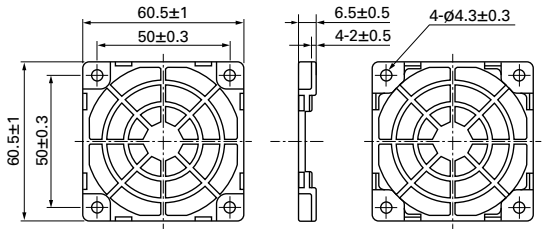

80 mm sq. type

Model no.	Mass (g)
109-1002G	10

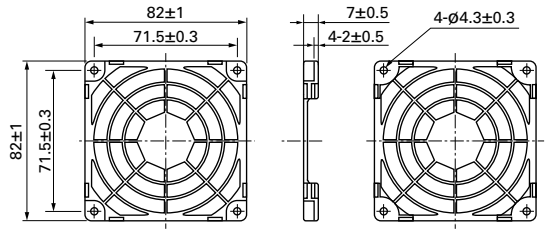

92 mm sq. type

Model no.	Mass (g)
109-1001G	12

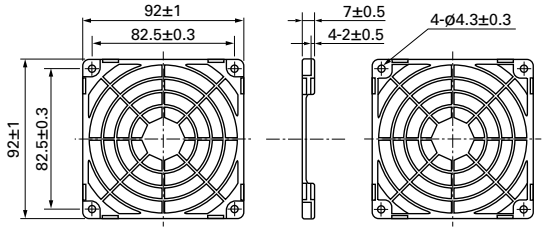

120 mm sq. type

Model no.	Mass (g)
109-1000G	23

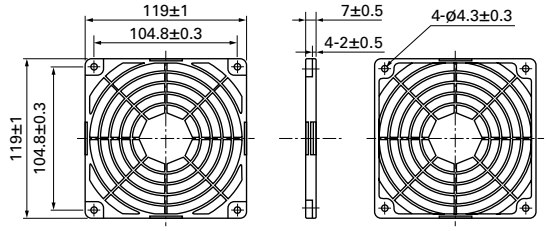

Airflow - Static pressure characteristics

Measured with our double chamber measuring device (120 mm sq. type)

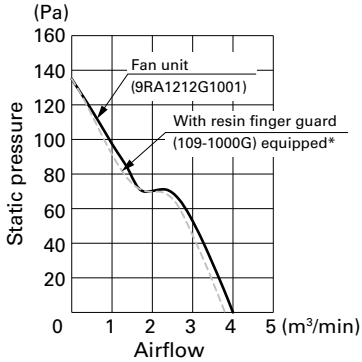

Applied voltage: 12 VDC
* Finger guard is attached on air inlet side of fan.

Mounting example

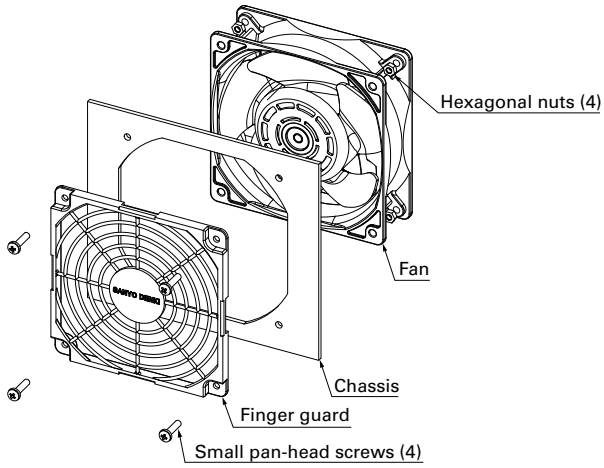

- Operating temperature limit is between -20 to +70˚C. (non-condensing)
- Plastic finger guards are placed on both the intake and exhaust sides of the fan.
- No nuts or screws for use in attachment included.

Resin filter kits Dimensions (unit: mm)

Material Guard, cover: Resin (PPE+PS) UL file no. E82268 94V-0 Filter: Polyurethane foam UL file no. E74916 (S) 94HF-1
PPI: Particles Per Inch Indicates the number of holes per inch. Note that the higher the number, the finer the grain of the sponge.

60 mm sq. type

Model no.	Mass (g)
109-1003F13 (13 PPI)	11
109-1003F20 (20 PPI)	
109-1003F30 (30 PPI)	
109-1003F40 (40 PPI)	

Replacement filter model no.	Quantity
109-1003M13 (13 PPI)	5
109-1003M20 (20 PPI)	
109-1003M30 (30 PPI)	
109-1003M40 (40 PPI)	

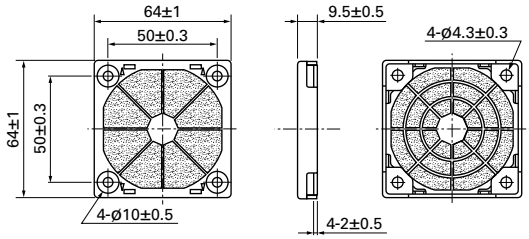

80 mm sq. type

Model no.	Mass (g)
109-1002F13 (13 PPI)	19
109-1002F20 (20 PPI)	
109-1002F30 (30 PPI)	
109-1002F40 (40 PPI)	

Replacement filter model no.	Quantity
109-1002M13 (13 PPI)	5
109-1002M20 (20 PPI)	
109-1002M30 (30 PPI)	
109-1002M40 (40 PPI)	

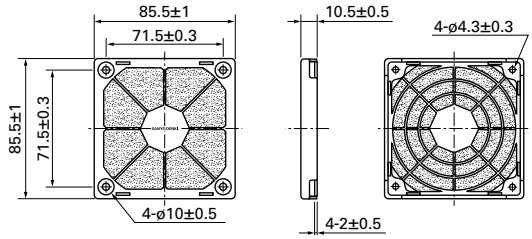

92 mm sq. type

Model no.	Mass (g)
109-1001F13 (13 PPI)	25
109-1001F20 (20 PPI)	
109-1001F30 (30 PPI)	
109-1001F40 (40 PPI)	

Replacement filter model no.	Quantity
109-1001M13 (13 PPI)	5
109-1001M20 (20 PPI)	
109-1001M30 (30 PPI)	
109-1001M40 (40 PPI)	

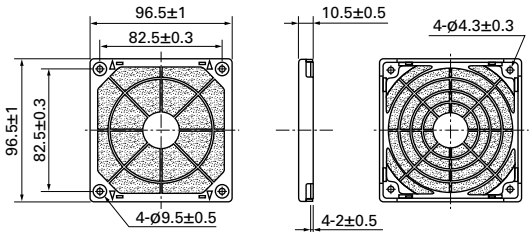

120 mm sq. type

Model no.	Mass (g)
109-1000F13 (13 PPI)	44
109-1000F20 (20 PPI)	
109-1000F30 (30 PPI)	
109-1000F40 (40 PPI)	

Replacement filter model no.	Quantity
109-1000M13 (13 PPI)	5
109-1000M20 (20 PPI)	
109-1000M30 (30 PPI)	
109-1000M40 (40 PPI)	

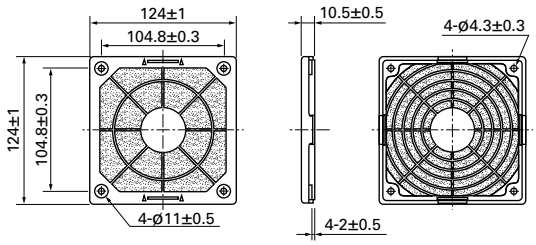

Option

Resin filter kits

Airflow - Static pressure characteristics

Measured with our double chamber measuring device (120 mm sq. type)

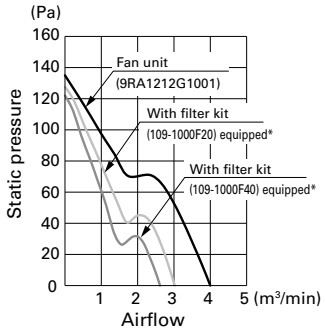

Applied voltage: 12 VDC
* Filter kit is attached on air inlet side of fan.

Mounting example

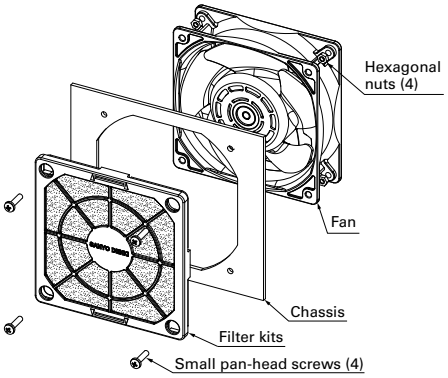

Filter replacement (example)

To replace the filter, remove the front cover of the filter kit.

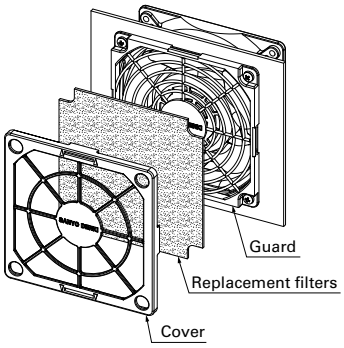

- Filter kit is one of the option to keep air in the chassis clean filtering dust in external atmosphere when pulling-air cooling is implemented. The filter kit is hooked up through mounting hole of fan frame with screw as well as finger guard. Some performances (airflow & static pressure) of the fan motor decreases when filter kit is hooked up.
- This Filter Kit is composed of 3 components, including a guard, a filter and a cover. It is delivered as a finished product at delivery, saving assembly time when mounting. It can be mounted by inserting a screw in the apertures of the cover.
- The filter and cover can be easily removed from the guard with one touch. There is no need for fan removal when undertaking maintenance. ● Operating temperature limit is between -10 to +60˚C. (non-condensing)
- The filter will deteriorate with age, and the level of deterioration will vary upon usage conditions. Please be aware that the filter has a greater tendency to deteriorate under high temperature and humidity. For long-term storage, please store under the temperature range of 10 to 30˚C, humidity range of 20 to 65%. Usage and storage period is approximately 2 years.
- Cooling ability decreases with filter contamination due to clogging. Filter replacement is recommended approximately every six months of usage. Please replace the filter if deterioration or clogging is seen at inspection.
- When replacing the filter, please use genuine SANYO DENKI filters. ●Do not water-wash the filter.
- Avoid use and storage under high temperature or humidity, direct sunlight or exposure to ultraviolet light, or in corrosive gas. ●No nuts or screws for use in attachment included.

Filter kits Applicable models: AC Fan 120×120×38 mm Dimensions, Reference Dimensions of Mounting Holes (unit: mm)

Neither filter kit can be installed on ACDC fans, or AC fans with sensors. Please evaluate it by assembly filter kits on the derice.

Model no.	Material	Mass (g)
109-018	Steel Wire Mesh: Stainless 16-mesh nets in 3 layers Cover: Resin Metal fittings: Steel (chromate-plated)	182

Dimensions

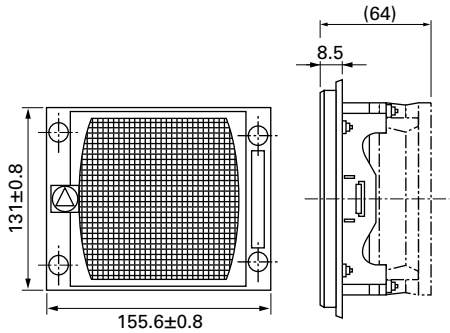

Airflow - Static Pressure Characteristics
(Measured with our double chamber measuring device)

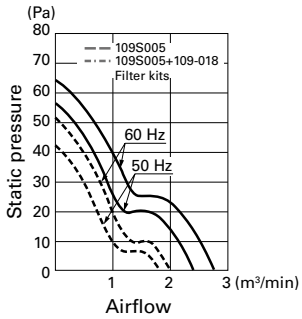

Reference Dimensions of Mounting Holes

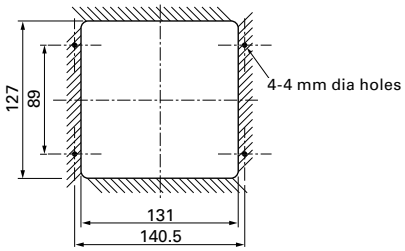

●The parts shown in the installation diagram (nuts, washers, and screws) are included.

Mounting Example

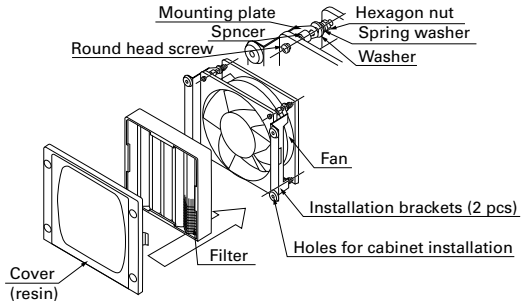

Screen kits Applicable models: AC Fan 120×120×38 mm Dimensions, Reference Dimensions of Mounting Holes (unit: mm)

Neither screen kit can be installed on ACDC fans, or AC fans with sensors.

Model no.	Material	Mass (g)
109-020	Steel Wire Mesh: Stainless 16-mesh nets in 1 layers Cover: Resin Metal fittings: Steel (chromate-plated)	135

Dimensions

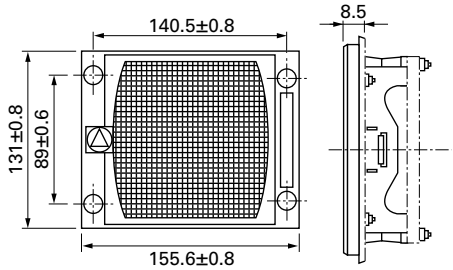

Airflow - Static Pressure Characteristics
(Measured with our double chamber measuring device)

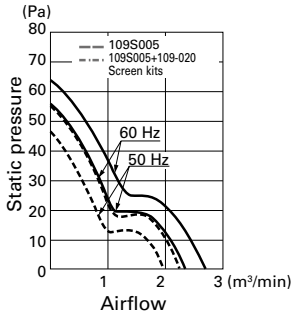

Reference Dimensions of Mounting Holes

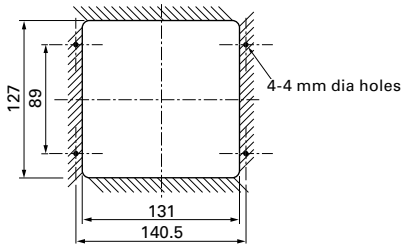

●The parts shown in the installation diagram (nuts, washers, and screws) are included.

Mounting Example

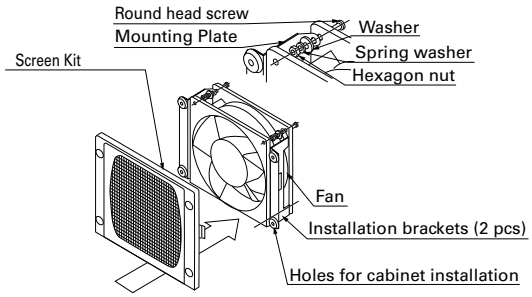

■PSE compatible models

For 80×80×42 mm

Model no.	Power cord length [L] (mm)	Mass (g)
489-008-L10	1000	30
489-008-L21	2100	61
489-008-L35	3500	99

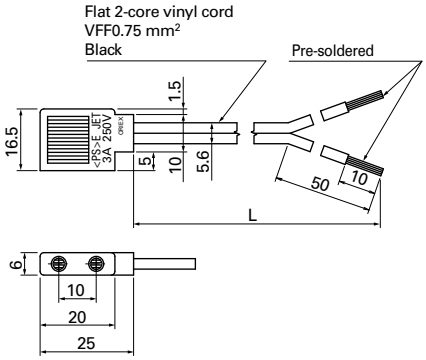

For 80×80×25 mm, 80×80×38 mm, 92×92×25 mm, 120×120×25 mm

Model no.	Power cord length [L] (mm)	Mass (g)
489-016-L10	1000	34
489-016-L21	2100	64

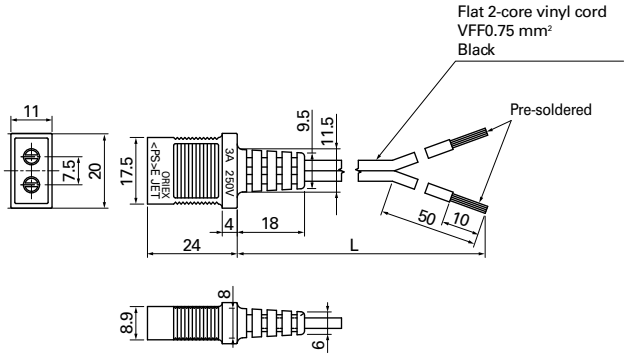

For 120×120×38 mm (not including ACDC fan)

Exclusive for fans without UL at the end of the model number.

Model no.	Power cord length [L] (mm)	Mass (g)
489-006-L10	1000	47
489-006-L21	2100	76
489-006-L35	3500	114

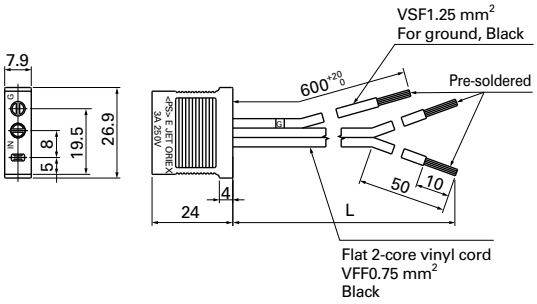

For 120×120×38 mm (not including ACDC fan)

Exclusive for fans with UL at the end of the model number.

Model no.	Power cord length [L] (mm)	Mass (g)
489-037-L10	1000	46
489-037-L21	2100	76
489-037-L35	3500	114

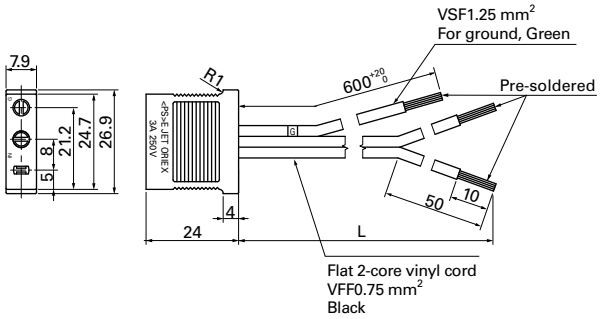

For ⌀172×51 mm, ⌀172×150×51 mm, 160×160×51 mm

Model no.	Power cord length [L] (mm)	Mass (g)
489-1619-L10	1000	34
489-1619-L21	2100	64

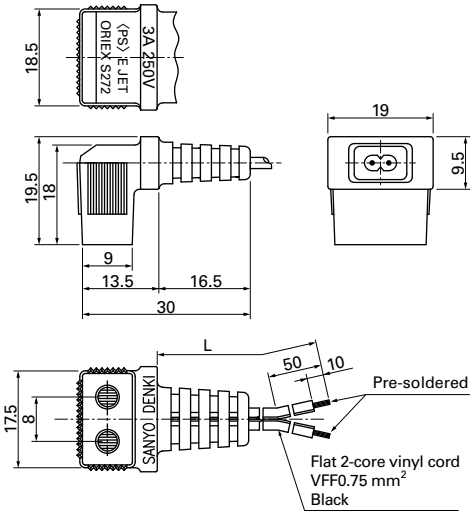

●Be careful not to damage the plug cord when taking them out of the package.

Option

Plug cord for AC fan Dimensions (unit: mm)

■UL/CSA certified models UL file no.: E50197 CSA file no.: LR67048

For 120×120×38 mm (not including ACDC fan)
Exclusive for fans with UL at the end of the model number.

Model no.	Power cord length [L] (mm)	Mass (g)
489-007-L10	1000	48
489-007-L21	2100	80

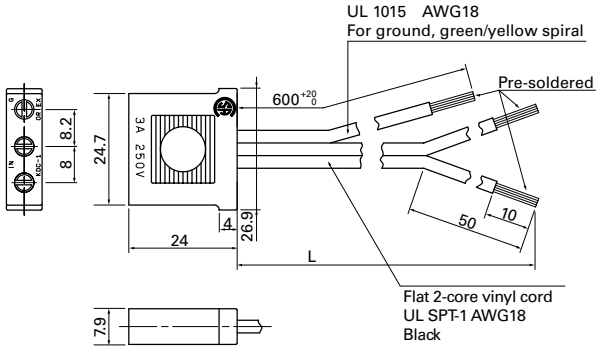

For 80×80×25 mm, 80×80×38 mm, 92×92×25 mm, 120×120×25 mm

Model no.	Power cord length [L] (mm)	Mass (g)
489-047-L10	1000	38
489-047-L21	2100	71

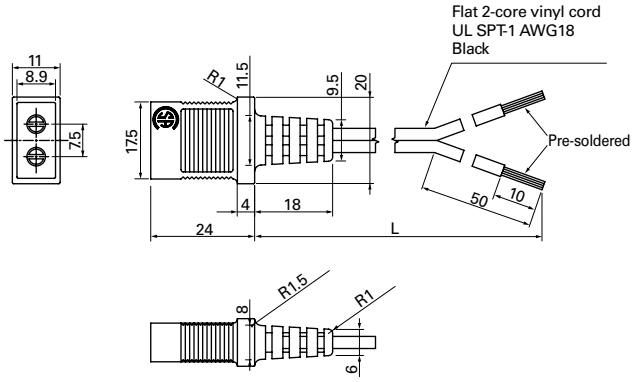

For ⌀172×51 mm, ⌀172×150×51 mm, 160×160×51 mm

Model no.	Power cord length [L] (mm)	Mass (g)
489-084-L10	1000	37
489-084-L21	2100	70

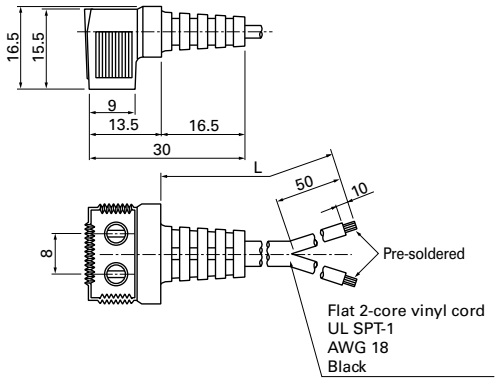

■PSE compatible, UL/CSA [c-UL] certified models UL file no.: E35708

For 160×160×51mm

Model no.	Power cord length [L] (mm)	Mass (g)
489-1652-L10	1000	39
489-1652-L21	2100	75

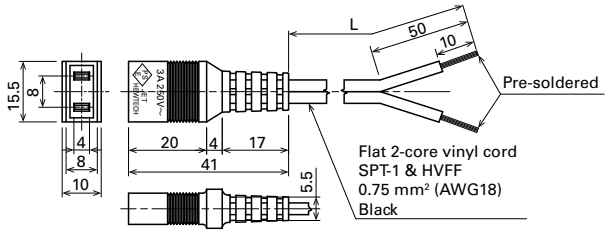

●Be careful not to damage the plug cord when taking them out of the package.

Plug cord for ACDC fan Dimensions (unit: mm)

■PSE compatible, UL/CSA [c-UL] certified models UL file no.: E43202

For 92×92×38 mm, 120×120×38 mm 9AD type

Model no.	Power cord length [L] (mm)	Mass (g)
489-1635-L10	1000	38
489-1635-L21	2100	74

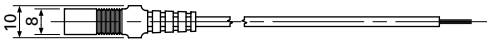

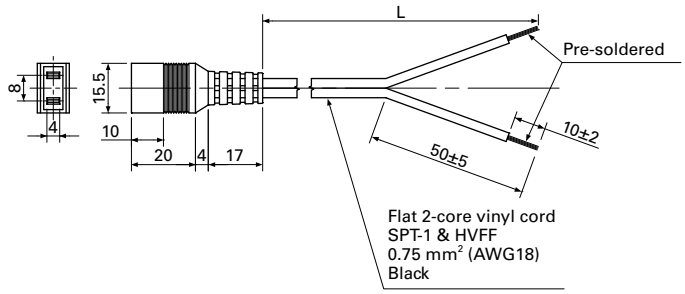

Sensor extension wiring harness

For 92×92×38 mm, 120×120×38 mm 9AD type

Model no.	Mass (g)
489-1636	9

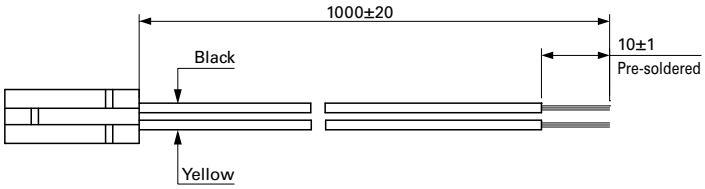

Connector Model no.: TE Connectivity 172211-2
Contact Model no.: TE Connectivity 170376-1

Lead wire: AWG24 UL 1007

●Be careful not to damage the plug cord when taking them out of the package.

Terminal model wiring harness for ACDC fan Dimensions (unit: mm)

For 160×160×51 mm, ø172×150×51 mm
Compatible with a fan with low-speed sensor, and a fan with pulse sensor and PWM control.

Model no.	Lead wire length [L] (mm)	Mass (g)
489-1647	1000	27
489-1650	2100	54

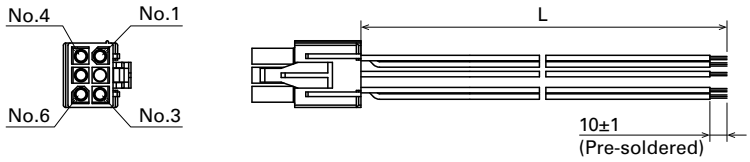

Connector Model no.: TE Connectivity 1-172168-9

Power lead wire
AWG22 UL 11347

Other lead wire
AWG24 UL 3385

For 160×160×51 mm, ø172×150×51 mm
Compatible with a fan without sensor.

Model no.	Lead wire length [L] (mm)	Mass (g)
489-1648	1000	14
489-1651	2100	28

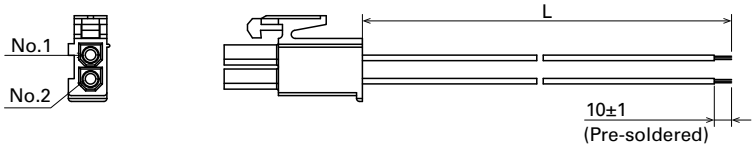

Connector Model no.: TE Connectivity 1-172165-9

Lead wire: AWG22 UL 11347

Option

Typical Connectors for DC Fans

Listed below are the typical contact/housing connectors with a proven track record with our products. For customization details, contact us.

Manufacturer	2 pins Housing model number	3 pins Housing model number	4 pins Housing model number	6 pins Housing model number	8 pins Housing model number	Contact model number
MOLEX	22-01-1022:P/N 5051-02*	22-01-1032:P/N 5051-03* 22-01-3037:P/N 2695-03RP*	22-01-1042:P/N 5051-04* 22-01-3047:P/N 2695-04RP 47054-1000	—	—	08-55-0130:P/N 2759-(558)B
						08-50-0113:P/N 2759-(P909)B
						08-70-0064:P/N 5159T*
						08-70-0048:P/N 5159PBT*
						39-00-0372:P/N 2759T*
						39-00-0374:P/N 2759GS
						39-00-0376:P/N 2759G
						39-00-0380:P/N 2759PBG
	43025-0200*	—	43025-0400*	44133-0600	—	43030-0001*
						43030-0002*
						43030-0003*
						43030-0004
						43030-0005
						43030-0006
						46235-0001
	—	—	51021-0400	—	—	50079-8000
	51191-0200*	51191-0300*	51191-0400*	—	—	50802-9001*
						50802-8000
	50-37-5023:P/N 5264-02*	50-37-5033:P/N 5264-03*	50-37-5043:P/N 5264-04*	—	—	08-70-1039:P/N 5263PBT*
	39-01-2020:P/N 5557-02R*	—	39-01-2040:P/N 5557-04R*	—	—	39-00-0059:P/N 5556PBT*
						39-00-0038:P/N 5556T*
TE Connectivity	171822-2*	171822-3*	171822-4*	—	—	170262-1*
	179228-2*	179228-3*	179228-4*	—	—	179227-1*
	—	—	—	—	794617-8	1-794607-1
Hirose	DF1B-2EP-2.5RC*	DF1B-3EP-2.5RC*	—	—	—	DF1B-2428PCF*
	DF3-2EP-2C* DF3AA-2EP-2C*	DF3-3EP-2C* DF3AA-3EP-2C*	DF3-4EP-2C* DF3AA-4EP-2C*	—	—	DF3-EP2428PCF*
Japan Solderless Terminals	EHR-2*	EHR-3*	EHR-4*	—	—	SEH-001T-P0.6*
	SMP-02V-BC*	SMP-03V-BC*	SMP-04V-BC*	—	—	SHF-001T-0.8BS*
	SMP-02V-NC*	SMP-03V-NC*	—	—	—	
	H2P-SHF-AA*	H3P-SHF-AA*	—	—	—	
	PHR-2*	PHR-3*	PHR-4*	—	—	SPH-002T-P0.5S*
						SPH-002T-P0.5L
	XAP-02V-1*	XAP-03V-1*	XAP-04V-1*	—	—	SXA-001T-P0.6*
	XMP-02V*	XMP-03V*	—	—	—	SXA-01T-P0.6
	XHP-2*	XHP-3*	XHP-4*	—	—	SXH-001GU-P0.6*
						SXH-001T-P0.6*
						SXH-002T-P0.6
	SMR-02V-B*	SMR-03V-B*	SMR-04V-B*	—	—	SYM-001T-P0.6*
	SMR-02V-N*	SMR-03V-N*	SMR-04V-N*	—	—	
	—	—	ZHR-4	—	—	SZH-002T-P0.5

* Recommended connectors

Recommended tubes and cable ties for DC fan

	Manufacturer	Representative model numbers	Specifications	UL file no.
PVC tube	YAMAICHI CHEMICAL	YET-300H	105˚C 300 V VW-1	E55011
	IWASE KAGAKU KOGYO	AH-3		E56036
Thermal contraction tube	SUMITOMO ELECTRIC	SUMITUBE® F2 (Z)	125˚C 600 V VW-1	E48762
	SUMI-PAC	SUMITUBE® F32		
Cable tie	ABB	TY23M	UL 94V-2	E49405
	PANDUIT	BT1M		E56854
	HellermannTyton	T18R		E64962

Note: The specifications in this table are for reference purposes only. When selecting, please check catalogs of each brand.

Overview and Characteristics of Fan

Overview

A cooling fan is widely used to extend life of your system by cooling off heat of the system that many electrical components are mounted in a very high density and dissipating heat. Since we SANYO DENKI developed "San Ace" which is the first AC fan in Japan in 1965, we have increased fan motor lineup until now meeting customer's needs rapidly based on our tremendous career. We SANYO DENKI will continue to develop new fans with high airflow, low noise, low vibration, and energy-saving design.

Characteristics

We can roughly devide fan into two types which are AC and DC.

AC fans

SANYO DENKI succeeded in the mass-production of AC fans in 1965. SANYO DENKI was the first Japanese manufacturer to have succeeded at this.

- High performance
- High reliability
- Safety

DC fans

SANYO DENKI succeeded in the mass-production of DC fans in 1982.

- High performance
- Low power consumption
- Low vibration
- Low leakage of flux
- High reliability

SANYO DENKI currently has a wider variety of products like Long Life Fan, Splash Proof Fan, and Oil Proof Fan, Blower, Centrifugal Fan etc to meet all customer needs.

Reliability and expected life

A cooling fan generally cools itself as well. The temperature rise of the motor is relatively low and the temperature rise of the grease in the bearings is also low, so expected life is longer than general some either motors. Since the service life of bearings is a theoretical value that applies when they are ideally lubricated, the life of lubricant can be regarded as expected life of the fan. DC fan consumes less power and its temperature rise of bearing is very low. When the measurement conditions are: L10 (the remaining product life in the lifespan test is 90%), with an ambient temperature of 60˚C (85˚C for Wide Temperature Range Fans), at the rated voltage, and continuously run in a free air state. The table below indicates the relationship between ambient temperature and expected life estimated on the basis of our life tests and same other tests conducted by SANYO DENKI.

Expected life of DC fans

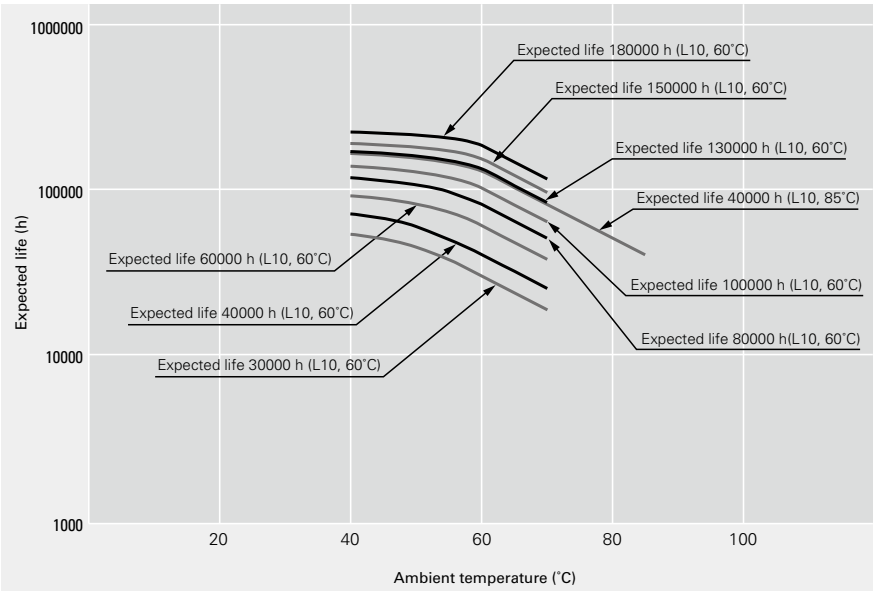

Rated voltage, continuously run in a free air state, survival rate of 90%

Expected life of AC fans

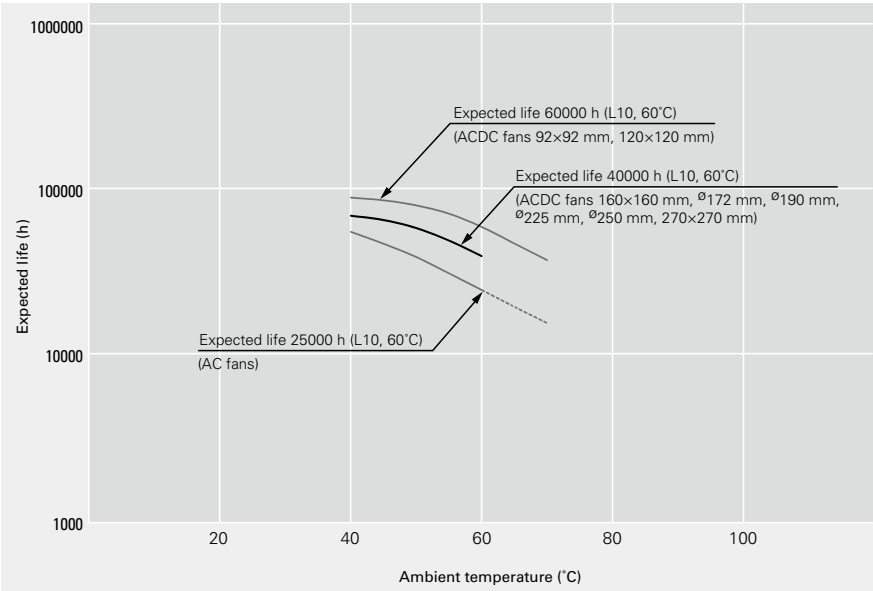

Rated voltage, continuously run in a free air state, survival rate of 90%

Noise characteristics

Noise is average value that measured at 1 meter away from air intake side of fan that is suspended on special frame in anechoic chamber (as per JIS B 8346).

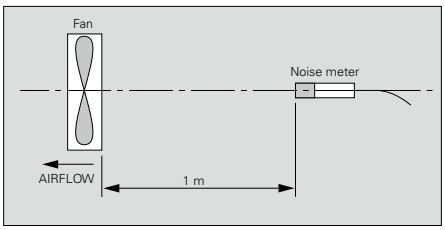

Acoustic radio wave anechoic chamber

Measuring airflow and static pressure

It is very difficult to measure airflow and static pressure. In fact, the performance curve may vary greatly according to the type of measuring equipment.
The commonly-used type of measuring equipment is a wind tunnel using a Pitot tube. SANYO DENKI uses a very precise method using double chamber equipped with many nozzles.

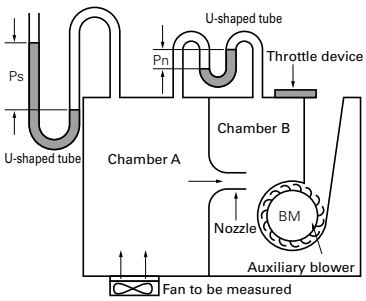

Double chamber measuring equipment

$Q = 60A\bar{v}$ (A)

where

Q = airflow (m^3/min)

A = cross sectional area of nozzle $= \frac{\pi}{4}D^2$ (m^2)

D = nozzle diameter

$\bar{v}$ = average airflow velocity of nozzle $= \sqrt{2g\frac{Pn}{\gamma}}$ (m/s)

γ = Specific weight of air = ρg (N/m^3)

(Air density ρ = 1.2 kg/m^3 at 20˚C, 1 atm)

g = acceleration of gravity = 9.8 (m/s^2)

Pn= differential pressure (Pa)

Ps= static pressure (Pa)

The measuring equipment using double chamber is method to be calculated from airflow goes through nozzle and differential pressure between pressure of inside of chamber (Ps) and atomospheric pressure by measuring differetial pressure between air intake and exhaust of nozzle (Pn).

Conversion table

Static pressure

1 mm H_2O=0.0394 inch H_2O

1 mm H_2O=9.8 Pa (Pascal)

1 inch H_2O=25.4 mm H_2O

1 Pa=0.102 mm H_2O

1 inch H_2O=249 Pa

Airflow

1 CFM (ft^3/min)=0.0283 m^3/min

1 m^3/min=16.67 ℓ/s

1 CFM=0.472 ℓ/s

1 ℓ/s=0.06 m^3/min

Motor Protection

If the fan blades are restricted, an overcurrent occurs and leads to a rise in the fan coil temperature. This can result in reduced performance, damage, or a fire. To prevent this from occurring, SANYO DENKI's fans incorporate an overheating protection function.

Reverse polarity protection function (DC fan)

No problem about fan even if positive & negative lead are connected in reverse.
However, when wiring fans with sensors or PWM speed control function, connecting positive and negative leads in reverse may damage the fans.

Burnout protection function at locked rotor condition (DC fan, ACDC fan)

Current cutoff system
If the fan blades are restricted, the coil current is cut off at regular cycles to prevent overheating of the coil. When the hindrance is removed, the fan restarts automatically.

Burnout protection function at locked rotor condition (AC fan)

Impedance protection (60 mm sq., 80 mm sq., 92 mm sq., 120 mm sq.)
This system is used for shading coil-type fans. When the blades are restricted, the current is reduced by the impedance of the coil itself to prevent a temperature rise in the coil. However, if the applied voltage exceeds the specification range, an overcurrent can occur and result in overheating, and so care needs to be taken.

Thermal protection (160 mm sq., ⌀172 mm)
This system is used for condenser phase-type fans. A temperature sensor is incorporated in the coil so that if the temperature exceeds the specification temperature, the current is cut off to prevent overheating of the coil.

Guideline in Selecting a Fan

How to select an appropriate fan

The following example is a guideline regarding how to select an appropriate fan for cooling your system

Determining of your system specifications and conditions

Determine the temperature rise inside your system and obtain the total heating value inside your system on the basis of its inputs and outputs.

Example

V: Total heating value of your system (W)=100 (W)

△T: Inside temperature rise (K)=15 (K)

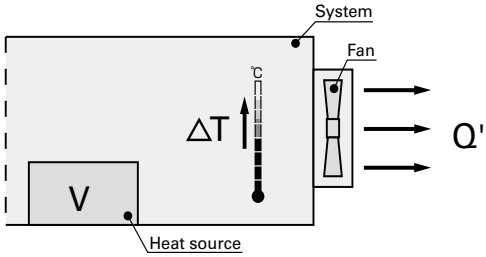

Calculating the required airflow for cooling

After the equipment specifications and conditions of your system have been determined, calculate required airflow to meet the conditions. (Note that the formula shown below only applies when the heat radiation is performed only by cooling air from the fan.)

Example

Q': Motion airflow (m^3/min)

$$Q' = \frac{V}{20\triangle T} = \frac{100\ (W)}{20\times15\ (K)} \fallingdotseq 0.33\ (m^3/min)$$

Selecting the fan

After the motion airflow has been calculated, select an appropriate fan motor based on the value.The motion airflow when the fan motor is actually mounted in your system can be obtained using the airflow-static pressure characteristics curve and system impedance.However, the system impedance cannot be measured without a measuring equipment, so fan with 1.5 to 2 times higher airflow than the actual max airflow should be selected (operating airflow is one-third to two-thirds of maximum airflow).

Example

Q: Maximum airflow (m^3/min)

Q'=Q×2/3

Q=Q'×3/2=0.33×3/2≒0.5 (m^3/min)

Next, In case that you select a fan having an airflow of 0.5 (m^3/min) or more and a appropriate size for the space inside your system.

For example, If you need a fan of 60 mm square, 25 mm thickness and 12 V, you should select is 9RA0612H4001 (maximum airflow = 0.54 m^3/min).

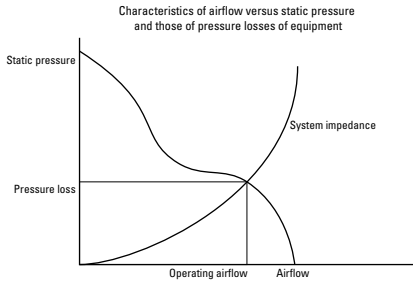

Confirming the selected fan

Calculate the temperature rise inside your sysetem when your sysetem having 100 (W) of total heating value is forcefully cooled down by a 9RA0612H4001 fan.

Example

Q' =Q×2/3=0.54×2/3≒0.36 (m^3/min)

△T =V/20Q'=100 (W)/20×0.36 (m^3/min)≒13.9 (K)

From the above, the temperature rise inside your system is calculated as 13.9 (K).

Since the value obtained from the above equation is only a rough target, final fan selection should be based on your actual installation test.

Portable measuring device for measuring airflow and system impedance within equipment

San Ace Airflow Tester

■Features

Enables the selection of the optimal fan for a device

An optimal fan for a device can be selected by entering accurate measurement results into thermal design simulation software.

Compact and lightweight

With a compact design and weight of approximately 6 kg, it is portable enough to measure immobile equipment.

Please refer to page 584 for detail.

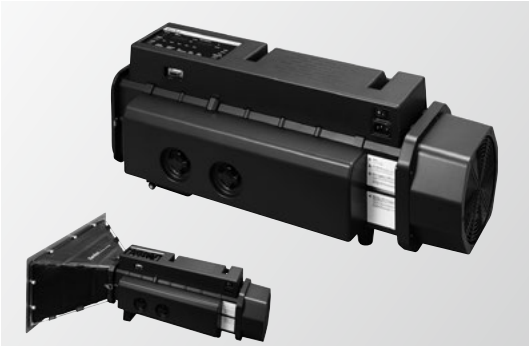

With connection duct mounted

Specifications for DC Fan Sensors

Pulse sensor (Tach output type) example

Pulse sensor outputs two pulse waves per revolution of fan, and it is good to detect fan speed. Pulse sensors can be incorporated in all kinds of DC fans.
Noise from inside the fan or from external devices may effect sensor output.
Please contact us for details.

Output circuit
Open collector

Specifications
V_{CE}= +30 V max.
Ic=5 mA max. [Vol=Vce (SAT)= 0.6 V or less]

Inside of DC fan

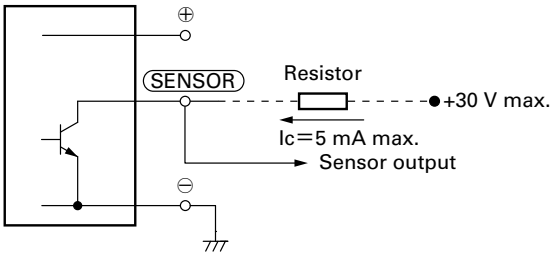

Output waveform (Need pull-up resistor)
In case of steady running

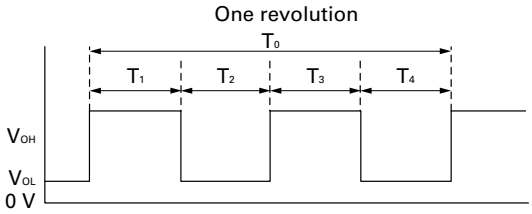

$T_{1\ to\ 4} \fallingdotseq (1/4)\ T_0$

$T_{1\ to\ 4} \fallingdotseq (1/4)\ T_0 = \frac{60}{4N}$ (s)

N= Fan speed (min^{-1})

If you want detailed specifications that apply when the rotor is locked, please contact SANYO DENKI.

Locked rotor sensor (rotation / lock detection type) example

Locked rotor sensor outputs fan status signals. It is good to check whether the fan is running or locked
Noise from inside the fan or from external devices may effect sensor output.
Regarding details of the reverse logic and specifications of lock sensor output signals, please contact SANYO DENKI.
Lock sensor can not be used in some models. Contact us for more information.

Output circuit
Open collector

Specifications
V_{CE}= +30 V max.
Ic= 5 mA max. [V_{OL}= V_{CE} (SAT)= 0.6 V or less]

Inside of DC fan

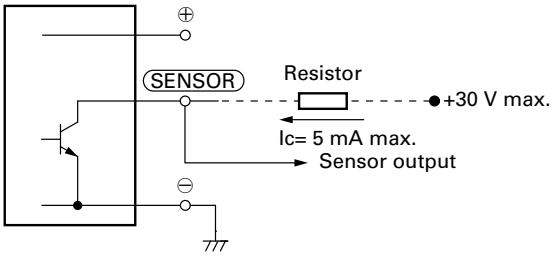

Output waveform (Need pull-up resistor)

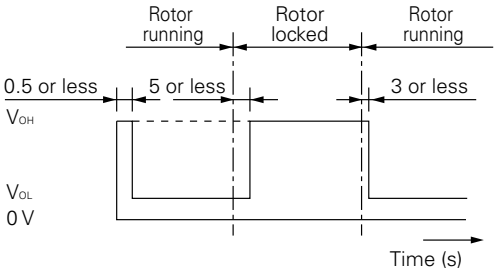

Note: The output is completely at Vol with 0.5 s or less after power-up.

Low-speed sensor (rotating speed detection type) example

Low-speed sensor outputs a signal when fan speed goes down to trip point or less. It is good to detect cooling degradation of fan.
Noise from inside the fan or from external devices may effect sensor output, please.
If you want detailed specification and reverse signal output,please contact SANYO DENKI.
Low-speed sensors can not be used in some models. Contact us for more information.

Output circuit

Open collector

Inside of DC fan

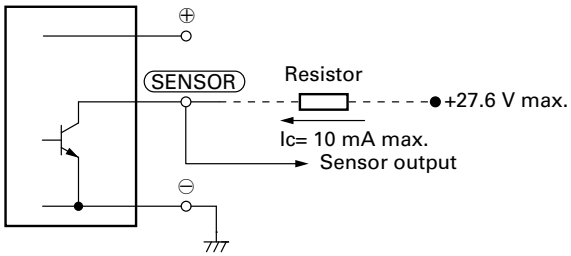

Specifications

V_{CE}= +27.6 V max.
Ic= 10 mA max. [V_{OL}= V_{CE} (SAT)= 0.5 V or less]

Sensor scheme

Example 1: In case steady running

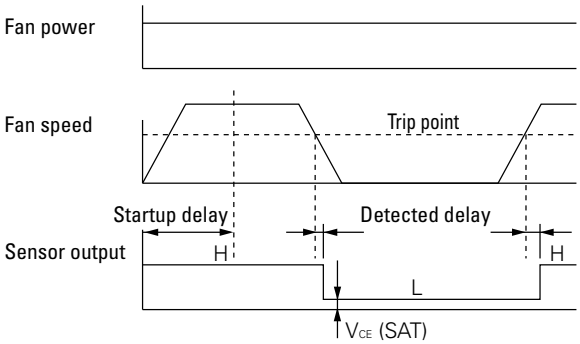

Example 2: In case that the rotor is locked when the fan motor is turned on and released after the start-up delay time

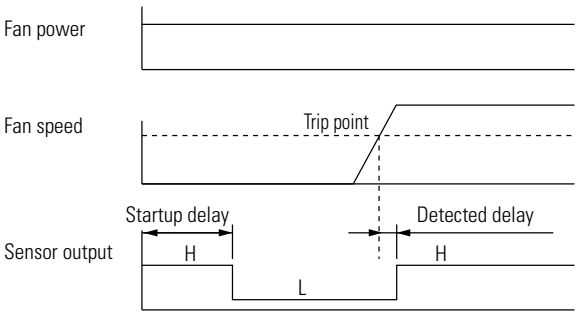

Specifications for ACDC Fan Sensors

Low-speed sensor (rotating speed detection type) example

Low-speed sensor outputs a signal when fan speed goes down to trip point or less. It is good to detect cooling degradation of fan.
Noise from inside the fan or from external devices may effect sensor output, please.
If you want detailed specification and reverse signal output,please contact SANYO DENKI.

Output circuit: Open collector

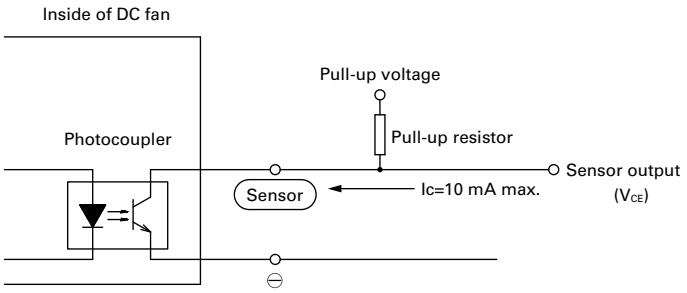

Sensor scheme

Example 1: when steady running

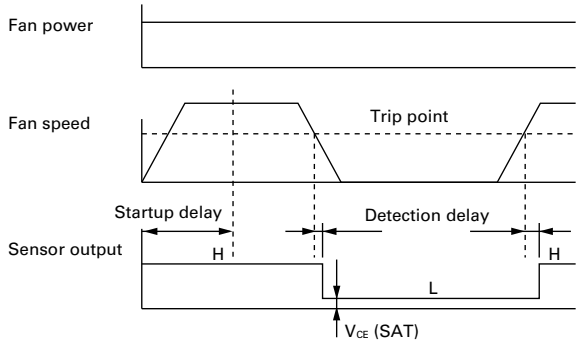

Example 2: when the rotor is locked when the fan motor is turned on and released after the start-up delay time.

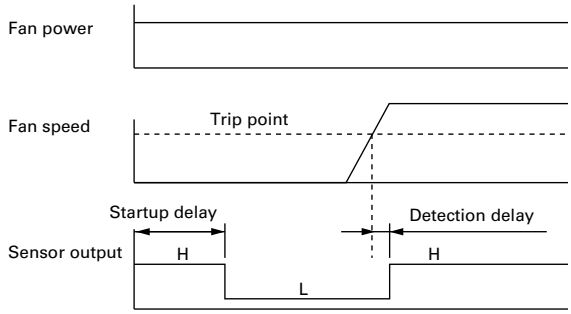

Detection delay: 3 s max.

	Model number	Pull-up voltage	V_{CE}(SAT)	Trip point	Startup delay
92 × 92 × 38 mm San Ace 92AD 9AD type	9AD0901H1H	+27.6 VDC max.	1.0 V max.	1700 min^{-1}	18±3 s
	9AD0901M1H			850 min^{-1}	36±3 s
120 × 120 × 25 mm San Ace 120AD 9AD type	9AD1201H4H001	+60 VDC max.	1.2 V max.	1700 min^{-1}	18±3 s
	9AD1201M4H001			1100 min^{-1}	
	9AD1201L4H001				
120 × 120 × 38 mm San Ace 120AD 9ADA type	9ADA1201G1H001			1700 min^{-1}	
120 × 120 × 38 mm San Ace 120AD 9ADAW type	9ADAW1201H1H001				
120 × 120 × 38 mm San Ace 120AD 9AD type	9AD1201H1H	+27.6 VDC max.	1.0 V max.		
160 × 160 × 51 mm San Ace 160AD 9AD type	9AD1601H5H001	+60 VDC max.	1.2 V max.		
	9AD1601H5HT01				
160 × 160 × 51 mm San Ace 160AD 9ADW type	9ADW1601H5H001				
	9ADW1601H5HT01				
⌀172 × 150 × 51 mm San Ace 172AD 9AD type	9AD5701H5H001				
	9AD5701H5HT01				
⌀172 × 150 × 51 mm San Ace 172AD 9ADW type	9ADW5701H5H001				
	9ADW5701H5HT01				

EMC Conditions for ACDC Fans

As the installation conditions of the subject ACDC fans vary depending on the customer's equipment configuration, their compatibility test is conducted at testing organizations using the example of connection schematics and components shown below, and the CE Mark/UKCA Mark are labeled accordingly. In order for the customers' equipment to bear the CE Mark/UKCA Mark, it will be necessary to conduct a final compatibility test with the fan installed.

Subject ACDC Fans

120 × 120 × 25 mm San Ace 120AD 9AD type
160 × 160 × 51 mm San Ace 160AD 9AD / 9ADW type
ø172 × 150 × 51 mm San Ace 172AD 9AD / 9ADW type

Applied standards

EMI	EN61000-6-3 EN61000-3-3
EMS	EN61000-6-2

120 × 120 × 25 mm San Ace 120AD 9AD type

Recommended noise filter

Manufacturer	Model number
SCHAFFNER	FN2070-10-*
COSEL	NAC-10-472
SOSHIN ELECTRIC	NF2010A-SUM

Recommended resistor ratings

Resistance	10 Ω
Rated power	10 W

Example of connection schematic

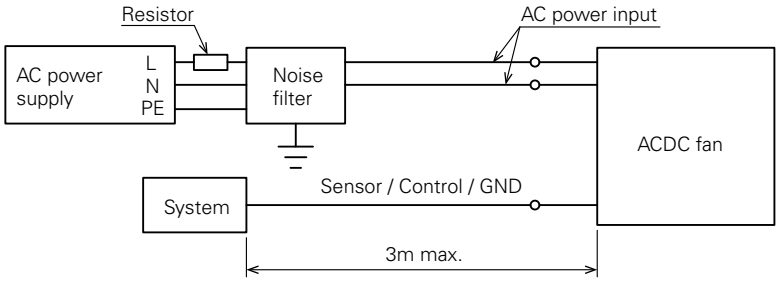

160 × 160 × 51 mm San Ace 160AD 9AD / 9ADW type

Recommended noise filter

Manufacturer	Model number
SOSHIN ELECTRIC	NF2010A-SUM

Recommended ferrite core

Manufacturer	Model number
TOKIN	ESD-R-25D-8

Recommended resistor ratings

Resistance	6.8 Ω
Rated power	10 W

Example of connection schematic

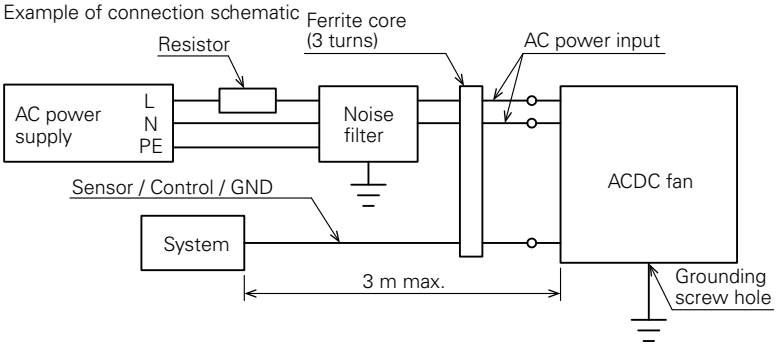

ø172 × 150 × 51 mm San Ace 172AD 9AD / 9ADW type

Recommended noise filter

Manufacturer	Model number
SCHAFFNER	FN2070-10-*
COSEL	NAC-10-472
SOSHIN ELECTRIC	NF2010A-SUM

Example of connection schematic

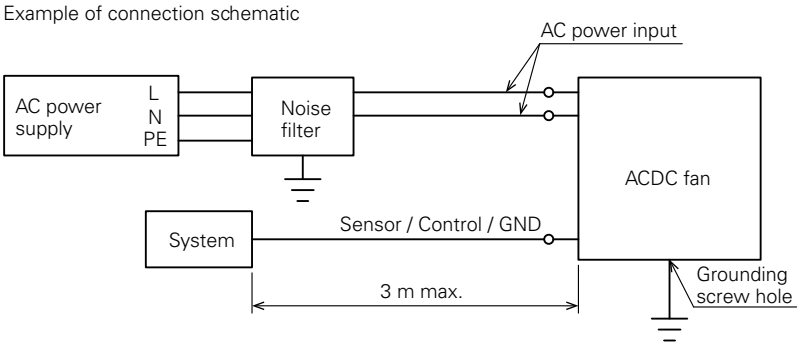

- The applied standards above are not for residential but for industrial environments.
- Use the recommended or equivalent noise filters and ferrite core.
- Use a resistor with the recommended ratings.
- The noise filter must be grounded.
- The sensor/control/GND wiring should measure under 3 m.
- Pass all lead wires through a ferrite core with 3 turns (for 160 × 160 × 51 mm).
- Make sure to ground the fan using the ground screw hole on the frame (for 160 × 160 × 51 mm and ⌀172 × 150 × 51 mm).
- Please contact your point of sale for details.

Specifications for AC Fan Sensor

ACDC fan sensor specifications differ from those below.

Specifications of sensor circuit

	5 V (ITEM-20 (1))	12 V (ITEM-30 (1))
Example of model.no	109S405UL	
System	Speed detection, Auto-restart, Open collector	
Power supply	5 VDC±10% At 5 V, 6 mA	12 VDC±20% At 12 V, 10 mA
Recommend sensor circuit output	At Vp= 5 V, I= 100 mA max.	At Vp= 12 V, I = 200 mA max.
Trip point	Standard speed: 1700 min^{-1}±10% Low speed: 850 min^{-1}±10%	
Response speed	Standard speed: Startup delay 18 s Detection delay 1 s Low speed: Startup delay 36 s Detection delay 2 s	
Insulation resistance	10 MΩ min. at 500 VDC (2)	
Dielectric strength	50/60 Hz, 1000 VAC, 1 minute (2)	
Ambient conditions	Temperature: -10 to +60˚C , humidity: 90% RH max. (at 40˚C)	

Nameplate

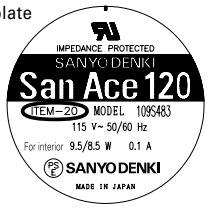

(1) [ITEM-20] and [ITEM-30] are printed on the fan nameplate.
(2) Between lead wire conductors and frame

Sensor scheme

Example 1: When the AC power for the fan and the DC power for the sensor are turned on at the same time

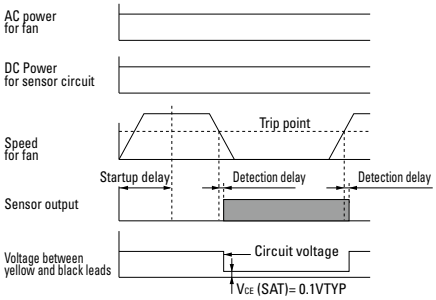

Example 2: When the AC power for the fan is turned on first, then the DC power for sensor is powered on

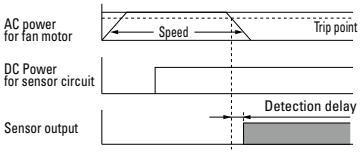

Example 3: When the DC power for sensor is first powered on, then the AC power for the fan is turned on

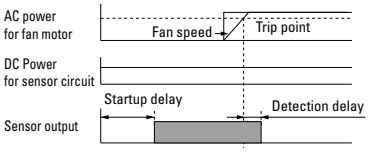

Sensor output circuit

5 V (ITEM-20*)

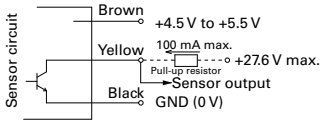

12 V (ITEM-30*)

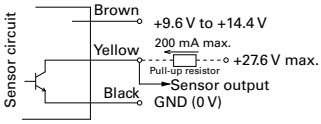

GND (Black) should be shared in case that power supply for sensor circuit (Brown) and that for sensor pull-up (Yellow) are separated.

Fans with PWM Control

PWM control

1. Overview

Pulse Width Modulation (PWM) control enables you to externally control the speed of the fan by varying the duty cycles of PWM input signals between control and grounding terminals.
It allows fans to operate optimally in response to the device's heat level, lowering the noise and power consumption of the system.

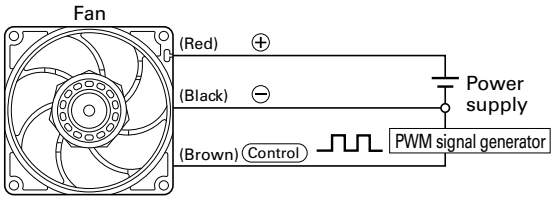

PWM control has the following advantages:

(1) Because the PWM signal is digitally input, precise control is possible.
(2) Because the PWM signal is digitally input, multiple fans can be controlled.
(3) Upon users request, how the fan speed responds to PWM signals can be customized. For example, fan can be set to stop or run at low speed at 0% PWM duty cycle.

2. PWM duty input signals and wiring diagram

Other than a voltage input, an open collector/drain input can be used for PWM signal input.
Note that using an open-collector/drain input or applying an input voltage/frequency outside the specified range may cause the fan speed for a given PWM duty cycle input to deviate from the rated value or may result in product failures.
The input signal voltage and the frequency differ with models. Please contact us for details.

■Example of input signal

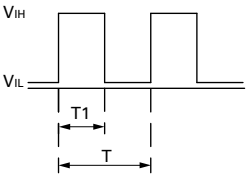

V_{IH}=4.75 to 5.25 V
V_{IL}= 0 to 0.4 V
PWM duty cycle (%) = $\frac{T1}{T}\times100$
PWM frequency 25 (kHz) = $\frac{1}{T}$

Current source (Isource) = 1 mA max. (when control voltage is 0 V)
Current sink (Isink) = 1 mA max. (when control voltage is 5.25 V)
Control terminal voltage = 5.25 V max. (when control terminal is open)

■Wiring example

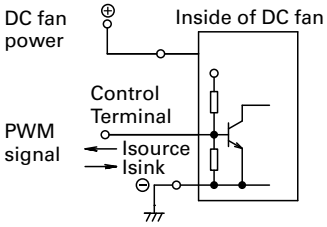

3. PWM duty cycle – Speed characteristics

Fan speed of PWM control fans change, as the below performance curve shows, in response to the PWM duty cycle input.
If necessary, users can do the speed setting by themselves, making the fans operate at the optimum speed.
Also, upon user's request, how fan speed responds to a PWM signal can be customized so that the fan stops or runs at low speed for a certain PWM duty cycle input. The below performance curve is for a fan that stops at 0% PWM duty cycle. Specifications differ with models. Please contact us for details.

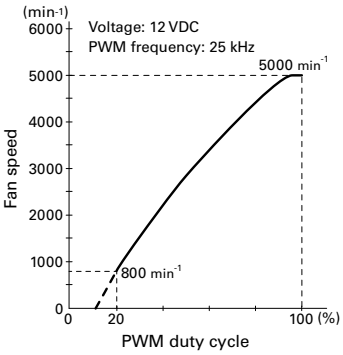

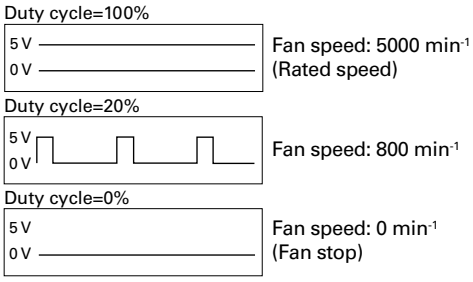

The dotted part of the performance curve (area below 20% PWM duty cycle in the above case) indicates the fan speed is unstable in the area.

4. When you wish to obtain a fan performance with 100 or 0% PWM duty cycle without a PWM signal generator for built-in test.

Performance at 100% PWM duty cycle: Leave the control lead wire open and no connection.*
Performance at 0% PWM duty cycle: Connect the control lead wire directly to ⊖ pin.

* This may vary by model, so see individual product pages for detailed information.

5. Application examples of PWM control fan

Here are a few application examples of PWM control fan.

(1) This system controls the fan speed in response to changing device temperature.
By combining a PWM control circuit and thermistor that detects temperature of device and its parts, it is able to control the fan speed of PWM control fan in response to the changing temperature.

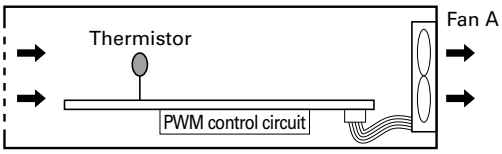

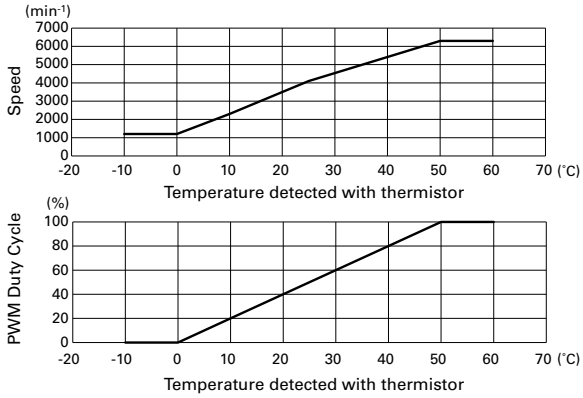

(2) Simultaneous control of multiple fans
Because PWM control is done with digital signal inputs, regardless of fan types or input voltage, multiple fans can be controlled simultaneously.
Below figure shows a system that can control multiple fans with various PWM characteristics simultaneously. Such systems contribute to the low power consumption and noise.

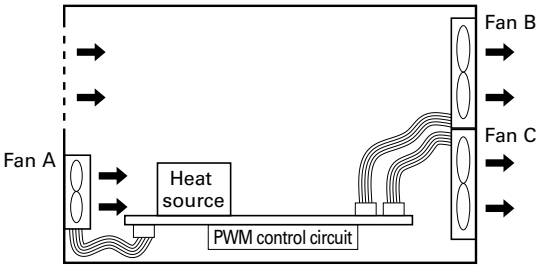

Operation mode	PWM Duty	Fan A	Fan B, C
Full-power	100%	5000 min^{-1}	5000 min^{-1}
Normal	60%	3500 min^{-1}	4000 min^{-1}
Standby (eco mode)	0%	Stop	1500 min^{-1}

Fan A
(model that stops at 0% PWM duty cycle)

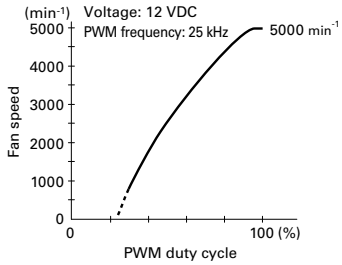

Fan B, C
(model that runs at low speed at 0% PWM duty cycle)

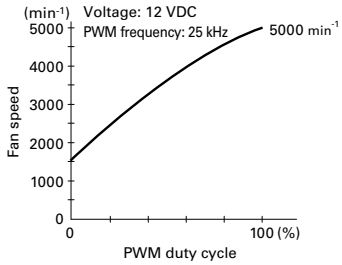

Controlling device that easily regulates the rotational speed of PWM control fans

San Ace PWM Controller

■Features

Reduces system power consumption and fan noise
For PWM fan speed control, a PWM control circuit needs to be newly designed and configured.
By using this product, however, PWM fans can be fully utilized without the need for preparing new circuits, contributing to reducing the system power consumption and the fan noise.

Can be common-powered by the fan power supply
The controller can be powered by the fan power supply of rated voltage 12, 24, and 48 VDC, and no separate supply is required.

Maximum of four fans connectable
Up to four PWM fans can be connected and controlled.

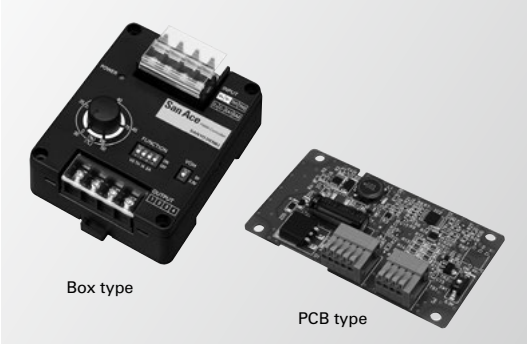

Please refer to page 580 for detail.

Splash Proof Fan

Ingress protection ratings (IP code)

The degree of protection of our products are rated as per IEC (International Electrotechnical Commission) 60529. The protection ratings of our fans only apply to electrical components (motor coils and electronic components) and do not cover mechanical components (blades, frames, and bearings). Please test fans in your environment before purchase as they may not operate properly with water or dust depending on the operating environment.

Protected electrical components and motor coils

■ Definition of Ingress Protection (IP Code)

I P X X

- Second digit: Protection against water
- First digit: Protection against solid objects and access to hazardous parts

First digit	Definition
0	No protection
1	Protection against solid objects ≥ 50 mm
2	Protection against solid objects ≥ 12.5 mm
3	Protection against solid objects ≥ 2.5 mm
4	Protection against solid objects ≥ 1 mm
5	Protection against a level of dust that could hinder operation or impair safety
6	Complete protection against dust

Second digit	Definition
0	No protection
1	Protection against dripping water
2	Protection against water spray up to 15°
3	Protection against spraying water
4	Protection against splashing water
5	Protection against low pressure water jets
6	Protection against high pressure water jets
7	Protection against temporary immersion in water
8	Protection against submersion in water

■ IPX8 Requirements

When the power is off, the fan is submerged in water pressurized to the equivalent of 2 meters for 60 minutes. Then it's run for 15 minutes at the rated voltage in free-air. During the test, there shall be no reduction in dielectric strength or fan characteristics.

UPS, inverter, rectifier, high-voltage power supply, etc.

Cautions for Use of a Cooling Fan in the Vicinity of a Power Switching Circuit (prevention of electrolytic corrosion)

If a fan is installed near a large-power or high-voltage switching circuit, the heavy electromagnetic noise resulting from electromagnetic induction in such circuits or the influence of high-frequency noise imposed through the power line of the fan may induce current through the shaft bearing of the fan. Such current may damage the oil film on the bearing and even the friction surface of the bearing. This adverse effect is known as "electrolytic corrosion of the fan. "Electrolytic corrosion affects the smooth revolution of the fan and may reduce its service life. An audible symptom is unusual noise emitted from the fan. This adverse effect is often observed and may partly be explained by the practice of mounting high-density parts, which reduces the gap between the switching circuits and the fan and the use of higher switching frequencies apt to provoke induction. Data processing/communications devices that operate at low voltages are not liable to electrolytic corrosion since they generate less electromagnetic noise.

A Case of electrolytic corrosion

Fans without anti-corrosion features installed near components that generate electromagnetic noise, such as inverter controllers, are liable to experience electrolytic corrosion.

No.	Use	Period until the occurrence of unusual noise
1	Switching power supply	6 months to 2 years
2	UPS	6 months to 2 years
3	General-purpose inverter	1 to 1.5 years
4	Air cleaner	2 to 3 months
5	Inverter for LCDs	6 months

The curve shown in the graph below represents the relationship between the level of the electromagnetic noise induced by a fan and the distance from the fan to the noise source.

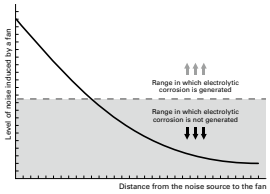

Occurrence of electrolytic corrosion Pattern 1

1. The fan gets charged with high-frequency electricity by high-frequency noise (electric field/magnetic field) generated in the switching circuit.
2. Because of high-frequency electricity charged in the fan, an electric current flows through the bearing of the fan.
3. The electric current breaks the oil membrane on the surface of the bearing and the bearing gets abraded (electrolytically corroded).
4. This symptom often occurs in equipment in which switching circuits are sped up and implemented in high density.
5. Countermeasure 1: To provide a shield plate(1) inside the fan (The plate should be such that does not interfere with airflow).
6. Countermeasure 2: To use a fan with ceramic bearings.

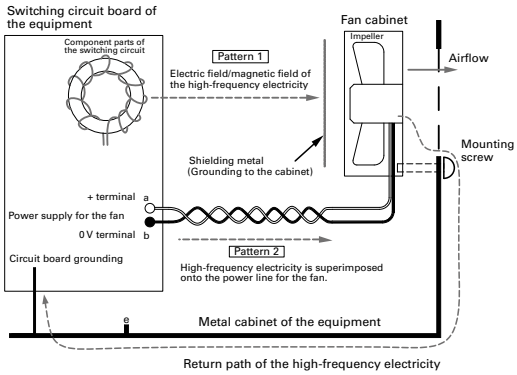

Occurrence of electrolytic corrosion Pattern 2

1. High-frequency electricity flows from the circuit board into the inside of the fan superimposed with the power line for the fan.
2. High-frequency electricity that has entered into the fan flows through the bearing.
3. Oil membrane on the surface of the bearing gets broken and the bearing gets abraded (electrolytically corroded).
4. Countermeasure 1: To remove high-frequency component between terminals "a" and "b", "a" and "e" and "b" and "e" of the power supply for the fan, or to insert a filter(2) into the power line for the fan.
5. Countermeasure 2: To use a fan with ceramic bearings
6. Cables should be twisted in order to decrease induction to the power line for the fan.

(1) Shielding metal plate
As an electromagnetic shield metal, "EMC Guard" is available from our company.
Certain shielding effect can be expected from mounting a general-purpose finger guard inside the fan. In each case, grounding to the cabinet is required.
(2) Filter
Insert a common mode filter when the high-frequency electricity is superimposed on both lines "a" and "b" in the same phase and, if not, insert a normal mode filter.

Measures against electrolytic corrosion

· Relocate fans far from all electromagnetic noise sources.
· Attach an EMC guard to ordinary fans. This should have an effect on electromagnetic noise due to radiation.
· As a power supply, the fan is wired from a circuit for which noise is not superimposed.
· Against heavy electromagnetic noise (electromagnetic induction) and conductive noise from the power supply line for a fan, we recommend the use of an "Electrolytic corrosion proof fan" with ceramic bearing.
This cooling fan prevents electrolytic corrosion of bearings even under conditions where electromagnetic noise is generated. Electrolytic corrosion of ball bearings is prevented by using ceramic balls in ball bearings. The ceramic material is an insulating material.

■Component diagram

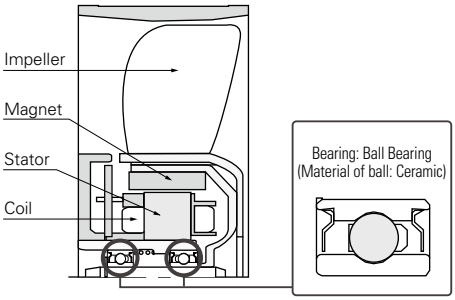

Caution

Electrolytic Corrosion Proof Fan has been designed to prevent the electrolytic corrosion of ball bearings in the fan, but this does not guarantee that the fan will operate normally under conditions where there is strong electromagnetic noise.
Please be sure to fully evaluate the value of fan malfunction due to noise in advance.

Safety Standards

Our products conform to these directives and safety standards. For compliance with standards, see individual product pages.
Safety standard registration numbers are as follows.

Standard name	UL	CSA	TÜV
Certification number	E46810	172248	Varies by model

1. UL ratings (USA)

Underwriters Laboratories Inc. was established by the American Union of Fire Insurance Underwriters. The purpose of UL is to ensure safety of machines, equipment, and materials and protect human lives and property from fire and other accidents. To that end, UL has conducted numerous tests and extensive research and, as a result, set up UL ratings. Any seller of products in any of the majority of the states of the USA must produce their products according to the UL ratings, have them pass UL-specified safety inspections, and have them listed in UL's registration book. Therefore, to export and sell any product in the United States, one must in most cases apply for UL-listing.
Additionally, UL is accredited by The Standards Council of Canada (SCC) as both a Certification Organization (CO) and a Testing Organization (TO) and is officially recognized in all provinces and territories throughout Canada. Accordingly, our products can be tested by UL for compliance with Canadian safety standards. Certified products are entitled to display the cUL Mark, which authorizes their use and sale in Canada. If products are deemed to be compliant with both U.S. and Canadian standards, then both the UL Mark and cUL Mark can be displayed or a combination U.S. and Canadian mark (bottom left).
Our fans are certified as satisfying all UL 507 requirements.

2. CSA standards (Canada)

The Canadian Standards Association (CSA) was set up in response to the advice of the Canadian government. In Canada, the law prohibits the use and sale of any product other than those approved under CSA in terms of safety. CSA has set up CSA standards as inspection procedures and other requirements to ensure product safety.
Our products are certified as satisfying the CSA standard C22.2 No. 113.

3. EN standards (EU members)

In the EU territory, the harmonization of industrial standards and safety standards of different countries is under way. The unified standards are called Harmonized Standards. Each of these standards is marked EN above the standard number. EN standards offer the grounds in design and manufacture when one exports a product to the EU territory. In order for a product to receive a safety marking, the product must be found to conform to TÜV, VDE, or other relevant standard.
Our products are certified by TÜV Rheinland to meet the requirements of EN 60950-1/EN 62368-1. (San Ace Controller complies with EN 60730-1)

4. Electrical Appliances and Materials Safety Act (Japan)

As of April 1, 2001, the Electrical Appliance and Material Control Law has been revised and reenacted as the Electrical Appliances and Materials Safety Act (Japan).
AC fans are classified as 'Blowers' under 'Electric motor-operated appliances'. They are categorized as electrical products other than specific electrical appliances (with the exception of some models) and are required to be labeled to indicate PSE certification.

5. CE marking

To distribute goods in the EU territory, manufacturers are obligated to affix the CE marking to their products as a sign of conformity with EC directives. Manufacturers ensure that their products meet the requirements of individual directives by conforming to EN standards, or IEC standards if there is no applicable EN standards.

6. UKCA marking

It is required to affix the UKCA marking to products sold within the Great Britain market (England, Wales, and Scotland) of the United Kingdom as a sign of conformity to the UK regulations that correspond to EU directives.

7. Technical Standard Conformity Certification

The Technical Standard Conformity Certification mark, set by Japanese Ministry of Internal Affairs and Communications, indicates that the product is certified as either or both of the following: specific radio equipment defined in the Radio Act and terminal equipment defined in the Telecommunications Business Act.
Our San Ace Controller has built-in Technical Standard Conformity-certified specific radio equipment defined in the Radio Act in Japan.
It is also a certified terminal equipment based on the Telecommunications Business Act in Japan.

8. VCCI

VCCI is a membership organization in Japan that aims to suppress electromagnetic interference generated from information technology equipment by industry self-regulation. It sets standards for noise, which affects other communications equipment, generated from data-processing equipment.
VCCI categorizes information technology equipment in two classes: Class A equipment is used in commercial and industrial areas and Class B equipment is used in residential and adjacent areas.
Our San Ace Controller is categorized as Class B information technology equipment.

9. FCC

Federal Communications Commission (FCC) is an independent U.S. government agency responsible for implementing and enforcing U.S. communications law and regulations. Obtaining an FCC certification is required to sell communications equipment including radio equipment in the U.S.
Our San Ace Controller complies with FCC Part 15 Class B.

RoHS Directive Compliance

All products listed in this catalog conform to the RoHS Directive (2011/65/EU).
These Directives restrict the following ten hazardous substances: cadmium, lead, mercury, tetravalent chromium, PBB, PBDE, DEHP, BBP, DBP, and DIBP.
Implementation schedule is as follows:

Products	Implementation date
Fans, PWM Controller, San Ace Controller	From January 2019 production onwards
Plug cords	From October 2018 shipment onwards
Finger guards, filter kits	From January 2018 shipment onwards
Airflow Tester	From July 2019 production onwards

Operating Precautions Fan

Temperature and Humidity conditions

Operating temperature: Refer to the specifications table for each model.
Storage temperature: -20 to +70˚C / -30 to +70˚C (Varies for each model / Non-condensing)
Humidity (operating and storage): 20 to 85% RH (Non-condensing)

Rapid change in temperature may cause condensation. Prevent condensation when storing. Condensation may affect lubrication performance and insulation.

Power specifications

For the specification of rated voltage and voltage range, please check the catalog or drawing for the model number.
Use of voltage exceeding the specified range may lead to performance degradation, device failure, or fire hazards. Do not apply voltage that exceeds specifications to the fan.
An electronic circuit is used for the DC fan. For power supply, use power with ripple less than 5% with low line noise and surge to prevent electronic circuit trouble.

Handling precautions

The fan motor is equipped with a precision ball bearing. Therefore, please handle the motors carefully in order not to shock the bearings.

Installation tips

There are no limitations on the installation direction of fans or blowers. Fans have symbols on the fan indicating the airflow direction and blade rotation direction. When installing, use these symbols to check the airflow direction.

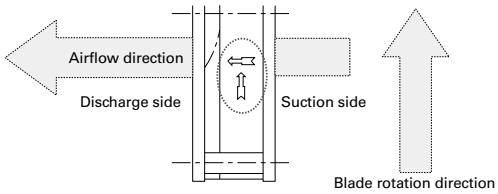

Symbols indicating the fan airflow direction and blade rotation direction

Recommended screw torque

This shows the recommended values for the screw torque when installing the fans. If the tightening torque is higher than the recommended values, the fan can be deformed or damaged.
Use care when tightening. Also, be sure to always use a fan with a ribbed structure when securing by screws with both flanges.

DC fan

Fan mounting hole diameter [mm]	Nominal screw diameter	Recommended screw torque
ø3.5, ø3.7	M3	0.44 N·m max.
ø4.3, ø4.5	M4	0.78 N·m max.
ø4.3, ø4.5	M4	0.98 N·m max. (ø172 mm×51 mm, ø172 mm×150 mm×51 mm, ø200×70 mm)

AC fan

Fan mounting hole diameter [mm]	Nominal screw diameter	Recommended screw torque
ø3.5, ø3.7	M3	0.44 N·m max.
ø4.3	M4	0.58 N·m max. (120 mm×120 mm max.)
ø4.3	M4	0.78 N·m max. (ACDC fan, ø172 mm)
ø5.5	M4, M5	0.78 N·m max. (160 mm×160 mm)

Comparison of ribbed and ribless structures

Regarding plastic frame, we have a option ribbed and ribless about mounting. Please use preferred type up to your application. Please use ribbed fan in case that you hook fan up clamping either side fan mounting hole target. (According to the model, only models with or without ribs are available.)
*Use a fan with a rib structure when securing by screws with both flanges.

When securing screws to ribless plastic frame models, use a flange to secure on one side.

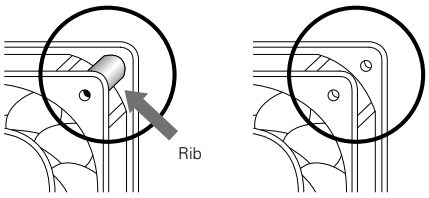

Ribbed Ribless

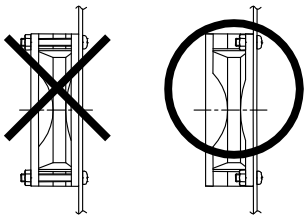

Securing with flanges on both sides
Securing with a flange on one side

Fan Mounting Using Self-tapping Screw

Installing self-tapping screws into the plastic frame of the fan may split or deform it.
If using self-tapping screws, use screws that are recommended by our company, and refer to our recommended tightening torques and recommended pilot hole shapes. Pay close attention to the operating precautions and fully understand your equipment before you use it.

Recommended screw torques

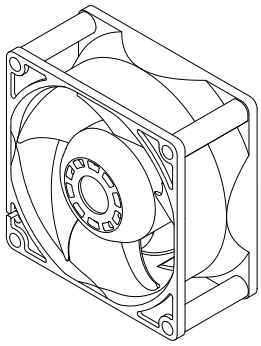

Fig. A: Ribbed fan

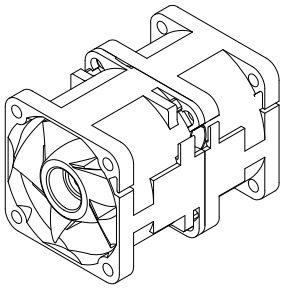

Fig. B: Counter rotating fan

	Recommended screw torque [N·m]	Fan mounting hole diameter [mm]
Ribbed fan (Fig. A)	0.8 max.	ø3.5, ø4.3, ø4.5
Counter rotating fan (Fig. B)	0.6 max.	

Do not use self-tapping screws in the following cases:

- For ribless fans (except for counter rotating fans)
- When mounting finger guards on fans

Using self-tapping screws could deform or split the frame. Please use regular screws.

Recommended pilot hole shape

[For nominal diameter 4 mm]

Self-tapping screw model no.
SY-NS020412P11

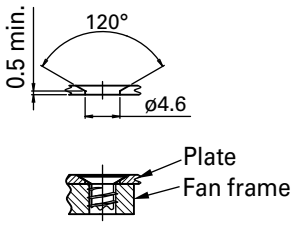

Self-tapping screw model no.
SY-NS010412P11

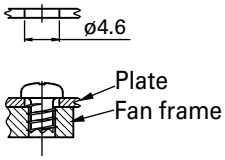

Minimum mounting plate thickness: T=1.2 mm

[For nominal diameters of 4.8 mm and 5 mm]

Self-tapping screw model no.
SY-NS024812P15
SY-NS020512P15

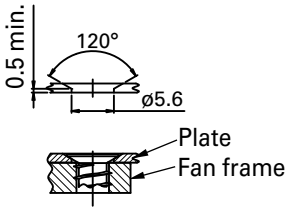

Self-tapping screw model no.
SY-NS014812P15
SY-NS010512P15

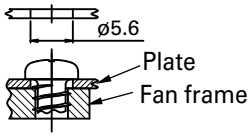

Minimum mounting plate thickness: T=1.2 mm

Recommended self-tapping screws

- Material: Steel
- Plating: Trivalent chromating plating

unit: mm

Fan mounting hole diameter	Self-tapping screw model no.	Nominal screw diameter	Length [L]	Head shape	Flat-head/pan-head dimensions		
					Head diameter [D]	Height of head [H]	Cross recess No.
ø3.5	SY-NS020412P11	4	12	Flat	6.2	1.1 max.	2
	SY-NS010412P11	4	12	Pan	5.5	2.0	2
ø4.3	SY-NS024812P15	4.8	12	Flat	6.8	1.2 max.	2
	SY-NS014812P15	4.8	12	Pan	7.0	2.6	2
ø4.5	SY-NS020512P15	5	12	Flat	6.8	1.2 max.	2
	SY-NS010512P15	5	12	Pan	7.0	2.6	2

Head shape: Flat

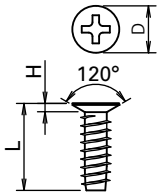

Head shape: Pan

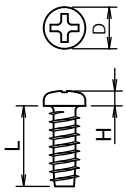

Operating precautions

- Place the self-tapping screw so that it is vertical and centered with the frame mounting hole (Fig. A) and then screw it in. The self-tapping screw could deform or split the frame if you screw it into the frame when the screw is not vertical.
- Screw in the self-tapping screw with the center of the mounting hole on the fan and the center of the pilot hole on the mounting plate aligned (Fig. B). Misaligned holes could lead to the frame being deformed or split.

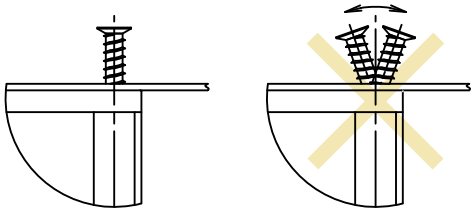

Vertically placed screw　　Inclined screw

Fig. A

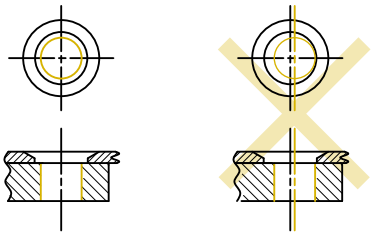

Aligned and centered holes　　Misaligned holes

Fig. B

- Tightening the screw beyond the recommended screw torque could deform or split the frame.
- With flat-head screws, failure to use the recommended pilot hole shape will cause interference between the flat-head screw and fan frame which could split the frame.

Recommended screw manufacturer

To purchase the screws, please contact the screw manufacturer directly.

SAIMA CORPORATION
2-9-17 Tsujido Fujisawa Kanagawa 251-0047 JAPAN
TEL:+81-466-36-3656 FAX:+81-466-36-0009
https://www.saima.co.jp/en/top.php

Safety Precautions Fan

- To ensure that this fan is used safely, be sure that you read and understand the following precautions fully and use it only as directed.
- Be sure to read these Safety Precautions carefully before installing, connecting, operating, maintaining, or inspecting the fan. Follow all the precautions and directions given here.
- The fan has been designed and manufactured for built-in use in general industrial machinery, and might not be used otherwise.
- The fan falls into the Category 16 (Class 84, Item 14) of the Appended Table 1 of the Export Trade Control Order. When exporting the fan either as a standalone item or as part of another product, be sure to implement the necessary procedures including the "Informed Cases" and "Objective Cases" based on the "Catch-All Controls" defined by the Ministry of Economy, Trade and Industry of Japan.
- When disposing the fan, treat it as industrial waste. For instructions on proper disposal methods, please contact local government authorities.
- When using the fan in equipment that could affect people's lives or health, that is used on a car, ship, or aircraft, or that could have a major impact on society or on the public, use it at your own discretion only after deploying sufficient safety measures and making prior evaluation.
- Fully understand the Safety Precautions described in this document before using the product. SANYO DENKI will not be liable for any accidents resulting in death, injury, or property damage due to the failure of the fan.

Safety precautions necessary for preventing any possible bodily injury or damage to property or equipment are ranked in two levels:

⚠ **Warning**	Denotes hazards which could cause severe bodily injury or death as a result of incorrect operation.
⚠ **Caution**	Denotes hazards which could cause bodily injury or property damage as a result of incorrect operation.

Note: Even those items marked **'Caution'** might also result in serious consequences depending on the situation. Be sure to observe them carefully to the same extent as items marked **'Warning.'**

Descriptions of the precautions to be taken to ensure safety are given below.

⚠ Warning

- When using the fan in the following equipment, use it at your own discretion only after deploying sufficient safety measures and making prior evaluation.
  - Equipment that could affect people's lives or health
  - Equipment that is used on a car, ship, or aircraft
  - Equipment that could have a major impact on society or on the public

  SANYO DENKI will not be liable for any accidents involving human casualties (death, injury, etc.) or property damage due to the failure of the fan while use in such equipment.
- Ensure that wiring is done correctly. Failure to do so might result in fire, burns, or electrical shock.
- If there are any grounding taps or wires, ground them securely. Failure to do so might result in electric shock.
- Never use in explosive atmospheres, as doing so might result in fires, burns, or bodily injury.
- Do not operate the fan with live parts exposed. Doing so might result in electric shock.
- Never allow any persons or objects to approach or come into contact with the fan's rotor while in operation, as doing so might result in damage or personal injury.
- Turn off the power and stop using the fan immediately if you notice any sparks, smoke, odd odors or sounds, or anything unusual during operation. Failure to do so might result in fire, bodily injury, or electrical shock.
- Never allow the fan to fall, topple over, or be subjected to excessive shocks when moving it. Doing so might result in product failure or performance deterioration.
- The fan should be handled by technically qualified personnel or someone with sufficient expertise; the personnel shall be assigned at your own discretion.
- Never attempt to disassemble, repair, or alter the fan in any way, as doing so might result in electrical shock, fire, or bodily injury.

⚠ Caution

Handling

- Installation, mounting, connections, wiring, and relocation of the fan should be done by technically qualified personnel or someone with sufficient expertise; the personnel shall be assigned at your own discretion. Never perform such work while the product is on, as this might lead to injury, electrical shock, burns, or fire.
- Do not operate the fan if it is not secured, nor while held in hand.
- Never allow yourself to come into contact with the fan when measuring insulation resistance or dielectric strength. There is danger of electric shock.
- Never attempt to disassemble or alter the fan in any way. Doing so might not only result in substandard performance, but also fire, burns, bodily injury, or electrical shock.

Operation

- Take protective measures for the equipment in which the fan is embedded in case the fan stops, malfunctions, or fails during operation.
- Never use the fan at voltages, temperatures, or any other parameters exceeding those given in the product specifications. Otherwise, it might result in substandard performance, failure, fire, bodily injury, or electrical shock.
- Any specifications not listed in document, such as fan and sensor operation after the fan power is turned off, will not be covered by our warranty. Please contact us in advance if you need to make any special arrangements for the specifications not listed in document.
- Using a power supply with insufficient capacity might result in faulty fan operation because an inrush current several times larger than the rated current will flow at the moment of fan startup. Be sure to use a power supply with sufficient capacity.
- Start all fans at the same time when two or more fans are positioned in equipment in a way that creates wind interference. If the fan is exposed to wind from other fans at startup, it might result in fan failure or faulty fan startup. Also, evaluate the influence to individual fans in advance and use them at your own discretion.
- Never connect or disconnect lead wires, plug cords, or connectors while the power is on. Be sure to connect or disconnect them while holding the frame only after power-off. Otherwise, it might result in fan damage or electrical shock.
- Do not remove the lead wire of the fan from the frame hook. Doing so might scratch and damage the surface of the lead wire.

· Do not remove the nameplate. Doing so might result in fan failure or electrical shock.
· Do not press down hard on the nameplate of the fan. Otherwise, the nameplate might break or come into contact with the shaft, hindering proper operation.
· The fan might be damaged or burned out if foreign objects or external forces hinder normal fan operation.
· Do not use the power supply's PWM to control the speed of the fan. Doing so might result in fan malfunction.
· Do not turn the power on or off on the negative power line. Doing so might damage the fan.
· Turning the power on and off frequently or turning the power back on before the fan comes to a complete stop might result in fan failure or damage. Before conducting such operations, fully evaluate the equipment in which the fan is embedded.
· The IP ratings of Splash Proof Fans apply only to the live electric parts and motor coils of the fan in accordance with IEC 60529. The protection does not apply to the non-live parts of the fan. If the fan is to be used for a long period of time in an environment subject to dust, water, or condensation, take measures required for the operating environment.
· Do not wash the fan during maintenance of equipment. Doing so might result in failure of the fan.
· For DC fans, even if the positive and negative lead wires of the power supply are connected in reverse, the fan will not be affected by the motor protection function. However, when wiring fans with sensors or PWM speed control function, connecting positive and negative leads in reverse may damage the fans.

Installation (Common to All Fans)

· Install and secure the fan properly with its weight and vibration during operation taken into account. Failure to do so might result in bodily injury or equipment failure due to the fan or its parts falling off.
· Ensure that the fan is installed in the right orientation. Failure to do so might result in bodily injury or equipment failure.
· For the fan to perform to its full capacity, secure air vents and take measures to prevent foreign objects from entering the fan. Failure to do so might result in bodily injury or fan failure.
· Do not subject the fan to excessive shock. Doing so might result in failure or substandard performance of the fan.
· Pulling or pinching lead wires might result in damage and stress to the wire. Also, make connections so that the lead wires do not come into contact with the rotating blades. Failure to do so might result in equipment failure or electrical shock.
· Take proper precautions against static electricity when wiring. Failure to do so might cause failure of the fan or equipment.
· Take safety measures such as installing a finger guard and displaying a warning symbol if there is any danger of fingers or objects coming into contact with the rotating blades. Failure to do so might result in bodily injury or fan failure.
· When installing an inlet nozzle, finger guard, filter, or base plate to the fan, ensure that they are positioned correctly according to Product Specification and other documents so that they do not come into contact with the rotating blades. Also, use the fan only after checking that the rotating blades do not come into contact with anything. Otherwise, it might result in equipment failure.
· Please use only genuine SANYO DENKI inlet nozzles and finger guards.
· Make connections correctly in accordance with the information of Product Specification and the nameplate of the fan. Failure to do so might result in equipment failure or the malfunction, failure, or performance degradation of the fan.

Installation (Axial Fan and Blower)

· When mounting the fan with screws, make sure that the screw and base plate will not deform the frame of the fan before mounting. A deformed frame might result in failure or substandard performance of the fan.
· When mounting the fan with screws, ensure that the screw tightening torque is correct. If the tightening torque exceeds the recommended torque, the fan frame might be deformed or damaged. Choose a ribbed frame model if mounting fans with plastic frames through both sides of the frame with through-screws. To prevent loose screws, use plain washers or spring washers. For the screwing torque of each fan type, contact SANYO DENKI or a SANYO DENKI distributor.
· Note that mounting the fan with self-tapping screws might damage the fan frame.
If using self-tapping screws, be sure to choose the screw that we recommend and conduct evaluations before using it.

Installation (Centrifugal Fan)

· The fan shall be mounted with screws. For the screw size for each fan model, see Product Specification.
· Choose screws with the right length with information such as the fan mounting depth and base plate thickness taken into account. Failure to do so might result in stripped screw holes and improper fan mounting. For the mounting depth of each fan model, see Product Specification.
· Ensure that the screw tightening torque is correct. If the tightening torque exceeds the recommended torque, the screw hole might be deformed or damaged. Also, to prevent loose screws, use plain washers or spring washers. For the tightening torque for each fan model, see Product Specification.
· For the inlet nozzle and base plate installation dimensions for each fan model, see Product Specification.

Operating Environments

· Avoid using or storing the fan in the following environments. Otherwise, it might result in fire or the failure or performance degradation of the fan.
In environments where flammable or corrosive gas is present, where water or oil splashes, where there is much dust or humidity, where condensation occurs, where exposed to radioactive rays or direct sunlight, where a salty sea breeze blows or seawater splashes, where the fan might be contaminated by such corrosive materials as sulfurous water, sulfurous volcanic ash, organic solvents, acidic and alkali chemicals, or nuclear fuel materials, where subjected to constant vibration, strong shocks, centrifugal force, acceleration, or strong magnetic force, where electromagnetic noise radiation is present, where the electromagnetic noise overlaps into power voltage, or where subjected to rapid environmental fluctuations (temperature, humidity, pressure, etc.).

Storage

· The fan should be stored in packaging.
· Ensure that the fan is stored in the following environments where:
- the temperature is normal and stable;
- the relative humidity is 20 to 85% with no sudden changes in humidity and no condensation;
- not subjected to direct sunlight;
- not subjected to water, oil, corrosive materials, or other hazardous substances;
- and not subjected to vibration or shock.

Maintenance

· Maintenance and inspections of the fan should be done by technically qualified personnel or someone with sufficient expertise; the personnel shall be assigned at your own discretion. Otherwise, it might result in fire, burns, bodily injury, or electrical shock.
· Never perform any maintenance or inspections while the fan is in operation. Also note that the blades continue to rotate for some time immediately after operation ceases. Always confirm that all rotating parts have come to a stop before beginning work. Failure to do so might result in bodily injury.
· Never use gasoline, paint thinner, benzene, or any other organic solvents to clean the fan. Also, avoid placing excessive stresses on the fan. Otherwise, it might result in product deformation or performance degradation.

Safety Precautions San Ace Controller

Please read instruction manual and its appendix carefully prior to installation, operation, maintenance or inspection and perform all tasks according to the instructions provided here.
A good understanding of this equipment, its safety information as well as all Warnings/Cautions is also necessary prior to operation.
Matters that require attention are ranked as "Warning" and "Caution" in this document.

Warning Symbol:

⚠ **Warning**	Denotes hazards which could cause severe bodily injury or death as a result of incorrect operation.
⚠ **Caution**	Denotes hazards which could cause bodily injury or property damage as a result of incorrect operation.

Note: Even those items marked **'Caution'** might also result in serious consequences depending on the situation. Be sure to observe them carefully to the same extent as items marked **'Warning.'**

⚠ Warning

- When using the product in the following equipment, use it at your own discretion only after deploying sufficient safety measures and making prior evaluation.
  - Equipment that could affect people's lives or health
  - Equipment that is used on a car, ship, or aircraft
  - Equipment that could have a major impact on society or on the public
  - SANYO DENKI will not be liable for any accidents involving human casualties (death, injury, etc.) or property damage due to the failure of the product while use in such equipment.
- Ensure that wiring is done correctly. Failure to do so might result in fire, burns, or electrical shock.
- Never use in explosive atmospheres, as doing so might result in fires, burns, or bodily injury.
- Do not operate the product with live parts exposed. Doing so might result in electric shock.
- Turn off the power and stop using the product immediately if you notice any sparks, smoke, odd odors or sounds, or anything unusual during operation. Failure to do so might result in fire, bodily injury, or electrical shock.
- Never allow the product to fall, topple over, or be subjected to excessive shocks when moving it. Doing so might result in product failure or performance deterioration.
- The product should be handled by technically qualified personnel or someone with sufficient expertise; the personnel shall be assigned at your own discretion.
- Never attempt to disassemble, repair, or alter the product in any way, as doing so might result in electrical shock, fire, or bodily injury.

⚠ Caution

Handling

- Installation, mounting, connections, wiring, and relocation of the product should be done by technically qualified personnel or someone with sufficient expertise; the personnel shall be assigned at your own discretion. Never perform such work while the product is on, as this might lead to injury, electrical shock, burns, or fire.
- Never allow yourself to come into contact with the product when measuring insulation resistance or dielectric strength. There is danger of electric shock.
- Never attempt to disassemble or alter the product in any way. Doing so might not only result in substandard performance, but also fire, burns, bodily injury, or electrical shock.

Operation

- Take protective measures for the equipment in which the product is embedded in case the product stops, malfunctions, or fails during operation.
- Never use the product at voltages, temperatures, or any other parameters exceeding those given in the product specifications. Otherwise, it might result in substandard performance, failure, fire, bodily injury, or electrical shock.
- Do not remove the nameplate. Do not install the product so that the identification cannot be seen after installation.
- Turn the power supply ON/OFF using the power switch on the product. Otherwise, it might result in product failure.
- Do not use the product with a negative power supply. Otherwise, it might result in product failure.
- Do not apply excessive force to the product while it is operating. Otherwise, it might result in product failure.

Installation

- When fixing the product into place, be sure to take into consideration the product's weight and all other relevant factors. Failure to do so might result in the product or its parts falling, resulting in bodily injury or device failure.
- Do not block the airflow openings of the product. Failure to do so might result in device failure, product failure, or product malfunction.
- When fixing the product with screws, ensure correct tightening torque. If the tightening torque is over the recommended values, the product structure might deform or break.
- Take proper precautions against static electricity when wiring. Failure to do so might cause failure of the product or equipment.
- Make connections correctly in accordance with the information of Instruction Manual and the nameplate of the product. Failure to do so might result in equipment failure or the malfunction, failure, or performance degradation of the product.
- Ensure that wires are fitted with insulation to prevent accidental short circuiting. Failure to do so might result in device failure, product failure, or product malfunction.

Operating environment

· Avoid using or storing the product in the following environments. Otherwise, it might result in fire or the failure or performance degradation of the product.
In environments where flammable or corrosive gas is present, where water or oil splashes, where there is much dust or humidity, where condensation occurs, where exposed to radioactive rays or direct sunlight, where a salty sea breeze blows or seawater splashes, where the product might be contaminated by such corrosive materials as sulfurous water, sulfurous volcanic ash, organic solvents, acidic and alkali chemicals, or nuclear fuel materials, where subjected to constant vibration, strong shocks, centrifugal force, acceleration, or strong magnetic force, where electromagnetic noise radiation is present, where the electromagnetic noise overlaps into power voltage, or where subjected to rapid environmental fluctuations (temperature, humidity, pressure, etc.).

Storage

· The product should be stored in packaging.
· Ensure that the product is stored in the following environments where:
- the temperature is normal and stable;
- the relative humidity is 20 to 85% with no sudden changes in humidity and no condensation;
- not subjected to direct sunlight;
- not subjected to water, oil, corrosive materials, or other hazardous substances;
- and not subjected to vibration or shock.

Maintenance

· Maintenance and inspections of the product should be done by technically qualified personnel or someone with sufficient expertise; the personnel shall be assigned at your own discretion. Otherwise, it might result in fire, burns, bodily injury, or electrical shock.
· Perform maintenance or inspections while the product is off. Otherwise, it might result in fire, burns, bodily injury, or electrical shock.
· Never use gasoline, paint thinner, benzene, or any other organic solvents to clean the product. Also, avoid placing excessive stresses on the product. Otherwise, it might result in product deformation or performance degradation.

Radio wave

· Disassembling or altering the radio wave circuit of this product might be punishable by law.
· This product uses a frequency band of 2.4 GHz to transmit radio waves. Radio wave interference might occur if this product is used in the vicinity of the following equipment or a radio station.
- Industrial, scientific, or medical equipment (such as microwave ovens, wireless LAN devices, security devices, or cardiac pacemakers)
- Radio stations for which no license is required (specific power-saving radio stations)
- Radio stations for which a license is required (local wave stations used on factory production lines, etc. to identify moving objects, or amateur radio stations)
· If this product affects a cardiac pacemaker or other medical equipment, immediately turn OFF the power to this product.
· Do not use this product in the vicinity of a microwave oven, in a location where static electricity or electromagnetic interference occurs, or in a room shielded by metallic doors. Radio waves might not reach the target device depending on the environment.

Other Precautions

· This product falls into the category of the products specified in the Appended Table 1, Item 16 (Class 90, Item 32) of the Export Trade Control Order. To export the product as an individual part or to export a product into which the product is assembled, the "Informed Condition" and "Objective Condition" that the Ministry of Economy, Trade and Industry of Japan established based on the "Catch-All Controls" must be studied for applicability. Accordingly, appropriate export formalities must be performed.
· When disposing the product, treat it as industrial waste. Please contact your local government office for further details about disposal.

Safety Precautions PWM Controller

Box type

- To ensure that this product is used safely, be sure that you read and understand the following precautions fully and use it only as directed.
- Be sure to read these Safety Precautions carefully before installing, connecting, operating, maintaining, or inspecting the product. Follow all the precautions and directions given here.
- The product has been designed and manufactured for built-in use in general industrial machinery, and might not be used otherwise.
- The product falls into the Category 16 (Class 85, Item 43) of the Appended Table 1 of the Export Trade Control Order. When exporting the product either as a standalone item or as part of another product, be sure to implement the necessary procedures including the "Informed Cases" and "Objective Cases" based on the "Catch-All Controls" defined by the Ministry of Economy, Trade and Industry of Japan.
- When disposing the product, treat it as industrial waste. For instructions on proper disposal methods, please contact local government authorities.
- When using the product in equipment that could affect people's lives or health, that is used on a car, ship, or aircraft, or that could have a major impact on society or on the public, use it at your own discretion only after deploying sufficient safety measures and making prior evaluation.
- Fully understand the Safety Precautions described in this document before using the product. SANYO DENKI will not be liable for any accidents resulting in death, injury, or property damage due to the failure of the product.

Safety precautions necessary for preventing any possible bodily injury or damage to property or equipment are ranked in two levels:

⚠ **Warning**	Denotes hazards which could cause severe bodily injury or death as a result of incorrect operation.
⚠ **Caution**	Denotes hazards which could cause bodily injury or property damage as a result of incorrect operation.

Note: Even those items marked **'Caution'** might also result in serious consequences depending on the situation. Be sure to observe them carefully to the same extent as items marked **'Warning.'**

⚠ Warning

- When using the product in the following equipment, use it at your own discretion only after deploying sufficient safety measures and making prior evaluation.
  - Equipment that could affect people's lives or health
  - Equipment that is used on a car, ship, or aircraft
  - Equipment that could have a major impact on society or on the public
  - SANYO DENKI will not be liable for any accidents involving human casualties (death, injury, etc.) or property damage due to the failure of the product while use in such equipment.
- Ensure that wiring is done correctly. Failure to do so might result in fire, burns, or electrical shock.
- Never use in explosive atmospheres, as doing so might result in fires, burns, or bodily injury.
- Do not operate the product with live parts exposed. Doing so might result in electric shock.
- Turn off the power and stop using the product immediately if you notice any sparks, smoke, odd odors or sounds, or anything unusual during operation. Failure to do so might result in fire, bodily injury, or electrical shock.
- Never allow the product to fall, topple over, or be subjected to excessive shocks when moving it. Doing so might result in product failure or performance deterioration.
- The product should be handled by technically qualified personnel or someone with sufficient expertise; the personnel shall be assigned at your own discretion.
- Never attempt to disassemble, repair, or alter the product in any way, as doing so might result in electrical shock, fire, or bodily injury.

⚠ Caution

Handling

- Installation, mounting, connections, wiring, and relocation of the product should be done by technically qualified personnel or someone with sufficient expertise; the personnel shall be assigned at your own discretion. Never perform such work while the product is on, as this might lead to injury, electrical shock, burns, or fire.
- Never allow yourself to come into contact with the product when measuring insulation resistance or dielectric strength. There is danger of electric shock.
- Never attempt to disassemble or alter the product in any way. Doing so might not only result in substandard performance, but also fire, burns, bodily injury, or electrical shock.

Operation

- Take protective measures for the equipment in which the product is embedded in case the product stops, malfunctions, or fails during operation.
- Never use the product at voltages, temperatures, or any other parameters exceeding those given in the product specifications. Otherwise, it might result in substandard performance, failure, fire, bodily injury, or electrical shock.
- Do not remove the nameplate. Doing so might result in product failure or electrical shock.
- Do not turn the power on or off on the negative power line. Doing so might damage the product.
- Do not apply excessive force to the product while it is operating. Otherwise, it may result in product failure.

Installation

· When fixing the product into place, be sure to take into consideration the product's weight and all other relevant factors. Failure to do so may result in the product or its parts falling, resulting in bodily injury or device failure.
· Never install or remove the product while it is wired.
· When fixing the product with screws, ensure correct tightening torque. If the tightening torque is over the recommended values, the product structure may deform or break.
· Take proper precautions against static electricity when wiring. Failure to do so might cause failure of the product or equipment.
· Make connections correctly in accordance with the information of Instruction Manual and the nameplate of the product. Failure to do so might result in equipment failure or the malfunction, failure, or performance degradation of the product.
· Ensure that wires are fitted with insulation to prevent accidental short-circuiting. Failure to do so may result in device failure, product failure, or product malfunction.

Operating Environments

· Avoid using or storing the product in the following environments. Otherwise, it might result in fire or the failure or performance degradation of the product.
In environments where flammable or corrosive gas is present, where water or oil splashes, where there is much dust or humidity, where condensation occurs, where exposed to radioactive rays or direct sunlight, where a salty sea breeze blows or seawater splashes, where the product might be contaminated by such corrosive materials as sulfurous water, sulfurous volcanic ash, organic solvents, acidic and alkali chemicals, or nuclear fuel materials, where subjected to constant vibration, strong shocks, centrifugal force, acceleration, or strong magnetic force, where electromagnetic noise radiation is present, where the electromagnetic noise overlaps into power voltage, or where subjected to rapid environmental fluctuations (temperature, humidity, pressure, etc.).

Storage

· The product should be stored in packaging.
· Ensure that the product is stored in the following environments where:
- the temperature is normal and stable;
- the relative humidity is 20 to 85% with no sudden changes in humidity and no condensation;
- not subjected to direct sunlight;
- not subjected to water, oil, corrosive materials, or other hazardous substances;
- and not subjected to vibration or shock.

Maintenance

· Maintenance and inspections of the product should be done by technically qualified personnel or someone with sufficient expertise; the personnel shall be assigned at your own discretion. Otherwise, it might result in fire, burns, bodily injury, or electrical shock.
· Perform maintenance or inspections while the product is off. Otherwise, it may result in fire, burns, bodily injury, or electrical shock.
· Never use gasoline, paint thinner, benzene, or any other organic solvents to clean the product. Also, avoid placing excessive stresses on the product. Otherwise, it might result in product deformation or performance degradation.

Safety Precautions PWM Controller

PCB type

- To ensure that this product is used safely, be sure that you read and understand the following precautions fully and use it only as directed.
- Be sure to read these Safety Precautions carefully before installing, connecting, operating, maintaining, or inspecting the product. Follow all the precautions and directions given here.
- The product has been designed and manufactured for built-in use in general industrial machinery, and might not be used otherwise.
- The product falls into the Category 16 (Class 85, Item 43) of the Appended Table 1 of the Export Trade Control Order. When exporting the product either as a standalone item or as part of another product, be sure to implement the necessary procedures including the "Informed Cases" and "Objective Cases" based on the "Catch-All Controls" defined by the Ministry of Economy, Trade and Industry of Japan.
- When disposing the product, treat it as industrial waste. For instructions on proper disposal methods, please contact local government authorities.
- When using the product in equipment that could affect people's lives or health, that is used on a car, ship, or aircraft, or that could have a major impact on society or on the public, use it at your own discretion only after deploying sufficient safety measures and making prior evaluation.
- Fully understand the Safety Precautions described in this document before using the product. SANYO DENKI will not be liable for any accidents resulting in death, injury, or property damage due to the failure of the product.

Safety precautions necessary for preventing any possible bodily injury or damage to property or equipment are ranked in two levels:

⚠ **Warning**	Denotes hazards which could cause severe bodily injury or death as a result of incorrect operation.
⚠ **Caution**	Denotes hazards which could cause bodily injury or property damage as a result of incorrect operation.

Note: Even those items marked **'Caution'** might also result in serious consequences depending on the situation. Be sure to observe them carefully to the same extent as items marked **'Warning.'**

⚠ Warning

- When using the product in the following equipment, use it at your own discretion only after deploying sufficient safety measures and making prior evaluation.
  - Equipment that could affect people's lives or health
  - Equipment that is used on a car, ship, or aircraft
  - Equipment that could have a major impact on society or on the public
  - SANYO DENKI will not be liable for any accidents involving human casualties (death, injury, etc.) or property damage due to the failure of the product while use in such equipment.
- Ensure that wiring is done correctly. Failure to do so might result in fire, burns, or electrical shock.
- Never use in explosive atmospheres, as doing so might result in fires, burns, or bodily injury.
- Do not operate the product with live parts exposed. Doing so might result in electric shock.
- Only use the product integrated with another device or system. Failure to do so may result in burns or electrical shock.
- Do not touch the product while it is operating. Otherwise, it may result in burns or electrical shock.
- Turn off the power and stop using the product immediately if you notice any sparks, smoke, odd odors or sounds, or anything unusual during operation. Failure to do so might result in fire, bodily injury, or electrical shock.
- Never allow the product to fall, topple over, or be subjected to excessive shocks when moving it. Doing so might result in product failure or performance deterioration.
- The product should be handled by technically qualified personnel or someone with sufficient expertise; the personnel shall be assigned at your own discretion.
- Never attempt to disassemble, repair, or alter the product in any way, as doing so might result in electrical shock, fire, or bodily injury.

⚠ Caution

Handling

- Discharge static electricity from your body before handling the product. In addition, avoid packaging or covering the product with materials which generate static electricity. Contact with static electricity may result in product failure.
- Do not touch solder joints or pins. Otherwise, it may result in bodily injury.
- Installation, mounting, connections, wiring, and relocation of the product should be done by technically qualified personnel or someone with sufficient expertise; the personnel shall be assigned at your own discretion. Never perform such work while the product is on, as this might lead to injury, electrical shock, burns, or fire.
- Never allow yourself to come into contact with the product when measuring insulation resistance or dielectric strength. There is danger of electric shock.
- Never attempt to disassemble or alter the product in any way. Doing so might not only result in substandard performance, but also fire, burns, bodily injury, or electrical shock.

Operation

- Do not touch the product for a period after the power has been turned off as it may still be hot. Otherwise, it may result in burns.
- Take protective measures for the equipment in which the product is embedded in case the product stops, malfunctions, or fails during operation.
- Never use the product at voltages, temperatures, or any other parameters exceeding those given in the product specifications. Otherwise, it might result in substandard performance, failure, fire, bodily injury, or electrical shock.
- Do not remove the nameplate. Doing so might result in product failure or electrical shock.
- Do not turn the power on or off on the negative power line. Doing so might damage the product.
- Do not apply excessive force to the product while it is operating. Otherwise, it may result in product failure.

Installation

· When fixing the product into place, be sure to take into consideration the product's weight and all other relevant factors. Failure to do so may result in the product or its parts falling, resulting in bodily injury or device failure.
· Never install or remove the product while it is wired.
· When fixing the product with screws, ensure correct tightening torque. If the tightening torque is over the recommended values, the product structure may deform or break.
· Install the product carefully without touching conductors or other electrical components. Touching these components may result in device failure, product failure, or product malfunction.
· Take proper precautions against static electricity when wiring. Failure to do so might cause failure of the product or equipment.
· Make connections correctly in accordance with the information of Instruction Manual and the nameplate of the product. Failure to do so might result in equipment failure or the malfunction, failure, or performance degradation of the product.
· Ensure that wires are fitted with insulation to prevent accidental short-circuiting. Failure to do so may result in device failure, product failure, or product malfunction.

Operating Environments

· Avoid using or storing the product in the following environments. Otherwise, it might result in fire or the failure or performance degradation of the product.
In environments where flammable or corrosive gas is present, where water or oil splashes, where there is much dust or humidity, where condensation occurs, where exposed to radioactive rays or direct sunlight, where a salty sea breeze blows or seawater splashes, where the product might be contaminated by such corrosive materials as sulfurous water, sulfurous volcanic ash, organic solvents, acidic and alkali chemicals, or nuclear fuel materials, where subjected to constant vibration, strong shocks, centrifugal force, acceleration, or strong magnetic force, where electromagnetic noise radiation is present, where the electromagnetic noise overlaps into power voltage, or where subjected to rapid environmental fluctuations (temperature, humidity, pressure, etc.).

Storage

· The product should be stored in packaging.
· Ensure that the product is stored in the following environments where:
- the temperature is normal and stable;
- the relative humidity is 20 to 85% with no sudden changes in humidity and no condensation;
- not subjected to direct sunlight;
- not subjected to water, oil, corrosive materials, or other hazardous substances;
- and not subjected to vibration or shock.

Maintenance

· Maintenance and inspections of the product should be done by technically qualified personnel or someone with sufficient expertise; the personnel shall be assigned at your own discretion. Otherwise, it might result in fire, burns, bodily injury, or electrical shock.
· Perform maintenance or inspections while the product is off. Otherwise, it may result in fire, burns, bodily injury, or electrical shock.
· Never use gasoline, paint thinner, benzene, or any other organic solvents to clean the product. Also, avoid placing excessive stresses on the product. Otherwise, it might result in product deformation or performance degradation.

Safety Precautions Airflow Tester

Please read the instruction manual and its appendix carefully prior to installation, operation, maintenance or inspection and perform all tasks according to the instructions provided here.
A good understanding of this equipment, its safety information as well as all Warnings/Cautions is also necessary prior to operation.
Matters that require attention are ranked as "Danger", "Warning", and "Caution" in this document.

Warning symbols

⚠ Warning	Denotes immediate hazards which could cause severe bodily injury or death as a result of incorrect operation.
⚠ Caution	Denotes hazards which could cause bodily injury and product or property damage as a result of incorrect operation.

⚠ **Caution** Even those hazards denoted by this symbol could lead to a serious accident. Make sure to strictly follow these safety precautions.

Prohibited, mandatory symbols

⃠	Indicates actions that must not be allowed to occur / prohibited actions.
❗	Indicates actions that must be carried out / mandatory actions.

⚠ Warning

Operating precautions

- Avoid using the product in the presence of flammable, explosive, or corrosive gases, locations subjected to splashing water or oil, or near combustibles. Otherwise, it may result in electric shock, bodily injury, fire, product failure, or damage.
- Turn off the power before performing any wiring, maintenance, or inspection. Once the power is off, remove the AC power cable, and confirm that the POWER LED is off before performing these tasks. Failure to do so may result in electric shock.
- Operate the product with dry hands. Failure to do so may result in electric shock.
- Never attempt to disassemble or alter the product in any way. Otherwise, it may result in electric shock, bodily injury, fire, product failure, or damage.
- Do not damage the AC power cable. Otherwise, it may result in electric shock, bodily injury, fire, product failure, or damage.
- If the product emits unusual noise, odors, or smoke, or if water or other liquids enter the product, immediately turn off the power and disconnect the power cable. Otherwise, it may result in electric shock, bodily injury, fire, product failure, or damage.
- Read the instruction manual carefully prior to using the product. Failure to do so may result in electric shock, bodily injury, fire, product failure, or damage.
- Always use the supplied AC power cable if included. Using an AC power cable with inappropriate ratings may result in electric shock, bodily injury, fire, product failure, or damage.
- If an AC power cable is not included, please prepare a cable matching the specifications listed in section 9.2 "Specifications" of Instruction Manual. Using an AC power cable with inappropriate ratings may result in electric shock, bodily injury, fire, product failure, or damage.
- Prior to turning on the power, be sure to ground the product by connecting it to a grounded outlet. Insufficient grounding may result in electric shock, bodily injury, fire, product failure, or damage.

⚠ Caution

Operating precautions

- Avoid using the product near bodies of salt water or other locations susceptible to salt damage. Otherwise, it may result in product failure or damage caused by salt.
- Due to the internal power supply, certain sections of the product may experience an elevation in temperature that may cause a burn or bodily injury.
- Do not use the product outside its specifications. Otherwise, it may result in electric shock, bodily injury, fire, product failure, or damage.
- Do not use the product if it is defective, damaged, or burnt out. Otherwise, it may result in electric shock, bodily injury, or fire.
- When not using the product, turn off the power and unplug the AC power cable. Failure to do so may result in electric shock, bodily injury, fire, product failure, or damage.

Transportation

- Excess stacking may cause the load to collapse so follow the directions written on the outside box. Failure to do so may result in bodily injury or damage.
- Handle the product with care during transportation, as it is dangerous if dropped. Failure to do so may result in bodily injury.
- The product is heavy so handle with care. Failure to do so may result in bodily injury.

Handling

- Do not apply excessive stress or place heavy objects on the product. Otherwise, it may result in electric shock, bodily injury, product failure, or damage.
- Transport the product using the carrying handle. Failure to do so may result in bodily injury, product failure, or damage.
- Do not drop the product or subject it to excessive shock of any kind. Otherwise, it may result in product failure or damage.
- If the connection duct or tripod is attached to the main unit, make sure it does not tip over or drop while moving. Otherwise, it may result in bodily injury, product failure, or damage.
- Only use the product as specified in instruction manual. Failure to do so may result in product failure or damage.
- Make sure that the intake and exhaust vents are free of debris and foreign matter. Otherwise, it may result in bodily injury, product failure, or damage.
- Mount the product on incombustible material below 60°C. Failure to do so may result in fire, product failure, or damage.

Connecting the AC power cable

· Connect the AC power cable as instructed by the instruction manual. Failure to do so may result in electric shock, bodily injury, fire, product failure, or damage.

Operation

· Operate the product within the specified input-power voltage to maintain stability. Otherwise, it may result in electric shock, bodily injury, fire, product failure, or damage.
· The auxiliary fan rotates during operation. Make sure that the intake and exhaust vents are free of debris and foreign matter.
· Keep hands away from the exhaust vent. Failure to do so may result in bodily injury, fire, product failure, or damage.

Maintenance and inspection

· Some parts of the product (fan motor, gasket, electrolytic condenser, sensor, LED, switches) can deteriorate with long-term use. As preventive maintenance, perform periodic maintenance and inspection to maintain measuring accuracy. For details on maintenance, inspection, and repair, please contact SANYO DENKI. Disassembly is not to be performed by the end-user. Disassembly may result in electric shock, bodily injury, fire, malfunction, product failure, or damage.

Prohibited

Handling

· Do not scratch the connection duct with sharp objects as it may tear or damage the material.

Operation

· Applying voltage outside the input voltage range may result in electric shock, bodily injury, fire, product failure, or damage. Never use voltages outside of specification.
· Keep the USB serial adapter away from static electricity and high voltage. Failure to do so may result in failure or damage.
· Do not use a polarized grounding adapter with the product. Otherwise, it may result in electric shock, bodily injury, fire, product failure, or damage.

Storage

· Do not store the product where it could be exposed to rain, water, toxic gases, or other liquids. Failure to do so may result in product failure or damage.

Maintenance and inspection

· Do not perform disassembly, inspection, or repairs. Otherwise, it may result in electric shock, bodily injury, fire, product failure, or damage.
· Do not measure the insulation resistance or the pressure resistance. Otherwise, it may result in product failure or damage.
· Never unplug the AC power cable while the power is on as the resulting surge voltage may damage electronic components. Otherwise, it may result in electric shock, bodily injury, or fire.
· Do not remove the nameplate attached to the product. Doing so voids the warranty.
· Do not wipe the product with benzene, paint thinner, or other solvents. Otherwise, it may result in deformation, deterioration, discoloration, product failure, or damage.

Mandatory

Operation

· In the case of any irregular operation, stop the device immediately. Otherwise, it may result in electric shock, bodily injury, fire, product failure, or damage.
· As a provisional measure, ensure that the power can be turned off at any time. Inability to turn off the power may result in electric shock, bodily injury, fire, product failure, or damage.
· If an error occurs, eliminate the cause and ensure safety before resuming.
· Use the product within the specified temperature and humidity range. Failure to do so may result in product failure or damage.
  Temperature: 0 to 40°C / Humidity 20 to 85% RH (non-condensing)
· Be sure to use the supplied AC power cable to prevent electric shock, bodily injury, fire, product failure, or damage.
· Be sure to prepare a cable matching the ratings listed in section 9.2 "Specifications" of Instruction Manual to prevent electric shock, bodily injury, fire, product failure, or damage.
· Prior to turning on the power, be sure to ground the product by connecting it to a grounded outlet to prevent electric shock, bodily injury, fire, product failure, or damage.

Storage

· Store the product in a location that is not exposed to direct sunlight, at a temperature and humidity within specifications. Failure to do so may result in product failure.
· If the product has been stored for a long period, contact SANYO DENKI. There is the possibility that components may have deteriorated and require maintenance.

Disposal

· When disposing of the product, treat it as industrial waste.

Model Index in Ascending Order - DC Fans

Models listed in product pages	List of models (The models listed on the right of the models listed in product pages are option models. Option models may not necessarily comply with the same standards as the models listed in product pages. Contact us for details of the "—" models.)				Frame size	Rib	page
	Without sensor	With pulse sensor	With lock sensor	With PWM control and pulse sensor			
109BC12FC7-1	» 109BC12FA7-1	» 109BC12FC7-1	» 109BC12FD7-1	—	52 × 15 mm	—	466
109BC12GC7-1	» 109BC12GA7-1	» 109BC12GC7-1	» 109BC12GD7-1	—	52 × 15 mm	—	466
109BC12HC7-1	» 109BC12HA7-1	» 109BC12HC7-1	» 109BC12HD7-1	—	52 × 15 mm	—	466
109BC12MC7-1	» 109BC12MA7-1	» 109BC12MC7-1	» 109BC12MD7-1	—	52 × 15 mm	—	466
109BC24FC7-1	» 109BC24FA7-1	» 109BC24FC7-1	» 109BC24FD7-1	—	52 × 15 mm	—	466
109BC24GC7-1	» 109BC24GA7-1	» 109BC24GC7-1	» 109BC24GD7-1	—	52 × 15 mm	—	466
109BC24HC7-1	» 109BC24HA7-1	» 109BC24HC7-1	» 109BC24HD7-1	—	52 × 15 mm	—	466
109BD12FC2	» 109BD12FA2	» 109BD12FC2	» 109BD12FD2	—	76 × 30 mm	—	470
109BD12HC2	» 109BD12HA2	» 109BD12HC2	» 109BD12HD2	109BD12P2H01	76 × 30 mm	—	470
109BD12MC2	» 109BD12MA2	» 109BD12MC2	109BD12MD2	—	76 × 30 mm	—	470
109BD24FC2	109BD24FA2	» 109BD24FC2	109BD24FD2	—	76 × 30 mm	—	470
109BD24HC2	109BD24HA2	» 109BD24HC2	» 109BD24HD2	—	76 × 30 mm	—	470
109BD24MC2	109BD24MA2	» 109BD24MC2	» 109BD24MD2	—	76 × 30 mm	—	470
109BG12HC1	» 109BG12HA1	» 109BG12HC1	» 109BG12HD1	—	160 × 40 mm	—	486
109BG12MC1	» 109BG12MA1	» 109BG12MC1	109BG12MD1	—	160 × 40 mm	—	486
109BG24HC1	» 109BG24HA1	» 109BG24HC1	» 109BG24HD1	—	160 × 40 mm	—	486
109BG24MC1	109BG24MA1	» 109BG24MC1	109BG24MD1	—	160 × 40 mm	—	486
109BJ12HC2	» 109BJ12HA2	» 109BJ12HC2	109BJ12HD2	—	127 × 32 mm	—	484
109BJ12MC2	» 109BJ12MA2	» 109BJ12MC2	109BJ12MD2	—	127 × 32 mm	—	484
109BJ24HC2	109BJ24HA2	» 109BJ24HC2	» 109BJ24HD2	—	127 × 32 mm	—	484
109BJ24MC2	» 109BJ24MA2	109BJ24MC2	109BJ24MD2	—	127 × 32 mm	—	484
109BM12GC2-1	109BM12GA2-1	109BM12GC2-1	109BM12GD2-1	—	97 × 33 mm	—	480
109BM12HC2-1	109BM12HA2-1	109BM12HC2-1	109BM12HD2-1	—	97 × 33 mm	—	480
109BM12MC2-1	109BM12MA2-1	109BM12MC2-1	109BM12MD2-1	109BM12P2M01	97 × 33 mm	—	480
109BM24GC2-1	109BM24GA2-1	109BM24GC2-1	109BM24GD2-1	—	97 × 33 mm	—	480
109BM24HC2-1	109BM24HA2-1	109BM24HC2-1	109BM24HD2-1	—	97 × 33 mm	—	480
109BM24MC2-1	109BM24MA2-1	109BM24MC2-1	109BM24MD2-1	—	97 × 33 mm	—	480
109E1712F501	109E1712F502	109E1712F501	109E1712F5D01	—	Ø172 × 51 mm	No	200
109E1712H501	» 109E1712H502	» 109E1712H501	109E1712H5D01	—	Ø172 × 51 mm	No	200
109E1712K501	109E1712K502	» 109E1712K501	—	—	Ø172 × 51 mm	No	200
109E1712M501	109E1712M502	» 109E1712M501	—	—	Ø172 × 51 mm	No	200
109E1712Y501	109E1712Y502	109E1712Y501	—	—	Ø172 × 51 mm	No	200
109E1724C501	109E1724C502	» 109E1724C501	109E1724C5D01	9EH1724P5C01	Ø172 × 51 mm	No	200
109E1724F501	109E1724F502	109E1724F501	109E1724F5D01	—	Ø172 × 51 mm	No	200
109E1724H501	» 109E1724H502	» 109E1724H501	» 109E1724H5D01	—	Ø172 × 51 mm	No	200
109E1724K501	» 109E1724K502	» 109E1724K501	» 109E1724K5D01	—	Ø172 × 51 mm	No	200
109E1724M501	» 109E1724M502	» 109E1724M501	109E1724M5D01	—	Ø172 × 51 mm	No	200
109E1748C501	109E1748C502	» 109E1748C501	—	—	Ø172 × 51 mm	No	200
109E1748F501	109E1748F502	109E1748F501	—	—	Ø172 × 51 mm	No	200
109E1748H501	109E1748H502	» 109E1748H501	109E1748H5D01	—	Ø172 × 51 mm	No	200
109E1748K501	109E1748K502	109E1748K501	—	109E1748P5K03	Ø172 × 51 mm	No	200
109E1748M501	109E1748M502	109E1748M501	—	—	Ø172 × 51 mm	No	200
109E4712L401	109E4712L402	109E4712L401	109E4712L4D01	—	Ø172 × 147 × 25 mm	No	189
109E4712M401	109E4712M402	109E4712M401	109E4712M4D01	—	Ø172 × 147 × 25 mm	No	189
109E4724F401	109E4724F402	109E4724F401	109E4724F4D01	—	Ø172 × 147 × 25 mm	No	189
109E4724H401	109E4724H402	109E4724H401	109E4724H4D01	—	Ø172 × 147 × 25 mm	No	189
109E4724L401	109E4724L402	109E4724L401	109E4724L4D01	—	Ø172 × 147 × 25 mm	No	189
109E4724M401	109E4724M402	109E4724M401	109E4724M4D01	—	Ø172 × 147 × 25 mm	No	189
109E4748F401	109E4748F402	109E4748F401	109E4748F4D01	—	Ø172 × 147 × 25 mm	No	189
109E4748H401	109E4748H402	109E4748H401	109E4748H4D01	—	Ø172 × 147 × 25 mm	No	189
109E4748L401	109E4748L402	109E4748L401	109E4748L4D01	—	Ø172 × 147 × 25 mm	No	189
109E4748M401	109E4748M402	109E4748M401	109E4748M4D01	—	Ø172 × 147 × 25 mm	No	189
109E4748S401	109E4748S402	109E4748S401	109E4748S4D01	—	Ø172 × 147 × 25 mm	No	189
109E5712F501	109E5712F502	109E5712F501	—	—	Ø172 × 150 × 51 mm	No	197
109E5712H501	» 109E5712H502	» 109E5712H501	109E5712H5D01	—	Ø172 × 150 × 51 mm	No	197
109E5712K501	109E5712K502	» 109E5712K501	109E5712K5D01	109E5712P5K04	Ø172 × 150 × 51 mm	No	197
109E5712M501	109E5712M502	109E5712M501	109E5712M5D01	—	Ø172 × 150 × 51 mm	No	197

Note 1: For compliance with standards, see individual product pages. Please contact your point of sale regarding low-speed sensors.
Note 2: The » mark indicates Short Lead Time Service applicable models. See p. 664 for details.

Models listed in product pages	List of models (The models listed on the right of the models listed in product pages are option models. Option models may not necessarily comply with the same standards as the models listed in product pages. Contact us for details of the "—" models.)				Frame size	Rib	page
	Without sensor	With pulse sensor	With lock sensor	With PWM control and pulse sensor			
109E5712Y501	109E5712Y502	109E5712Y501	—	—	Ø172 × 150 × 51 mm	No	197
109E5724C501	109E5724C502	109E5724C501	109E5724C5D01	9EH5724P5C01	Ø172 × 150 × 51 mm	No	197
109E5724F501	109E5724F502	109E5724F501	—	—	Ø172 × 150 × 51 mm	No	197
109E5724H501	109E5724H502	109E5724H501	109E5724H5D01	—	Ø172 × 150 × 51 mm	No	197
109E5724K501	109E5724K502	109E5724K501	109E5724K5D01	—	Ø172 × 150 × 51 mm	No	197
109E5724M501	109E5724M502	109E5724M501	—	—	Ø172 × 150 × 51 mm	No	197
109E5748C501	109E5748C502	109E5748C501	—	—	Ø172 × 150 × 51 mm	No	197
109E5748F501	109E5748F502	109E5748F501	—	—	Ø172 × 150 × 51 mm	No	197
109E5748H501	109E5748H502	109E5748H501	109E5748H5D01	—	Ø172 × 150 × 51 mm	No	197
109E5748K501	109E5748K502	109E5748K501	—	—	Ø172 × 150 × 51 mm	No	197
109E5748M501	109E5748M502	109E5748M501	—	—	Ø172 × 150 × 51 mm	No	197
109L1712H501	109L1712H502	109L1712H501	109L1712H5D01	—	Ø172 × 51 mm	No	414
109L1712M501	109L1712M502	109L1712M501	109L1712M5D01	—	Ø172 × 51 mm	No	414
109L1724H501	109L1724H502	109L1724H501	109L1724H5D01	—	Ø172 × 51 mm	No	414
109L1724M501	109L1724M502	109L1724M501	109L1724M5D01	—	Ø172 × 51 mm	No	414
109L1748H501	109L1748H502	109L1748H501	109L1748H5D01	—	Ø172 × 51 mm	No	414
109L1748M501	109L1748M502	109L1748M501	109L1748M5D01	—	Ø172 × 51 mm	No	414
109L5712H501	109L5712H502	109L5712H501	109L5712H5D01	—	Ø172 × 150 × 51 mm	No	412
109L5712M501	109L5712M502	109L5712M501	109L5712M5D01	—	Ø172 × 150 × 51 mm	No	412
109L5724H501	109L5724H502	109L5724H501	109L5724H5D01	—	Ø172 × 150 × 51 mm	No	412
109L5724M501	109L5724M502	109L5724M501	109L5724M5D01	—	Ø172 × 150 × 51 mm	No	412
109L5748H501	109L5748H502	109L5748H501	109L5748H5D01	—	Ø172 × 150 × 51 mm	No	412
109L5748M501	109L5748M502	109L5748M501	109L5748M5D01	—	Ø172 × 150 × 51 mm	No	412
109P0405F3013	109P0405F3023	109P0405F3013	109P0405F3D013	—	40 × 40 × 28 mm	Yes	50
109P0405F601	109P0405F602	109P0405F601	109P0405F6D01	—	40 × 40 × 20 mm	Yes	34
109P0405H3013	109P0405H3023	109P0405H3013	109P0405H3D013	—	40 × 40 × 28 mm	Yes	50
109P0405H901	109P0405H902	109P0405H901	109P0405H9D01	—	40 × 40 × 10 mm	Yes	23
109P0405M601	109P0405M602	109P0405M601	109P0405M6D01	—	40 × 40 × 20 mm	Yes	34
109P0405M901	109P0405M902	109P0405M901	109P0405M9D01	—	40 × 40 × 10 mm	Yes	23
109P0412B3013	109P0412B3023	109P0412B3013	109P0412B3D013	—	40 × 40 × 28 mm	Yes	50
109P0412F3013	109P0412F3023	109P0412F3013	109P0412F3D013	—	40 × 40 × 28 mm	Yes	50
109P0412F601	109P0412F602	109P0412F601	109P0412F6D01	—	40 × 40 × 20 mm	Yes	34
109P0412G3013	109P0412G3023	109P0412G3013	109P0412G3D013	—	40 × 40 × 28 mm	Yes	50
109P0412H3013	109P0412H3023	109P0412H3013	109P0412H3D013	—	40 × 40 × 28 mm	Yes	50
109P0412H901	109P0412H902	109P0412H901	109P0412H9D01	109P0412P9H01	40 × 40 × 10 mm	Yes	23
109P0412M3013	109P0412M3023	109P0412M3013	109P0412M3D013	—	40 × 40 × 28 mm	Yes	50
109P0412M601	109P0412M602	109P0412M601	109P0412M6D01	—	40 × 40 × 20 mm	Yes	34
109P0412M901	109P0412M902	109P0412M901	109P0412M9D01	—	40 × 40 × 10 mm	Yes	23
109P0424B3013	109P0424B3023	109P0424B3013	109P0424B3D013	—	40 × 40 × 28 mm	Yes	50
109P0424B601	109P0424B602	109P0424B601	109P0424B6D01	—	40 × 40 × 20 mm	Yes	34
109P0424F3013	109P0424F3023	109P0424F3013	109P0424F3D013	—	40 × 40 × 28 mm	Yes	50
109P0424F601	109P0424F602	109P0424F601	109P0424F6D01	—	40 × 40 × 20 mm	Yes	34
109P0424G3013	109P0424G3023	109P0424G3013	109P0424G3D013	—	40 × 40 × 28 mm	Yes	50
109P0424H3013	109P0424H3023	109P0424H3013	109P0424H3D013	—	40 × 40 × 28 mm	Yes	50
109P0424H901	109P0424H902	109P0424H901	109P0424H9D01	—	40 × 40 × 10 mm	Yes	23
109P0424H701	109P0424H702	109P0424H701	109P0424H7D01	—	40 × 40 × 15 mm	Yes	28
9B1TP24P0H001	—	—	—	9B1TP24P0H001	270 × 270 × 99 mm	—	459
9B1TP48P0G001	—	—	—	9B1TP48P0G001	270 × 270 × 99 mm	—	459
9B1TP48P0H001	—	—	—	9B1TP48P0H001	270 × 270 × 99 mm	—	459
9B1TS48P0G001	—	—	—	9B1TS48P0G001	270 × 270 × 119 mm	—	462
9B1TS48P0H001	—	—	—	9B1TS48P0H001	270 × 270 × 119 mm	—	462
9B1W2TP24P0H001	—	—	—	9B1W2TP24P0H001	270 × 270 × 99 mm	—	335
9B1W2TP48P0S001	—	—	—	9B1W2TP48P0S001	270 × 270 × 99 mm	—	335
9B1W2TS48P0S001	—	—	—	9B1W2TS48P0S001	270 × 270 × 119 mm	—	338
9BD12FC6-1	9BD12FA6-1	9BD12FC6-1	9BD12FD6-1	—	76 × 20 mm	—	468
9BD12HC6-1	9BD12HA6-1	9BD12HC6-1	9BD12HD6-1	—	76 × 20 mm	—	468
9BD12SC6-1	9BD12SA6-1	9BD12SC6-1	9BD12SD6-1	9BD12P6S01	76 × 20 mm	—	468

Note 1: For compliance with standards, see individual product pages. Please contact your point of sale regarding low-speed sensors.
Note 2: The » mark indicates Short Lead Time Service applicable models. See p. 664 for details.

Models listed in product pages	List of models (The models listed on the right of the models listed in product pages are option models. Option models may not necessarily comply with the same standards as the models listed in product pages. Contact us for details of the "—" models.)				Frame size	Rib	page
	Without sensor	With pulse sensor	With lock sensor	With PWM control and pulse sensor			
9BD24FC6-1	9BD24FA6-1	» 9BD24FC6-1	» 9BD24FD6-1	—	76 × 20 mm	—	468
9BD24HC6-1	9BD24HA6-1	» 9BD24HC6-1	» 9BD24HD6-1	—	76 × 20 mm	—	468
9BD24SC6-40	9BD24SA6-40	9BD24SC6-40	9BD24SD6-40	9BD24P6S06	76 × 20 mm	—	468
9BFB12P2H003	—	—	—	» 9BFB12P2H003	120 × 32 mm	—	482
9BFB24P2H003	9BFB24H2002	—	9BFB24H2D001	» 9BFB24P2H003	120 × 32 mm	—	482
9BMB12F201	9BMB12F202	» 9BMB12F201	9BMB12F2D01	» 9BMB12P2F01	97 × 33 mm	—	474
9BMB12G201	9BMB12G202	» 9BMB12G201	9BMB12G2D01	» 9BMB12P2G01	97 × 33 mm	—	474
9BMB12H201	9BMB12H202	» 9BMB12H201	» 9BMB12H2D01	» 9BMB12P2H01	97 × 33 mm	—	474
9BMB12K201	9BMB12K202	» 9BMB12K201	—	» 9BMB12P2K01	97 × 33 mm	—	474
9BMB12P2F01	9BMB12F202	» 9BMB12F201	9BMB12F2D01	» 9BMB12P2F01	97 × 33 mm	—	474
9BMB12P2G01	9BMB12G202	» 9BMB12G201	9BMB12G2D01	» 9BMB12P2G01	97 × 33 mm	—	474
9BMB12P2H01	9BMB12H202	» 9BMB12H201	» 9BMB12H2D01	» 9BMB12P2H01	97 × 33 mm	—	474
9BMB12P2K01	9BMB12K202	» 9BMB12K201	—	» 9BMB12P2K01	97 × 33 mm	—	474
9BMB12P2S01	9BMB12S202	» 9BMB12S201	—	9BMB12P2S01	97 × 33 mm	—	474
9BMB12S201	9BMB12S202	» 9BMB12S201	—	9BMB12P2S01	97 × 33 mm	—	474
9BMB24F201	9BMB24F202	» 9BMB24F201	9BMB24F2D01	» 9BMB24P2F01	97 × 33 mm	—	474
9BMB24G201	» 9BMB24G202	» 9BMB24G201	» 9BMB24G2D01	» 9BMB24P2G01	97 × 33 mm	—	474
9BMB24H201	9BMB24H202	» 9BMB24H201	» 9BMB24H2D01	» 9BMB24P2H01	97 × 33 mm	—	474
9BMB24K201	9BMB24K202	9BMB24K201	9BMB24K2D01	» 9BMB24P2K01	97 × 33 mm	—	474
9BMB24P2F01	9BMB24F202	» 9BMB24F201	9BMB24F2D01	» 9BMB24P2F01	97 × 33 mm	—	474
9BMB24P2G01	» 9BMB24G202	» 9BMB24G201	» 9BMB24G2D01	» 9BMB24P2G01	97 × 33 mm	—	474
9BMB24P2H01	9BMB24H202	» 9BMB24H201	» 9BMB24H2D01	» 9BMB24P2H01	97 × 33 mm	—	474
9BMB24P2K01	9BMB24K202	9BMB24K201	9BMB24K2D01	» 9BMB24P2K01	97 × 33 mm	—	474
9BMB24P2S01	9BMB24S202	» 9BMB24S201	—	9BMB24P2S01	97 × 33 mm	—	474
9BMB24S201	9BMB24S202	» 9BMB24S201	—	9BMB24P2S01	97 × 33 mm	—	474
9BMC12P2G001	9BMC12G2002	—	—	» 9BMC12P2G001	97 × 33 mm	—	472
9BMC24P2G001	—	—	—	» 9BMC24P2G001	97 × 33 mm	—	472
9CR0612P5G03	9CR0612G502	9CR0612G501	—	9CR0612P5G03	60 × 60 × 51 mm	—	222
9CR0612P5H03	—	9CR0612H501	—	9CR0612P5H03	60 × 60 × 51 mm	—	222
9CR1212P0G03	9CR1212G002	9CR1212G001	—	9CR1212P0G03	120 × 120 × 76 mm	—	240
9CR5748P9G001	—	—	—	» 9CR5748P9G001	ø172 × 150 × 102 mm	—	242
9CRA0312P4J03	9CRA0312K402	9CRA0312J401	—	9CRA0312P4J03	38 × 38 × 48 mm	—	208
9CRA0312P4K03	9CRA0312K402	—	—	9CRA0312P4K03	38 × 38 × 48 mm	—	208
9CRA0412P4G03	9CRA0412G402	—	—	9CRA0412P4G03	40 × 40 × 48 mm	—	210
9CRA0412P4J03	9CRA0412J402	9CRA0412J401	—	9CRA0412P4J03	40 × 40 × 48 mm	—	210
9CRA0412P4K03	9CRA0412K402	9CRA0412K401	—	9CRA0412P4K03	40 × 40 × 48 mm	—	210
9CRA0612P0G001	—	—	—	» 9CRA0612P0G001	60 × 60 × 76 mm	—	229
9CRA0612P0S001	—	—	—	» 9CRA0612P0S001	60 × 60 × 76 mm	—	229
9CRA0612P6G001	—	—	—	» 9CRA0612P6G001	60 × 60 × 56 mm	—	224
9CRA0612P6J001	—	—	—	» 9CRA0612P6J001	60 × 60 × 56 mm	—	224
9CRA0612P6K001	—	—	—	» 9CRA0612P6K001	60 × 60 × 56 mm	—	224
9CRA0812P8G001	—	9CRA0812G8001	—	» 9CRA0812P8G001	80 × 80 × 80 mm	—	235
9CRA0812P8H001	—	9CRA0812H8001	—	9CRA0812P8H001	80 × 80 × 80 mm	—	235
9CRA0824P8G001	—	—	9CRA0824G8D001	9CRA0824P8G001	80 × 80 × 80 mm	—	235
9CRA0848P8G001	—	—	—	» 9CRA0848P8G001	80 × 80 × 80 mm	—	235
9CRA0912P0G001	—	—	—	» 9CRA0912P0G001	92 × 92 × 76 mm	—	238
9CRA0948P0G601	—	—	—	» 9CRA0948P0G601	92 × 92 × 76 mm	—	238
9CRB0812P8G001	—	—	—	» 9CRB0812P8G001	80 × 80 × 80 mm	—	231
9CRE0412P5J03	9CRE0412J502	—	—	9CRE0412P5J03	40 × 40 × 56 mm	—	220
9CRE0612P0G001	—	—	—	9CRE0612P0G001	60 × 60 × 76 mm	—	227
9CRE0812P8G001	—	—	—	9CRE0812P8G001	80 × 80 × 80 mm	—	233
9CRH0412P5J001	—	—	—	» 9CRH0412P5J001	40 × 40 × 56 mm	—	215
9CRJ0412P5J001				» 9CRJ0412P5J001	40 × 40 × 56 mm	—	213
9CRL0812P8G001	—	—	—	» 9CRL0812P8G001	80 × 80 × 80 mm	—	387
9CRLA0612P0G001	—	—	—	» 9CRLA0612P0G001	60 × 60 × 76 mm	—	380
9CRLB0612P0G001	—	—	—	9CRLB0612P0G001	60 × 60 × 76 mm	—	378
9CRV0412P5G201	—	—	—	9CRV0412P5G201	40 × 40 × 56 mm	—	217

Note 1: For compliance with standards, see individual product pages. Please contact your point of sale regarding low-speed sensors.
Note 2: The » mark indicates Short Lead Time Service applicable models. See p. 664 for details.

Models listed in product pages	List of models (The models listed on the right of the models listed in product pages are option models. Option models may not necessarily comply with the same standards as the models listed in product pages. Contact us for details of the "—" models.)				Frame size	Rib	page
	Without sensor	With pulse sensor	With lock sensor	With PWM control and pulse sensor			
9CRV0412P5H201	—	—	—	9CRV0412P5H201	40 × 40 × 56 mm	—	217
9CRV0412P5J201	—	—	—	9CRV0412P5J201	40 × 40 × 56 mm	—	217
9CRV0412P5S201	—	—	—	9CRV0412P5S201	40 × 40 × 56 mm	—	217
9EC2024H001	9EC2024H002	9EC2024H001	—	—	Ø200 × 70 mm	No	205
9EC2048A001	9EC2048A002	9EC2048A001	9EC2048A0D01	9EC2048P0A01	Ø200 × 70 mm	No	205
9EC2048H001	9EC2048H002	9EC2048H001	—	—	Ø200 × 70 mm	No	205
9G0612P4H001	9G0612H4002	—	9G0612H4D001	9G0612P4H001	60 × 60 × 25 mm	Yes	67
9G0612P4H0011	9G0612H40021	9G0612H40011	9G0612H4D0011	9G0612P4H0011	60 × 60 × 25 mm	No	67
9G0612P4S001	9G0612S4002	9G0612S4001	—	9G0612P4S001	60 × 60 × 25 mm	Yes	67
9G0612P4S0011	9G0612S40021	—	—	9G0612P4S0011	60 × 60 × 25 mm	No	67
9G0624P4H001	9G0624H4002	9G0624H4001	9G0624H4D001	9G0624P4H001	60 × 60 × 25 mm	Yes	67
9G0624P4H0011	9G0624H40021	—	—	9G0624P4H0011	60 × 60 × 25 mm	No	67
9G0624P4S001	9G0624S4002	—	9G0624S4D001	9G0624P4S001	60 × 60 × 25 mm	Yes	67
9G0624P4S0011	9G0624S40021	—	—	9G0624P4S0011	60 × 60 × 25 mm	No	67
9G0648P4S001	9G0648S4002	9G0648S4001	—	9G0648P4S001	60 × 60 × 25 mm	Yes	67
9G0648P4S0011	—	—	—	9G0648P4S0011	60 × 60 × 25 mm	No	67
9G0912A201	9G0912A202	9G0912A201	9G0912A2D01	9G0912P2A01	92 × 92 × 32 mm	Yes	137
9G0912A2011	9G0912A2021	9G0912A2011	9G0912A2D011	9G0912P2A011	92 × 92 × 32 mm	No	137
9G0912H201	9G0912H202	9G0912H201	9G0912H2D01	9G0912P2H01	92 × 92 × 32 mm	Yes	137
9G0912H2011	9G0912H2021	9G0912H2011	9G0912H2D011	—	92 × 92 × 32 mm	No	137
9G0912M201	9G0912M202	9G0912M201	9G0912M2D01	—	92 × 92 × 32 mm	Yes	137
9G0912M2011	9G0912M2021	9G0912M2011	9G0912M2D011	—	92 × 92 × 32 mm	No	137
9G0912S201	9G0912S202	9G0912S201	9G0912S2D01	9G0912P2S01	92 × 92 × 32 mm	Yes	137
9G0912S2011	9G0912S2021	9G0912S2011	9G0912S2D011	—	92 × 92 × 32 mm	No	137
9G0924A201	9G0924A202	9G0924A201	9G0924A2D01	—	92 × 92 × 32 mm	Yes	137
9G0924A2011	9G0924A2021	9G0924A2011	9G0924A2D011	—	92 × 92 × 32 mm	No	137
9G0924H201	9G0924H202	9G0924H201	9G0924H2D01	—	92 × 92 × 32 mm	Yes	137
9G0924H2011	9G0924H2021	9G0924H2011	9G0924H2D011	—	92 × 92 × 32 mm	No	137
9G0924M201	9G0924M202	9G0924M201	9G0924M2D01	—	92 × 92 × 32 mm	Yes	137
9G0924M2011	9G0924M2021	9G0924M2011	9G0924M2D011	—	92 × 92 × 32 mm	No	137
9G0924S201	9G0924S202	9G0924S201	9G0924S2D01	—	92 × 92 × 32 mm	Yes	137
9G0924S2011	9G0924S2021	9G0924S2011	9G0924S2D011	—	92 × 92 × 32 mm	No	137
9G0948A201	9G0948A202	9G0948A201	9G0948A2D01	—	92 × 92 × 32 mm	Yes	137
9G0948A2011	9G0948A2021	9G0948A2011	9G0948A2D011	—	92 × 92 × 32 mm	No	137
9G0948H201	9G0948H202	9G0948H201	9G0948H2D01	—	92 × 92 × 32 mm	Yes	137
9G0948H2011	9G0948H2021	9G0948H2011	9G0948H2D011	—	92 × 92 × 32 mm	No	137
9G0948M201	9G0948M202	9G0948M201	9G0948M2D01	—	92 × 92 × 32 mm	Yes	137
9G0948M2011	9G0948M2021	9G0948M2011	9G0948M2D011	—	92 × 92 × 32 mm	No	137
9G0948S201	9G0948S202	9G0948S201	9G0948S2D01	—	92 × 92 × 32 mm	Yes	137
9G0948S2011	9G0948S2021	9G0948S2011	9G0948S2D011	—	92 × 92 × 32 mm	No	137
9GA0312E3001	9GA0312E3002	9GA0312E3001	9GA0312E3D001	—	38 × 38 × 28 mm	Yes	20
9GA0312E30011	9GA0312E30021	9GA0312E30011	9GA0312E3D0011	—	38 × 38 × 28 mm	No	20
9GA0312H3001	9GA0312H3002	9GA0312H3001	9GA0312H3D001	—	38 × 38 × 28 mm	Yes	20
9GA0312H30011	—	9GA0312H30011	—	—	38 × 38 × 28 mm	No	20
9GA0312P3G001	—	9GA0312G3001	9GA0312G3D001	9GA0312P3G001	38 × 38 × 28 mm	Yes	20
9GA0312P3G0011	—	—	—	9GA0312P3G0011	38 × 38 × 28 mm	No	20
9GA0312P3J001	9GA0312J3002	9GA0312J3001	9GA0312J3D001	9GA0312P3J001	38 × 38 × 28 mm	Yes	20
9GA0312P3J0011	—	—	—	9GA0312P3J0011	38 × 38 × 28 mm	No	20
9GA0312P3K001	—	9GA0312K3001	9GA0312K3D001	9GA0312P3K001	38 × 38 × 28 mm	Yes	20
9GA0312P3K0011	—	—	9GA0312K3D0011	9GA0312P3K0011	38 × 38 × 28 mm	No	20
9GA0405P6F001	9GA0405F6002	9GA0405F6001	—	9GA0405P6F001	40 × 40 × 20 mm	Yes	30
9GA0405P6H001	9GA0405H6002	9GA0405H6001	—	9GA0405P6H001	40 × 40 × 20 mm	Yes	30
9GA0405P7C001	—	—	—	9GA0405P7C001	40 × 40 × 15 mm	Yes	25
9GA0412A301	9GA0412A302	9GA0412A301	9GA0412A3D01	—	40 × 40 × 28 mm	Yes	43
9GA0412A3011	—	9GA0412A3011	—	—	40 × 40 × 28 mm	No	43
9GA0412G7001	9GA0412G7002	9GA0412G7001	9GA0412G7D001	9GA0412P7G001	40 × 40 × 15 mm	Yes	25
9GA0412H7001	9GA0412H7002	9GA0412H7001	9GA0412H7D001	—	40 × 40 × 15 mm	Yes	25

Note 1: For compliance with standards, see individual product pages. Please contact your point of sale regarding low-speed sensors.
Note 2: The mark indicates Short Lead Time Service applicable models. See p. 664 for details.

Models listed in product pages	List of models (The models listed on the right of the models listed in product pages are option models. Option models may not necessarily comply with the same standards as the models listed in product pages. Contact us for details of the "—" models.)				Frame size	Rib	page
	Without sensor	With pulse sensor	With lock sensor	With PWM control and pulse sensor			
9GA0412L7001	—	9GA0412L7001	—	—	40 × 40 × 15 mm	Yes	25
9GA0412P3G01	9GA0412G302	9GA0412G301	—	9GA0412P3G01	40 × 40 × 28 mm	Yes	43
9GA0412P3G011	9GA0412G3021	9GA0412G3011	—	9GA0412P3G011	40 × 40 × 28 mm	No	43
9GA0412P3H01	9GA0412H302	9GA0412H301	9GA0412H3D01	9GA0412P3H01	40 × 40 × 28 mm	Yes	43
9GA0412P3H011	9GA0412H3021	9GA0412H3011	9GA0412H3D011	9GA0412P3H011	40 × 40 × 28 mm	No	43
9GA0412P3J01	9GA0412J302	9GA0412J301	9GA0412J3D01	9GA0412P3J01	40 × 40 × 28 mm	Yes	43
9GA0412P3J011	9GA0412J3021	9GA0412J3011	—	9GA0412P3J011	40 × 40 × 28 mm	No	43
9GA0412P3M01	9GA0412M302	9GA0412M301	9GA0412M3D01	9GA0412P3M01	40 × 40 × 28 mm	Yes	43
9GA0412P3M011	9GA0412M3021	9GA0412M3011	—	9GA0412P3M011	40 × 40 × 28 mm	No	43
9GA0412P6F001	9GA0412F6002	9GA0412F6001	—	9GA0412P6F001	40 × 40 × 20 mm	Yes	30
9GA0412P6G001	9GA0412G6002	9GA0412G6001	—	9GA0412P6G001	40 × 40 × 20 mm	Yes	30
9GA0412P6H001	9GA0412H6002	9GA0412H6001	—	9GA0412P6H001	40 × 40 × 20 mm	Yes	30
9GA0412P7G001	9GA0412G7002	9GA0412G7001	9GA0412G7D001	9GA0412P7G001	40 × 40 × 15 mm	Yes	25
9GA0424P3G001	9GA0424G3002	9GA0424G3001	9GA0424G3D001	9GA0424P3G001	40 × 40 × 28 mm	Yes	43
9GA0424P3G0011	9GA0424G30021	9GA0424G30011	—	9GA0424P3G0011	40 × 40 × 28 mm	No	43
9GA0424P3H001	9GA0424H3002	9GA0424H3001	9GA0424H3D001	9GA0424P3H001	40 × 40 × 28 mm	Yes	43
9GA0424P3H0011	9GA0424H30021	9GA0424H30011	—	9GA0424P3H0011	40 × 40 × 28 mm	No	43
9GA0424P3J001	9GA0424J3002	9GA0424J3001	9GA0424J3D001	9GA0424P3J001	40 × 40 × 28 mm	Yes	43
9GA0424P3J0011	9GA0424J30021	9GA0424J30011	—	9GA0424P3J0011	40 × 40 × 28 mm	No	43
9GA0424P3M001	9GA0424M3002	9GA0424M3001	9GA0424M3D001	9GA0424P3M001	40 × 40 × 28 mm	Yes	43
9GA0424P3M0011	9GA0424M30021	9GA0424M30011	—	9GA0424P3M0011	40 × 40 × 28 mm	No	43
9GA0424P6F001	9GA0424F6002	9GA0424F6001	9GA0424F6D001	9GA0424P6F001	40 × 40 × 20 mm	Yes	30
9GA0424P6G001	9GA0424G6002	9GA0424G6001	9GA0424G6D001	9GA0424P6G001	40 × 40 × 20 mm	Yes	30
9GA0424P6H001	9GA0424H6002	9GA0424H6001	9GA0424H6D001	9GA0424P6H001	40 × 40 × 20 mm	Yes	30
9GA0512P7A001	9GA0512A7002	9GA0512A7001	—	9GA0512P7A001	52 × 52 × 15 mm	Yes	53
9GA0512P7G001	9GA0512G7002	9GA0512G7001	—	9GA0512P7G001	52 × 52 × 15 mm	Yes	53
9GA0512P7H001	9GA0512H7002	9GA0512H7001	9GA0512H7D001	9GA0512P7H001	52 × 52 × 15 mm	Yes	53
9GA0512P7M001	9GA0512M7002	9GA0512M7001	—	9GA0512P7M001	52 × 52 × 15 mm	Yes	53
9GA0524P7A001	9GA0524A7002	9GA0524A7001	9GA0524A7D001	9GA0524P7A001	52 × 52 × 15 mm	Yes	53
9GA0524P7G001	9GA0524G7002	9GA0524G7001	9GA0524G7D001	9GA0524P7G001	52 × 52 × 15 mm	Yes	53
9GA0524P7H001	9GA0524H7002	9GA0524H7001	—	9GA0524P7H001	52 × 52 × 15 mm	Yes	53
9GA0524P7M001	9GA0524M7002	9GA0524M7001	—	9GA0524P7M001	52 × 52 × 15 mm	Yes	53
9GA0612B701	—	9GA0612B701	—	—	60 × 60 × 15 mm	Yes	59
9GA0612G701	9GA0612G702	9GA0612G701	9GA0612G7D01	9GA0612P7G01	60 × 60 × 15 mm	Yes	59
9GA0612G9001	9GA0612G9002	9GA0612G9001	9GA0612G9D001	9GA0612P9G001	60 × 60 × 10 mm	Yes	57
9GA0612H6001	9GA0612H6002	9GA0612H6001	9GA0612H6D001	—	60 × 60 × 20 mm	Yes	63
9GA0612H701	9GA0612H702	9GA0612H701	9GA0612H7D01	9GA0612P7H01	60 × 60 × 15 mm	Yes	59
9GA0612H9001	9GA0612H9002	9GA0612H9001	9GA0612H9D001	—	60 × 60 × 10 mm	Yes	57
9GA0612L701	9GA0612L702	9GA0612L701	9GA0612L7D01	—	60 × 60 × 15 mm	Yes	59
9GA0612L9001	9GA0612L9002	9GA0612L9001	9GA0612L9D001	—	60 × 60 × 10 mm	Yes	57
9GA0612M6001	9GA0612M6002	9GA0612M6001	9GA0612M6D001	—	60 × 60 × 20 mm	Yes	63
9GA0612M701	9GA0612M702	9GA0612M701	9GA0612M7D01	—	60 × 60 × 15 mm	Yes	59
9GA0612P1H03	9GA0612H102	9GA0612H101	—	9GA0612P1H03	60 × 60 × 38 mm	Yes	80
9GA0612P1H031	9GA0612H1021	9GA0612H1011	—	9GA0612P1H031	60 × 60 × 38 mm	No	80
9GA0612P1J03	9GA0612J102	9GA0612J101	9GA0612J1D01	9GA0612P1J03	60 × 60 × 38 mm	Yes	80
9GA0612P1J031	9GA0612J1021	9GA0612J1011	—	9GA0612P1J031	60 × 60 × 38 mm	No	80
9GA0612P1K03	9GA0612K102	9GA0612K101	9GA0612K1D01	9GA0612P1K03	60 × 60 × 38 mm	Yes	80
9GA0612P1K031	9GA0612K1021	9GA0612K1011	9GA0612K1D011	9GA0612P1K031	60 × 60 × 38 mm	No	80
9GA0612P1K60	9GA0612K162	9GA0612K161	—	9GA0612P1K60	60 × 60 × 38 mm	Yes	80
9GA0612P1K601	9GA0612K1621	9GA0612K1611	—	9GA0612P1K601	60 × 60 × 38 mm	No	80
9GA0612P6G001	9GA0612G6002	9GA0612G6001	—	9GA0612P6G001	60 × 60 × 20 mm	Yes	63
9GA0612P6S001	9GA0612S6002	9GA0612S6001	—	9GA0612P6S001	60 × 60 × 20 mm	Yes	63
9GA0612P7G01	9GA0612G702	9GA0612G701	9GA0612G7D01	9GA0612P7G01	60 × 60 × 15 mm	Yes	59
9GA0612P7H01	9GA0612H702	9GA0612H701	9GA0612H7D01	9GA0612P7H01	60 × 60 × 15 mm	Yes	59
9GA0624H6001	9GA0624H6002	9GA0624H6001	9GA0624H6D001	—	60 × 60 × 20 mm	Yes	63
9GA0624L701	9GA0624L702	9GA0624L701	9GA0624L7D01	—	60 × 60 × 15 mm	Yes	59
9GA0624M6001	9GA0624M6002	9GA0624M6001	9GA0624M6D001	—	60 × 60 × 20 mm	Yes	63

Note 1: For compliance with standards, see individual product pages. Please contact your point of sale regarding low-speed sensors.
Note 2: The mark indicates Short Lead Time Service applicable models. See p. 664 for details.

Models listed in product pages	List of models (The models listed on the right of the models listed in product pages are option models. Option models may not necessarily comply with the same standards as the models listed in product pages. Contact us for details of the "—" models.)				Frame size	Rib	page
	Without sensor	With pulse sensor	With lock sensor	With PWM control and pulse sensor			
9GA0624M701	9GA0624M702	9GA0624M701	—	—	60 × 60 × 15 mm	Yes	59
9GA0624P1J03	9GA0624J102	9GA0624J101	—	9GA0624P1J03	60 × 60 × 38 mm	Yes	80
9GA0624P1J031	9GA0624J1021	9GA0624J1011	—	9GA0624P1J031	60 × 60 × 38 mm	No	80
9GA0624P1K03	9GA0624K102	—	9GA0624K1D01	9GA0624P1K03	60 × 60 × 38 mm	Yes	80
9GA0624P1K031	—	—	—	9GA0624P1K031	60 × 60 × 38 mm	No	80
9GA0624P6G001	9GA0624G6002	9GA0624G6001	9GA0624G6D001	9GA0624P6G001	60 × 60 × 20 mm	Yes	63
9GA0624P6S001	9GA0624S6002	9GA0624S6001	—	9GA0624P6S001	60 × 60 × 20 mm	Yes	63
9GA0624P7G01	9GA0624G702	—	9GA0624G7D01	9GA0624P7G01	60 × 60 × 15 mm	Yes	59
9GA0648P1K03	—	9GA0648K101	—	9GA0648P1K03	60 × 60 × 38 mm	Yes	80
9GA0648P1K031	—	—	—	9GA0648P1K031	60 × 60 × 38 mm	No	80
9GA0712P1G001	—	—	—	9GA0712P1G001	70 × 70 × 38 mm	Yes	86
9GA0712P1G0011	—	—	—	9GA0712P1G0011	70 × 70 × 38 mm	No	86
9GA0712P1H001	—	—	9GA0712H1D001	9GA0712P1H001	70 × 70 × 38 mm	Yes	86
9GA0712P1H0011	—	—	—	9GA0712P1H0011	70 × 70 × 38 mm	No	86
9GA0812A2001	9GA0812A2002	9GA0812A2001	9GA0812A2D001	—	80 × 80 × 32 mm	Yes	104
9GA0812A20011	9GA0812A20021	9GA0812A20011	9GA0812A2D0011	—	80 × 80 × 32 mm	No	104
9GA0812B2001	9GA0812B2002	9GA0812B2001	9GA0812B2D001	—	80 × 80 × 32 mm	Yes	104
9GA0812B20011	9GA0812B20021	9GA0812B20011	9GA0812B2D0011	—	80 × 80 × 32 mm	No	104
9GA0812H7001	9GA0812H7002	9GA0812H7001	9GA0812H7D001	—	80 × 80 × 15 mm	Yes	88
9GA0812L2001	9GA0812L2002	9GA0812L2001	9GA0812L2D001	—	80 × 80 × 32 mm	Yes	104
9GA0812L20011	9GA0812L20021	9GA0812L20011	9GA0812L2D0011	—	80 × 80 × 32 mm	No	104
9GA0812M7001	9GA0812M7002	9GA0812M7001	9GA0812M7D001	—	80 × 80 × 15 mm	Yes	88
9GA0812P1G61	—	—	—	9GA0812P1G61	80 × 80 × 38 mm	Yes	115
9GA0812P1G611	—	—	—	9GA0812P1G611	80 × 80 × 38 mm	No	115
9GA0812P1H61	9GA0812H162	9GA0812H161	9GA0812H1D61	9GA0812P1H61	80 × 80 × 38 mm	Yes	115
9GA0812P1H611	9GA0812H1621	9GA0812H1611	—	9GA0812P1H611	80 × 80 × 38 mm	No	115
9GA0812P1S61	9GA0812S162	9GA0812S161	9GA0812S1D61	9GA0812P1S61	80 × 80 × 38 mm	Yes	115
9GA0812P1S611	9GA0812S1621	9GA0812S1611	—	9GA0812P1S611	80 × 80 × 38 mm	No	115
9GA0812P2H001	—	—	—	9GA0812P2H001	80 × 80 × 32 mm	Yes	104
9GA0812P2H0011	—	—	—	9GA0812P2H0011	80 × 80 × 32 mm	No	104
9GA0812P2M001	—	—	—	9GA0812P2M001	80 × 80 × 32 mm	Yes	104
9GA0812P2M0011	—	—	—	9GA0812P2M0011	80 × 80 × 32 mm	No	104
9GA0812P2S001	—	9GA0812S2001	—	9GA0812P2S001	80 × 80 × 32 mm	Yes	104
9GA0812P2S0011	—	—	—	9GA0812P2S0011	80 × 80 × 32 mm	No	104
9GA0812P4G001	9GA0812G4002	9GA0812G4001	9GA0812G4D001	9GA0812P4G001	80 × 80 × 25 mm	Yes	95
9GA0812P4G0011	9GA0812G40021	9GA0812G40011	—	9GA0812P4G0011	80 × 80 × 25 mm	No	95
9GA0812P4J001	9GA0812J4002	9GA0812J4001	9GA0812J4D001	9GA0812P4J001	80 × 80 × 25 mm	Yes	95
9GA0812P4J0011	9GA0812J40021	9GA0812J40011	—	9GA0812P4J0011	80 × 80 × 25 mm	No	95
9GA0812P6G001	9GA0812G6002	9GA0812G6001	—	9GA0812P6G001	80 × 80 × 20 mm	Yes	92
9GA0812P6M001	9GA0812M6002	9GA0812M6001	—	9GA0812P6M001	80 × 80 × 20 mm	Yes	92
9GA0812P7G001	9GA0812G7002	9GA0812G7001	9GA0812G7D001	9GA0812P7G001	80 × 80 × 15 mm	Yes	88
9GA0812P7S001	—	—	—	9GA0812P7S001	80 × 80 × 15 mm	Yes	88
9GA0824A2001	9GA0824A2002	9GA0824A2001	9GA0824A2D001	—	80 × 80 × 32 mm	Yes	104
9GA0824A20011	9GA0824A20021	9GA0824A20011	9GA0824A2D0011	—	80 × 80 × 32 mm	No	104
9GA0824B2001	9GA0824B2002	9GA0824B2001	9GA0824B2D001	—	80 × 80 × 32 mm	Yes	104
9GA0824B20011	9GA0824B20021	9GA0824B20011	9GA0824B2D0011	—	80 × 80 × 32 mm	No	104
9GA0824H7001	9GA0824H7002	9GA0824H7001	9GA0824H7D001	—	80 × 80 × 15 mm	Yes	88
9GA0824L2001	9GA0824L2002	9GA0824L2001	9GA0824L2D001	—	80 × 80 × 32 mm	Yes	104
9GA0824L20011	9GA0824L20021	9GA0824L20011	9GA0824L2D0011	—	80 × 80 × 32 mm	No	104
9GA0824M7001	9GA0824M7002	9GA0824M7001	—	—	80 × 80 × 15 mm	Yes	88
9GA0824P1H61	9GA0824H162	9GA0824H161	9GA0824H1D61	9GA0824P1H61	80 × 80 × 38 mm	Yes	115
9GA0824P1H611	9GA0824H1621	9GA0824H1611	—	9GA0824P1H611	80 × 80 × 38 mm	No	115
9GA0824P1S61	9GA0824S162	9GA0824S161	—	9GA0824P1S61	80 × 80 × 38 mm	Yes	115
9GA0824P1S611	9GA0824S1621	9GA0824S1611	—	9GA0824P1S611	80 × 80 × 38 mm	No	115
9GA0824P2S001	9GA0824S2002	—	9GA0824S2D001	9GA0824P2S001	80 × 80 × 32 mm	Yes	104
9GA0824P2S0011	—	—	—	9GA0824P2S0011	80 × 80 × 32 mm	No	104
9GA0824P4G001	9GA0824G4002	9GA0824G4001	9GA0824G4D001	9GA0824P4G001	80 × 80 × 25 mm	Yes	95

Note 1: For compliance with standards, see individual product pages. Please contact your point of sale regarding low-speed sensors.
Note 2: The mark indicates Short Lead Time Service applicable models. See p. 664 for details.

Models listed in product pages	List of models (The models listed on the right of the models listed in product pages are option models. Option models may not necessarily comply with the same standards as the models listed in product pages. Contact us for details of the "—" models.)				Frame size	Rib	page
	Without sensor	With pulse sensor	With lock sensor	With PWM control and pulse sensor			
9GA0824P4G0011	9GA0824G40021	9GA0824G40011	—	9GA0824P4G0011	80 × 80 × 25 mm	No	95
9GA0824P4J001	9GA0824J4002	9GA0824J4001	9GA0824J4D001	9GA0824P4J001	80 × 80 × 25 mm	Yes	95
9GA0824P4J0011	9GA0824J40021	9GA0824J40011	9GA0824J4D0011	9GA0824P4J0011	80 × 80 × 25 mm	No	95
9GA0824P6G001	9GA0824G6002	9GA0824G6001	—	9GA0824P6G001	80 × 80 × 20 mm	Yes	92
9GA0824P6M001	9GA0824M6002	9GA0824M6001	—	9GA0824P6M001	80 × 80 × 20 mm	Yes	92
9GA0824P7G001	9GA0824G7002	—	9GA0824G7D001	9GA0824P7G001	80 × 80 × 15 mm	Yes	88
9GA0824P7S001	9GA0824S7002	—	9GA0824S7D001	9GA0824P7S001	80 × 80 × 15 mm	Yes	88
9GA0848P1S61	—	—	—	9GA0848P1S61	80 × 80 × 38 mm	Yes	115
9GA0848P1S611	—	—	—	9GA0848P1S611	80 × 80 × 38 mm	No	115
9GA0848P2S001	—	—	—	9GA0848P2S001	80 × 80 × 32 mm	Yes	104
9GA0848P2S0011	—	—	—	9GA0848P2S0011	80 × 80 × 32 mm	No	104
9GA0912P1H03	9GA0912H102	9GA0912H101	9GA0912H1D01	9GA0912P1H03	92 × 92 × 38 mm	Yes	143
9GA0912P1H031	9GA0912H1021	9GA0912H1011	—	9GA0912P1H031	92 × 92 × 38 mm	No	143
9GA0912P4G03	9GA0912G402	9GA0912G401	9GA0912G4D01	9GA0912P4G03	92 × 92 × 25 mm	Yes	128
9GA0912P4G031	9GA0912G4021	9GA0912G4011	—	9GA0912P4G031	92 × 92 × 25 mm	No	128
9GA0912P4J03	9GA0912J402	9GA0912J401	9GA0912J4D01	9GA0912P4J03	92 × 92 × 25 mm	Yes	128
9GA0912P4J031	9GA0912J4021	9GA0912J4011	9GA0912J4D011	9GA0912P4J031	92 × 92 × 25 mm	No	128
9GA0924P1H01	9GA0924H102	9GA0924H101	9GA0924H1D01	9GA0924P1H01	92 × 92 × 38 mm	Yes	143
9GA0924P1H011	—	9GA0924H1011	9GA0924H1D011	9GA0924P1H011	92 × 92 × 38 mm	No	143
9GA0924P4G03	9GA0924G402	9GA0924G401	9GA0924G4D01	9GA0924P4G03	92 × 92 × 25 mm	Yes	128
9GA0924P4G031	9GA0924G4021	9GA0924G4011	—	9GA0924P4G031	92 × 92 × 25 mm	No	128
9GA0924P4J03	9GA0924J402	9GA0924J401	9GA0924J4D01	9GA0924P4J03	92 × 92 × 25 mm	Yes	128
9GA0924P4J031	9GA0924J4021	9GA0924J4011	—	9GA0924P4J031	92 × 92 × 25 mm	No	128
9GA0948P1H03	9GA0948H102	9GA0948H101	—	9GA0948P1H03	92 × 92 × 38 mm	Yes	143
9GA0948P1H031	—	—	—	9GA0948P1H031	92 × 92 × 38 mm	No	143
9GA1212G4001	—	9GA1212G4001	—	9GA1212P4G001	120 × 120 × 25 mm	Yes	154
9GA1212G40011	—	9GA1212G40011	—	9GA1212P4G0011	120 × 120 × 25 mm	No	154
9GA1212P4G001	—	9GA1212G4001	—	9GA1212P4G001	120 × 120 × 25 mm	Yes	154
9GA1212P4G0011	—	9GA1212G40011	—	9GA1212P4G0011	120 × 120 × 25 mm	No	154
9GA1212P4S001	9GA1212S4002	9GA1212S4001	—	9GA1212P4S001	120 × 120 × 25 mm	Yes	154
9GA1212P4S0011	—	9GA1212S40011	—	9GA1212P4S0011	120 × 120 × 25 mm	No	154
9GA1212S4001	—	9GA1212S4001	—	9GA1212P4S001	120 × 120 × 25 mm	Yes	154
9GA1212S40011	—	9GA1212S40011	—	9GA1212P4S0011	120 × 120 × 25 mm	No	154
9GA1224G4001	9GA1224G4002	9GA1224G4001	9GA1224G4D001	9GA1224P4G001	120 × 120 × 25 mm	Yes	154
9GA1224G40011	—	9GA1224G40011	—	9GA1224P4G0011	120 × 120 × 25 mm	No	154
9GA1224P4G001	9GA1224G4002	9GA1224G4001	9GA1224G4D001	9GA1224P4G001	120 × 120 × 25 mm	Yes	154
9GA1224P4G0011	—	9GA1224G40011	—	9GA1224P4G0011	120 × 120 × 25 mm	No	154
9GA1224P4S001	—	9GA1224S4001	9GA1224S4D001	9GA1224P4S001	120 × 120 × 25 mm	Yes	154
9GA1224P4S0011	—	9GA1224S40011	—	9GA1224P4S0011	120 × 120 × 25 mm	No	154
9GA1224S4001	9GA1224S4002	9GA1224S4001	—	9GA1224P4S001	120 × 120 × 25 mm	Yes	154
9GA1224S40011	—	9GA1224S40011	—	9GA1224P4S0011	120 × 120 × 25 mm	No	154
9GA1248G4001	—	9GA1248G4001	—	9GA1248P4G001	120 × 120 × 25 mm	Yes	154
9GA1248G40011	—	9GA1248G40011	—	9GA1248P4G0011	120 × 120 × 25 mm	No	154
9GA1248P4G001	—	9GA1248G4001	—	9GA1248P4G001	120 × 120 × 25 mm	Yes	154
9GA1248P4G0011	—	9GA1248G40011	—	9GA1248P4G0011	120 × 120 × 25 mm	No	154
9GA1248P4S001	—	9GA1248S4001	—	9GA1248P4S001	120 × 120 × 25 mm	Yes	154
9GA1248P4S0011	—	9GA1248S40011	—	9GA1248P4S0011	120 × 120 × 25 mm	No	154
9GA1248S4001	—	9GA1248S4001	—	9GA1248P4S001	120 × 120 × 25 mm	Yes	154
9GA1248S40011	—	9GA1248S40011	—	9GA1248P4S0011	120 × 120 × 25 mm	No	154
9GAX0412P3K001	—	—	—	9GAX0412P3K001	40 × 40 × 28 mm	Yes	38
9GAX0412P3K0011	—	—	—	9GAX0412P3K0011	40 × 40 × 28 mm	No	38
9GAX0412P3K003	—	—	—	9GAX0412P3K003	40 × 40 × 28 mm	Yes	38
9GAX0412P3K0031	—	—	—	9GAX0412P3K0031	40 × 40 × 28 mm	No	38
9GAX0412P3S001	—	—	—	9GAX0412P3S001	40 × 40 × 28 mm	Yes	38
9GAX0412P3S0011	—	—	—	9GAX0412P3S0011	40 × 40 × 28 mm	No	38
9GAX0412P3S003	—	—	—	9GAX0412P3S003	40 × 40 × 28 mm	Yes	38
9GAX0412P3S0031	—	—	—	9GAX0412P3S0031	40 × 40 × 28 mm	No	38

Note 1: For compliance with standards, see individual product pages. Please contact your point of sale regarding low-speed sensors.
Note 2: The mark indicates Short Lead Time Service applicable models. See p. 664 for details.

Models listed in product pages	List of models (The models listed on the right of the models listed in product pages are option models. Option models may not necessarily comply with the same standards as the models listed in product pages. Contact us for details of the "—" models.)				Frame size	Rib	page
	Without sensor	With pulse sensor	With lock sensor	With PWM control and pulse sensor			
9GE0412P3G03	—	—	9GE0412G3D01	9GE0412P3G03	40 × 40 × 28 mm	No	47
9GE0412P3J03	9GE0412J302	9GE0412J301	9GE0412J3D01	9GE0412P3J03	40 × 40 × 28 mm	No	47
9GE0412P3K03	—	9GE0412K301	9GE0412K3D01	9GE0412P3K03	40 × 40 × 28 mm	No	47
9GP1224P1G001	9GP1224G1002	—	—	9GP1224P1G001	120 × 120 × 38 mm	No	432
9GP1248P1G001	—	—	—	9GP1248P1G001	120 × 120 × 38 mm	No	432
9GP5724P5H001	—	—	—	9GP5724P5H001	Ø172 × 150 × 51 mm	No	434
9GP5748P5G001	—	—	—	9GP5748P5G001	Ø172 × 150 × 51 mm	No	434
9GT0412P3J001	9GT0412J3002	9GT0412J3001	9GT0412J3D001	9GT0412P3J001	40 × 40 × 28 mm	No	418
9GT0424P3J001	9GT0424J3002	9GT0424J3001	9GT0424J3D001	9GT0424P3J001	40 × 40 × 28 mm	No	418
9GT0612P4G001	9GT0612G4002	9GT0612G4001	9GT0612G4D001	9GT0612P4G001	60 × 60 × 25 mm	No	420
9GT0624P4G001	9GT0624G4002	9GT0624G4001	—	9GT0624P4G001	60 × 60 × 25 mm	No	420
9GT0812P4S001	9GT0812S4002	9GT0812S4001	9GT0812S4D001	9GT0812P4S001	80 × 80 × 25 mm	No	422
9GT0824P4S001	9GT0824S4002	9GT0824S4001	9GT0824S4D001	9GT0824P4S001	80 × 80 × 25 mm	No	422
9GT0912P1M001	9GT0912M1002	9GT0912M1001	9GT0912M1D001	9GT0912P1M001	92 × 92 × 38 mm	No	426
9GT0912P4J001	9GT0912J4002	9GT0912J4001	9GT0912J4D001	9GT0912P4J001	92 × 92 × 25 mm	No	424
9GT0924P1M001	9GT0924M1002	—	9GT0924M1D001	9GT0924P1M001	92 × 92 × 38 mm	No	426
9GT0924P4J001	9GT0924J4002	9GT0924J4001	9GT0924J4D001	9GT0924P4J001	92 × 92 × 25 mm	No	424
9GT1212P1S001	9GT1212S1002	—	—	9GT1212P1S001	120 × 120 × 38 mm	No	428
9GT1224P1S001	9GT1224S1002	—	9GT1224S1D001	9GT1224P1S001	120 × 120 × 38 mm	No	428
9GV0612P1G03	9GV0612G102	9GV0612G101	9GV0612G1D01	9GV0612P1G03	60 × 60 × 38 mm	Yes	84
9GV0612P1G031	9GV0612G1021	9GV0612G1011	9GV0612G1D011	9GV0612P1G031	60 × 60 × 38 mm	No	84
9GV0624P1G03	9GV0624G102	—	9GV0624G1D01	9GV0624P1G03	60 × 60 × 38 mm	Yes	84
9GV0624P1G031	9GV0624G1021	—	—	9GV0624P1G031	60 × 60 × 38 mm	No	84
9GV0812P1G03	9GV0812G102	9GV0812G101	—	9GV0812P1G03	80 × 80 × 38 mm	Yes	118
9GV0812P1G031	9GV0812G1021	9GV0812G1011	—	9GV0812P1G031	80 × 80 × 38 mm	No	118
9GV0812P1H03	9GV0812H102	9GV0812H101	—	9GV0812P1H03	80 × 80 × 38 mm	Yes	118
9GV0812P1H031	9GV0812H1021	9GV0812H1011	—	9GV0812P1H031	80 × 80 × 38 mm	No	118
9GV0824P1G03	9GV0824G102	9GV0824G101	9GV0824G1D01	9GV0824P1G03	80 × 80 × 38 mm	Yes	118
9GV0824P1G031	—	—	—	9GV0824P1G031	80 × 80 × 38 mm	No	118
9GV0848P1G03	9GV0848G102	9GV0848G101	—	9GV0848P1G03	80 × 80 × 38 mm	Yes	118
9GV0848P1G031	—	9GV0848G1011	—	9GV0848P1G031	80 × 80 × 38 mm	No	118
9GV0912P1F03	—	—	—	9GV0912P1F03	92 × 92 × 38 mm	Yes	146
9GV0912P1F031	—	—	—	9GV0912P1F031	92 × 92 × 38 mm	No	146
9GV0912P1G03	9GV0912G102	—	9GV0912G1D01	9GV0912P1G03	92 × 92 × 38 mm	Yes	146
9GV0912P1G031	—	—	—	9GV0912P1G031	92 × 92 × 38 mm	No	146
9GV0912P1H03	9GV0912H102	9GV0912H101	9GV0912H1D01	9GV0912P1H03	92 × 92 × 38 mm	Yes	146
9GV0912P1H031	—	—	—	9GV0912P1H031	92 × 92 × 38 mm	No	146
9GV0948P1F03	—	—	—	9GV0948P1F03	92 × 92 × 38 mm	Yes	146
9GV0948P1F031	—	—	—	9GV0948P1F031	92 × 92 × 38 mm	No	146
9GV0948P1H03	9GV0948H102	9GV0948H101	—	9GV0948P1H03	92 × 92 × 38 mm	Yes	146
9GV0948P1H031	9GV0948H1021	—	—	9GV0948P1H031	92 × 92 × 38 mm	No	146
9GV1212P1G01	—	—	—	9GV1212P1G01	120 × 120 × 38 mm	Yes	172
9GV1212P1G011	—	9GV1212G1011	9GV1212G1D011	9GV1212P1G011	120 × 120 × 38 mm	No	172
9GV1212P1J01	9GV1212J102	9GV1212J101	9GV1212J1D01	9GV1212P1J01	120 × 120 × 38 mm	Yes	172
9GV1212P1J011	9GV1212J1021	9GV1212J1011	—	9GV1212P1J011	120 × 120 × 38 mm	No	172
9GV1212P4G01	9GV1212G402	9GV1212G401	9GV1212G4D01	9GV1212P4G01	120 × 120 × 25 mm	Yes	158
9GV1212P4G011	9GV1212G4021	9GV1212G4011	—	9GV1212P4G011	120 × 120 × 25 mm	No	158
9GV1224P1H01	9GV1224H102	9GV1224H101	9GV1224H1D01	9GV1224P1H01	120 × 120 × 38 mm	Yes	172
9GV1224P1H011	9GV1224H1021	9GV1224H1011	9GV1224H1D011	9GV1224P1H011	120 × 120 × 38 mm	No	172
9GV1224P1J01	9GV1224J102	9GV1224J101	9GV1224J1D01	9GV1224P1J01	120 × 120 × 38 mm	Yes	172
9GV1224P1J011	9GV1224J1021	9GV1224J1011	9GV1224J1D011	9GV1224P1J011	120 × 120 × 38 mm	No	172
9GV1224P4G01	9GV1224G402	9GV1224G401	9GV1224G4D01	9GV1224P4G01	120 × 120 × 25 mm	Yes	158
9GV1224P4G011	9GV1224G4021	—	—	9GV1224P4G011	120 × 120 × 25 mm	No	158
9GV1248P1J01	9GV1248J102	9GV1248J101	9GV1248J1D01	9GV1248P1J01	120 × 120 × 38 mm	Yes	172
9GV1248P1J011	9GV1248J1021	9GV1248J1011	—	9GV1248P1J011	120 × 120 × 38 mm	No	172
9GV1248P4G01	9GV1248G402	9GV1248G401	—	9GV1248P4G01	120 × 120 × 25 mm	Yes	158
9GV1248P4G011	—	9GV1248G4011	—	9GV1248P4G011	120 × 120 × 25 mm	No	158

Note 1: For compliance with standards, see individual product pages. Please contact your point of sale regarding low-speed sensors.
Note 2: The » mark indicates Short Lead Time Service applicable models. See p. 664 for details.

Models listed in product pages	List of models (The models listed on the right of the models listed in product pages are option models. Option models may not necessarily comply with the same standards as the models listed in product pages. Contact us for details of the "—" models.)				Frame size	Rib	page
	Without sensor	With pulse sensor	With lock sensor	With PWM control and pulse sensor			
9GV1248P4H01	9GV1248H402	9GV1248H401	9GV1248H4D01	9GV1248P4H01	120 × 120 × 25 mm	Yes	158
9GV1248P4H011	—	—	—	9GV1248P4H011	120 × 120 × 25 mm	No	158
9GV1248P4J01	—	—	—	9GV1248P4J01	120 × 120 × 25 mm	Yes	158
9GV1248P4J011	—	—	—	9GV1248P4J011	120 × 120 × 25 mm	No	158
9GV1412P1G001	—	—	—	9GV1412P1G001	140 × 140 × 38 mm	No	179
9GV1412P1H001	9GV1412H1002	—	—	9GV1412P1H001	140 × 140 × 38 mm	No	179
9GV1412P1S001	—	—	—	9GV1412P1S001	140 × 140 × 38 mm	No	179
9GV1424P1G001	—	—	—	9GV1424P1G001	140 × 140 × 38 mm	No	179
9GV1424P1H001	9GV1424H1002	—	9GV1424H1D001	9GV1424P1H001	140 × 140 × 38 mm	No	179
9GV1424P1S001	—	—	—	9GV1424P1S001	140 × 140 × 38 mm	No	179
9GV1448P1G001	—	—	—	9GV1448P1G001	140 × 140 × 38 mm	No	179
9GV1448P1H001	9GV1448H1002	—	—	9GV1448P1H001	140 × 140 × 38 mm	No	179
9GV1448P1S001	—	—	—	9GV1448P1S001	140 × 140 × 38 mm	No	179
9GV1512H501	9GV1512H502	9GV1512H501	—	—	150 × 150 × 50 mm	Yes	187
9GV1512H5011	9GV1512H5021	9GV1512H5011	—	—	150 × 150 × 50 mm	No	187
9GV1512M501	9GV1512M502	9GV1512M501	—	9GV1512P5M03	150 × 150 × 50 mm	Yes	187
9GV1512M5011	9GV1512M5021	9GV1512M5011	—	9GV1512P5M011	150 × 150 × 50 mm	No	187
9GV1524M501	9GV1524M502	9GV1524M501	9GV1524M5D01	—	150 × 150 × 50 mm	Yes	187
9GV1524M5011	—	9GV1524M5011	—	—	150 × 150 × 50 mm	No	187
9GV2048P0G201	9GV2048G0202	—	—	9GV2048P0G201	Ø200 × 70 mm	No	203
9GV3612P3G03	9GV3612G302	9GV3612G301	9GV3612G3D01	9GV3612P3G03	36 × 36 × 28 mm	Yes	18
9GV3612P3J03	9GV3612J302	9GV3612J301	9GV3612J3D01	9GV3612P3J03	36 × 36 × 28 mm	Yes	18
9GX3612P3K001	9GX3612K3002	—	—	9GX3612P3K001	36 × 36 × 28 mm	Yes	16
9HV0412P3K001	—	—	—	9HV0412P3K001	40 × 40 × 28 mm	No	41
9HV0612P1J001	—	—	—	9HV0612P1J001	60 × 60 × 38 mm	Yes	78
9HV0612P1J0011	—	—	—	9HV0612P1J0011	60 × 60 × 38 mm	No	78
9HV0812P1G601	9HV0812G1002	9HV0812G1001	—	9HV0812P1G601	80 × 80 × 38 mm	Yes	112
9HV0812P1G6011	9HV0812G10021	9HV0812G10011	—	9HV0812P1G6011	80 × 80 × 38 mm	No	112
9HV0812P1H601	—	—	—	9HV0812P1H601	80 × 80 × 38 mm	Yes	112
9HV0812P1H6011	—	—	—	9HV0812P1H6011	80 × 80 × 38 mm	No	112
9HV0812P1S601	—	—	—	9HV0812P1S601	80 × 80 × 38 mm	Yes	112
9HV0812P1S6011	—	—	—	9HV0812P1S6011	80 × 80 × 38 mm	No	112
9HV0824P1G003	—	—	9HV0824G1D001	9HV0824P1G003	80 × 80 × 38 mm	Yes	112
9HV0824P1G0011	—	—	—	9HV0824P1G0011	80 × 80 × 38 mm	No	112
9HV0848P1G001	9HV0848G1002	9HV0848G1001	9HV0848G1D001	9HV0848P1G001	80 × 80 × 38 mm	Yes	112
9HV0848P1G0011	9HV0848G10021	9HV0848G10011	—	9HV0848P1G0011	80 × 80 × 38 mm	No	112
9HV0912P1G001	—	—	—	9HV0912P1G001	92 × 92 × 38 mm	Yes	140
9HV0912P1G0011	—	—	—	9HV0912P1G0011	92 × 92 × 38 mm	No	140
9HV0924P1G001	—	—	9HV0924G1D001	9HV0924P1G001	92 × 92 × 38 mm	Yes	140
9HV0924P1G0011	—	—	—	9HV0924P1G0011	92 × 92 × 38 mm	No	140
9HV0948P1G001	—	—	—	9HV0948P1G001	92 × 92 × 38 mm	Yes	140
9HV0948P1G0011	—	—	—	9HV0948P1G0011	92 × 92 × 38 mm	No	140
9HV0912P4G001	—	—	—	9HV0912P4G001	92 × 92 × 25 mm	Yes	125
9HV0912P4G0011	—	—	—	9HV0912P4G0011	92 × 92 × 25 mm	No	125
9HV0912P4H001	—	—	9HV0912H4D001	9HV0912P4H001	92 × 92 × 25 mm	Yes	125
9HV0912P4H0011	—	—	—	9HV0912P4H0011	92 × 92 × 25 mm	No	125
9HV0924P4G001	—	—	—	9HV0924P4G001	92 × 92 × 25 mm	Yes	125
9HV0924P4G0011	—	—	—	9HV0924P4G0011	92 × 92 × 25 mm	No	125
9HV0924P4H001	—	—	—	9HV0924P4H001	92 × 92 × 25 mm	Yes	125
9HV0924P4H0011	—	—	—	9HV0924P4H0011	92 × 92 × 25 mm	No	125
9HV1224P1A001	—	—	9HV1224A1D001	9HV1224P1A001	120 × 120 × 38 mm	No	167
9HV1248P1G001	9HV1248G1002	9HV1248G1001	9HV1248G1D001	9HV1248P1G001	120 × 120 × 38 mm	No	167
9HV1248P1H001	9HV1248H1002	9HV1248H1001	—	9HV1248P1H001	120 × 120 × 38 mm	No	167
9HV3612P3K001	—	—	—	9HV3612P3K001	36 × 36 × 28 mm	Yes	14
9HV5724P5H001	9HV5724H5002	9HV5724H5001	9HV5724H5D001	9HV5724P5H001	Ø172 × 150 × 51 mm	No	192
9HV5748P5G001	—	—	—	9HV5748P5G001	Ø172 × 150 × 51 mm	No	192
9HVA0412P3J001	—	—	9HVA0412J3D001	9HVA0412P3J001	40 × 40 × 28 mm	Yes	36

Note 1: For compliance with standards, see individual product pages. Please contact your point of sale regarding low-speed sensors.
Note 2: The » mark indicates Short Lead Time Service applicable models. See p. 664 for details.

Models listed in product pages	List of models (The models listed on the right of the models listed in product pages are option models. Option models may not necessarily comply with the same standards as the models listed in product pages. Contact us for details of the "—" models.)				Frame size	Rib	page
	Without sensor	With pulse sensor	With lock sensor	With PWM control and pulse sensor			
9HVA0424P3G001	—	—	—	9HVA0424P3G001	40 × 40 × 28 mm	Yes	36
9HVA0612P1J001	—	—	—	9HVA0612P1J001	60 × 60 × 38 mm	Yes	76
9HVA0612P1J0011	—	—	—	9HVA0612P1J0011	60 × 60 × 38 mm	No	76
9HVA0848P1G601	—	—	—	9HVA0848P1G601	80 × 80 × 38 mm	Yes	110
9HVA0848P1G6011	—	—	—	9HVA0848P1G6011	80 × 80 × 38 mm	No	110
9HVB0812P1G001	—	—	—	9HVB0812P1G001	80 × 80 × 38 mm	Yes	108
9HVB0812P1G0011	—	—	—	9HVB0812P1G0011	80 × 80 × 38 mm	No	108
9HVB0812P1S001	—	—	—	9HVB0812P1S001	80 × 80 × 38 mm	Yes	108
9HVB0812P1S0011	—	—	—	9HVB0812P1S0011	80 × 80 × 38 mm	No	108
9L0412H301	9L0412H302	9L0412H301	9L0412H3D01	—	40 × 40 × 28 mm	No	371
9L0412J301	9L0412J302	9L0412J301	9L0412J3D01	9L0412P3J01	40 × 40 × 28 mm	No	371
9L0412M301	9L0412M302	9L0412M301	9L0412M3D01	—	40 × 40 × 28 mm	No	371
9LG0412P3G001	—	—	—	9LG0412P3G001	40 × 40 × 28 mm	No	368
9LG0412P3H001	—	—	—	9LG0412P3G001	40 × 40 × 28 mm	No	368
9LG0412P3S001	—	—	—	9LG0412P3G001	40 × 40 × 28 mm	No	368
9LG0424P3G001	—	—	—	9LG0424P3G001	40 × 40 × 28 mm	No	368
9LG0424P3H001	—	—	—	9LG0424P3H001	40 × 40 × 28 mm	No	368
9LG0424P3S001	—	—	—	9LG0424P3S001	40 × 40 × 28 mm	No	368
9LG0612P4H001	9LG0612H4002	9LG0612H4001	9LG0612H4D001	9LG0612P4H001	60 × 60 × 25 mm	No	373
9LG0612P4J001	—	—	9LG0612J4D001	9LG0612P4J001	60 × 60 × 25 mm	No	373
9LG0612P4M001	—	—	9LG0612M4D001	9LG0612P4M001	60 × 60 × 25 mm	No	373
9LG0612P4S001	—	9LG0612S4001	9LG0612S4D001	9LG0612P4S001	60 × 60 × 25 mm	No	373
9LG0624P4H001	9LG0624H4002	9LG0624H4001	9LG0624H4D001	9LG0624P4H001	60 × 60 × 25 mm	No	373
9LG0624P4J001	—	—	—	9LG0624P4J001	60 × 60 × 25 mm	No	373
9LG0624P4M001	9LG0624M4002	9LG0624M4001	9LG0624M4D001	9LG0624P4M001	60 × 60 × 25 mm	No	373
9LG0624P4S001	9LG0624S4002	9LG0624S4001	—	9LG0624P4S001	60 × 60 × 25 mm	No	373
9LG0648P4H001	—	—	—	9LG0648P4H001	60 × 60 × 25 mm	No	373
9LG0648P4J001	—	—	—	9LG0648P4J001	60 × 60 × 25 mm	No	373
9LG0648P4M001	—	—	—	9LG0648P4M001	60 × 60 × 25 mm	No	373
9LG0648P4S001	—	—	9LG0648S4D001	9LG0648P4S001	60 × 60 × 25 mm	No	373
9LG0812F4001	9LG0812F4002	9LG0812F4001	9LG0812F4D001	—	80 × 80 × 25 mm	No	382
9LG0812L4001	9LG0812L4002	9LG0812L4001	9LG0812L4D001	—	80 × 80 × 25 mm	No	382
9LG0812M4001	9LG0812M4002	9LG0812M4001	9LG0812M4D001	—	80 × 80 × 25 mm	No	382
9LG0812P4G001	—	9LG0812G4001	9LG0812G4D001	9LG0812P4G001	80 × 80 × 25 mm	No	382
9LG0812P4H001	9LG0812H4002	9LG0812H4001	9LG0812H4D001	9LG0812P4H001	80 × 80 × 25 mm	No	382
9LG0812P4J001	9LG0812J4002	—	9LG0812J4D001	9LG0812P4J001	80 × 80 × 25 mm	No	382
9LG0812S4001	9LG0812S4002	9LG0812S4001	9LG0812S4D001	—	80 × 80 × 25 mm	No	382
9LG0824F4001	9LG0824F4002	9LG0824F4001	9LG0824F4D001	—	80 × 80 × 25 mm	No	382
9LG0824L4001	9LG0824L4002	9LG0824L4001	9LG0824L4D001	—	80 × 80 × 25 mm	No	382
9LG0824M4001	9LG0824M4002	9LG0824M4001	9LG0824M4D001	—	80 × 80 × 25 mm	No	382
9LG0824P4G001	9LG0824G4002	9LG0824G4001	9LG0824G4D001	9LG0824P4G001	80 × 80 × 25 mm	No	382
9LG0824P4H001	9LG0824H4002	9LG0824H4001	9LG0824H4D001	9LG0824P4H001	80 × 80 × 25 mm	No	382
9LG0824P4J001	—	—	9LG0824J4D001	9LG0824P4J001	80 × 80 × 25 mm	No	382
9LG0824S4001	9LG0824S4002	9LG0824S4001	9LG0824S4D001	—	80 × 80 × 25 mm	No	382
9LG0912F4001	9LG0912F4002	9LG0912F4001	9LG0912F4D001	—	92 × 92 × 25 mm	No	389
9LG0912L4001	9LG0912L4002	9LG0912L4001	9LG0912L4D001	—	92 × 92 × 25 mm	No	389
9LG0912M4001	9LG0912M4002	9LG0912M4001	9LG0912M4D001	—	92 × 92 × 25 mm	No	389
9LG0912P1F001	—	—	—	9LG0912P1F001	92 × 92 × 38 mm	No	394
9LG0912P1H001	—	—	9LG0912H1D001	9LG0912P1H001	92 × 92 × 38 mm	No	394
9LG0912P4G001	9LG0912G4002	—	—	9LG0912P4G001	92 × 92 × 25 mm	No	389
9LG0912P4H001	9LG0912H4002	9LG0912H4001	9LG0912H4D001	9LG0912P4H001	92 × 92 × 25 mm	No	389
9LG0912P4J001	—	—	9LG0912J4D001	9LG0912P4J001	92 × 92 × 25 mm	No	389
9LG0912P4S001	9LG0912S4002	9LG0912S4001	9LG0912S4D001	9LG0912P4S001	92 × 92 × 25 mm	No	389
9LG0924F4001	9LG0924F4002	9LG0924F4001	9LG0924F4D001	—	92 × 92 × 25 mm	No	389
9LG0924L4001	9LG0924L4002	9LG0924L4001	9LG0924L4D001	—	92 × 92 × 25 mm	No	389
9LG0924M4001	9LG0924M4002	9LG0924M4001	9LG0924M4D001	—	92 × 92 × 25 mm	No	389
9LG0924P1F001	—	—	—	9LG0924P1F001	92 × 92 × 38 mm	No	394

Note 1: For compliance with standards, see individual product pages. Please contact your point of sale regarding low-speed sensors.
Note 2: The mark indicates Short Lead Time Service applicable models. See p. 664 for details.

Models listed in product pages	List of models (The models listed on the right of the models listed in product pages are option models. Option models may not necessarily comply with the same standards as the models listed in product pages. Contact us for details of the "—" models.)				Frame size	Rib	page
	Without sensor	With pulse sensor	With lock sensor	With PWM control and pulse sensor			
9LG0924P1H001	—	—	—	9LG0924P1H001	92 × 92 × 38 mm	No	394
9LG0924P4G001	—	—	—	9LG0924P4G001	92 × 92 × 25 mm	No	389
9LG0924P4H001	9LG0924H4002	9LG0924H4001	9LG0924H4D001	9LG0924P4H001	92 × 92 × 25 mm	No	389
9LG0924P4J001	—	—	9LG0924J4D001	9LG0924P4J001	92 × 92 × 25 mm	No	389
9LG0924P4S001	—	—	9LG0924S4D001	9LG0924P4S001	92 × 92 × 25 mm	No	389
9LG0948H4001	—	9LG0948H4001	9LG0948H4D001	—	92 × 92 × 25 mm	No	389
9LG1212F1001	9LG1212F1002	9LG1212F1001	9LG1212F1D001	—	120 × 120 × 38 mm	No	397
9LG1212M1001	9LG1212M1002	9LG1212M1001	9LG1212M1D001	—	120 × 120 × 38 mm	No	397
9LG1212P1G001	—	9LG1212G1001	9LG1212G1D001	9LG1212P1G001	120 × 120 × 38 mm	No	397
9LG1212P1H001	—	—	9LG1212H1D001	9LG1212P1H001	120 × 120 × 38 mm	No	397
9LG1212P1S001	—	—	—	9LG1212P1S001	120 × 120 × 38 mm	No	397
9LG1224A1001	9LG1224A1002	9LG1224A1001	9LG1224A1D001	—	120 × 120 × 38 mm	No	397
9LG1224F1001	9LG1224F1002	9LG1224F1001	9LG1224F1D001	—	120 × 120 × 38 mm	No	397
9LG1224M1001	9LG1224M1002	9LG1224M1001	9LG1224M1D001	—	120 × 120 × 38 mm	No	397
9LG1224P1G001	9LG1224G1002	9LG1224G1001	9LG1224G1D001	9LG1224P1G001	120 × 120 × 38 mm	No	397
9LG1224P1H001	9LG1224H1002	9LG1224H1001	9LG1224H1D001	9LG1224P1H001	120 × 120 × 38 mm	No	397
9LG1224P1S001	—	9LG1224S1001	9LG1224S1D001	9LG1224P1S001	120 × 120 × 38 mm	No	397
9LG1248F1001	9LG1248F1002	9LG1248F1001	9LG1248F1D001	—	120 × 120 × 38 mm	No	397
9LG1248M1001	9LG1248M1002	9LG1248M1001	9LG1248M1D001	—	120 × 120 × 38 mm	No	397
9LG1248P1G001	9LG1248G1002	9LG1248G1001	—	9LG1248P1G001	120 × 120 × 38 mm	No	397
9LG1248P1H001	—	—	—	9LG1248P1H001	120 × 120 × 38 mm	No	397
9LG1248P1S001	—	—	—	9LG1248P1S001	120 × 120 × 38 mm	No	397
9LG1412A5001	9LG1412A5002	9LG1412A5001	9LG1412A5D001	—	140 × 140 × 51 mm	No	407
9LG1412H5001	9LG1412H5002	9LG1412H5001	9LG1412H5D001	—	140 × 140 × 51 mm	No	407
9LG1412L1001	9LG1412L1002	9LG1412L1001	—	—	140 × 140 × 38 mm	No	402
9LG1412M5001	9LG1412M5002	9LG1412M5001	9LG1412M5D001	—	140 × 140 × 51 mm	No	407
9LG1412P1A001	—	—	—	9LG1412P1A001	140 × 140 × 38 mm	No	402
9LG1412P1H001	—	—	—	9LG1412P1H001	140 × 140 × 38 mm	No	402
9LG1412P1M001	9LG1412M1002	9LG1412M1001	9LG1412M1D001	9LG1412P1M001	140 × 140 × 38 mm	No	402
9LG1412P5G001	—	—	—	9LG1412P5G001	140 × 140 × 51 mm	No	407
9LG1412P5S001	—	9LG1412S5001	—	9LG1412P5S001	140 × 140 × 51 mm	No	407
9LG1424A5001	9LG1424A5002	9LG1424A5001	9LG1424A5D001	—	140 × 140 × 51 mm	No	407
9LG1424H5001	9LG1424H5002	9LG1424H5001	9LG1424H5D001	—	140 × 140 × 51 mm	No	407
9LG1424L1001	9LG1424L1002	9LG1424L1001	9LG1424L1D001	—	140 × 140 × 38 mm	No	402
9LG1424M5001	9LG1424M5002	9LG1424M5001	9LG1424M5D001	—	140 × 140 × 51 mm	No	407
9LG1424P1A001	—	—	—	9LG1424P1A001	140 × 140 × 38 mm	No	402
9LG1424P1H001	—	—	—	9LG1424P1H001	140 × 140 × 38 mm	No	402
9LG1424P1M001	9LG1424M1002	9LG1424M1001	9LG1424M1D001	9LG1424P1M001	140 × 140 × 38 mm	No	402
9LG1424P5G001	—	—	—	9LG1424P5G001	140 × 140 × 51 mm	No	407
9LG1424P5S001	9LG1424S5002	9LG1424S5001	9LG1424S5D001	9LG1424P5S001	140 × 140 × 51 mm	No	407
9LG1448A5001	9LG1448A5002	9LG1448A5001	9LG1448A5D001	—	140 × 140 × 51 mm	No	407
9LG1448H5001	9LG1448H5002	9LG1448H5001	9LG1448H5D001	—	140 × 140 × 51 mm	No	407
9LG1448L1001	9LG1448L1002	9LG1448L1001	9LG1448L1D001	—	140 × 140 × 38 mm	No	402
9LG1448M5001	9LG1448M5002	9LG1448M5001	9LG1448M5D001	—	140 × 140 × 51 mm	No	407
9LG1448P1A001	—	—	—	9LG1448P1A001	140 × 140 × 38 mm	No	402
9LG1448P1H001	—	—	—	9LG1448P1H001	140 × 140 × 38 mm	No	402
9LG1448P1M001	9LG1448M1002	9LG1448M1001	9LG1448M1D001	9LG1448P1M001	140 × 140 × 38 mm	No	402
9LG1448P5G001	—	—	—	9LG1448P5G001	140 × 140 × 51 mm	No	407
9LG1448P5S001	—	—	—	9LG1448P5S001	140 × 140 × 51 mm	No	407
9RA0612F4001	9RA0612F4002	9RA0612F4001	—	—	60 × 60 × 25 mm	Yes	70
9RA0612F40011	9RA0612F40021	9RA0612F40011	—	—	60 × 60 × 25 mm	No	70
9RA0612G4001	9RA0612G4002	9RA0612G4001	9RA0612G4D001	9RA0612P4G001	60 × 60 × 25 mm	Yes	70
9RA0612G40011	9RA0612G40021	9RA0612G40011	9RA0612G4D0011	—	60 × 60 × 25 mm	No	70
9RA0612H4001	9RA0612H4002	9RA0612H4001	9RA0612H4D001	9RA0612P4H001	60 × 60 × 25 mm	Yes	70
9RA0612H40011	9RA0612H40021	9RA0612H40011	9RA0612H4D0011	9RA0612P4H0011	60 × 60 × 25 mm	No	70
9RA0612J4001	9RA0612J4002	9RA0612J4001	9RA0612J4D001	9RA0612P4J001	60 × 60 × 25 mm	Yes	70
9RA0612J40011	9RA0612J40021	9RA0612J40011	9RA0612J4D0011	9RA0612P4J0011	60 × 60 × 25 mm	No	70

Note 1: For compliance with standards, see individual product pages. Please contact your point of sale regarding low-speed sensors.
Note 2: The mark indicates Short Lead Time Service applicable models. See p. 664 for details.

Models listed in product pages	List of models (The models listed on the right of the models listed in product pages are option models. Option models may not necessarily comply with the same standards as the models listed in product pages. Contact us for details of the "—" models.)				Frame size	Rib	page
	Without sensor	With pulse sensor	With lock sensor	With PWM control and pulse sensor			
9RA0612M4001	9RA0612M4002	9RA0612M4001	—	—	60 × 60 × 25 mm	Yes	70
9RA0612M40011	9RA0612M40021	9RA0612M40011	—	—	60 × 60 × 25 mm	No	70
9RA0612P4J001	9RA0612J4002	9RA0612J4001	9RA0612J4D001	9RA0612P4J001	60 × 60 × 25 mm	Yes	70
9RA0612P4J0011	9RA0612J40021	9RA0612J40011	9RA0612J4D0011	9RA0612P4J0011	60 × 60 × 25 mm	No	70
9RA0612S4001	9RA0612S4002	9RA0612S4001	9RA0612S4D001	9RA0612P4S001	60 × 60 × 25 mm	Yes	70
9RA0612S40011	9RA0612S40021	9RA0612S40011	9RA0612S4D0011	9RA0612P4S0011	60 × 60 × 25 mm	No	70
9RA0624F4001	9RA0624F4002	9RA0624F4001	—	—	60 × 60 × 25 mm	Yes	70
9RA0624F40011	9RA0624F40021	9RA0624F40011	—	—	60 × 60 × 25 mm	No	70
9RA0624G4001	9RA0624G4002	9RA0624G4001	9RA0624G4D001	—	60 × 60 × 25 mm	Yes	70
9RA0624G40011	9RA0624G40021	9RA0624G40011	9RA0624G4D0011	—	60 × 60 × 25 mm	No	70
9RA0624H4001	9RA0624H4002	9RA0624H4001	9RA0624H4D001	—	60 × 60 × 25 mm	Yes	70
9RA0624H40011	9RA0624H40021	9RA0624H40011	9RA0624H4D0011	—	60 × 60 × 25 mm	No	70
9RA0624J4001	9RA0624J4002	9RA0624J4001	9RA0624J4D001	9RA0624P4J001	60 × 60 × 25 mm	Yes	70
9RA0624J40011	9RA0624J40021	9RA0624J40011	9RA0624J4D0011	9RA0624P4J0011	60 × 60 × 25 mm	No	70
9RA0624M4001	9RA0624M4002	9RA0624M4001	—	—	60 × 60 × 25 mm	Yes	70
9RA0624M40011	9RA0624M40021	9RA0624M40011	—	—	60 × 60 × 25 mm	No	70
9RA0624P4J001	9RA0624J4002	9RA0624J4001	9RA0624J4D001	9RA0624P4J001	60 × 60 × 25 mm	Yes	70
9RA0624P4J0011	9RA0624J40021	9RA0624J40011	9RA0624J4D0011	9RA0624P4J0011	60 × 60 × 25 mm	No	70
9RA0624S4001	9RA0624S4002	9RA0624S4001	9RA0624S4D001	—	60 × 60 × 25 mm	Yes	70
9RA0624S40011	9RA0624S40021	9RA0624S40011	9RA0624S4D0011	—	60 × 60 × 25 mm	No	70
9RA0648G4001	9RA0648G4002	9RA0648G4001	9RA0648G4D001	—	60 × 60 × 25 mm	Yes	70
9RA0648G40011	9RA0648G40021	9RA0648G40011	9RA0648G4D0011	—	60 × 60 × 25 mm	No	70
9RA0648J4001	9RA0648J4002	9RA0648J4001	9RA0648J4D001	9RA0648P4J001	60 × 60 × 25 mm	Yes	70
9RA0648J40011	9RA0648J40021	9RA0648J40011	9RA0648J4D0011	9RA0648P4J0011	60 × 60 × 25 mm	No	70
9RA0648P4J001	9RA0648J4002	9RA0648J4001	9RA0648J4D001	9RA0648P4J001	60 × 60 × 25 mm	Yes	70
9RA0648P4J0011	9RA0648J40021	9RA0648J40011	9RA0648J4D0011	9RA0648P4J0011	60 × 60 × 25 mm	No	70
9RA0812G1001	9RA0812G1002	9RA0812G1001	9RA0812G1D001	9RA0812P1G001	80 × 80 × 38 mm	Yes	121
9RA0812G10011	9RA0812G10021	9RA0812G10011	9RA0812G1D0011	9RA0812P1G0011	80 × 80 × 38 mm	No	121
9RA0812G4001	9RA0812G4002	9RA0812G4001	9RA0812G4D001	9RA0812P4G001	80 × 80 × 25 mm	Yes	98
9RA0812G40011	9RA0812G40021	9RA0812G40011	9RA0812G4D0011	9RA0812P4G0011	80 × 80 × 25 mm	No	98
9RA0812H1001	9RA0812H1002	9RA0812H1001	9RA0812H1D001	9RA0812P1H001	80 × 80 × 38 mm	Yes	121
9RA0812H10011	9RA0812H10021	9RA0812H10011	9RA0812H1D0011	9RA0812P1H0011	80 × 80 × 38 mm	No	121
9RA0812H4001	9RA0812H4002	9RA0812H4001	9RA0812H4D001	9RA0812P4H001	80 × 80 × 25 mm	Yes	98
9RA0812H40011	9RA0812H40021	9RA0812H40011	9RA0812H4D0011	—	80 × 80 × 25 mm	No	98
9RA0812K1001	9RA0812K1002	9RA0812K1001	9RA0812K1D001	9RA0812P1K001	80 × 80 × 38 mm	Yes	121
9RA0812K10011	9RA0812K10021	9RA0812K10011	9RA0812K1D0011	9RA0812P1K0011	80 × 80 × 38 mm	No	121
9RA0812M4001	9RA0812M4002	9RA0812M4001	9RA0812M4D001	—	80 × 80 × 25 mm	Yes	98
9RA0812M40011	9RA0812M40021	9RA0812M40011	9RA0812M4D0011	—	80 × 80 × 25 mm	No	98
9RA0812P1G001	9RA0812G1002	9RA0812G1001	9RA0812G1D001	9RA0812P1G001	80 × 80 × 38 mm	Yes	121
9RA0812P1G0011	9RA0812G10021	9RA0812G10011	9RA0812G1D0011	9RA0812P1G0011	80 × 80 × 38 mm	No	121
9RA0812P1H001	9RA0812H1002	9RA0812H1001	9RA0812H1D001	9RA0812P1H001	80 × 80 × 38 mm	Yes	121
9RA0812P1H0011	9RA0812H10021	9RA0812H10011	9RA0812H1D0011	9RA0812P1H0011	80 × 80 × 38 mm	No	121
9RA0812P1K001	9RA0812K1002	9RA0812K1001	9RA0812K1D001	9RA0812P1K001	80 × 80 × 38 mm	Yes	121
9RA0812P1K0011	9RA0812K10021	9RA0812K10011	9RA0812K1D0011	9RA0812P1K0011	80 × 80 × 38 mm	No	121
9RA0812P4G001	9RA0812G4002	9RA0812G4001	9RA0812G4D001	9RA0812P4G001	80 × 80 × 25 mm	Yes	98
9RA0812P4G0011	9RA0812G40021	9RA0812G40011	9RA0812G4D0011	9RA0812P4G0011	80 × 80 × 25 mm	No	98
9RA0812S4001	9RA0812S4002	9RA0812S4001	9RA0812S4D001	—	80 × 80 × 25 mm	Yes	98
9RA0812S40011	9RA0812S40021	9RA0812S40011	9RA0812S4D0011	—	80 × 80 × 25 mm	No	98
9RA0824G1001	9RA0824G1002	9RA0824G1001	9RA0824G1D001	9RA0824P1G001	80 × 80 × 38 mm	Yes	121
9RA0824G10011	9RA0824G10021	9RA0824G10011	9RA0824G1D0011	9RA0824P1G0011	80 × 80 × 38 mm	No	121
9RA0824G4001	9RA0824G4002	9RA0824G4001	9RA0824G4D001	9RA0824P4G001	80 × 80 × 25 mm	Yes	98
9RA0824G40011	9RA0824G40021	9RA0824G40011	9RA0824G4D0011	9RA0824P4G0011	80 × 80 × 25 mm	No	98
9RA0824H1001	9RA0824H1002	9RA0824H1001	9RA0824H1D001	—	80 × 80 × 38 mm	Yes	121
9RA0824H10011	9RA0824H10021	9RA0824H10011	9RA0824H1D0011	—	80 × 80 × 38 mm	No	121
9RA0824H4001	9RA0824H4002	9RA0824H4001	9RA0824H4D001	—	80 × 80 × 25 mm	Yes	98
9RA0824H40011	9RA0824H40021	9RA0824H40011	9RA0824H4D0011	—	80 × 80 × 25 mm	No	98
9RA0824M4001	9RA0824M4002	9RA0824M4001	9RA0824M4D001	—	80 × 80 × 25 mm	Yes	98

Note 1: For compliance with standards, see individual product pages. Please contact your point of sale regarding low-speed sensors.
Note 2: The ⟫ mark indicates Short Lead Time Service applicable models. See p. 664 for details.

Models listed in product pages	List of models (The models listed on the right of the models listed in product pages are option models. Option models may not necessarily comply with the same standards as the models listed in product pages. Contact us for details of the "—" models.)				Frame size	Rib	page
	Without sensor	With pulse sensor	With lock sensor	With PWM control and pulse sensor			
9RA0824M40011	9RA0824M40021	⊗ 9RA0824M40011	⊗ 9RA0824M4D0011	—	80 × 80 × 25 mm	No	98
9RA0824P1G001	9RA0824G1002	⊗ 9RA0824G1001	⊗ 9RA0824G1D001	⊗ 9RA0824P1G001	80 × 80 × 38 mm	Yes	121
9RA0824P1G0011	9RA0824G10021	⊗ 9RA0824G10011	⊗ 9RA0824G1D0011	⊗ 9RA0824P1G0011	80 × 80 × 38 mm	No	121
9RA0824P4G001	9RA0824G4002	⊗ 9RA0824G4001	⊗ 9RA0824G4D001	⊗ 9RA0824P4G001	80 × 80 × 25 mm	Yes	98
9RA0824P4G0011	9RA0824G40021	⊗ 9RA0824G40011	⊗ 9RA0824G4D0011	⊗ 9RA0824P4G0011	80 × 80 × 25 mm	No	98
9RA0824S4001	9RA0824S4002	⊗ 9RA0824S4001	⊗ 9RA0824S4D001	—	80 × 80 × 25 mm	Yes	98
9RA0824S40011	9RA0824S40021	⊗ 9RA0824S40011	⊗ 9RA0824S4D0011	—	80 × 80 × 25 mm	No	98
9RA0848G1001	9RA0848G1002	⊗ 9RA0848G1001	⊗ 9RA0848G1D001	⊗ 9RA0848P1G001	80 × 80 × 38 mm	Yes	121
9RA0848G10011	9RA0848G10021	⊗ 9RA0848G10011	⊗ 9RA0848G1D0011	⊗ 9RA0848P1G0011	80 × 80 × 38 mm	No	121
9RA0848G4001	9RA0848G4002	⊗ 9RA0848G4001	⊗ 9RA0848G4D001	⊗ 9RA0848P4G001	80 × 80 × 25 mm	Yes	98
9RA0848G40011	9RA0848G40021	⊗ 9RA0848G40011	⊗ 9RA0848G4D0011	⊗ 9RA0848P4G0011	80 × 80 × 25 mm	No	98
9RA0848H1001	9RA0848H1002	⊗ 9RA0848H1001	⊗ 9RA0848H1D001	—	80 × 80 × 38 mm	Yes	121
9RA0848H10011	9RA0848H10021	⊗ 9RA0848H10011	⊗ 9RA0848H1D0011	—	80 × 80 × 38 mm	No	121
9RA0848P1G001	9RA0848G1002	⊗ 9RA0848G1001	⊗ 9RA0848G1D001	⊗ 9RA0848P1G001	80 × 80 × 38 mm	Yes	121
9RA0848P1G0011	9RA0848G10021	⊗ 9RA0848G10011	⊗ 9RA0848G1D0011	⊗ 9RA0848P1G0011	80 × 80 × 38 mm	No	121
9RA0848P4G001	9RA0848G4002	⊗ 9RA0848G4001	⊗ 9RA0848G4D001	⊗ 9RA0848P4G001	80 × 80 × 25 mm	Yes	98
9RA0848P4G0011	9RA0848G40021	⊗ 9RA0848G40011	⊗ 9RA0848G4D0011	⊗ 9RA0848P4G0011	80 × 80 × 25 mm	No	98
9RA0848S4001	9RA0848S4002	⊗ 9RA0848S4001	⊗ 9RA0848S4D001	—	80 × 80 × 25 mm	Yes	98
9RA0848S40011	9RA0848S40021	⊗ 9RA0848S40011	⊗ 9RA0848S4D0011	—	80 × 80 × 25 mm	No	98
9RA0912F4001	9RA0912F40021	⊗ 9RA0912F4001	⊗ 9RA0912F4D001	—	92 × 92 × 25 mm	Yes	131
9RA0912F40011	9RA0912F40021	⊗ 9RA0912F40011	⊗ 9RA0912F4D0011	—	92 × 92 × 25 mm	No	131
9RA0912G1001	9RA0912G1002	9RA0912G1001	⊗ 9RA0912G1D001	⊗ 9RA0912P1G001	92 × 92 × 38 mm	Yes	149
9RA0912G10011	9RA0912G10021	9RA0912G10011	⊗ 9RA0912G1D0011	⊗ 9RA0912P1G0011	92 × 92 × 38 mm	No	149
9RA0912G4001	9RA0912G4002	⊗ 9RA0912G4001	⊗ 9RA0912G4D001	⊗ 9RA0912P4G001	92 × 92 × 25 mm	Yes	131
9RA0912G40011	9RA0912G40021	⊗ 9RA0912G40011	⊗ 9RA0912G4D0011	⊗ 9RA0912P4G0011	92 × 92 × 25 mm	No	131
9RA0912H1001	9RA0912H1002	⊗ 9RA0912H1001	⊗ 9RA0912H1D001	—	92 × 92 × 38 mm	Yes	149
9RA0912H10011	9RA0912H10021	9RA0912H10011	⊗ 9RA0912H1D0011	—	92 × 92 × 38 mm	No	149
9RA0912H4001	9RA0912H4002	⊗ 9RA0912H4001	⊗ 9RA0912H4D001	—	92 × 92 × 25 mm	Yes	131
9RA0912H40011	9RA0912H40021	⊗ 9RA0912H40011	⊗ 9RA0912H4D0011	—	92 × 92 × 25 mm	No	131
9RA0912J1001	9RA0912J1002	9RA0912J1001	⊗ 9RA0912J1D001	⊗ 9RA0912P1J001	92 × 92 × 38 mm	Yes	149
9RA0912J10011	9RA0912J10021	9RA0912J10011	⊗ 9RA0912J1D0011	⊗ 9RA0912P1J0011	92 × 92 × 38 mm	No	149
9RA0912M4001	9RA0912M4002	⊗ 9RA0912M4001	⊗ 9RA0912M4D001	—	92 × 92 × 25 mm	Yes	131
9RA0912M40011	9RA0912M40021	⊗ 9RA0912M40011	⊗ 9RA0912M4D0011	—	92 × 92 × 25 mm	No	131
9RA0912P1G001	9RA0912G1002	9RA0912G1001	⊗ 9RA0912G1D001	⊗ 9RA0912P1G001	92 × 92 × 38 mm	Yes	149
9RA0912P1G0011	9RA0912G10021	9RA0912G10011	⊗ 9RA0912G1D0011	⊗ 9RA0912P1G0011	92 × 92 × 38 mm	No	149
9RA0912P1J001	9RA0912J1002	9RA0912J1001	⊗ 9RA0912J1D001	⊗ 9RA0912P1J001	92 × 92 × 38 mm	Yes	149
9RA0912P1J0011	9RA0912J10021	9RA0912J10011	⊗ 9RA0912J1D0011	⊗ 9RA0912P1J0011	92 × 92 × 38 mm	No	149
9RA0912P4G001	9RA0912G4002	⊗ 9RA0912G4001	⊗ 9RA0912G4D001	⊗ 9RA0912P4G001	92 × 92 × 25 mm	Yes	131
9RA0912P4G0011	9RA0912G40021	⊗ 9RA0912G40011	⊗ 9RA0912G4D0011	⊗ 9RA0912P4G0011	92 × 92 × 25 mm	No	131
9RA0912S4001	9RA0912S4002	⊗ 9RA0912S4001	⊗ 9RA0912S4D001	—	92 × 92 × 25 mm	Yes	131
9RA0912S40011	9RA0912S40021	⊗ 9RA0912S40011	⊗ 9RA0912S4D0011	—	92 × 92 × 25 mm	No	131
9RA0924F4001	9RA0924F4002	⊗ 9RA0924F4001	⊗ 9RA0924F4D001	—	92 × 92 × 25 mm	Yes	131
9RA0924F40011	9RA0924F40021	⊗ 9RA0924F40011	⊗ 9RA0924F4D0011	—	92 × 92 × 25 mm	No	131
9RA0924G1001	9RA0924G1002	9RA0924G1001	⊗ 9RA0924G1D001	⊗ 9RA0924P1G001	92 × 92 × 38 mm	Yes	149
9RA0924G10011	9RA0924G10021	9RA0924G10011	⊗ 9RA0924G1D0011	⊗ 9RA0924P1G0011	92 × 92 × 38 mm	No	149
9RA0924G4001	9RA0924G4002	⊗ 9RA0924G4001	⊗ 9RA0924G4D001	⊗ 9RA0924P4G001	92 × 92 × 25 mm	Yes	131
9RA0924G40011	9RA0924G40021	⊗ 9RA0924G40011	⊗ 9RA0924G4D0011	⊗ 9RA0924P4G0011	92 × 92 × 25 mm	No	131
9RA0924H1001	9RA0924H1002	⊗ 9RA0924H1001	⊗ 9RA0924H1D001	—	92 × 92 × 38 mm	Yes	149
9RA0924H10011	9RA0924H10021	9RA0924H10011	⊗ 9RA0924H1D0011	—	92 × 92 × 38 mm	No	149
9RA0924H4001	9RA0924H4002	⊗ 9RA0924H4001	⊗ 9RA0924H4D001	—	92 × 92 × 25 mm	Yes	131
9RA0924H40011	9RA0924H40021	⊗ 9RA0924H40011	⊗ 9RA0924H4D0011	—	92 × 92 × 25 mm	No	131
9RA0924J1001	9RA0924J1002	9RA0924J1001	⊗ 9RA0924J1D001	⊗ 9RA0924P1J001	92 × 92 × 38 mm	Yes	149
9RA0924J10011	9RA0924J10021	9RA0924J10011	⊗ 9RA0924J1D0011	⊗ 9RA0924P1J0011	92 × 92 × 38 mm	No	149
9RA0924M4001	9RA0924M4002	⊗ 9RA0924M4001	⊗ 9RA0924M4D001	—	92 × 92 × 25 mm	Yes	131
9RA0924M40011	9RA0924M40021	⊗ 9RA0924M40011	⊗ 9RA0924M4D0011	—	92 × 92 × 25 mm	No	131
9RA0924P1G001	9RA0924G1002	9RA0924G1001	⊗ 9RA0924G1D001	⊗ 9RA0924P1G001	92 × 92 × 38 mm	Yes	149
9RA0924P1G0011	9RA0924G10021	9RA0924G10011	⊗ 9RA0924G1D0011	⊗ 9RA0924P1G0011	92 × 92 × 38 mm	No	149

Note 1: For compliance with standards, see individual product pages. Please contact your point of sale regarding low-speed sensors.
Note 2: The ⊗ mark indicates Short Lead Time Service applicable models. See p. 664 for details.

Models listed in product pages	List of models (The models listed on the right of the models listed in product pages are option models. Option models may not necessarily comply with the same standards as the models listed in product pages. Contact us for details of the "—" models.)				Frame size	Rib	page
	Without sensor	With pulse sensor	With lock sensor	With PWM control and pulse sensor			
9RA0924P1J001	9RA0924J1002	9RA0924J1001	9RA0924J1D001	9RA0924P1J001	92 × 92 × 38 mm	Yes	149
9RA0924P1J0011	9RA0924J10021	9RA0924J10011	9RA0924J1D0011	9RA0924P1J0011	92 × 92 × 38 mm	No	149
9RA0924P4G001	9RA0924G4002	9RA0924G4001	9RA0924G4D001	9RA0924P4G001	92 × 92 × 25 mm	Yes	131
9RA0924P4G0011	9RA0924G40021	9RA0924G40011	9RA0924G4D0011	9RA0924P4G0011	92 × 92 × 25 mm	No	131
9RA0924S4001	9RA0924S4002	9RA0924S4001	9RA0924S4D001	—	92 × 92 × 25 mm	Yes	131
9RA0924S40011	9RA0924S40021	9RA0924S40011	9RA0924S4D0011	—	92 × 92 × 25 mm	No	131
9RA0948G1001	9RA0948G1002	9RA0948G1001	9RA0948G1D001	9RA0948P1G001	92 × 92 × 38 mm	Yes	149
9RA0948G10011	9RA0948G10021	9RA0948G10011	9RA0948G1D0011	9RA0948P1G0011	92 × 92 × 38 mm	No	149
9RA0948G4001	9RA0948G4002	9RA0948G4001	9RA0948G4D001	9RA0948P4G001	92 × 92 × 25 mm	Yes	131
9RA0948G40011	9RA0948G40021	9RA0948G40011	9RA0948G4D0011	9RA0948P4G0011	92 × 92 × 25 mm	No	131
9RA0948H1001	9RA0948H1002	9RA0948H1001	9RA0948H1D001	—	92 × 92 × 38 mm	Yes	149
9RA0948H10011	9RA0948H10021	9RA0948H10011	9RA0948H1D0011	—	92 × 92 × 38 mm	No	149
9RA0948H4001	9RA0948H4002	9RA0948H4001	9RA0948H4D001	—	92 × 92 × 25 mm	Yes	131
9RA0948H40011	9RA0948H40021	9RA0948H40011	9RA0948H4D0011	—	92 × 92 × 25 mm	No	131
9RA0948J1001	9RA0948J1002	9RA0948J1001	9RA0948J1D001	9RA0948P1J001	92 × 92 × 38 mm	Yes	149
9RA0948J10011	9RA0948J10021	9RA0948J10011	9RA0948J1D0011	9RA0948P1J0011	92 × 92 × 38 mm	No	149
9RA0948P1G001	9RA0948G1002	9RA0948G1001	9RA0948G1D001	9RA0948P1G001	92 × 92 × 38 mm	Yes	149
9RA0948P1G0011	9RA0948G10021	9RA0948G10011	9RA0948G1D0011	9RA0948P1G0011	92 × 92 × 38 mm	No	149
9RA0948P1J001	9RA0948J1002	9RA0948J1001	9RA0948J1D001	9RA0948P1J001	92 × 92 × 38 mm	Yes	149
9RA0948P1J0011	9RA0948J10021	9RA0948J10011	9RA0948J1D0011	9RA0948P1J0011	92 × 92 × 38 mm	No	149
9RA0948P4G001	9RA0948G4002	9RA0948G4001	9RA0948G4D001	9RA0948P4G001	92 × 92 × 25 mm	Yes	131
9RA0948P4G0011	9RA0948G40021	9RA0948G40011	9RA0948G4D0011	9RA0948P4G0011	92 × 92 × 25 mm	No	131
9RA0948S4001	9RA0948S4002	9RA0948S4001	9RA0948S4D001	—	92 × 92 × 25 mm	Yes	131
9RA0948S40011	9RA0948S40021	9RA0948S40011	9RA0948S4D0011	—	92 × 92 × 25 mm	No	131
9RA1212A4001	9RA1212A4002	9RA1212A4001	9RA1212A4D001	—	120 × 120 × 25 mm	Yes	161
9RA1212A40011	9RA1212A40021	9RA1212A40011	9RA1212A4D0011	—	120 × 120 × 25 mm	No	161
9RA1212E1001	9RA1212E1002	9RA1212E1001	9RA1212E1D001	—	120 × 120 × 38 mm	Yes	175
9RA1212E10011	9RA1212E10021	9RA1212E10011	9RA1212E1D0011	—	120 × 120 × 38 mm	No	175
9RA1212E4001	9RA1212E4002	9RA1212E4001	9RA1212E4D001	9RA1212P4E001	120 × 120 × 25 mm	Yes	161
9RA1212E40011	9RA1212E40021	9RA1212E40011	9RA1212E4D0011	9RA1212P4E0011	120 × 120 × 25 mm	No	161
9RA1212F4001	—	9RA1212F4001	9RA1212F4D001	—	120 × 120 × 25 mm	Yes	161
9RA1212F40011	—	9RA1212F40011	—	—	120 × 120 × 25 mm	No	161
9RA1212G1001	9RA1212G1002	9RA1212G1001	9RA1212G1D001	—	120 × 120 × 38 mm	Yes	175
9RA1212G10011	9RA1212G10021	9RA1212G10011	9RA1212G1D0011	—	120 × 120 × 38 mm	No	175
9RA1212G4001	9RA1212G4002	9RA1212G4001	9RA1212G4D001	9RA1212P4G001	120 × 120 × 25 mm	Yes	161
9RA1212G40011	9RA1212G40021	9RA1212G40011	9RA1212G4D0011	9RA1212P4G0011	120 × 120 × 25 mm	No	161
9RA1212H1001	9RA1212H1002	9RA1212H1001	9RA1212H1D001	9RA1212P4H003	120 × 120 × 38 mm	Yes	175
9RA1212H10011	9RA1212H1002	9RA1212H10011	9RA1212H1D0011	9RA1212P4H0031	120 × 120 × 38 mm	No	175
9RA1212H4001	9RA1212H4002	9RA1212H4001	9RA1212H4D001	—	120 × 120 × 25 mm	Yes	161
9RA1212H40011	9RA1212H40021	9RA1212H40011	9RA1212H4D0011	—	120 × 120 × 25 mm	No	161
9RA1212M4001	9RA1212M4002	9RA1212M4001	9RA1212M4D001	—	120 × 120 × 25 mm	Yes	161
9RA1212M40011	9RA1212M40021	9RA1212M40011	9RA1212M4D0011	—	120 × 120 × 25 mm	No	161
9RA1212P1K001	9RA1212K1002	9RA1212K1001	9RA1212K1D001	9RA1212P1K001	120 × 120 × 38 mm	Yes	175
9RA1212P1K0011	9RA1212K10021	9RA1212K10011	9RA1212K1D0011	9RA1212P1K0011	120 × 120 × 38 mm	No	175
9RA1212P4G001	9RA1212G4002	9RA1212G4001	9RA1212G4D001	9RA1212P4G001	120 × 120 × 25 mm	Yes	161
9RA1212P4G0011	9RA1212G40021	9RA1212G40011	9RA1212G4D0011	9RA1212P4G0011	120 × 120 × 25 mm	No	161
9RA1224A4001	9RA1224A4002	9RA1224A4001	9RA1224A4D001	—	120 × 120 × 25 mm	Yes	161
9RA1224A40011	9RA1224A40021	9RA1224A40011	9RA1224A4D0011	—	120 × 120 × 25 mm	No	161
9RA1224E1001	9RA1224E1002	9RA1224E1001	9RA1224E1D001	—	120 × 120 × 38 mm	Yes	175
9RA1224E10011	9RA1224E10021	9RA1224E10011	9RA1224E1D0011	—	120 × 120 × 38 mm	No	175
9RA1224E4001	9RA1224E4002	9RA1224E4001	9RA1224E4D001	9RA1224P4E001	120 × 120 × 25 mm	Yes	161
9RA1224E40011	9RA1224E40021	9RA1224E40011	9RA1224E4D0011	9RA1224P4E0011	120 × 120 × 25 mm	No	161
9RA1224G1001	9RA1224G1002	9RA1224G1001	9RA1224G1D001	—	120 × 120 × 38 mm	Yes	175
9RA1224G10011	9RA1224G10021	9RA1224G10011	9RA1224G1D0011	—	120 × 120 × 38 mm	No	175
9RA1224G4001	9RA1224G4002	9RA1224G4001	9RA1224G4D001	9RA1224P4G001	120 × 120 × 25 mm	Yes	161
9RA1224G40011	9RA1224G40021	9RA1224G40011	9RA1224G4D0011	9RA1224P4G0011	120 × 120 × 25 mm	No	161
9RA1224H1001	9RA1224H1002	9RA1224H1001	9RA1224H1D001	—	120 × 120 × 38 mm	Yes	175

Note 1: For compliance with standards, see individual product pages. Please contact your point of sale regarding low-speed sensors.
Note 2: The mark indicates Short Lead Time Service applicable models. See p. 664 for details.

Models listed in product pages	List of models (The models listed on the right of the models listed in product pages are option models. Option models may not necessarily comply with the same standards as the models listed in product pages. Contact us for details of the "—" models.)				Frame size	Rib	page
	Without sensor	With pulse sensor	With lock sensor	With PWM control and pulse sensor			
9RA1224H10011	9RA1224H10021	9RA1224H10011	9RA1224H1D0011	—	120 × 120 × 38 mm	No	175
9RA1224H4001	9RA1224H4002	9RA1224H4001	9RA1224H4D001	—	120 × 120 × 25 mm	Yes	161
9RA1224H40011	9RA1224H40021	9RA1224H40011	9RA1224H4D0011	—	120 × 120 × 25 mm	No	161
9RA1224M4001	9RA1224M4002	9RA1224M4001	9RA1224M4D001	—	120 × 120 × 25 mm	Yes	161
9RA1224M40011	9RA1224M40021	9RA1224M40011	9RA1224M4D0011	—	120 × 120 × 25 mm	No	161
9RA1224P1K001	9RA1224K1002	9RA1224K1001	9RA1224K1D001	9RA1224P1K001	120 × 120 × 38 mm	Yes	175
9RA1224P1K0011	9RA1224K10021	9RA1224K10011	9RA1224K1D0011	9RA1224P1K0011	120 × 120 × 38 mm	No	175
9RA1224P4G001	9RA1224G4002	9RA1224G4001	9RA1224G4D001	9RA1224P4G001	120 × 120 × 25 mm	Yes	161
9RA1224P4G0011	9RA1224G40021	9RA1224G40011	9RA1224G4D0011	9RA1224P4G0011	120 × 120 × 25 mm	No	161
9RA1248A4001	9RA1248A4002	9RA1248A4001	9RA1248A4D001	—	120 × 120 × 25 mm	Yes	161
9RA1248A40011	9RA1248A40021	9RA1248A40011	9RA1248A4D0011	—	120 × 120 × 25 mm	No	161
9RA1248E1001	9RA1248E1002	9RA1248E1001	9RA1248E1D001	—	120 × 120 × 38 mm	Yes	175
9RA1248E10011	9RA1248E10021	9RA1248E10011	9RA1248E1D0011	—	120 × 120 × 38 mm	No	175
9RA1248E4001	9RA1248E4002	9RA1248E4001	9RA1248E4D001	—	120 × 120 × 25 mm	Yes	161
9RA1248E40011	9RA1248E40021	9RA1248E40011	9RA1248E4D0011	—	120 × 120 × 25 mm	No	161
9RA1248G1001	9RA1248G1002	9RA1248G1001	9RA1248G1D001	—	120 × 120 × 38 mm	Yes	175
9RA1248G10011	9RA1248G10021	9RA1248G10011	9RA1248G1D0011	—	120 × 120 × 38 mm	No	175
9RA1248G4001	9RA1248G4002	9RA1248G4001	9RA1248G4D001	9RA1248P4G001	120 × 120 × 25 mm	Yes	161
9RA1248G40011	9RA1248G40021	9RA1248G40011	9RA1248G4D0011	9RA1248P4G0011	120 × 120 × 25 mm	No	161
9RA1248H1001	9RA1248H1002	9RA1248H1001	9RA1248H1D001	—	120 × 120 × 38 mm	Yes	175
9RA1248H10011	9RA1248H10021	9RA1248H10011	9RA1248H1D0011	—	120 × 120 × 38 mm	No	175
9RA1248P1K001	9RA1248K1002	9RA1248K1001	9RA1248K1D001	9RA1248P1K001	120 × 120 × 38 mm	Yes	175
9RA1248P1K0011	9RA1248K10021	9RA1248K10011	9RA1248K1D0011	9RA1248P1K0011	120 × 120 × 38 mm	No	175
9RA1248P4G001	9RA1248G4002	9RA1248G4001	9RA1248G4D001	9RA1248P4G001	120 × 120 × 25 mm	Yes	161
9RA1248P4G0011	9RA1248G40021	9RA1248G40011	9RA1248G4D0011	9RA1248P4G0011	120 × 120 × 25 mm	No	161
9RA1412H1001	—	9RA1412H1001	9RA1412H1D001	—	140 × 140 × 38 mm	Yes	183
9RA1412H10011	—	9RA1412H10011	9RA1412H1D0011	—	140 × 140 × 38 mm	No	183
9RA1412M1001	—	9RA1412M1001	9RA1412M1D001	—	140 × 140 × 38 mm	Yes	183
9RA1412M10011	—	9RA1412M10011	9RA1412M1D0011	—	140 × 140 × 38 mm	No	183
9RA1412S1001	—	9RA1412S1001	9RA1412S1D001	—	140 × 140 × 38 mm	Yes	183
9RA1412S10011	—	9RA1412S10011	9RA1412S1D0011	—	140 × 140 × 38 mm	No	183
9RA1412P1G001	—	—	—	9RA1412P1G001	140 × 140 × 38 mm	Yes	183
9RA1412P1G0011	—	—	—	9RA1412P1G0011	140 × 140 × 38 mm	No	183
9RA1424H1001	—	9RA1424H1001	9RA1424H1D001	—	140 × 140 × 38 mm	Yes	183
9RA1424H10011	—	9RA1424H10011	9RA1424H1D0011	—	140 × 140 × 38 mm	No	183
9RA1424M1001	—	9RA1424M1001	9RA1424M1D001	—	140 × 140 × 38 mm	Yes	183
9RA1424M10011	—	9RA1424M10011	9RA1424M1D0011	—	140 × 140 × 38 mm	No	183
9RA1424S1001	—	9RA1424S1001	9RA1424S1D001	—	140 × 140 × 38 mm	Yes	183
9RA1424S10011	—	9RA1424S10011	9RA1424S1D0011	—	140 × 140 × 38 mm	No	183
9RA1424P1G001	—	—	—	9RA1424P1G001	140 × 140 × 38 mm	Yes	183
9RA1424P1G0011	—	—	—	9RA1424P1G0011	140 × 140 × 38 mm	No	183
9RA1448H1001	—	9RA1448H1001	9RA1448H1D001	—	140 × 140 × 38 mm	Yes	183
9RA1448H10011	—	9RA1448H10011	9RA1448H1D0011	—	140 × 140 × 38 mm	No	183
9RA1448M1001	—	9RA1448M1001	9RA1448M1D001	—	140 × 140 × 38 mm	Yes	183
9RA1448M10011	—	9RA1448M10011	9RA1448M1D0011	—	140 × 140 × 38 mm	No	183
9RA1448S1001	—	9RA1448S1001	9RA1448S1D001	—	140 × 140 × 38 mm	Yes	183
9RA1448S10011	—	9RA1448S10011	9RA1448S1D0011	—	140 × 140 × 38 mm	No	183
9RA1448P1G001	—	—	—	9RA1448P1G001	140 × 140 × 38 mm	Yes	183
9RA1448P1G0011	—	—	—	9RA1448P1G0011	140 × 140 × 38 mm	No	183
9RF0912P1H001	—	—	—	9RF0912P1H001	Ø92 × 38 mm	Yes	246
9RF0924P1H001	—	—	—	9RF0924P1H001	Ø92 × 38 mm	Yes	246
9RF1312P3H601	—	—	—	9RF1312P3H601	Ø136 × 28 mm	Yes	252
9RF1324P3H001	—	—	—	9RF1324P3H001	Ø136 × 28 mm	Yes	252
9RFA1312P3G001	—	—	—	9RFA1312P3G001	Ø136 × 28 mm	Yes	249
9RFA1312P3H001	—	—	—	9RFA1312P3H001	Ø136 × 28 mm	Yes	249
9RFA1324P3G001	—	—	—	9RFA1324P3G001	Ø136 × 28 mm	Yes	249
9RFA1324P3H001	—	—	—	9RFA1324P3H001	Ø136 × 28 mm	Yes	249

Note 1: For compliance with standards, see individual product pages. Please contact your point of sale regarding low-speed sensors.
Note 2: The mark indicates Short Lead Time Service applicable models. See p. 664 for details.

Models listed in product pages	List of models (The models listed on the right of the models listed in product pages are option models. Option models may not necessarily comply with the same standards as the models listed in product pages. Contact us for details of the "—" models.)				Frame size	Rib	page
	Without sensor	With pulse sensor	With lock sensor	With PWM control and pulse sensor			
9S0612F401	9S0612F402	9S0612F401	9S0612F4D01	9S0612P4F01	60 × 60 × 25 mm	Yes	74
9S0612F4011	9S0612F4021	9S0612F4011	9S0612F4D011	9S0612P4F011	60 × 60 × 25 mm	No	74
9S0612H401	9S0612H402	9S0612H401	9S0612H4D01	9S0612P4H01	60 × 60 × 25 mm	Yes	74
9S0612H4011	9S0612H4021	9S0612H4011	9S0612H4D011	9S0612P4H011	60 × 60 × 25 mm	No	74
9S0612M401	9S0612M402	9S0612M401	9S0612M4D01	9S0612P4M01	60 × 60 × 25 mm	Yes	74
9S0612M4011	9S0612M4021	9S0612M4011	9S0612M4D011	—	60 × 60 × 25 mm	No	74
9S0612S401	9S0612S402	9S0612S401	9S0612S4D01	9S0612P4S01	60 × 60 × 25 mm	Yes	74
9S0612S4011	—	9S0612S4011	—	9S0612P4S011	60 × 60 × 25 mm	No	74
9S0812F401	9S0812F402	9S0812F401	9S0812F4D01	9S0812P4F01	80 × 80 × 25 mm	Yes	102
9S0812F4011	9S0812F4021	9S0812F4011	9S0812F4D011	9S0812P4F011	80 × 80 × 25 mm	No	102
9S0812H401	9S0812H402	9S0812H401	9S0812H4D01	—	80 × 80 × 25 mm	Yes	102
9S0812H4011	—	9S0812H4011	9S0812H4D011	—	80 × 80 × 25 mm	No	102
9S0812L401	9S0812L402	9S0812L401	9S0812L4D01	—	80 × 80 × 25 mm	Yes	102
9S0812L4011	9S0812L4021	9S0812L4011	9S0812L4D011	—	80 × 80 × 25 mm	No	102
9S0812M401	9S0812M402	9S0812M401	9S0812M4D01	9S0812P4M01	80 × 80 × 25 mm	Yes	102
9S0812M4011	9S0812M4021	9S0812M4011	9S0812M4D011	9S0812P4M011	80 × 80 × 25 mm	No	102
9S0824L401	9S0824L402	9S0824L401	9S0824L4D01	—	80 × 80 × 25 mm	Yes	102
9S0824L4011	9S0824L4021	9S0824L4011	9S0824L4D011	—	80 × 80 × 25 mm	No	102
9S0824M401	9S0824M402	9S0824M401	9S0824M4D01	—	80 × 80 × 25 mm	Yes	102
9S0824M4011	9S0824M4021	9S0824M4011	9S0824M4D011	—	80 × 80 × 25 mm	No	102
9S0912F401	9S0912F402	9S0912F401	9S0912F4D01	9S0912P4F01	92 × 92 × 25 mm	Yes	135
9S0912F4011	9S0912F4021	9S0912F4011	9S0912F4D011	9S0912P4F011	92 × 92 × 25 mm	No	135
9S0912L401	9S0912L402	9S0912L401	9S0912L4D01	—	92 × 92 × 25 mm	Yes	135
9S0912L4011	9S0912L4021	9S0912L4011	9S0912L4D011	—	92 × 92 × 25 mm	No	135
9S0912M401	9S0912M402	9S0912M401	9S0912M4D01	9S0912P4M01	92 × 92 × 25 mm	Yes	135
9S0912M4011	9S0912M4021	9S0912M4011	9S0912M4D011	9S0912P4M011	92 × 92 × 25 mm	No	135
9S0924F401	9S0924F402	9S0924F401	9S0924F4D01	—	92 × 92 × 25 mm	Yes	135
9S0924F4011	9S0924F4021	9S0924F4011	—	—	92 × 92 × 25 mm	No	135
9S0924L401	9S0924L402	9S0924L401	9S0924L4D01	—	92 × 92 × 25 mm	Yes	135
9S0924L4011	9S0924L4021	9S0924L4011	—	—	92 × 92 × 25 mm	No	135
9S0924M401	9S0924M402	9S0924M401	9S0924M4D01	—	92 × 92 × 25 mm	Yes	135
9S0924M4011	9S0924M4021	9S0924M4011	—	—	92 × 92 × 25 mm	No	135
9S1212F401	9S1212F402	9S1212F401	9S1212F4D01	9S1212P4F01	120 × 120 × 25 mm	Yes	165
9S1212F4011	9S1212F4021	9S1212F4011	9S1212F4D011	9S1212P4F011	120 × 120 × 25 mm	No	165
9S1212H401	9S1212H402	9S1212H401	9S1212H4D01	9S1212P4H01	120 × 120 × 25 mm	Yes	165
9S1212H4011	9S1212H4021	9S1212H4011	—	9S1212P4H011	120 × 120 × 25 mm	No	165
9S1212L401	9S1212L402	9S1212L401	9S1212L4D01	—	120 × 120 × 25 mm	Yes	165
9S1212L4011	9S1212L4021	9S1212L4011	9S1212L4D011	9S1212P4L011	120 × 120 × 25 mm	No	165
9S1212M401	9S1212M402	9S1212M401	9S1212M4D01	9S1212P4M01	120 × 120 × 25 mm	Yes	165
9S1212M4011	9S1212M4021	9S1212M4011	9S1212M4D011	9S1212P4M011	120 × 120 × 25 mm	No	165
9S1224M401	9S1224M402	9S1224M401	9S1224M4D01	—	120 × 120 × 25 mm	Yes	165
9S1224M4011	9S1224M4021	9S1224M4011	9S1224M4D011	—	120 × 120 × 25 mm	No	165
9SG5724P5H61	9SG5724H562	—	—	9SG5724P5H61	Ø172 × 150 × 51 mm	No	194
9SG5748P5G01	—	—	—	9SG5748P5G01	Ø172 × 150 × 51 mm	No	194
9SG5748P5H01	—	9SG5748H501	—	9SG5748P5H01	Ø172 × 150 × 51 mm	No	194
9SX1212P1K001	—	—	—	9SX1212P1K001	120 × 120 × 38 mm	No	170
9TD12P6G001	—	—	—	9TD12P6G001	Ø70 × 20 mm	No	438
9TG24P0G01	9TG24G002	9TG24G001	—	9TG24P0G01	Ø175 × 69 mm	—	450
9TG24P0S01	9TG24S002	9TG24S001	—	9TG24P0S01	Ø175 × 69 mm	—	450
9TG48P0G01	—	—	—	9TG48P0G01	Ø175 × 69 mm	—	450
9TGA24P0H001	—	—	—	9TGA24P0H001	Ø175 × 69 mm	—	447
9TGA48P0G001	—	—	—	9TGA48P0G001	Ø175 × 69 mm	—	447
9TJ24P0H61	—	—	—	9TJ24P0H61	Ø133 × 91 mm	—	443
9TJ48P0H01	—	—	—	9TJ48P0H01	Ø133 × 91 mm	—	443
9TM24P4H01	—	—	—	9TM24P4H01	Ø100 × 25 mm	—	440
9TM48P4H01	9TM48H402	—	—	9TM48P4H01	Ø100 × 25 mm	—	440
9TN24P1H01	9TN24H102	—	—	9TN24P1H01	Ø150 × 35 mm	—	445

Note 1: For compliance with standards, see individual product pages. Please contact your point of sale regarding low-speed sensors.
Note 2: The mark indicates Short Lead Time Service applicable models. See p. 664 for details.

Models listed in product pages	List of models (The models listed on the right of the models listed in product pages are option models. Option models may not necessarily comply with the same standards as the models listed in product pages. Contact us for details of the "—" models.)				Frame size	Rib	page
	Without sensor	With pulse sensor	With lock sensor	With PWM control and pulse sensor			
9TN48P1H01	—	—	—	9TN48P1H01	Ø150 × 35 mm	—	445
9TP24P0H001	—	—	—	9TP24P0H001	Ø221 × 71 mm	—	453
9TP48P0G001	9TP48G0002	—	—	9TP48P0G001	Ø221 × 71 mm	—	453
9TP48P0H001	—	—	—	9TP48P0H001	Ø221 × 71 mm	—	453
9TS48P0G001	—	—	—	9TS48P0G001	Ø225 × 99 mm	—	456
9TS48P0H001	—	—	—	9TS48P0H001	Ø225 × 99 mm	—	456
9W1BM12P2H001	—	—	—	9W1BM12P2H001	97 × 33 mm	—	342
9W1BM12P2M001	—	—	—	9W1BM12P2M001	97 × 33 mm	—	342
9W1BM24P2H001	—	—	9W1BM24H2D001	9W1BM24P2H001	97 × 33 mm	—	342
9W1BM24P2M001	—	—	—	9W1BM24P2M001	97 × 33 mm	—	342
9W1TG48P0H61	—	—	—	9W1TG48P0H61	Ø175 × 69 mm	—	327
9W1TG48P0S61	—	—	—	9W1TG48P0S61	Ø175 × 69 mm	—	327
9W2TGA48P0G001	—	—	—	9W2TGA48P0G001	Ø175 × 69 mm	—	325
9W2TJ24P0H001	—	—	—	9W2TJ24P0H001	Ø133 × 91 mm	—	319
9W2TJ48P0H001	—	—	—	9W2TJ48P0H001	Ø133 × 91 mm	—	319
9W2TM24P4G001	—	9W2TM24G4001	—	9W2TM24P4G001	Ø100 × 25 mm	—	316
9W2TM24P4H001	—	9W2TM24H4001	—	9W2TM24P4H001	Ø100 × 25 mm	—	316
9W2TM48P4G001	—	9W2TM48G4001	—	9W2TM48P4G001	Ø100 × 25 mm	—	316
9W2TM48P4H001	—	9W2TM48H4001	—	9W2TM48P4H001	Ø100 × 25 mm	—	316
9W2TN24P1H001	—	—	—	9W2TN24P1H001	Ø150 × 35 mm	—	322
9W2TN48P1H001	—	—	—	9W2TN48P1H001	Ø150 × 35 mm	—	322
9W2TP24P0H001	—	—	—	9W2TP24P0H001	Ø221 × 71 mm	—	330
9W2TP48P0S001	—	—	—	9W2TP48P0S001	Ø221 × 71 mm	—	330
9W2TS48P0S001	—	—	—	9W2TS48P0S001	Ø225 × 99 mm	—	333
9WF0424H701	9WF0424H702	9WF0424H701	9WF0424H7D01	—	40 × 40 × 15 mm	Yes	346
9WF0624H401	9WF0624H402	9WF0624H401	9WF0624H4D01	—	60 × 60 × 25 mm	Yes	354
9WF0624H701	9WF0624H702	9WF0624H701	9WF0624H7D01	—	60 × 60 × 15 mm	Yes	350
9WF0824S401	9WF0824S402	9WF0824S401	9WF0824S4D01	—	80 × 80 × 25 mm	Yes	358
9WF1224H101	9WF1224H102	9WF1224H101	9WF1224H1D01	—	120 × 120 × 38 mm	Yes	364
9WFA0424G6001	9WFA0424G6002	9WFA0424G6001	9WFA0424G6D001	9WFA0424P6G001	40 × 40 × 20 mm	Yes	348
9WFA0624G6001	9WFA0624G6002	9WFA0624G6001	9WFA0624G6D001	9WFA0624P6G001	60 × 60 × 20 mm	Yes	352
9WFA0824G6001	9WFA0824G6002	9WFA0824G6001	9WFA0824G6D001	9WFA0824P6G001	80 × 80 × 20 mm	Yes	356
9WFA0924G2001	9WFA0924G2002	9WFA0924G2001	9WFA0924G2D001	9WFA0924P2G001	92 × 92 × 32 mm	Yes	362
9WFA0924G4001	—	9WFA0924G4001	—	9WFA0924P4G001	92 × 92 × 25 mm	Yes	360
9WFA0924G40011	—	9WFA0924G40011	—	9WFA0924P4G0011	92 × 92 × 25 mm	No	360
9WFA0924H4001	—	9WFA0924H4001	—	9WFA0924P4H001	92 × 92 × 25 mm	Yes	360
9WFA0924H40011	—	9WFA0924H40011	—	9WFA0924P4H0011	92 × 92 × 25 mm	No	360
9WG1212E101-E	9WG1212E102-E	9WG1212E101-E	9WG1212E1D01-E	—	120 × 120 × 38 mm	No	297
9WG1212F101-E	9WG1212F102-E	9WG1212F101-E	9WG1212F1D01-E	—	120 × 120 × 38 mm	No	297
9WG1212G101-E	9WG1212G102-E	9WG1212G101-E	9WG1212G1D01-E	—	120 × 120 × 38 mm	No	297
9WG1212H101-E	9WG1212H102-E	9WG1212H101-E	9WG1212H1D01-E	—	120 × 120 × 38 mm	No	297
9WG1212M101-E	9WG1212M102-E	9WG1212M101-E	9WG1212M1D01-E	—	120 × 120 × 38 mm	No	297
9WG1224E101-E	9WG1224E102-E	9WG1224E101-E	9WG1224E1D01-E	—	120 × 120 × 38 mm	No	297
9WG1224F101-E	9WG1224F102-E	9WG1224F101-E	9WG1224F1D01-E	—	120 × 120 × 38 mm	No	297
9WG1224G101-E	9WG1224G102-E	9WG1224G101-E	9WG1224G1D01-E	—	120 × 120 × 38 mm	No	297
9WG1224H101-E	9WG1224H102-E	9WG1224H101-E	9WG1224H1D01-E	—	120 × 120 × 38 mm	No	297
9WG1224M101-E	9WG1224M102-E	9WG1224M101-E	9WG1224M1D01-E	—	120 × 120 × 38 mm	No	297
9WG1248E101-E	9WG1248E102-E	9WG1248E101-E	9WG1248E1D01-E	—	120 × 120 × 38 mm	No	297
9WG1248F101-E	9WG1248F102-E	9WG1248F101-E	9WG1248F1D01-E	—	120 × 120 × 38 mm	No	297
9WG1248G101-E	9WG1248G102-E	9WG1248G101-E	9WG1248G1D01-E	—	120 × 120 × 38 mm	No	297
9WG1248H101-E	9WG1248H102-E	9WG1248H101-E	9WG1248H1D01-E	—	120 × 120 × 38 mm	No	297
9WG1248M101-E	9WG1248M102-E	9WG1248M101-E	9WG1248M1D01-E	—	120 × 120 × 38 mm	No	297
9WG5748P5G001	9WG5748G5002	—	—	9WG5748P5G001	Ø172 × 150 × 51 mm	No	313
9WG5748P5H001	9WG5748H5002	9WG5748H5001	9WG5748H5D001	9WG5748P5H001	Ø172 × 150 × 51 mm	No	313
9WL0412P3G001	9WL0412G3002	9WL0412G3001	9WL0412G3D001	9WL0412P3G001	40 × 40 × 28 mm	No	264
9WL0412P3J001	9WL0412J3002	9WL0412J3001	—	9WL0412P3J001	40 × 40 × 28 mm	No	264
9WL0424P3G001	9WL0424G3002	9WL0424G3001	—	9WL0424P3G001	40 × 40 × 28 mm	No	264

Note 1: For compliance with standards, see individual product pages. Please contact your point of sale regarding low-speed sensors.
Note 2: The mark indicates Short Lead Time Service applicable models. See p. 664 for details.

Models listed in product pages	List of models (The models listed on the right of the models listed in product pages are option models. Option models may not necessarily comply with the same standards as the models listed in product pages. Contact us for details of the "—" models.)				Frame size	Rib	page
	Without sensor	With pulse sensor	With lock sensor	With PWM control and pulse sensor			
9WL0424P3J001	9WL0424J3002	9WL0424J3001	—	9WL0424P3J001	40 × 40 × 28 mm	No	264
9WL0612P4H001	9WL0612H4002	—	9WL0612H4D001	9WL0612P4H001	60 × 60 × 25 mm	No	270
9WL0612P4J001	9WL0612J4002	—	9WL0612J4D001	9WL0612P4J001	60 × 60 × 25 mm	No	270
9WL0612P4S001	9WL0612S4002	—	9WL0612S4D001	9WL0612P4S001	60 × 60 × 25 mm	No	270
9WL0624P4H001	—	9WL0624H4001	—	9WL0624P4H001	60 × 60 × 25 mm	No	270
9WL0624P4J001	—	—	9WL0624J4D001	9WL0624P4J001	60 × 60 × 25 mm	No	270
9WL0624P4S001	9WL0624S4002	9WL0624S4001	—	9WL0624P4S001	60 × 60 × 25 mm	No	270
9WL0812L4001	9WL0812L4002	9WL0812L4001	—	—	80 × 80 × 25 mm	No	276
9WL0812P4G001	—	—	9WL0812G4D001	9WL0812P4G001	80 × 80 × 25 mm	No	276
9WL0812P4H001	9WL0812H4002	9WL0812H4001	9WL0812H4D001	9WL0812P4H001	80 × 80 × 25 mm	No	276
9WL0812P4J001	—	—	—	9WL0812P4J001	80 × 80 × 25 mm	No	276
9WL0824F4001	9WL0824F4002	9WL0824F4001	—	—	80 × 80 × 25 mm	No	276
9WL0824L4001	9WL0824L4002	9WL0824L4001	—	—	80 × 80 × 25 mm	No	276
9WL0824P4G001	—	—	—	9WL0824P4G001	80 × 80 × 25 mm	No	276
9WL0824P4H001	9WL0824H4002	9WL0824H4001	9WL0824H4D001	9WL0824P4H001	80 × 80 × 25 mm	No	276
9WL0824P4J001	9WL0824J4002	—	—	9WL0824P4J001	80 × 80 × 25 mm	No	276
9WL0912M4001	9WL0912M4002	9WL0912M4001	—	—	92 × 92 × 25 mm	No	285
9WL0912P1F001	—	—	—	9WL0912P1F001	92 × 92 × 38 mm	No	289
9WL0912P1H001	—	—	—	9WL0912P1H001	92 × 92 × 38 mm	No	289
9WL0912P4G001	—	—	—	9WL0912P4G001	92 × 92 × 25 mm	No	285
9WL0912P4H001	9WL0912H4002	9WL0912H4001	9WL0912H4D001	9WL0912P4H001	92 × 92 × 25 mm	No	285
9WL0912P4J001	9WL0912J4002	—	—	9WL0912P4J001	92 × 92 × 25 mm	No	285
9WL0912P4S001	—	—	—	9WL0912P4S001	92 × 92 × 25 mm	No	285
9WL0924F4001	9WL0924F4002	9WL0924F4001	—	—	92 × 92 × 25 mm	No	285
9WL0924M4001	9WL0924M4002	9WL0924M4001	9WL0924M4D001	—	92 × 92 × 25 mm	No	285
9WL0924P1F001	9WL0924F1002	—	—	9WL0924P1F001	92 × 92 × 38 mm	No	289
9WL0924P1H001	—	—	9WL0924H1D001	9WL0924P1H001	92 × 92 × 38 mm	No	289
9WL0924P4H001	9WL0924H4002	9WL0924H4001	9WL0924H4D001	9WL0924P4H001	92 × 92 × 25 mm	No	285
9WL0924P4J001	—	—	9WL0924J4D001	9WL0924P4J001	92 × 92 × 25 mm	No	285
9WL0924P4S001	—	—	—	9WL0924P4S001	92 × 92 × 25 mm	No	285
9WL0948P1F601	—	—	—	9WL0948P1F601	92 × 92 × 38 mm	No	289
9WL0948P1H601	—	—	—	9WL0948P1H601	92 × 92 × 38 mm	No	289
9WL1412P1A001	—	—	—	9WL1412P1A001	140 × 140 × 38 mm	No	303
9WL1412P1H001	—	—	—	9WL1412P1H001	140 × 140 × 38 mm	No	303
9WL1412P1M001	9WL1412M1002	9WL1412M1001	9WL1412M1D001	9WL1412P1M001	140 × 140 × 38 mm	No	303
9WL1412A5001	9WL1412A5002	9WL1412A5001	9WL1412A5D001	—	140 × 140 × 51 mm	No	308
9WL1412H5001	9WL1412H5002	9WL1412H5001	9WL1412H5D001	—	140 × 140 × 51 mm	No	308
9WL1412M5001	9WL1412M5002	9WL1412M5001	9WL1412M5D001	—	140 × 140 × 51 mm	No	308
9WL1412P5G001	—	—	9WL1412G5D001	9WL1412P5G001	140 × 140 × 51 mm	No	308
9WL1412P5S001	—	—	—	9WL1412P5S001	140 × 140 × 51 mm	No	308
9WL1424P1A001	—	—	—	9WL1424P1A001	140 × 140 × 38 mm	No	303
9WL1424P1H001	—	—	—	9WL1424P1H001	140 × 140 × 38 mm	No	303
9WL1424P1M001	9WL1424M1002	9WL1424M1001	9WL1424M1D001	9WL1424P1M001	140 × 140 × 38 mm	No	303
9WL1424A5001	9WL1424A5002	9WL1424A5001	9WL1424A5D001	—	140 × 140 × 51 mm	No	308
9WL1424H5001	9WL1424H5002	9WL1424H5001	9WL1424H5D001	—	140 × 140 × 51 mm	No	308
9WL1424M5001	9WL1424M5002	9WL1424M5001	9WL1424M5D001	—	140 × 140 × 51 mm	No	308
9WL1424P5G001	—	9WL1424G5001	9WL1424G5D001	9WL1424P5G001	140 × 140 × 51 mm	No	308
9WL1424P5S001	—	—	—	9WL1424P5S001	140 × 140 × 51 mm	No	308
9WL1448A5001	9WL1448A5002	9WL1448A5001	9WL1448A5D001	—	140 × 140 × 51 mm	No	308
9WL1448H5001	9WL1448H5002	9WL1448H5001	9WL1448H5D001	—	140 × 140 × 51 mm	No	308
9WL1448L1001	9WL1448L1002	9WL1448L1001	9WL1448L1D001	—	140 × 140 × 38 mm	No	303
9WL1448M5001	9WL1448M5002	9WL1448M5001	9WL1448M5D001	—	140 × 140 × 51 mm	No	308
9WL1448P1A001	—	—	—	9WL1448P1A001	140 × 140 × 38 mm	No	303
9WL1448P1H001	—	—	—	9WL1448P1H001	140 × 140 × 38 mm	No	303
9WL1448P1M001	9WL1448M1002	9WL1448M1001	9WL1448M1D001	9WL1448P1M001	140 × 140 × 38 mm	No	303
9WL1448P5G001	—	—	—	9WL1448P5G001	140 × 140 × 51 mm	No	308
9WL1448P5S001	—	—	—	9WL1448P5S001	140 × 140 × 51 mm	No	308

Note 1: For compliance with standards, see individual product pages. Please contact your point of sale regarding low-speed sensors.
Note 2: The » mark indicates Short Lead Time Service applicable models. See p. 664 for details.

Models listed in product pages	List of models (The models listed on the right of the models listed in product pages are option models. Option models may not necessarily comply with the same standards as the models listed in product pages. Contact us for details of the "—" models.)				Frame size	Rib	page
	Without sensor	With pulse sensor	With lock sensor	With PWM control and pulse sensor			
9WP0412F6001	9WP0412F6002	9WP0412F6001	9WP0412F6D001	—	40 × 40 × 20 mm	Yes	259
9WP0412H6001	9WP0412H6002	9WP0412H6001	—	—	40 × 40 × 20 mm	Yes	259
9WP1212H101	9WP1212H102	9WP1212H101	9WP1212H1D01	—	120 × 120 × 38 mm	Yes	300
9WP1212H1011	9WP1212H1021	9WP1212H1011	9WP1212H1D011	—	120 × 120 × 38 mm	No	300
9WP1212L101	9WP1212L102	9WP1212L101	—	—	120 × 120 × 38 mm	Yes	300
9WP1212L1011	—	9WP1212L1011	—	—	120 × 120 × 38 mm	No	300
9WP1212M101	9WP1212M102	9WP1212M101	—	—	120 × 120 × 38 mm	Yes	300
9WP1212M1011	9WP1212M1021	9WP1212M1011	—	—	120 × 120 × 38 mm	No	300
9WP1224H101	9WP1224H102	9WP1224H101	9WP1224H1D01	—	120 × 120 × 38 mm	Yes	300
9WP1224H1011	9WP1224H1021	9WP1224H1011	9WP1224H1D011	—	120 × 120 × 38 mm	No	300
9WP1224M101	9WP1224M102	9WP1224M101	—	—	120 × 120 × 38 mm	Yes	300
9WP1224M1011	9WP1224M1021	9WP1224M1011	—	—	120 × 120 × 38 mm	No	300
9WP1248H101	9WP1248H102	9WP1248H101	9WP1248H1D01	—	120 × 120 × 38 mm	Yes	300
9WP1248H1011	9WP1248H1021	9WP1248H1011	9WP1248H1D011	—	120 × 120 × 38 mm	No	300
9WP1248M101	9WP1248M102	9WP1248M101	9WP1248M1D01	—	120 × 120 × 38 mm	Yes	300
9WP1248M1011	9WP1248M1021	9WP1248M1011	9WP1248M1D011	—	120 × 120 × 38 mm	No	300
9WPA0412H3001	9WPA0412H3002	9WPA0412H3001	—	—	40 × 40 × 28 mm	Yes	261
9WPA0412H30011	9WPA0412H30021	9WPA0412H30011	—	—	40 × 40 × 28 mm	No	261
9WPA0412H6001	9WPA0412H6002	9WPA0412H6001	—	—	40 × 40 × 20 mm	Yes	256
9WPA0412P3G001	9WPA0412G3002	9WPA0412G3001	—	9WPA0412P3G001	40 × 40 × 28 mm	Yes	261
9WPA0412P3G0011	—	—	—	9WPA0412P3G0011	40 × 40 × 28 mm	No	261
9WPA0412P6G001	—	—	—	9WPA0412P6G001	40 × 40 × 20 mm	Yes	256
9WPA0424H3001	9WPA0424H3002	9WPA0424H3001	—	—	40 × 40 × 28 mm	Yes	261
9WPA0424H30011	9WPA0424H30021	9WPA0424H30011	—	—	40 × 40 × 28 mm	No	261
9WPA0424H6001	9WPA0424H6002	9WPA0424H6001	—	—	40 × 40 × 20 mm	Yes	256
9WPA0424P3G001	—	—	—	9WPA0424P3G001	40 × 40 × 28 mm	Yes	261
9WPA0424P3G0011	—	—	—	9WPA0424P3G0011	40 × 40 × 28 mm	No	261
9WPA0424P6G001	—	—	—	9WPA0424P6G001	40 × 40 × 20 mm	Yes	256
9WPA0612M4001	9WPA0612M4002	9WPA0612M4001	—	—	60 × 60 × 25 mm	Yes	267
9WPA0612M40011	9WPA0612M40021	9WPA0612M40011	—	—	60 × 60 × 25 mm	No	267
9WPA0612P4G001	9WPA0612G4002	9WPA0612G4001	9WPA0612G4D001	9WPA0612P4G001	60 × 60 × 25 mm	Yes	267
9WPA0612P4G0011	—	—	—	9WPA0612P4G0011	60 × 60 × 25 mm	No	267
9WPA0612P4H001	9WPA0612H4002	9WPA0612H4001	—	9WPA0612P4H001	60 × 60 × 25 mm	Yes	267
9WPA0612P4H0011	—	9WPA0612H40011	—	9WPA0612P4H0011	60 × 60 × 25 mm	No	267
9WPA0624M4001	9WPA0624M4002	9WPA0624M4001	9WPA0624M4D001	—	60 × 60 × 25 mm	Yes	267
9WPA0624M40011	9WPA0624M40021	9WPA0624M40011	9WPA0624M4D0011	—	60 × 60 × 25 mm	No	267
9WPA0624P4G001	9WPA0624G4002	9WPA0624G4001	9WPA0624G4D001	9WPA0624P4G001	60 × 60 × 25 mm	Yes	267
9WPA0624P4G0011	—	—	—	9WPA0624P4G0011	60 × 60 × 25 mm	No	267
9WPA0624S4001	9WPA0624S4002	9WPA0624S4001	—	—	60 × 60 × 25 mm	Yes	267
9WPA0624S40011	—	9WPA0624S40011	—	—	60 × 60 × 25 mm	No	267
9WPA0812P4G001	9WPA0812G4002	9WPA0812G4001	9WPA0812G4D001	9WPA0812P4G001	80 × 80 × 25 mm	Yes	273
9WPA0812P4G0011	—	—	—	9WPA0812P4G0011	80 × 80 × 25 mm	No	273
9WPA0812P4S001	9WPA0812S4002	9WPA0812S4001	—	9WPA0812P4S001	80 × 80 × 25 mm	Yes	273
9WPA0812P4S0011	9WPA0812S40021	9WPA0812S4001	—	9WPA0812P4S0011	80 × 80 × 25 mm	No	273
9WPA0824H4001	9WPA0824H4002	9WPA0824H4001	—	—	80 × 80 × 25 mm	Yes	273
9WPA0824H40011	9WPA0824H40021	9WPA0824H40011	—	—	80 × 80 × 25 mm	No	273
9WPA0824P4G001	9WPA0824G4002	9WPA0824G4001	9WPA0824G4D001	9WPA0824P4G001	80 × 80 × 25 mm	Yes	273
9WPA0824P4G0011	—	—	—	9WPA0824P4G0011	80 × 80 × 25 mm	No	273
9WPA0912P4G001	9WPA0912G4002	9WPA0912G4001	9WPA0912G4D001	9WPA0912P4G001	92 × 92 × 25 mm	Yes	282
9WPA0912P4G0011	—	—	—	9WPA0912P4G0011	92 × 92 × 25 mm	No	282
9WPA0924B4001	9WPA0924B4002	9WPA0924B4001	9WPA0924B4D001	—	92 × 92 × 25 mm	Yes	282
9WPA0924B40011	9WPA0924B40021	9WPA0924B40011	9WPA0924B4D0011	—	92 × 92 × 25 mm	No	282
9WPA0924F4001	9WPA0924F4002	9WPA0924F4001	9WPA0924F4D001	—	92 × 92 × 25 mm	Yes	282
9WPA0924F40011	9WPA0924F40021	9WPA0924F40011	9WPA0924F4D0011	—	92 × 92 × 25 mm	No	282
9WPA0924H4001	9WPA0924H4002	9WPA0924H4001	9WPA0924H4D001	—	92 × 92 × 25 mm	Yes	282
9WPA0924H40011		9WPA0924H40011	—	—	92 × 92 × 25 mm	No	282
9WPA0924P4G001	9WPA0924G4002	9WPA0924G4001	9WPA0924G4D001	9WPA0924P4G001	92 × 92 × 25 mm	Yes	282

Note 1: For compliance with standards, see individual product pages. Please contact your point of sale regarding low-speed sensors.
Note 2: The » mark indicates Short Lead Time Service applicable models. See p. 664 for details.

Models listed in product pages	List of models (The models listed on the right of the models listed in product pages are option models. Option models may not necessarily comply with the same standards as the models listed in product pages. Contact us for details of the "—" models.)				Frame size	Rib	page
	Without sensor	With pulse sensor	With lock sensor	With PWM control and pulse sensor			
9WPA0924P4G0011	—	—	—	9WPA0924P4G0011	92 × 92 × 25 mm	No	282
9WPA0924S4001	9WPA0924S4002	9WPA0924S4001	9WPA0924S4D001	—	92 × 92 × 25 mm	Yes	282
9WPA0924S40011	—	9WPA0924S40011	—	—	92 × 92 × 25 mm	No	282
9WV0812P1M001	—	9WV0812M1001	9WV0812M1D001	9WV0812P1M001	80 × 80 × 38 mm	Yes	280
9WV0812P1M0011	—	—	—	9WV0812P1M0011	80 × 80 × 38 mm	No	280
9WV0848P1H001	—	—	—	9WV0848P1H001	80 × 80 × 38 mm	Yes	280
9WV0848P1H0011	—	—	—	9WV0848P1H0011	80 × 80 × 38 mm	No	280
9WV0924P1H001	9WV0924H1002	—	9WV0924H1D001	9WV0924P1H001	92 × 92 × 38 mm	Yes	292
9WV0948P1H001	—	—	—	9WV0948P1H001	92 × 92 × 38 mm	Yes	292
9WV1212P1J001	9WV1212J1002	—	9WV1212J1D001	9WV1212P1J001	120 × 120 × 38 mm	No	294
9WV1224P1H001	9WV1224H102	9WV1224H101	9WV1224H1D001	9WV1224P1H001	120 × 120 × 38 mm	No	294
9WV1224P1J601	9WV1224J1002	9WV1224J1001	—	9WV1224P1J601	120 × 120 × 38 mm	No	294
9WV1248P1J001	9WV1248J1002	9WV1248J1001	9WV1248J1D001	9WV1248P1J001	120 × 120 × 38 mm	No	294

Note 1: For compliance with standards, see individual product pages. Please contact your point of sale regarding low-speed sensors.
Note 2: The mark indicates Short Lead Time Service applicable models. See p. 664 for details.

Model Index in Ascending Order - ACDC Fans

Models listed in product pages	List of models (The models listed on the right of the models listed in product pages are option models. Option models may not necessarily comply with the same standards as the models listed in product pages. Contact us for details of the "—" models.)			Frame size	Rib	Set model no.	page
	Without sensor	With low-speed sensor	With PWM control and pulse sensor				
9AD0901H12	» 9AD0901H12	» 9AD0901H1H	—	92 × 92 × 38 mm	Yes	ST1-9AD0901H12	490
9AD0901H121	9AD0901H121	» 9AD0901H1H1	—	92 × 92 × 38 mm	No	—	490
9AD0901H1H	» 9AD0901H12	» 9AD0901H1H	—	92 × 92 × 38 mm	Yes	ST1-9AD0901H1H	490
9AD0901H1H1	9AD0901H121	» 9AD0901H1H1	—	92 × 92 × 38 mm	No	—	490
9AD0901M12	» 9AD0901M12	» 9AD0901M1H	—	92 × 92 × 38 mm	Yes	ST1-9AD0901M12	490
9AD0901M121	9AD0901M121	» 9AD0901M1H1	—	92 × 92 × 38 mm	No	—	490
9AD0901M1H	» 9AD0901M12	» 9AD0901M1H	—	92 × 92 × 38 mm	Yes	ST1-9AD0901M1H	490
9AD0901M1H1	9AD0901M121	» 9AD0901M1H1	—	92 × 92 × 38 mm	No	—	490
9AD1201H4002	» 9AD1201H4002	» 9AD1201H4H001	9AD1201P4H001	120 × 120 × 25 mm	Yes	—	493
9AD1201H40021	9AD1201H40021	9AD1201H4H0011	9AD1201P4H0011	120 × 120 × 25 mm	No	—	493
9AD1201H4H001	» 9AD1201H4002	» 9AD1201H4H001	9AD1201P4H001	120 × 120 × 25 mm	Yes	—	493
9AD1201H4H0011	9AD1201H40021	9AD1201H4H0011	9AD1201P4H0011	120 × 120 × 25 mm	No	—	493
9AD1201P4H001	» 9AD1201H4002	» 9AD1201H4H001	9AD1201P4H001	120 × 120 × 25 mm	Yes	—	493
9AD1201P4H0011	9AD1201H40021	9AD1201H4H0011	9AD1201P4H0011	120 × 120 × 25 mm	No	—	493
9AD1201M4002	» 9AD1201M4002	» 9AD1201M4H001	—	120 × 120 × 25 mm	Yes	—	493
9AD1201M40021	9AD1201M40021	9AD1201M4H0011	—	120 × 120 × 25 mm	No	—	493
9AD1201M4H001	» 9AD1201M4002	» 9AD1201M4H001	—	120 × 120 × 25 mm	Yes	—	493
9AD1201M4H0011	9AD1201M40021	9AD1201M4H0011	—	120 × 120 × 25 mm	No	—	493
9AD1201L4002	» 9AD1201L4002	» 9AD1201L4H001	—	120 × 120 × 25 mm	Yes	—	493
9AD1201L40021	9AD1201L40021	9AD1201L4H0011	—	120 × 120 × 25 mm	No	—	493
9AD1201L4H001	» 9AD1201L4002	» 9AD1201L4H001	—	120 × 120 × 25 mm	Yes	—	493
9AD1201L4H0011	9AD1201L40021	9AD1201L4H0011	—	120 × 120 × 25 mm	No	—	493
9AD1201H12	» 9AD1201H12	» 9AD1201H1H	—	120 × 120 × 38 mm	Yes	ST1-9AD1201H12	502
9AD1201H121	9AD1201H121	» 9AD1201H1H1	—	120 × 120 × 38 mm	No	—	502
9AD1201H1H	» 9AD1201H12	» 9AD1201H1H	—	120 × 120 × 38 mm	Yes	ST1-9AD1201H1H	502
9AD1201H1H1	9AD1201H121	» 9AD1201H1H1	—	120 × 120 × 38 mm	No	—	502
9AD1601H5002	9AD1601H5002	—	—	160 × 160 × 51 mm	No	—	505
9AD1601H5H001	—	9AD1601H5H001	—	160 × 160 × 51 mm	No	—	505
9AD1601H5HT01	—	» 9AD1601H5HT01	—	160 × 160 × 51 mm	No	—	505
9AD1601H5T02	» 9AD1601H5T02	—	—	160 × 160 × 51 mm	No	—	505
9AD1601P5H003	—	—	9AD1601P5H003	160 × 160 × 51 mm	No	—	505
9AD1601P5HT03	—	—	9AD1601P5HT03	160 × 160 × 51 mm	No	—	505
9AD5701H5002	9AD5701H5002	—	—	Ø172 × 150 × 51 mm	No	—	511
9AD5701H5H001	—	9AD5701H5H001	—	Ø172 × 150 × 51 mm	No	—	511
9AD5701H5HT01	—	» 9AD5701H5HT01	—	Ø172 × 150 × 51 mm	No	—	511
9AD5701H5T02	» 9AD5701H5T02	—	—	Ø172 × 150 × 51 mm	No	—	511
9AD5701P5H003	9AD5701H5002	9AD5701H5H001	9AD5701P5H003	Ø172 × 150 × 51 mm	No	—	511
9AD5701P5HT03	» 9AD5701H5T02	» 9AD5701H5HT01	9AD5701P5HT03	Ø172 × 150 × 51 mm	No	—	511
9ADA1201G1002	9ADA1201G1002	9ADA1201G1H001	—	120 × 120 × 38 mm	Yes	—	496
9ADA1201G10021	9ADA1201G10021	» 9ADA1201G1H0011	—	120 × 120 × 38 mm	No	—	496
9ADA1201G1H001	9ADA1201G1002	9ADA1201G1H001	—	120 × 120 × 38 mm	Yes	—	496
9ADA1201G1H0011	» 9ADA1201G10021	» 9ADA1201G1H0011	—	120 × 120 × 38 mm	No	—	496
9ADA1201H1002	9ADA1201H1002	9ADA1201H1H001	—	120 × 120 × 38 mm	Yes	—	496
9ADA1201H10021	» 9ADA1201H10021	9ADA1201H1H0011	—	120 × 120 × 38 mm	No	—	496
9ADA1201P1G001	—	—	9ADA1201P1G001	120 × 120 × 38 mm	Yes	—	496
9ADA1201P1G0011	—	—	9ADA1201P1G0011	120 × 120 × 38 mm	No	—	496
9ADAW1201H1002	9ADAW1201H1002	—	—	120 × 120 × 38 mm	Yes	—	499
9ADAW1201H10021	9ADAW1201H10021	—	—	120 × 120 × 38 mm	No	—	499
9ADAW1201H1H001	—	9ADAW1201H1H001	—	120 × 120 × 38 mm	Yes	—	499
9ADAW1201H1H0011	—	9ADAW1201H1H0011	—	120 × 120 × 38 mm	No	—	499
9ADAW1201P1H001	—	—	9ADAW1201P1H001	120 × 120 × 38 mm	Yes	—	499
9ADAW1201P1H0011	—	—	9ADAW1201P1H0011	120 × 120 × 38 mm	No	—	499
9ADB1TS11P0F001	—	—	9ADB1TS11P0F001	270 × 270 × 119 mm	—	—	535
9ADB1TS11P0G001	—	—	9ADB1TS11P0G001	270 × 270 × 119 mm	—	—	535
9ADB1TS23P0F001	—	—	9ADB1TS23P0F001	270 × 270 × 119 mm	—	—	535
9ADB1TS23P0G001	—	—	9ADB1TS23P0G001	270 × 270 × 119 mm	—	—	535
9ADB1W1TS11P0H001	—	—	9ADB1W1TS11P0H001	270 × 270 × 119 mm	—	—	538

Note 1: For compliance with standards, see individual product pages.
Note 2: The » mark indicates Short Lead Time Service applicable models. See p. 664 for details.

Models listed in product pages	List of models (The models listed on the right of the models listed in product pages are option models. Option models may not necessarily comply with the same standards as the models listed in product pages. Contact us for details of the "—" models.)			Frame size	Rib	Set model no.	page
	Without sensor	With low-speed sensor	With PWM control and pulse sensor				
9ADB1W1TS11P0M001	—	—	9ADB1W1TS11P0M001	270 × 270 × 119 mm	—	—	538
9ADB1W1TS23P0H001	—	—	9ADB1W1TS23P0H001	270 × 270 × 119 mm	—	—	538
9ADB1W1TS23P0M001	—	—	9ADB1W1TS23P0M001	270 × 270 × 119 mm	—	—	538
9ADTS11P0F001	—	—	9ADTS11P0F001	Ø225 × 99 mm	—	—	523
9ADTS11P0G001	—	—	9ADTS11P0G001	Ø225 × 99 mm	—	—	523
9ADTS23P0F001	—	—	9ADTS23P0F001	Ø225 × 99 mm	—	—	523
9ADTS23P0G001	—	—	9ADTS23P0G001	Ø225 × 99 mm	—	—	523
9ADTU11P0G001	—	—	9ADTU11P0G001	Ø190 × 88 mm	—	—	517
9ADTU23P0G001	—	—	9ADTU23P0G001	Ø190 × 88 mm	—	—	517
9ADTV11P0G001	—	—	9ADTV11P0G001	Ø250 × 99 mm	—	—	529
9ADTV23P0G001	—	—	9ADTV23P0G001	Ø250 × 99 mm	—	—	529
9ADW1601H5002	9ADW1601H5002	9ADW1601H5H001	9ADW1601P5H003	160 × 160 × 51 mm	No	—	508
9ADW1601H5H001	9ADW1601H5002	9ADW1601H5H001	9ADW1601P5H003	160 × 160 × 51 mm	No	—	508
9ADW1601H5HT01	9ADW1601H5T02	9ADW1601H5HT01	9ADW1601P5HT03	160 × 160 × 51 mm	No	—	508
9ADW1601H5T02	9ADW1601H5T02	9ADW1601H5HT01	9ADW1601P5HT03	160 × 160 × 51 mm	No	—	508
9ADW1601P5H003	9ADW1601H5002	9ADW1601H5H001	9ADW1601P5H003	160 × 160 × 51 mm	No	—	508
9ADW1601P5HT03	9ADW1601H5T02	9ADW1601H5HT01	9ADW1601P5HT03	160 × 160 × 51 mm	No	—	508
9ADW1TS11P0H001	—	—	9ADW1TS11P0H001	Ø225 × 99 mm	—	—	526
9ADW1TS11P0M001	—	—	9ADW1TS11P0M001	Ø225 × 99 mm	—	—	526
9ADW1TS23P0H001	—	—	9ADW1TS23P0H001	Ø225 × 99 mm	—	—	526
9ADW1TS23P0M001	—	—	9ADW1TS23P0M001	Ø225 × 99 mm	—	—	526
9ADW1TU11P0G001	—	—	9ADW1TU11P0G001	Ø190 × 88 mm	—	—	520
9ADW1TU23P0G001	—	—	9ADW1TU23P0G001	Ø190 × 88 mm	—	—	520
9ADW1TV11P0G001	—	—	9ADW1TV11P0G001	Ø250 × 99 mm	—	—	532
9ADW1TV23P0G001	—	—	9ADW1TV23P0G001	Ø250 × 99 mm	—	—	532
9ADW5701H5002	9ADW5701H5002	9ADW5701H5H001	9ADW5701P5H003	Ø172 × 150 × 51 mm	No	—	514
9ADW5701H5H001	9ADW5701H5002	9ADW5701H5H001	9ADW5701P5H003	Ø172 × 150 × 51 mm	No	—	514
9ADW5701H5HT01	9ADW5701H5T02	9ADW5701H5HT01	9ADW5701P5HT03	Ø172 × 150 × 51 mm	No	—	514
9ADW5701H5T02	9ADW5701H5T02	9ADW5701H5HT01	9ADW5701P5HT03	Ø172 × 150 × 51 mm	No	—	514
9ADW5701P5H003	9ADW5701H5002	9ADW5701H5H001	9ADW5701P5H003	Ø172 × 150 × 51 mm	No	—	514
9ADW5701P5HT03	9ADW5701H5T02	9ADW5701H5HT01	9ADW5701P5HT03	Ø172 × 150 × 51 mm	No	—	514

Note 1: For compliance with standards, see individual product pages.
Note 2: The mark indicates Short Lead Time Service applicable models. See p. 664 for details.

Model Index in Ascending Order/Safety Standards List - AC Fans

Models listed in product pages	Frame size	Model	Rated voltage [V]	UL	CSA	TÜV	CE	PSE	UKCA	Set model no.	page
109-033UL	80 × 80 × 42 mm	San Ace 80	115	✓	✓	✓	✓	✓	✓	ST1-109-033UL	552
109-040UL	80 × 80 × 42 mm	San Ace 80	100	✓	✓	✓	✓	✓	✓	ST1-109-040UL	552
109-041UL	80 × 80 × 42 mm	San Ace 80	200	✓	✓	✓	✓	✓	✓	ST1-109-041UL	552
109-043UL	80 × 80 × 42 mm	San Ace 80	115	✓	✓	✓	✓	✓	✓	ST1-109-043UL	552
109-044UL	80 × 80 × 42 mm	San Ace 80	230	✓	✓	✓	✓	✓	✓	ST1-109-044UL	552
109-047UL	80 × 80 × 42 mm	San Ace 80	100	✓	✓	✓	✓	✓	✓	ST1-109-047UL	552
109-130	60 × 60 × 38 mm	San Ace 60	100	✓	—	✓	✓	—	✓	ST1-109-130	544
109-133	60 × 60 × 38 mm	San Ace 60	115	✓	—	✓	✓	—	✓	ST1-109-133	544
109-150	80 × 80 × 38 mm	San Ace 80	100	✓	✓	✓	✓	✓	✓	ST1-109-150	550
109-151	80 × 80 × 38 mm	San Ace 80	200	✓	✓	✓	✓	✓	✓	ST1-109-151	550
109-153	80 × 80 × 38 mm	San Ace 80	115	✓	✓	✓	✓	✓	✓	ST1-109-153	550
109-154	80 × 80 × 38 mm	San Ace 80	230	✓	✓	✓	✓	✓	✓	ST1-109-154	550
109-180	60 × 60 × 28 mm	San Ace 60	100	✓	—	✓	✓	—	✓	ST1-109-180	542
109-183	60 × 60 × 28 mm	San Ace 60	115	✓	—	✓	✓	—	✓	ST1-109-183	542
109-210	80 × 80 × 20 mm	San Ace 80	100	✓	✓	✓	✓	—	✓	ST1-109-210	546
109-213	80 × 80 × 20 mm	San Ace 80	115	✓	✓	✓	✓	—	✓	ST1-109-213	546
109-311	ø172 × 51 mm (Round type)	San Ace 172	100	✓	✓	✓	✓	✓	✓	ST1-109-311	572
109-312	ø172 × 51 mm (Round type)	San Ace 172	200	✓	✓	✓	✓	✓	✓	ST1-109-312	572
109-313	ø172 × 51 mm (Round type)	San Ace 172	230	✓	✓	✓	✓	✓	✓	ST1-109-313	572
109-314	ø172 × 51 mm (Round type)	San Ace 172	115	✓	✓	✓	✓	✓	✓	ST1-109-314	572
109-371	ø172 × 51 mm (with sensor)	San Ace 172	100	✓	—	✓	✓	✓	✓	ST1-109-371-20 ST1-109-371-30	572
109-372	ø172 × 51 mm (with sensor)	San Ace 172	200	✓	—	✓	✓	✓	✓	ST1-109-372-20 ST1-109-372-30	572
109-373	ø172 × 51 mm (with sensor)	San Ace 172	230	✓	—	✓	✓	✓	✓	ST1-109-373-20 ST1-109-373-30	572
109-374	ø172 × 51 mm (with sensor)	San Ace 172	115	✓	—	✓	✓	✓	✓	ST1-109-374-20 ST1-109-374-30	572
109-601	160 × 160 × 51 mm	San Ace 160	100	✓	✓	✓	✓	✓	✓	ST1-109-601	567
109-602	160 × 160 × 51 mm	San Ace 160	200	✓	✓	✓	✓	✓	✓	ST1-109-602	567
109-603	160 × 160 × 51 mm	San Ace 160	230	✓	✓	✓	✓	✓	✓	ST1-109-603	567
109-604	160 × 160 × 51 mm	San Ace 160	115	✓	✓	✓	✓	✓	✓	ST1-109-604	567
109-641	160 × 160 × 51 mm (with sensor)	San Ace 160	100	✓	—	✓	✓	✓	✓	ST1-109-641-20 ST1-109-641-30	567
109-642	160 × 160 × 51 mm (with sensor)	San Ace 160	200	✓	—	✓	✓	✓	✓	ST1-109-642-20 ST1-109-642-30	567
109-643	160 × 160 × 51 mm (with sensor)	San Ace 160	230	✓	—	✓	✓	✓	✓	ST1-109-643-20 ST1-109-643-30	567
109-644	160 × 160 × 51 mm (with sensor)	San Ace 160	115	✓	—	✓	✓	✓	✓	ST1-109-644-20 ST1-109-644-30	567
109S005	120 × 120 × 38 mm	San Ace 120	100	—	—	—	—	✓	—	ST1-109S005	562
109S005UL	120 × 120 × 38 mm	San Ace 120	100	✓	✓	✓	✓	✓	✓	ST1-109S005UL	562
109S006	120 × 120 × 38 mm	San Ace 120	100	—	—	—	—	✓	—	ST1-109S006	562
109S006UL	120 × 120 × 38 mm	San Ace 120	100/115	✓	✓	✓	✓	✓	✓	ST1-109S006UL	562
109S008	120 × 120 × 38 mm	San Ace 120	200	—	—	—	—	✓	—	ST1-109S008	562
109S008UL	120 × 120 × 38 mm	San Ace 120	200	✓	✓	✓	✓	✓	✓	ST1-109S008UL	562
109S010	120 × 120 × 38 mm	San Ace 120	200	—	—	—	—	✓	—	ST1-109S010	562
109S010UL	120 × 120 × 38 mm	San Ace 120	200/240	✓	✓	✓	✓	✓	✓	ST1-109S010UL	562
109S013	120 × 120 × 38 mm	San Ace 120	100	—	—	—	—	✓	—	ST1-109S013	562
109S013UL	120 × 120 × 38 mm	San Ace 120	100	✓	✓	✓	✓	✓	✓	ST1-109S013UL	562
109S024	120 × 120 × 38 mm	San Ace 120	120	—	—	—	—	✓	—	ST1-109S024	562
109S024UL	120 × 120 × 38 mm	San Ace 120	115	✓	✓	✓	✓	✓	✓	ST1-109S024UL	562
109S025	120 × 120 × 38 mm	San Ace 120	230	—	—	—	—	✓	—	ST1-109S025	562
109S025UL	120 × 120 × 38 mm	San Ace 120	230	✓	✓	✓	✓	✓	✓	ST1-109S025UL	562
109S029UL	120 × 120 × 38 mm	San Ace 120	100	✓	✓	✓	✓	✓	✓	ST1-109S029UL	562
109S030	80 × 80 × 25 mm	San Ace 80	100	✓	✓	✓	✓	✓	✓	ST1-109S030	548
109S031	80 × 80 × 25 mm	San Ace 80	200	✓	✓	✓	✓	✓	✓	ST1-109S031	548
109S033	80 × 80 × 25 mm	San Ace 80	115	✓	✓	✓	✓	✓	✓	ST1-109S033	548
109S034	80 × 80 × 25 mm	San Ace 80	230	✓	✓	✓	✓	✓	✓	ST1-109S034	548
109S050	80 × 80 × 25 mm	San Ace 80	100	✓	✓	✓	✓	✓	✓	ST1-109S050	548
109S051	80 × 80 × 25 mm	San Ace 80	200	✓	✓	✓	✓	✓	✓	ST1-109S051	548
109S053	80 × 80 × 25 mm	San Ace 80	115	✓	✓	✓	✓	✓	✓	ST1-109S053	548
109S054	80 × 80 × 25 mm	San Ace 80	230	✓	✓	✓	✓	✓	✓	ST1-109S054	548
109S072UL	120 × 120 × 38 mm	San Ace 120	230	✓	✓	✓	✓	✓	✓	ST1-109S072UL	562
109S074UL	120 × 120 × 38 mm	San Ace 120	115	✓	✓	✓	✓	✓	✓	ST1-109S074UL	562

Models listed in product pages	Frame size	Model	Rated voltage [V]	UL	CSA	TÜV	CE	PSE	UKCA	Set model no.	page
109S075UL	120 × 120 × 38 mm	San Ace 120	100	✓	✓	✓	✓	✓	✓	ST1-109S075UL	562
109S078UL	120 × 120 × 38 mm	San Ace 120	200	✓	✓	✓	✓	✓	✓	ST1-109S078UL	562
109S081	120 × 120 × 25 mm	San Ace 120	100	✓	✓	✓	✓	✓	✓	ST1-109S081	558
109S082	120 × 120 × 25 mm	San Ace 120	200	✓	✓	✓	✓	✓	✓	ST1-109S082	558
109S083	120 × 120 × 25 mm	San Ace 120	115	✓	✓	✓	✓	✓	✓	ST1-109S083	558
109S084	120 × 120 × 25 mm	San Ace 120	115	✓	✓	✓	✓	✓	✓	ST1-109S084	558
109S085	120 × 120 × 25 mm	San Ace 120	100	✓	✓	✓	✓	✓	✓	ST1-109S085	558
109S086	120 × 120 × 25 mm	San Ace 120	100	✓	✓	✓	✓	✓	✓	ST1-109S086	558
109S087	120 × 120 × 25 mm	San Ace 120	230	✓	✓	✓	✓	✓	✓	ST1-109S087	558
109S088	120 × 120 × 25 mm	San Ace 120	200	✓	✓	✓	✓	✓	✓	ST1-109S088	558
109S089	120 × 120 × 25 mm	San Ace 120	230	✓	✓	✓	✓	✓	✓	ST1-109S089	558
109S091	92 × 92 × 25 mm	San Ace 92	100	✓	✓	✓	✓	✓	✓	ST1-109S091	554
109S092	92 × 92 × 25 mm	San Ace 92	200	✓	✓	✓	✓	✓	✓	ST1-109S092	554
109S093	92 × 92 × 25 mm	San Ace 92	115	✓	✓	✓	✓	✓	✓	ST1-109S093	554
109S094	92 × 92 × 25 mm	San Ace 92	230	✓	✓	✓	✓	✓	✓	ST1-109S094	554
109S095	92 × 92 × 25 mm	San Ace 92	100	✓	✓	✓	✓	✓	✓	ST1-109S095	554
109S096	92 × 92 × 25 mm	San Ace 92	100	✓	✓	✓	✓	✓	✓	ST1-109S096	554
109S192	92 × 92 × 25 mm	San Ace 92	200	✓	✓	✓	✓	✓	✓	ST1-109S192	554
109S193	92 × 92 × 25 mm	San Ace 92	115	✓	✓	✓	✓	✓	✓	ST1-109S193	554
109S194	92 × 92 × 25 mm	San Ace 92	230	✓	✓	✓	✓	✓	✓	ST1-109S194	554
109S301	ø172 × 150 × 51 mm (Sidecut type)	San Ace 172	100	✓	✓	✓	✓	✓	✓	ST1-109S301	570
109S302	ø172 × 150 × 51 mm (Sidecut type)	San Ace 172	200	✓	✓	✓	✓	✓	✓	ST1-109S302	570
109S303	ø172 × 150 × 51 mm (Sidecut type)	San Ace 172	230	✓	✓	✓	✓	✓	✓	ST1-109S303	570
109S304	ø172 × 150 × 51 mm (Sidecut type)	San Ace 172	115	✓	✓	✓	✓	✓	✓	ST1-109S304	570
109S405UL	120 × 120 × 38 mm (with sensor)	San Ace 120	100	✓	—	✓	✓	✓	✓	ST1-109S405UL-20 ST1-109S405UL-30	563
109S406UL	120 × 120 × 38 mm (with sensor)	San Ace 120	100	✓	—	✓	✓	✓	✓	ST1-109S406UL-20 ST1-109S406UL-30	563
109S408UL	120 × 120 × 38 mm (with sensor)	San Ace 120	200	✓	—	✓	✓	✓	✓	ST1-109S408UL-20 ST1-109S408UL-30	563
109S424UL	120 × 120 × 38 mm (with sensor)	San Ace 120	115	✓	—	✓	✓	✓	✓	ST1-109S424UL-20 ST1-109S424UL-30	563
109S425UL	120 × 120 × 38 mm (with sensor)	San Ace 120	230	✓	—	✓	✓	✓	✓	ST1-109S425UL-20 ST1-109S425UL-30	563
109S429UL	120 × 120 × 38 mm (with sensor)	San Ace 120	100	✓	—	✓	✓	✓	✓	ST1-109S429UL-20 ST1-109S429UL-30	563
109S472UL	120 × 120 × 38 mm (with sensor)	San Ace 120	230	✓	—	✓	✓	✓	✓	ST1-109S472UL-20 ST1-109S472UL-30	563
109S474UL	120 × 120 × 38 mm (with sensor)	San Ace 120	115	✓	—	✓	✓	✓	✓	ST1-109S474UL-20 ST1-109S474UL-30	563
109S475UL	120 × 120 × 38 mm (with sensor)	San Ace 120	100	✓	—	✓	✓	✓	✓	ST1-109S475UL-20 ST1-109S475UL-30	563
109S478UL	120 × 120 × 38 mm (with sensor)	San Ace 120	200	✓	—	✓	✓	✓	✓	ST1-109S478UL-20 ST1-109S478UL-30	563
109S484	120 × 120 × 25 mm (with sensor)	San Ace 120	115	✓	—	✓	✓	✓	✓	ST1-109S484-20 ST1-109S484-30	558
109S485	120 × 120 × 25 mm (with sensor)	San Ace 120	100	✓	—	✓	✓	✓	✓	ST1-109S485-20 ST1-109S485-30	558
109S486	120 × 120 × 25 mm (with sensor)	San Ace 120	100	✓	—	✓	✓	✓	✓	ST1-109S486-20 ST1-109S486-30	558
109S487	120 × 120 × 25 mm (with sensor)	San Ace 120	230	✓	—	✓	✓	✓	✓	ST1-109S487-20 ST1-109S487-30	558
109S488	120 × 120 × 25 mm (with sensor)	San Ace 120	200	✓	—	✓	✓	✓	✓	ST1-109S488-20 ST1-109S488-30	558
109S491	92 × 92 × 25 mm (with sensor)	San Ace 92	100	✓	—	✓	✓	✓	✓	ST1-109S491-20 ST1-109S491-30	554
109S492	92 × 92 × 25 mm (with sensor)	San Ace 92	200	✓	—	✓	✓	✓	✓	ST1-109S492-20 ST1-109S492-30	554
109S493	92 × 92 × 25 mm (with sensor)	San Ace 92	115	✓	—	✓	✓	✓	✓	ST1-109S493-20 ST1-109S493-30	554
109S494	92 × 92 × 25 mm (with sensor)	San Ace 92	230	✓	—	✓	✓	✓	✓	ST1-109S494-20 ST1-109S494-30	554
109S495	92 × 92 × 25 mm (with sensor)	San Ace 92	100	✓	—	✓	✓	✓	✓	ST1-109S495-20 ST1-109S495-30	554
109S496	92 × 92 × 25 mm (with sensor)	San Ace 92	100	✓	—	✓	✓	✓	✓	ST1-109S496-20 ST1-109S496-30	554

Model Index in Ascending Order - Options

San Ace Controller

Model no.	Note	page
9CT1-001	With wireless LAN	576
9CT1-002	Without wireless LAN	
9CT1-U001	With wireless LAN, cUL certified	

PWM Controller

Model no.	Note	page
9PC8666X-S001	Box type	580
9PC8666X-S101		
9PC8045D-V001	PCB type	
9PC8045D-R001		
9PC8045D-T001		
9PC8045D-V101		
9PC8045D-R101		
9PC8045D-T101		

Airflow Tester

Model no.	page
9AT2560S-000□*	584
9AT2560A-000□*	
9AT2560C-000□*	

* The AC power plug shape differs with the number in □ of model numbers.
AC power plug included in models with 1 in □ is for Japan and North America regions (2 parallel flat pins + a round grounding pin), Input voltage: 100/120 VAC, 50/60 Hz
AC power plug included in models with 2 in □ is for Europe region (2 round pins + a female grounding contact), Input voltage: 220 VAC, 50 Hz
AC power plug included in models with 3 in □ is for China region (2 angled flat pins + a flat grounding pin), Input voltage: 220 VAC, 50 Hz
Product also available without an AC power cable. Model no. 9AT2560S-0000, 9AT2560A-0000, 9AT2560C-0000

Finger Guards

Model no.	Category	Matching fan size	page
109-019E	Finger Guards	120 mm sq. type	591
109-019K	Finger Guards	120 mm sq. type	591
109-049E	Finger Guards	80 mm sq. type	590
109-049H	Finger Guards	80 mm sq. type	590
109-059	Finger Guards	40 mm sq. type	590
109-059H	Finger Guards	40 mm sq. type	590
109-099E	Finger Guards	92 mm sq., Ø100 mm type	591
109-099H	Finger Guards	92 mm sq., Ø100 mm type	591
109-1050	Finger Guards	36 mm sq. type	590
109-1051	Finger Guards	150 mm sq. type	591
109-1065	Finger Guards	38 mm sq. type	590
109-1066	Finger Guards	Ø172 mm type	592
109-1102	Finger Guards	Ø200 mm type	593
109-1102H	Finger Guards	Ø200 mm type	593
109-1104	Finger Guards	Ø150 mm type	591
109-1104H	Finger Guards	Ø150 mm type	591
109-1112	Finger Guards	Ø133 mm type	591
109-1112H	Finger Guards	Ø133 mm type	591
109-1128	Finger Guards	70 mm sq., Ø70 mm type	590
109-1137	Finger Guards	Ø225 mm type	593
109-1137H	Finger Guards	Ø225 mm type	593
109-1138	Finger Guards	Ø221 mm type	593
109-1138H	Finger Guards	Ø221 mm type	593
109-1139	Finger Guards	Ø136 mm type	591
109-1146	Finger Guards	270 mm sq. type	594
109-1146H	Finger Guards	270 mm sq. type	594
109-1147	Finger Guards	Ø92 mm type	590
109-1152	Finger Guards	Ø250 mm type	594
109-1152H	Finger Guards	Ø250 mm type	594
109-1155	Finger Guards	Ø172 mm type	592
109-1156	Finger Guards	52 mm sq. type	590
109-139E	Finger Guards	60 mm sq. type	590
109-139H	Finger Guards	60 mm sq. type	590
109-149E	Finger Guards	52 mm sq. type	590
109-319E	Finger Guards	Ø172 mm type	592
109-319H	Finger Guards	Ø172 mm type	592
109-319J	Finger Guards	Ø172 mm type	592
109-619E	Finger Guards	160 mm sq. type	591
109-619H	Finger Guards	160 mm sq. type	591
109-719	Finger Guards	140 mm sq. type	591
109-719H	Finger Guards	140 mm sq. type	591
109-720	Finger Guards	Ø200 mm type	593
109-720H	Finger Guards	Ø200 mm type	593
109-722	Finger Guards	127 mm sq., Ø175 mm, Ø190 mm type	591
109-722H	Finger Guards	127 mm sq., Ø175 mm, Ø190 mm type	591

Resin Finger Guards/Resin Filter Kits

Model no.	Category	Matching fan size	page
109-1000F13	Resin Filter Kits	120 mm sq. type	598
109-1000F20	Resin Filter Kits	120 mm sq. type	598
109-1000F30	Resin Filter Kits	120 mm sq. type	598
109-1000F40	Resin Filter Kits	120 mm sq. type	598
109-1001F13	Resin Filter Kits	92 mm sq. type	598
109-1001F20	Resin Filter Kits	92 mm sq. type	598
109-1001F30	Resin Filter Kits	92 mm sq. type	598
109-1001F40	Resin Filter Kits	92 mm sq. type	598
109-1002F13	Resin Filter Kits	80 mm sq. type	598
109-1002F20	Resin Filter Kits	80 mm sq. type	598
109-1002F30	Resin Filter Kits	80 mm sq. type	598
109-1002F40	Resin Filter Kits	80 mm sq. type	598
109-1003F13	Resin Filter Kits	60 mm sq. type	598
109-1003F20	Resin Filter Kits	60 mm sq. type	598
109-1003F30	Resin Filter Kits	60 mm sq. type	598
109-1003F40	Resin Filter Kits	60 mm sq. type	598
109-1000G	Resin Finger Guards	120 mm sq. type	597
109-1001G	Resin Finger Guards	92 mm sq. type	597
109-1002G	Resin Finger Guards	80 mm sq. type	597
109-1003G	Resin Finger Guards	60 mm sq. type	597

Replacement filter

Model no.	Category	Matching fan size	page
109-1000M13	Replacement filter	120 mm sq. type	598
109-1000M20	Replacement filter	120 mm sq. type	598
109-1000M30	Replacement filter	120 mm sq. type	598
109-1000M40	Replacement filter	120 mm sq. type	598
109-1001M13	Replacement filter	92 mm sq. type	598
109-1001M20	Replacement filter	92 mm sq. type	598
109-1001M30	Replacement filter	92 mm sq. type	598
109-1001M40	Replacement filter	92 mm sq. type	598
109-1002M13	Replacement filter	80 mm sq. type	598
109-1002M20	Replacement filter	80 mm sq. type	598
109-1002M30	Replacement filter	80 mm sq. type	598
109-1002M40	Replacement filter	80 mm sq. type	598
109-1003M13	Replacement filter	60 mm sq. type	598
109-1003M20	Replacement filter	60 mm sq. type	598
109-1003M30	Replacement filter	60 mm sq. type	598
109-1003M40	Replacement filter	60 mm sq. type	598

EMC guards/Inlet nozzle for centrifugal fan and splash proof centrifugal fan

Model no.	Category	Matching fan size	page
109-1036	EMC guards	ø172 mm type	596
109-1037	EMC guards	120 mm sq. type	596
109-1038	EMC guards	80 mm sq. type	596
109-1039	EMC guards	80 mm sq. type	596
109-1040	EMC guards	92 mm sq. type	596
109-1069	Inlet nozzle for centrifugal fan and splash proof centrifugal fan	ø133 mm type	595
109-1069H	Inlet nozzle for centrifugal fan and splash proof centrifugal fan	ø133 mm type	595
109-1073	Inlet nozzle for centrifugal fan and splash proof centrifugal fan	ø175 mm, ø190 mm type	595
109-1073H	Inlet nozzle for centrifugal fan and splash proof centrifugal fan	ø175 mm, ø190 mm type	595
109-1080	Inlet nozzle for centrifugal fan and splash proof centrifugal fan	ø100 mm type	595
109-1080H	Inlet nozzle for centrifugal fan and splash proof centrifugal fan	ø100 mm type	595
109-1081	Inlet nozzle for centrifugal fan and splash proof centrifugal fan	ø150 mm type	595
109-1081H	Inlet nozzle for centrifugal fan and splash proof centrifugal fan	ø150 mm type	595
109-1106	Inlet nozzle for centrifugal fan and splash proof centrifugal fan	ø70 mm type	595
109-1134	Inlet nozzle for centrifugal fan and splash proof centrifugal fan	ø225 mm type	595
109-1134H	Inlet nozzle for centrifugal fan and splash proof centrifugal fan	ø225 mm type	595
109-1135	Inlet nozzle for centrifugal fan and splash proof centrifugal fan	ø221 mm type	595
109-1135H	Inlet nozzle for centrifugal fan and splash proof centrifugal fan	ø221 mm type	595
109-1151	Inlet nozzle for centrifugal fan and splash proof centrifugal fan	ø250 mm type	595
109-1151H	Inlet nozzle for centrifugal fan and splash proof centrifugal fan	ø250 mm type	595

Filter kits/Screen kits

Model no.	Category	Matching fan size	Note	page
109-018	Filter kits	120 × 120 × 38 mm	Not mountable on AC fans with a sensor or ACDC fans.	600
109-020	Screen kits	120 × 120 × 38 mm		600

Plug Cord

Model no.	UL	CSA	PSE	Applicable model	page
489-006-L10			✓	120 × 120 × 38 mm	601
489-006-L21			✓	120 × 120 × 38 mm	601
489-006-L35			✓	120 × 120 × 38 mm	601
489-007-L10	✓	✓		120 × 120 × 38 mm	602
489-007-L21	✓	✓		120 × 120 × 38 mm	602
489-008-L10			✓	80 × 80 × 42 mm	601
489-008-L21			✓	80 × 80 × 42 mm	601
489-008-L35			✓	80 × 80 × 42 mm	601
489-016-L10			✓	120 × 120 × 25 mm 92 × 92 × 25 mm 80 × 80 × 25 mm 80 × 80 × 38 mm	601
489-016-L21			✓	120 × 120 × 25 mm 92 × 92 × 25 mm 80 × 80 × 25 mm 80 × 80 × 38 mm	601
489-037-L10			✓	120 × 120 × 38 mm	601
489-037-L21			✓	120 × 120 × 38 mm	601
489-037-L35			✓	120 × 120 × 38 mm	601
489-047-L10	✓	✓		120 × 120 × 25 mm 92 × 92 × 25 mm 80 × 80 × 25 mm 80 × 80 × 38 mm	602
489-047-L21	✓	✓		120 × 120 × 25 mm 92 × 92 × 25 mm 80 × 80 × 25 mm 80 × 80 × 38 mm	602
489-084-L10	✓	✓		ø172 × 51 mm ø172 × 150 × 51 mm 160 × 160 × 51 mm	602
489-084-L21	✓	✓		ø172 × 51 mm ø172 × 150 × 51 mm 160 × 160 × 51 mm	602
489-1619-L10			✓	ø172 × 51 mm ø172 × 150 × 51 mm 160 × 160 × 51 mm	601
489-1619-L21			✓	ø172 × 51 mm ø172 × 150 × 51 mm 160 × 160 × 51 mm	601
489-1635-L10	✓	✓	✓	ACDC Fan (92 × 92 × 38 mm) ACDC Fan (120 × 120 × 38 mm 9AD type)	603
489-1635-L21	✓	✓	✓		603
489-1652-L10	✓	✓	✓	160 × 160 × 51 mm	602
489-1652-L21	✓	✓	✓	160 × 160 × 51 mm	602

Typical Connectors for DC Fans ····· page 604

Sensor extension wiring harness

Model no.	Compatible fan	page
489-1636	San Ace 92AD 9AD type (with sensor) San Ace 120AD 9AD type (120 × 120 × 38 mm, with sensor)	603

Terminal model wiring harness

Model no.	Compatible fan	page
489-1647	San Ace 160AD 9AD type (terminal type)	603
489-1648	San Ace 160AD 9ADW type (terminal type)	
489-1650	San Ace 172AD 9AD type (terminal type)	
489-1651	San Ace 172AD 9ADW type (terminal type)	

Following models were deleted in this latest version of catalog. However, these models are not discontinued product. Please contact us for further assistance if necessary.

DC Fan

Size	Model no.	Frame material	Rated voltage [V]	Operating voltage range [V]	Rated current [A]	Rated input [W]	Rated speed [min⁻¹]	Max. airflow [m³/min]	Max. airflow [CFM]	Max. static pressure [Pa]	Max. static pressure [inchH₂O]	SPL [dB (A)]	Operating temperature [°C]	Expected life [h]
52×52×15 mm	109P0505M701	Plastics	5	4.5 to 5.5	0.15	0.75	3700	0.205	7.2	21.4	0.086	22	-20 to +70	60000/60°C
80×80×20 mm	109P0848C601	Plastics	48	38 to 57.6	0.08	3.84	3700	1.07	37.8	46	0.185	39	-20 to +70	40000/60°C
80×80×20 mm	109P0848H601	Plastics	48	38 to 57.6	0.05	2.4	2900	0.84	29.7	29.4	0.118	31	-20 to +60	40000/60°C
92×92×25 mm	9GA0912W401	Plastics	12	7 to 16	0.19	2.28	3300	1.45	51.2	45.6	0.18	31	-20 to +70	60000/60°C
92×92×25 mm	9GA0912L401	Plastics	12	10.2 to 13.8	0.09	1.08	2000	0.87	30.7	16.7	0.067	21	-20 to +70	60000/60°C
92×92×25 mm	9GA0924W401	Plastics	24	12 to 28.8	0.09	2.16	3300	1.45	51.2	45.6	0.18	31	-20 to +70	60000/60°C
92×92×25 mm	9GA0924L401	Plastics	24	14 to 27.6	0.03	0.72	2000	0.87	30.7	16.7	0.067	21	-20 to +70	60000/60°C
127×127×38 mm	109P1312S101	Plastics	12	10.2 to 13.8	1.3	15.6	3300	4.2	148	117.6	0.472	47	-20 to +60	40000/60°C
127×127×38 mm	109P1312H101	Plastics	12	10.2 to 13.8	0.82	9.84	2950	3.8	134	98	0.394	45	-20 to +60	40000/60°C
127×127×38 mm	109P1324S101	Plastics	24	20.4 to 27.6	0.55	13.2	3300	4.2	148	117.6	0.472	47	-20 to +60	40000/60°C
127×127×38 mm	109P1324H101	Plastics	24	20.4 to 27.6	0.41	9.84	2950	3.8	134	98	0.394	45	-20 to +60	40000/60°C
127×127×38 mm	109P1348S101	Plastics	48	40.8 to 55.2	0.3	14.4	3300	4.2	148	117.6	0.472	47	-20 to +60	40000/60°C
127×127×38 mm	109P1348H101	Plastics	48	40.8 to 55.2	0.2	9.6	2950	3.8	134	98	0.394	45	-20 to +60	40000/60°C
127×127×38 mm	109E1312A101	Aluminum	12	10.2 to 13.8	1.4	16.8	3850	4.81	170	155	0.622	52	-20 to +70	60000/60°C
127×127×38 mm	109E1312S101	Aluminum	12	10.2 to 13.8	1.2	14.4	3450	4.37	154	125	0.502	49	-20 to +70	60000/60°C
127×127×38 mm	109E1324G101	Aluminum	24	20.4 to 27.6	1.1	26.4	4550	5.66	200	216	0.867	57	-20 to +60	40000/60°C
127×127×38 mm	109E1324A101	Aluminum	24	20.4 to 27.6	0.7	16.8	3850	4.81	170	155	0.622	52	-20 to +70	60000/60°C
127×127×38 mm	109E1324S101	Aluminum	24	20.4 to 27.6	0.53	12.7	3450	4.37	154	125	0.502	49	-20 to +70	60000/60°C
127×127×38 mm	109E1348G101	Aluminum	48	40.8 to 55.2	0.54	25.9	4550	5.66	200	216	0.867	57	-20 to +60	40000/60°C
127×127×38 mm	109E1348A101	Aluminum	48	40.8 to 55.2	0.36	17.3	3850	4.81	170	155	0.622	52	-20 to +70	60000/60°C
127×127×38 mm	109E1348S101	Aluminum	48	40.8 to 55.2	0.28	13.4	3450	4.37	154	125	0.502	49	-20 to +70	60000/60°C
Ø172×150×51 mm	9GV5724H501	Aluminum	24	20.4 to 27.6	4.0	96	6300	11.32	400	690	2.77	74	-20 to +70	40000/60°C
Ø172×150×51 mm	9GV5748H501	Aluminum	48	40.8 to 55.2	2.0	96	6300	11.32	400	690	2.77	74	-20 to +70	40000/60°C
Ø200×70 mm	109E2024S001	Aluminum	24	21.6 to 26.4	1.9	45.6	3200	10.45	369	287.1	1.153	57	-10 to +70	40000
Ø200×70 mm	109E2024H001	Aluminum	24	20.4 to 27.6	1.0	24	2600	8.2	289.5	192	0.771	51	-10 to +70	40000
Ø200×70 mm	109E2024AS001	Aluminum	24	21.6 to 26.4	1.9	45.6	3200	10.45	369	287.1	1.153	57	-10 to +70	40000
					1.45	34.8	2800	9	317.8	215.6	0.865	54		
Ø200×70 mm	109E2024MH001	Aluminum	24	20.4 to 27.6	1.0	24	2600	8.2	289.5	192	0.771	51	-10 to +70	40000
					0.63	15.12	2100	6.7	236.6	115.4	0.463	45		

Size	Model no.	Frame material	Rated voltage [V]	Operating voltage range [V]	PWM duty cycle* [%]	Rated current [A]	Rated input [W]	Rated speed [min⁻¹]	Max. airflow [m³/min]	Max. airflow [CFM]	Max. static pressure [Pa]	Max. static pressure [inchH₂O]	SPL [dB (A)]	Operating temperature [°C]	Expected life [h]
80×80×25 mm	9GA0812P4H001	Plastics	12	10.8 to 13.2	100	0.22	2.64	5200	1.46	51.5	87.7	0.35	37	-20 to +70	60000/60°C
					25	0.06	0.72	1600	0.44	15.5	8.3	0.03	17		
80×80×25 mm	9GA0824P4H001	Plastics	24	21.6 to 26.4	100	0.1	2.4	5200	1.46	51.5	87.7	0.35	37	-20 to +70	60000/60°C
					25	0.02	0.48	1500	0.42	14.8	7.2	0.02	17		
80×80×38 mm	9GV0812P1F03	Plastics	12	10.2 to 13.8	100	1.5	18	8000	3.05	108.0	301.0	1.21	58	-20 to +70	40000/60°C
					0	0.12	1.44	2400	0.92	32.0	27.1	0.11	26		
80×80×38 mm	9GV0812P1M03	Plastics	12	10.2 to 13.8	100	0.75	9	6000	2.29	81.0	169.0	0.68	51	-20 to +70	40000/60°C
					0	0.09	1.08	1700	0.65	23.0	13.6	0.05	19		

* PWM frequency: 25 kHz

Splash Proof Fan

Size	Model no.	Frame material	Rated voltage [V]	Operating voltage range [V]	Rated current [A]	Rated input [W]	Rated speed [min⁻¹]	Max. airflow [m³/min]	Max. airflow [CFM]	Max. static pressure [Pa]	Max. static pressure [inchH₂O]	SPL [dB (A)]	Operating temperature [°C]	Expected life [h]
80×80×25 mm	9WS0812H401	Plastics	12	10.2 to 13.8	0.16	1.92	3100	0.94	33.2	45.1	0.181	32	-20 to +70	40000/60°C
80×80×25 mm	9WS0812F401	Plastics	12	10.2 to 13.8	0.13	1.56	2700	0.83	29.3	34.3	0.138	28	-20 to +70	40000/60°C
80×80×25 mm	9WS0812M401	Plastics	12	10.2 to 13.8	0.1	1.2	2200	0.65	23.0	23.5	0.094	23	-20 to +70	40000/60°C
80×80×25 mm	9WS0824H401	Plastics	24	20.4 to 27.6	0.09	2.16	3100	0.94	33.2	45.1	0.181	32	-20 to +70	40000/60°C
80×80×25 mm	9WS0824F401	Plastics	24	20.4 to 27.6	0.07	1.68	2700	0.83	29.3	34.3	0.138	28	-20 to +70	40000/60°C
80×80×25 mm	9WS0824M401	Plastics	24	20.4 to 27.6	0.05	1.2	2200	0.65	23.0	23.5	0.094	23	-20 to +70	40000/60°C
92×92×25 mm	9WS0912H401	Plastics	12	10.2 to 13.8	0.17	2.04	2850	1.38	48.7	45.1	0.181	33	-20 to +70	40000/60°C
92×92×25 mm	9WS0912F401	Plastics	12	10.2 to 13.8	0.13	1.56	2450	1.18	41.7	32.3	0.13	30	-20 to +70	40000/60°C
92×92×25 mm	9WS0912M401	Plastics	12	10.2 to 13.8	0.1	1.2	2100	1.01	35.7	23.5	0.094	27	-20 to +70	40000/60°C
92×92×25 mm	9WS0912L401	Plastics	12	10.2 to 13.8	0.06	0.72	1700	0.8	28.2	16.7	0.067	23	-20 to +70	40000/60°C
92×92×25 mm	9WS0924H401	Plastics	24	20.4 to 27.6	0.1	2.4	2850	1.38	48.7	45.1	0.181	33	-20 to +70	40000/60°C
92×92×25 mm	9WS0924F401	Plastics	24	20.4 to 27.6	0.07	1.68	2450	1.18	41.7	32.3	0.13	30	-20 to +70	40000/60°C
92×92×25 mm	9WS0924M401	Plastics	24	20.4 to 27.6	0.06	1.44	2100	1.01	35.7	23.5	0.094	27	-20 to +70	40000/60°C
92×92×25 mm	9WS0924L401	Plastics	24	20.4 to 27.6	0.05	1.2	1700	0.8	28.2	16.7	0.067	23	-20 to +70	40000/60°C

Note: Storage temperature is -30 to +70°C.

Splash Proof Centrifugal Fan

Size	Model no.	Frame material	Rated voltage [V]	Operating voltage range [V]	PWM duty cycle* [%]	Rated current [A]	Rated input [W]	Rated speed [min⁻¹]	Max. airflow [m³/min]	Max. airflow [CFM]	Max. static pressure [Pa]	Max. static pressure [inchH₂O]	SPL [dB (A)]	Operating temperature [°C]	Expected life [h]
Ø100×25 mm	9W1TM48P4G01	Aluminum	48	36 to 60	100	0.36	17.28	7400	2.03	71.7	708	2.84	65	-20 to +70	40000/60°C
Ø100×25 mm	9W1TM48P4H01	Aluminum	48	36 to 60	100	0.22	10.56	6400	1.77	62.5	560	2.25	60	-20 to +70	40000/60°C
					0	0.04	1.92	2000	0.51	18.0	48	0.19	34		
Ø133×91 mm	9W1TJ24P0H61	Aluminum	24	20.4 to 27.6	100	1.2	28.8	4150	6.39	225.0	395	1.59	61	-20 to +70	40000/60°C
Ø133×91 mm	9W1TJ48P0H61	Aluminum	48	36 to 60	100	0.55	26.4	4150	6.39	225.0	395	1.59	61	-20 to +70	40000/60°C
Ø150×35 mm	9W1TN48P1H01	Aluminum	48	36.0 to 55.2	100	0.32	15.4	3800	3.83	135.0	390	1.57	59	-20 to +70	40000/60°C

* PWM frequency: 25 kHz

Long Life Fan

Size	Model no.	Frame material	Rated voltage [V]	Operating voltage range [V]	Rated current [A]	Rated input [W]	Rated speed [min⁻¹]	Max. airflow [m³/min]	Max. airflow [CFM]	Max. static pressure [Pa]	Max. static pressure [inchH₂O]	SPL [dB (A)]	Operating temperature [°C]	Expected life [h]
120×120×38 mm	9GL1212G101	Aluminum	12	10.2 to 13.8	0.98	11.8	3600	3.88	137	135	0.542	49	-20 to +70	80000/60°C
120×120×38 mm	9GL1212E101	Aluminum	12	10.2 to 13.8	0.61	7.32	3100	3.34	118	100	0.402	46	-20 to +70	80000/60°C
120×120×38 mm	9GL1212H101	Aluminum	12	7 to 13.8	0.38	4.56	2600	2.8	99	70.4	0.283	39	-20 to +70	100000/60°C
120×120×38 mm	9GL1212F101	Aluminum	12	7 to 13.8	0.28	3.36	2280	2.45	87	54.2	0.218	36	-20 to +70	100000/60°C
120×120×38 mm	9GL1212M101	Aluminum	12	7 to 13.8	0.21	2.52	1950	2.1	74	39.6	0.159	32	-20 to +70	100000/60°C
120×120×38 mm	9GL1224G101	Aluminum	24	20.4 to 27.6	0.5	12.0	3600	3.88	137	135	0.542	49	-20 to +70	80000/60°C
120×120×38 mm	9GL1224E101	Aluminum	24	20.4 to 27.6	0.34	8.16	3100	3.34	118	100	0.402	46	-20 to +70	80000/60°C
120×120×38 mm	9GL1224H101	Aluminum	24	14 to 27.6	0.22	5.28	2600	2.8	99	70.4	0.283	39	-20 to +70	100000/60°C
120×120×38 mm	9GL1224F101	Aluminum	24	14 to 27.6	0.16	3.84	2280	2.45	87	54.2	0.218	36	-20 to +70	100000/60°C
120×120×38 mm	9GL1224M101	Aluminum	24	14 to 27.6	0.11	2.64	1950	2.1	74	39.6	0.159	32	-20 to +70	100000/60°C
120×120×38 mm	9GL1248G101	Aluminum	48	40.8 to 55.2	0.25	12.0	3600	3.88	137	135	0.542	49	-20 to +70	80000/60°C
120×120×38 mm	9GL1248E101	Aluminum	48	40.8 to 55.2	0.17	8.16	3100	3.34	118	100	0.402	46	-20 to +70	80000/60°C
120×120×38 mm	9GL1248H101	Aluminum	48	40.8 to 55.2	0.11	5.28	2600	2.8	99	70.4	0.283	39	-20 to +70	100000/60°C
120×120×38 mm	9GL1248F101	Aluminum	48	40.8 to 55.2	0.09	4.32	2280	2.45	87	54.2	0.218	36	-20 to +70	100000/60°C
120×120×38 mm	9GL1248M101	Aluminum	48	40.8 to 55.2	0.07	3.36	1950	2.1	74	39.6	0.159	32	-20 to +70	100000/60°C

Finger Guard

Size	Mounting side	Model no.	Surface treatment	Mass (g)
52 mm sq. type	Outlet side	109-149	Nickel-chrome plating (silver)	7
80 mm sq. type	Outlet side	109-049C	Nickel-chrome plating (silver)	17
92 mm sq. type	Outlet side	109-099C	Nickel-chrome plating (silver)	22
120 mm sq. type	Outlet side	109-019C	Nickel-chrome plating (silver)	32
		109-019H	Cation electropainting (black)	
127 mm sq. type	Outlet side	109-723	Nickel-chrome plating (silver)	34
150 mm sq. type	Outlet side	109-1052	Nickel-chrome plating (silver)	53
160 mm sq. type	Outlet side	109-620	Nickel-chrome plating (silver)	74
Ø172 mm Sidecut, Round type	Outlet side	109-320	Nickel-chrome plating (silver)	53
Ø172 mm Round type	Outlet side	109-1068	Nickel-chrome plating (silver)	54
Ø200 mm type	Outlet side	109-1103	Nickel-chrome plating (silver)	80
		109-1103H	Cation electropainting (black)	
		109-721	Nickel-chrome plating (silver)	66
		109-721H	Cation electropainting (black)	

Note: Storage temperature is -30 to +70˚C.

List of Group Companies and Offices

Head Office

SANYO DENKI CO., LTD.
3-33-1 Minami-Otsuka, Toshima-ku, Tokyo, 170-8451, Japan
TEL: +81 3 5927 1020

East Asia

SANYO DENKI SHANGHAI CO., LTD.
Room 2106-2110, Bldg A, Far East International Plaza, No.319, Xianxia Road, Shanghai, 200051, China
TEL: +86 21 6235 1107

SANYO DENKI (Shenzhen) CO.,LTD
04B-07, 11F, AVIC Center, No.1018 Huafu Road, Futian District, Shenzhen, 518031, China
TEL: +86 755 3337 3868

SANYO DENKI (Chengdu) CO., LTD.
Room2105B, Block A, Times Plaza, 2 Zongfu Road, Jinjiang District, Chengdu, 610016, Sichuan, China
TEL: +86 28 8661 6901

SANYO DENKI (Tianjin) CO., LTD.
Room AB 16th Floor TEDA Building, No. 256 Jie Fang Nan Road, Hexi District, Tianjin 300042 China
TEL: +86 22 2320 1186

Beijing Branch
Room1807, Gaohe Lanfeng Buliding, No.98 East Third Ring South Road, Chaoyang District, Beijing 100122 China
TEL: +86 10 5861 1508

SANYO DENKI (H.K.) CO., LIMITED
Room 1603, 16/F, South Tower, Concordia Plaza, 1 Science Museum Road, TST East, Kowloon, Hong Kong
TEL: +852 2312 6250

SANYO DENKI TAIWAN CO., LTD.
N-711, 7F, Chia Hsin 2nd Bldg., No.96, Sec.2, Zhongshan N. Rd., Taipei 10449, Taiwan
TEL: +886 2 2511 3938

SANYO DENKI KOREA CO., LTD.
8F, 39, Sejong-daero, Jung-gu, Seoul, 04513, Korea
TEL: +82 2 773 5623

Busan Branch
8F, CJ Korea Express Building, 119, Daegyo-ro, Jung-gu, Busan, 48943, Korea
TEL: +82 51 796 5151

Southeast Asia

SANYO DENKI (THAILAND) CO., LTD.
388 Exchange Tower, 25th Floor, Unit 2501-1, Sukhumvit Road, Klongtoey, Klongtoey, Bangkok 10110 Thailand
TEL: +66 2261 8670

SANYO DENKI INDIA PRIVATE LIMITED
#14 (Old No.6/3), Avenue Road, Nungambakkam, Chennai - 600034, Tamil Nadu, India
TEL: +91 44 4203 8472

SANYO DENKI CO., LTD.
Singapore Branch
988 Toa Payoh North, #04-08, Singapore 319002
TEL: +65 6223 1071

Jakarta Representative Office
Summitmas II 4th Floor, Jl. Jend. Sudirman Kav.61-62, Jakarta 12190, Indonesia
TEL: + 62 21 252 3202

North America

SANYO DENKI AMERICA, INC.
468 Amapola Avenue Torrance, CA 90501, U.S.A.
TEL: +1 310 783 5400

Europe

SANYO DENKI EUROPE S.A.
11 rue Ferdinand de Lesseps 95190 Goussainville, France
TEL: +33 1 48 63 26 61

Poland Branch
ul. Wodociagowa 56 30-205 Kraków, Polska
TEL: +48 12 427 30 73

SANYO DENKI GERMANY GmbH
Frankfurter Strasse 80-82, 65760 Eschborn, Germany
TEL: +49 6196 76113 0

Munich Branch
Klausnerring 17, 85551 Kirchheim-Heimstetten, Germany
TEL: +49 6196 76 11 3 35

Distributors

For the most updated information, see our website.
https://www.sanyodenki.com/contacts/distributor/index.html

Delivered Fast and On-Time!

Short Lead Time Service

DC Fan

ACDC Fan

ACDC Fan Set Models

The service applicable products are indicated by the » mark in individual product pages and model number index pages.
The service is applicable to all ACDC Fan set models.

AC Fan

AC Fan Set Models

The service is applicable to all AC Fan models (including set orders) and all fan options.

Option

- Finger guards
- Inlet nozzle
- EMC guards
- Resin finger guards
- Resin filter kits
- Replacement filter
- Filter kits
- Screen kits
- Plug cord

Please contact your point of sale for details.

■ Ideal fan sizes selected for various control panels, automated machines, and power supply units.
■ You can purchase everything necessary in one order without the need for searching for the fan peripherals. It makes fan replacements easy.
■ Delivered in one package, it simplifies storage and maintenance.

Set configuration items

Fan
+
Finger guards
+
Plug cord
+
Screws
(with flat washer and spring washer)
+
Hex nuts
+
Instruction manual

Instruction Manual is available for download on the webpage accessible via URL or QR code below and on the product package.

https://products.sanyodenki.com/en/manual/sanace/fan-Instruction/

One order includes everything needed for operation.

*Package image

Plug cords are compliant with Electrical Appliances and Materials Safety Act (Japan), but not UL/CSA certified.

■Eco Products

ECO PRODUCTS

Eco Products are eco-friendly products designed to reduce the environmental impact of the product and its packaging materials compared to conventional products on the market.
Our products are assessed over the product's life cycle against our own eco-design requirements including product size, weight, power consumption, and CO_2 emissions, and those meeting our standards and higher standards qualify as Eco Products and Eco Products Plus, respectively.

https://www.sanyodenki.com/

SANYO DENKI CO., LTD.
3-33-1 Minami-Otsuka, Toshima-ku, Tokyo 170-8451, Japan
TEL: +81 3 5927 1020

Singapore Branch
988 Toa Payoh North, #04-08, Singapore 319002
TEL: +65 6223 1071

Jakarta Representative Office
Summitmas II 4th Floor, Jl. Jend. Sudirman Kav.61-62, Jakarta 12190, Indonesia
TEL: + 62 21 252 3202

SANYO DENKI EUROPE S.A.
11 rue Ferdinand de Lesseps 95190 Goussainville, France
TEL: +33 1 48 63 26 61

Poland Branch
ul. Wodociągowa 56 30-205 Kraków, Polska
TEL: +48 12 427 30 73

SANYO DENKI AMERICA, INC.
468 Amapola Avenue Torrance, CA 90501, U.S.A.
TEL: +1 310 783 5400

SANYO DENKI SHANGHAI CO., LTD.
Room 2106-2110, Bldg A, Far East International Plaza, No.319, Xianxia Road, Shanghai, 200051, China
TEL: +86 21 6235 1107

SANYO DENKI (H.K.) CO., LIMITED
Room 1603, 16/F, South Tower, Concordia Plaza, 1 Science Museum Road, TST East, Kowloon, Hong Kong
TEL: +852 2312 6250

SANYO DENKI TAIWAN CO., LTD.
N-711, 7F, Chia Hsin 2nd Bldg., No.96, Sec.2, Zhongshan N. Rd., Taipei 10449, Taiwan
TEL: +886 2 2511 3938

SANYO DENKI GERMANY GmbH
Frankfurter Strasse 80-82, 65760 Eschborn, Germany
TEL: +49 6196 76113 0

Munich Branch
Klausnerring 17, 85551 Kirchheim-Heimstetten, Germany
TEL: +49 6196 76 11 3 35

SANYO DENKI KOREA CO., LTD.
8F, 39, Sejong-daero, Jung-gu, Seoul, 04513, Korea
TEL: +82 2 773 5623

Busan Branch
8F, CJ Korea Express Building, 119, Daegyo-ro, Jung-gu, Busan, 48943, Korea
TEL: +82 51 796 5151

SANYO DENKI (Shenzhen) CO., LTD.
04B-07, 11F, AVIC Center, No.1018 Huafu Road, Futian District, Shenzhen, 518031, China
TEL: +86 755 3337 3868

SANYO DENKI (Chengdu) CO., LTD.
Room2105B, Block A, Times Plaza, 2 Zongfu Road, Jinjiang District, Chengdu, 610016, Sichuan, China
TEL: +86 28 8661 6901

SANYO DENKI (THAILAND) CO., LTD.
388 Exchange Tower, 25th Floor, Unit 2501-1, Sukhumvit Road, Klongtoey, Klongtoey, Bangkok 10110 Thailand
TEL: +66 2261 8670

SANYO DENKI INDIA PRIVATE LIMITED
#14 (Old No.6/3), Avenue Road, Nungambakkam, Chennai - 600034, Tamil Nadu, India
TEL: +91 44 4203 8472

SANYO DENKI (Tianjin) CO., LTD.
Room AB 16th Floor TEDA Building, No. 256 Jie Fang Nan Road, Hexi District, Tianjin 300042 China
TEL: +86 22 2320 1186

Beijing Branch
Room1807, Gaohe Lanfeng Buliding, No.98 East Third Ring South Road, Chaoyang District, Beijing 100122 China
TEL: +86 10 5861 1508

The names of companies and/or their products specified in this document are the trade names, and/or trademarks and/or registered trademarks of such respective companies.
San Ace, SANUPS, and SANMOTION are registered trademarks of SANYO DENKI CO., LTD.
Specifications are subject to change without notice.

CATALOG No. C1143B001 '24.6.IT

Errata sheet for San Ace Cooling Fan Catalog 2024-2025

This sheet lists the errors found in the catalog and corresponding corrections. We sincerely apologize for any inconvenience.

Affected Products

Page	Size (mm)	
170	120 × 120 × 38	DC Fan San Ace 120 9SX type
194	Ø172 × 150 × 51	DC Fan San Ace 172 9SG type
213	40 × 40 × 56	Counter Rotating Fan San Ace 40 9CRJ type
264	40 × 40 × 28	Splash Proof Fan San Ace 40W 9WL type
270	60 × 60 × 25	Splash Proof Fan San Ace 60W 9WL type
276	80 × 80 × 25	Splash Proof Fan San Ace 80W 9WL type
285	92 × 92 × 25	Splash Proof Fan San Ace 92W 9WL type
289	92 × 92 × 38	Splash Proof Fan San Ace 92W 9WL type
294	120 × 120 × 38	Splash Proof Fan San Ace 120W 9WV type
297	120 × 120 × 38	Splash Proof Fan San Ace 120W 9WG type
303	140 × 140 × 38	Splash Proof Fan San Ace 140W 9WL type
308	140 × 140 × 51	Splash Proof Fan San Ace 140W 9WL type
313	Ø172 × 150 × 51	Splash Proof Fan San Ace 172W 9WG type
316	Ø100 × 25	Splash Proof Centrifugal Fan San Ace 100W 9W2TM type
319	Ø133 × 91	Splash Proof Centrifugal Fan San Ace 133W 9W2TJ type
322	Ø150 × 35	Splash Proof Centrifugal Fan San Ace 150W 9W2TN type
325	Ø175 × 69	Splash Proof Centrifugal Fan San Ace 175W 9W2TGA type
330	Ø221 × 71	Splash Proof Centrifugal Fan San Ace 221W 9W2TP type
333	Ø225 × 99	Splash Proof Centrifugal Fan San Ace 225W 9W2TS type
335	270 × 270 × 99	Splash Proof Centrifugal Fan San Ace 221W 9B1W2TP type
338	270 × 270 × 119	Splash Proof Centrifugal Fan San Ace 225W 9B1W2TS type

Page	Size (mm)	
342	97 × 33	Splash Proof Blower San Ace 97W 9W1BM type
438	Ø70 × 20	Centrifugal Fan San Ace C70 9TD type
440	Ø100 × 25	Centrifugal Fan San Ace C100 9TM type
443	Ø133 × 91	Centrifugal Fan San Ace C133 9TJ type
445	Ø150 × 35	Centrifugal Fan San Ace C150 9TN type
447	Ø175 × 69	Centrifugal Fan San Ace C175 9TGA type
450	Ø175 × 69	Centrifugal Fan San Ace C175 9TG type
453	Ø221 × 71	Centrifugal Fan San Ace C221 9TP type
456	Ø225 × 99	Centrifugal Fan San Ace C225 9TS type
505	160 × 160 × 51	ACDC Fan San Ace 160AD 9AD type
508	160 × 160 × 51	ACDC Fan San Ace 160AD 9ADW type
511	Ø172 × 150 × 51	ACDC Fan San Ace 172AD 9AD type
514	Ø172 × 150 × 51	ACDC Fan San Ace 172AD 9ADW type
517	Ø190 × 88	ACDC Fan San Ace 190AD 9ADTU type
520	Ø190 × 88	ACDC Fan San Ace 190AD 9ADW1TU type
523	Ø225 × 99	ACDC Fan San Ace 225AD 9ADTS type
526	Ø225 × 99	ACDC Fan San Ace 225AD 9ADW1TS type
529	Ø250 × 99	ACDC Fan San Ace 250AD 9ADTV type
532	Ø250 × 99	ACDC Fan San Ace 250AD 9ADW1TV type
535	270 × 270 × 119	ACDC Fan San Ace 225AD 9ADB1TS type
538	270 × 270 × 119	ACDC Fan San Ace 225AD 9ADB1W1TS type

Specifications

For models with a pulse sensor and PWM control

Incorrect:

The models listed below **have ribs and a pulse sensor with PWM control.**

Model no.	Rated voltage [V]	Operating voltage range [V]	PWM duty cycle* [%]	Rated current [A]	Rated input [W]	Rated speed [min^{-1}]

Correct:

The models listed below **have a pulse sensor with PWM control.**

Model no.	Rated voltage [V]	Operating voltage range [V]	PWM duty cycle* [%]	Rated current [A]	Rated input [W]	Rated speed [min^{-1}]

For models with a pulse sensor

Incorrect:

The models listed below **have ribs and a pulse sensor.**

Model no.	Rated voltage [V]	Operating voltage range [V]	PWM duty cycle* [%]	Rated current [A]	Rated input [W]	Rated speed [min^{-1}]

Correct:

The models listed below **have a pulse sensor.**

Model no.	Rated voltage [V]	Operating voltage range [V]	PWM duty cycle* [%]	Rated current [A]	Rated input [W]	Rated speed [min^{-1}]

For models with no sensor

Incorrect:

The models listed below **have ribs and no sensor.**

Model no.	Rated voltage [V]	Operating voltage range [V]	PWM duty cycle* [%]	Rated current [A]	Rated input [W]	Rated speed [min^{-1}]

Correct:

The models listed below **have no sensor.**

Model no.	Rated voltage [V]	Operating voltage range [V]	PWM duty cycle* [%]	Rated current [A]	Rated input [W]	Rated speed [min^{-1}]

For models with a low-speed sensor

Incorrect:

The models listed below **have ribs and a low-speed sensor.**

Model no.	Rated voltage [V]	Operating voltage range [V]	PWM duty cycle* [%]	Rated current [A]	Rated input [W]	Rated speed [min^{-1}]

Correct:

The models listed below **have a low-speed sensor.**

Model no.	Rated voltage [V]	Operating voltage range [V]	PWM duty cycle* [%]	Rated current [A]	Rated input [W]	Rated speed [min^{-1}]

Errata sheet for San Ace Cooling Fan Catalog 2024-2025

This sheet lists the errors found in the catalog and corresponding corrections. We sincerely apologize for any inconvenience.

p. 493 120 × 120 × 25 mm San Ace 120AD 9AD type

Specifications

The models listed below **have ribs and a pulse sensor with PWM control.** For models without ribs, append "1" to the end of model numbers.

Model no.	Rated voltage [V]	Operating voltage range [V]	Frequency [Hz]	PWM duty cycle* [%]	Rated current [A]	Rated input [W]	Rated speed [min^{-1}]	Max. airflow [m^3/min]	Max. airflow [CFM]	Max. static pressure [Pa]	Max. static pressure [inchH_2O]	SPL [dB (A)]	Operating temperature [°C]	Expected life [h]
9AD1201P4H001	100 to 240	90 to 264	50/60	100	0.06	3.4	3000	2.35	83	62	0.249	40	-20 to +70	60000/60°C (90000/40°C)
				30	0.02	0.7	900	0.7	24.7	6.6	0.03	14		

*PWM frequency is 25 kHz. Models without ratings for 0% PWM duty cycle have zero speed at 0%. When control terminal is open, speed is the same as at 100% duty cycle.

Incorrect: 100%
Correct: 0%

SANYO DENKI CO., LTD.
CATALOG No.C1143B001 '24.6.IT

Looking for pricing, stock, or lifecycle information?

Click below to explore more details on WIN SOURCE:

- View 109P0424H6D01 on WIN SOURCE
- Sanyo Denki America Inc. Information

Optimize Your Supply Chain with WIN SOURCE Solutions

- Global Sourcing Solution
- Obsolete Management
- Cost Control Management
- Shortage Management
- Alternative Solution
- Excess Inventory Management