THE DATASHEET OF

EE-SX1041

www.win-source.net 0086-755-83957316

Photomicrosensor (Transmissive)
EE-SX1041

⚠ **Be sure to read *Precautions* on page 25.**

■ Dimensions

Note: All units are in millimeters unless otherwise indicated.

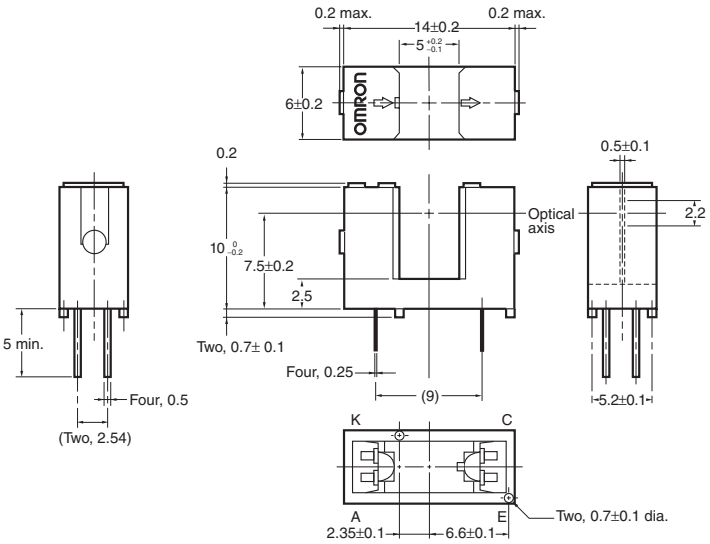

Internal Circuit

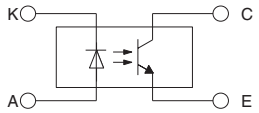

Terminal No.	Name
A	Anode
K	Cathode
C	Collector
E	Emitter

Unless otherwise specified, the tolerances are as shown below.

Dimensions	Tolerance
3 mm max.	±0.3
3 < mm ≤ 6	±0.375
6 < mm ≤ 10	±0.45
10 < mm ≤ 18	±0.55
18 < mm ≤ 30	±0.65

■ Features

- General-purpose model with a 5-mm-wide slot.
- PCB mounting type.
- High resolution with a 0.5-mm-wide aperture.

■ Absolute Maximum Ratings (Ta = 25°C)

Item		Symbol	Rated value
Emitter	**Forward current**	I_F	50 mA (see note 1)
	Pulse forward current	I_{FP}	1 A (see note 2)
	Reverse voltage	V_R	4 V
Detector	**Collector–Emitter voltage**	V_{CEO}	30 V
	Emitter–Collector voltage	V_{ECO}	---
	Collector current	I_C	20 mA
	Collector dissipation	P_C	100 mW (see note 1)
Ambient temperature	**Operating**	Topr	–25°C to 95°C
	Storage	Tstg	–30°C to 100°C
Soldering temperature		Tsol	260°C (see note 3)

Note: 1. Refer to the temperature rating chart if the ambient temperature exceeds 25°C.
2. The pulse width is 10 μs maximum with a frequency of 100 Hz.
3. Complete soldering within 10 seconds.

■ Electrical and Optical Characteristics (Ta = 25°C)

Item		Symbol	Value	Condition
Emitter	**Forward voltage**	V_F	1.2 V typ., 1.5 V max.	I_F = 30 mA
	Reverse current	I_R	0.01 μA typ., 10 μA max.	V_R = 4 V
	Peak emission wavelength	λ_P	940 nm typ.	I_F = 20 mA
Detector	**Light current**	I_L	0.5 mA min., 14 mA max.	I_F = 20 mA, V_{CE} = 10 V
	Dark current	I_D	2 nA typ., 200 nA max.	V_{CE} = 10 V, 0 ℓx
	Leakage current	I_{LEAK}	---	---
	Collector–Emitter saturated voltage	V_{CE} (sat)	0.1 V typ., 0.4 V max.	I_F = 20 mA, I_L = 0.1 mA
	Peak spectral sensitivity wavelength	λ_P	850 nm typ.	V_{CE} = 10 V
Rising time		tr	4 μs typ.	V_{CC} = 5 V, R_L = 100 Ω, I_L = 5 mA
Falling time		tf	4 μs typ.	V_{CC} = 5 V, R_L = 100 Ω, I_L = 5 mA

■ Engineering Data

Forward Current vs. Collector Dissipation Temperature Rating

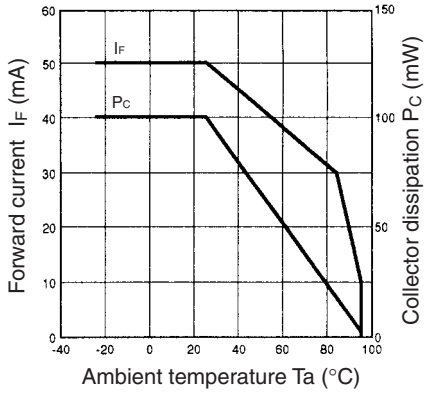

Forward Current vs. Forward Voltage Characteristics (Typical)

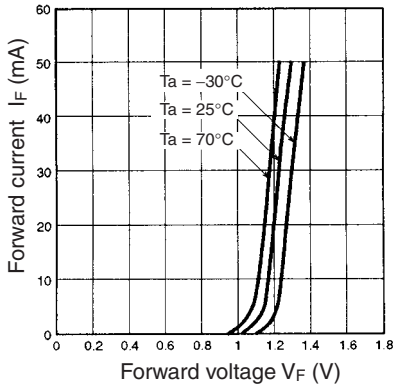

Light Current vs. Forward Current Characteristics (Typical)

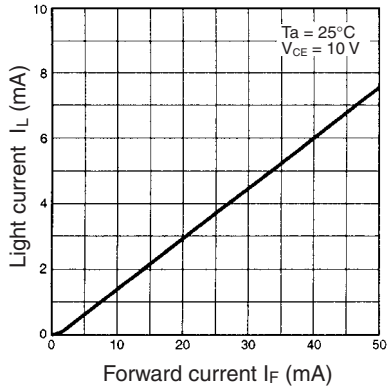

Light Current vs. Collector–Emitter Voltage Characteristics (Typical)

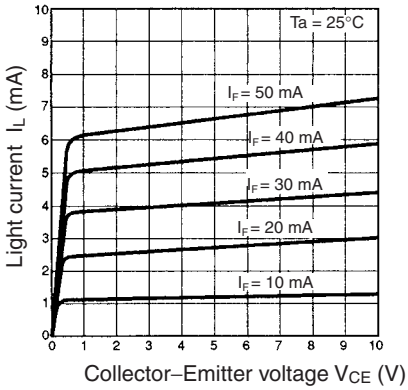

Relative Light Current vs. Ambient Temperature Characteristics (Typical)

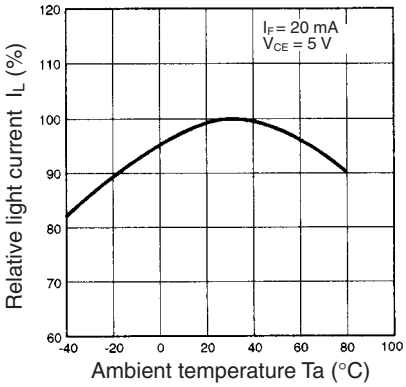

Dark Current vs. Ambient Temperature Characteristics (Typical)

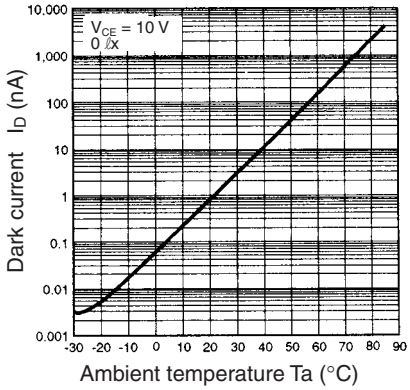

Response Time vs. Load Resistance Characteristics (Typical)

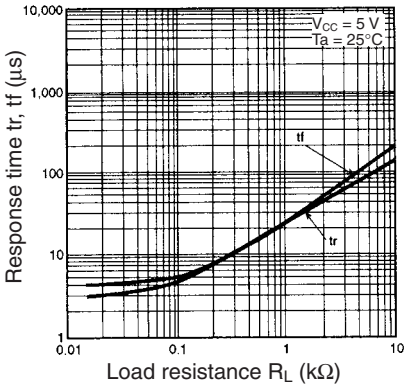

Sensing Position Characteristics (Typical)

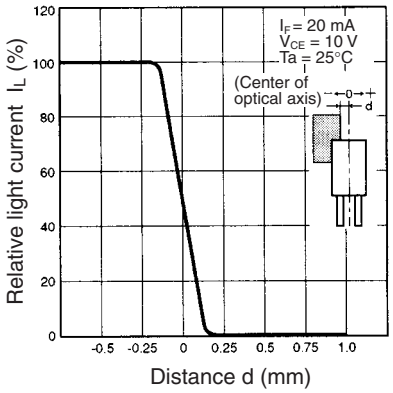

Sensing Position Characteristics (Typical)

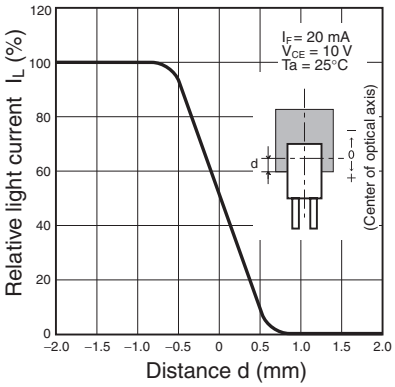

Response Time Measurement Circuit

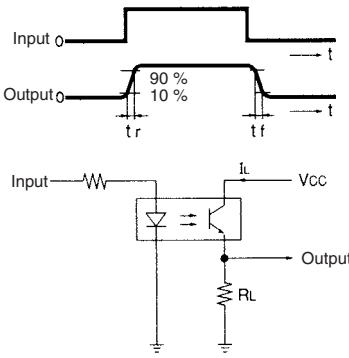

Looking for pricing, stock, or lifecycle information?

Click below to explore more details on WIN SOURCE:

- View EE-SX1041 on WIN SOURCE
- Omron Information

Optimize Your Supply Chain with WIN SOURCE Solutions

- Global Sourcing Solution
- Obsolete Management
- Cost Control Management
- Shortage Management
- Alternative Solution
- Excess Inventory Management