THE DATASHEET OF

5-175474-6

www.win-source.net 0086-755-83957316

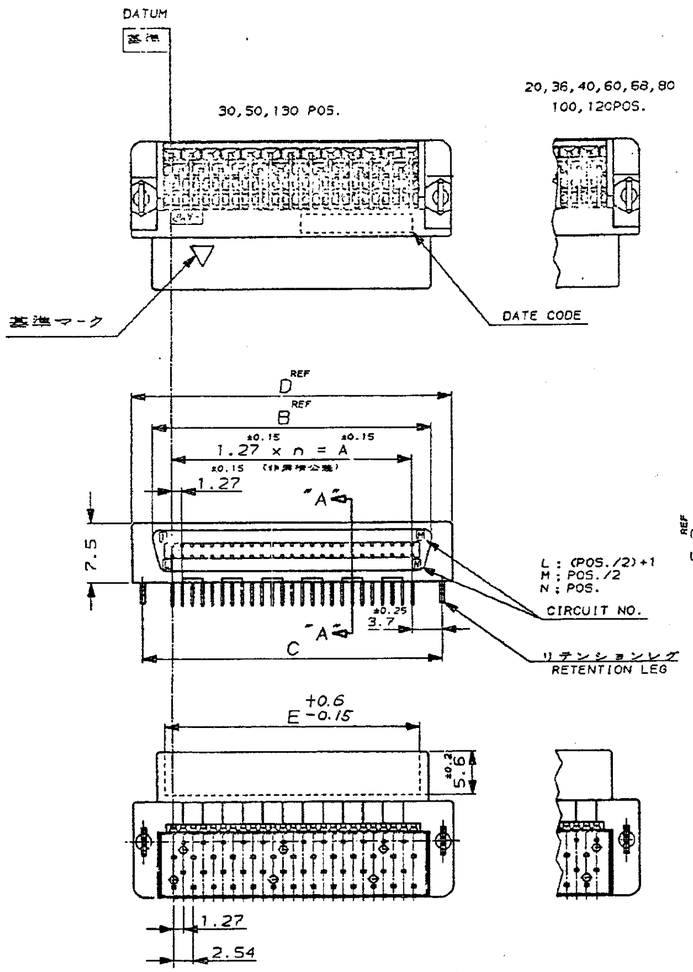

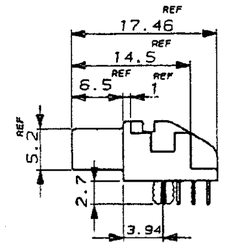

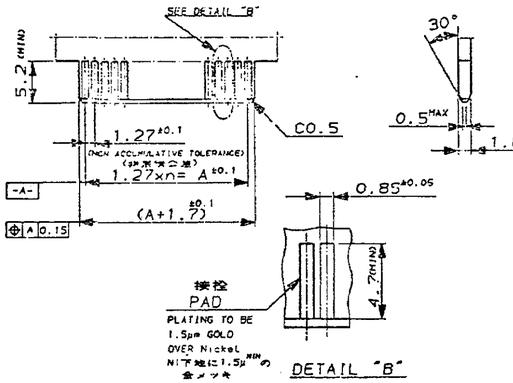

RECOMMENDED P.C BOARD DIMMENSIONS.

推奨基板寸法 △4
（嵌合用）

注記：

1. 基板及びコネクタの n 数は、 基準 位置から数える。
（-AMPマーク側が回路番号1番となる。）

△2 材料：※ハウジング：ガラス入り66ナイロン
(UL 94V-0) 色、黒。
※コンタクト：燐青銅。
※リテンションレグ：黄銅。

△3 表面仕上げ：
※コンタクト：全面1.3μ以上のニッケル下地メッキ
に接触部金メッキ（表参照）脚部1μ以上の半田
メッキ
※リテンションレグ：1.3μ以上のニッケル下地メッキ
に2μ以上の半田メッキ。

△4 カードエッジコネクタとして使用する場合、かん合用基板
の厚さは、1.6 +0.15 -0.1 であること。

NOTE

1. NUMBER "n" IS COUNTED FROM DATUM
(CIRCUIT NO.1 IS "AMP" MARK SIDE.)

△2 MATERIAL; HOUSING; 66 NYLON (GF) UL 94V-0, BLACK.
; CONTACT, PHOSPHOR BRONZE.
; RETENTION LEG; BRASS.

△3 FINISH: CONTACT; Au AT CONTACT AREA (SEE TABLE), TIN LEAD AT TINE
OVER Ni.
RETENTION LEG; TIN LEAD UNDER Ni.

△4 P.C.BOARD THK MUST BE 1.6 +0.15 -0.1 FOR CARD EDGE CONNECTOR

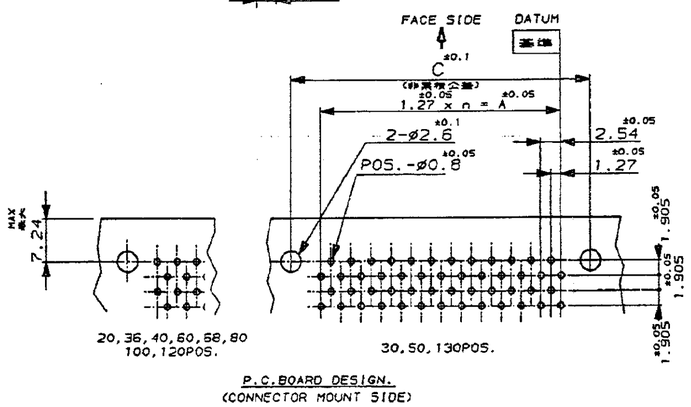

P.C.BOARD DESIGN.
(CONNECTOR MOUNT SIDE)

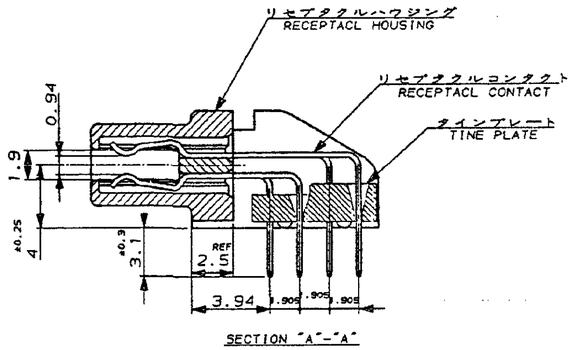

型番	金めっき厚	極数	n	A	B	C	D	E
6-	-2	130	64	81.28	86.82	88.68	92.48	83.18
6-	-1	120	59	74.93	80.47	82.33	86.13	76.83
6-	-0	100	49	62.23	67.77	69.63	73.43	64.13
5-	-9	80	39	49.53	55.07	56.93	60.73	51.43
5-	-8	68	33	41.91	47.45	49.31	53.11	43.81
5-	-7	60	29	36.83	42.37	44.23	48.03	38.73
5-	-6	50	24	30.48	36.02	37.88	41.68	32.38
5-	-5	40	19	24.13	29.67	31.53	35.33	26.03
5-	-3	30	14	17.78	23.32	25.18	28.98	19.68
5-	-1	0.76μ	20	9	11.43	16.97	18.83	22.63	13.33
4-	-2	130	64	81.28	86.82	88.68	92.48	83.18
4-	-1	120	59	74.93	80.47	82.33	86.13	76.83
4-	-0	100	49	62.23	67.77	69.63	73.43	64.13
3-	-9	80	39	49.53	55.07	56.93	60.73	51.43
3-	-8	68	33	41.91	47.45	49.31	53.11	43.81
3-	-7	60	29	36.83	42.37	44.23	48.03	38.73
3-	-6	50	24	30.48	36.02	37.88	41.68	32.38
3-	-5	40	19	24.13	29.67	31.53	35.33	26.03
3-	-3	30	14	17.78	23.32	25.18	28.98	19.68
3-	-1	0.5μ	20	9	11.43	16.97	18.83	22.63	13.33
1-	-2	130	64	81.28	86.82	88.68	92.48	83.18
1-	-1	120	59	74.93	80.47	82.33	86.13	76.83
1-	-0	100	49	62.23	67.77	69.63	73.43	64.13
	-9	80	39	49.53	55.07	56.93	60.73	51.43
	-8	68	33	41.91	47.45	49.31	53.11	43.81
	-7	60	29	36.83	42.37	44.23	48.03	38.73
	-6	50	24	30.48	36.02	37.88	41.68	32.38
	-5	40	19	24.13	29.67	31.53	35.33	26.03
	-4	36	17	21.59	27.13	28.99	32.79	23.49
	-3	30	14	17.78	23.32	25.18	28.98	19.68
175474-1	0.2μ	20	9	11.43	16.97	18.83	22.63	13.33

LTR	REVISION RECORD	DR	CHK	DATE
E	REVISED FJ00-1313-01	T.K	J.F	7-Feb-96
D	REVISED ECN FJ00-1045-93	T.N	Y.F	7-Feb-96
C	REVISED ECN J-1583	T.N	Y.F	10-Oct-92
B	REVISED ECN J-12511	T.N	Y.F	2-Feb-90
A	REVISED ECN J-12103	H.K	Y.F	29-Sep-89
0	RELEASED ECN J-10812	S.I	Y.F	8-Aug-89

PRODUCT SPECIFICATION 108-5290

WIRE RANGE: mm² (AWG -)
INSULATION DIA: mm
MATERIAL: △2
FINISH: △3
DR. S.Ishikawa 13/Oct./'89
DE.
CHK. Y.Fujiura 25/Sep/'89
APP. R.Nishimura 3/Oct/'89

AMP | TycoElectronics AMP K.K. Kawasaki, Japan

NAME: AMP CHAMP.050 CONNECTOR (B-T-B)
RECEPTACL CONNECTOR (HORIZONTAL WITH RETENTION LEG)

GENERAL TOLERANCE: 0<x≤6 10 ; ±0.2 / 10<x≤ 30 ; ±0.25 / 30<x≤100 ; ±0.3 / ANGLES ; ±3°

SIZE: C | LOC: J | NUMBER: C-175474 | SCALE | REV. E | SHEET 1 OF 1

CUSTOMER DRAWING

C-175474 | 12.MAR.91 | 3rd ANGLE PROJECTION | METRIC | FILE 3.M | DIMENSIONS IN MILLIMETERS, DO NOT SCALE PRINT | PRINT DIST | AMP-J REV 10/'89

Looking for pricing, stock, or lifecycle information?

Click below to explore more details on WIN SOURCE:

- View 5-175474-6 on WIN SOURCE
- TE Connectivity Information

Optimize Your Supply Chain with WIN SOURCE Solutions

- Global Sourcing Solution
- Obsolete Management
- Cost Control Management
- Shortage Management
- Alternative Solution
- Excess Inventory Management