THE DATASHEET OF

DS92LV222ATMX

www.win-source.net 0086-755-83957316

DS92LV222A

DS92LV222A Two Channel Bus LVDS MUXed Repeater

Literature Number: SNLS009A

National Semiconductor

May 1998

DS92LV222A
Two Channel Bus LVDS MUXed Repeater

General Description

The DS92LV222A is a repeater designed specifically for the bridging of multiple backplanes in a rack. The DS92LV222A utilizes low voltage differential signaling to deliver high speed while consuming minimal power with reduced EMI. The RSEL pin and DE pins allow maximum flexibility as to which receiver/driver are used. The DS92LV222A repeats signals between backplanes and accepts or drives signals onto the local bus. It also features a flow through pin out which allows easy PCB routing for short stubs between its pins and the connector.

The driver is selectable between 3.5 mA (100Ω load) and 8.5 mA (27Ω load) output loop currents depending upon the level applied to the ISEL pin. This allows for single termination (point-to-point) and also double termination (multipoint) applications while maintain similar differential levels.

The receiver threshold is ±100 mV, while providing ±1V common mode range.

Features

- Bus LVDS Signaling (BLVDS)
- Designed for Double Termination Applications
- Low power CMOS design
- High Signaling Rate Capability (above 100 Mbps)
- Ultra Low Power Dissipation (13.2 mW quiescent)
- Balanced Output Impedance
- Lite Bus Loading 5 pF typical
- Selectable Drive Capability (3.5 mA or 8.5 mA)
- 3.3V operation
- ±1V Common Mode Range
- ±100 mV Receiver Sensitivity
- Available in 16 pin SOIC package.

Connection Diagram

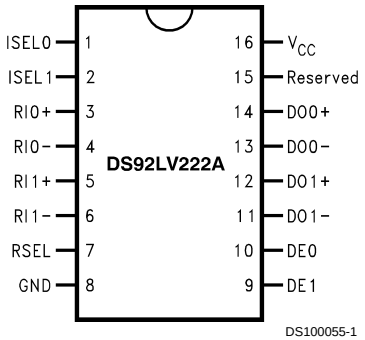

Order Number DS92LV222ATM
See NS Package Number M16A

Block Diagram

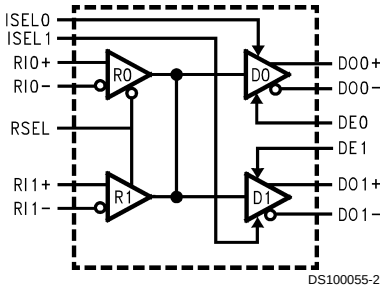

TRI-STATE® is a registered trademark of National Semiconductor Corporation.

© 2000 National Semiconductor Corporation

Absolute Maximum Ratings (Notes 1, 2)

If Military/Aerospace specified devices are required, please contact the National Semiconductor Sales Office/ Distributors for availability and specifications.

Supply Voltage (V_{CC})	6.0V
Enable Input Voltage (DE)	−0.3V to (V_{CC} + 0.3V)
Current Select Voltage (ISEL)	−0.3V to (V_{CC} + 0.3V)
Receiver Select Voltage (RSEL)	−0.3V to (V_{CC} + 0.3V)
Bus Pin Voltage (DO/RI±)	−0.3V to +3.9V
Driver Short Circuit Current	Continuous
ESD (HBM 1.5 kΩ, 100 pF)	>2 kV
Maximum Package Power Dissipation at 25˚C	
SOIC	970 mW
Derate SOIC Package above 25˚C	8mW/˚C
Storage Temperature Range	−65˚C to +150˚C
Lead Temperature (Soldering, 4 sec.)	260˚C

Recommended Operating Conditions

	Min	Max	Units
Supply Voltage (V_{CC})	3.0	3.6	V
Receiver Input Voltage	0.0	2.9	V
Operating Free Air Temperature	−40	+85	˚C

DC Electrical Characteristics

T_A = −40˚C to +85˚C unless otherwise noted, V_{CC} = 3.3V ± 0.3V (Notes 2, 3)

Symbol	Parameter	Conditions	Pin	Min	Typ	Max	Units
DIFFERENTIAL DRIVER CHARACTERISTICS							
V_{OD}	Output Differential Voltage	R_L = 27Ω *Figure 1* Isel = 0V	DO+, DO−	170	220	280	mV
ΔV_{OD}	VOD Magnitude Change				2	10	mV
V_{OS}	Offset Voltage			1.0	1.25	1.6	V
ΔV_{OS}	Offset Magnitude Change				10	20	mV
V_{OD}	Output Differential Voltage	R_L = 100Ω *Figure 1* Isel = 3.3V		250	360	480	mV
ΔV_{OD}	VOD Magnitude Change				2	10	mV
V_{OS}	Offset Voltage			0.9	1.25	1.6	V
ΔV_{OS}	Offset Magnitude Change				10	20	mV
I_{OZD}	TRI-STATE ® Leakage	V_O = V_{CC} or GND, DE = 0			±1	±10	µA
I_{OXD}	Power-Off Leakage	V_O = 2.9V or GND, V_{CC} = 0V			±1	±10	µA
I_{OSD}	Output Short Circuit Current	ISEL = V_{CC} V_O = 0V			−11	−13	mA
DIFFERENTIAL RECEIVER CHARACTERISTICS							
V_{TH}	Input Threshold High		RI+, RI−			+100	mV
V_{TL}	Input Threshold Low			−100			mV
I_{IN}	Input Current	V_{IN} = +2.9V, or 0V, V_{CC} = 3.6 V or 0 V		−10	±1	+10	µA
DEVICE CHARACTERISTICS							
V_{IH}	Minimum Input High Voltage		DE0, DE1, RSEL, ISEL0, ISEL1	2.0		V_{CC}	V
V_{IL}	Maximum Input Low Voltage			GND		0.8	V
I_{IH}	Input High Current	V_{IN} = V_{CC} or 2.4V			±1	±10	µA
I_{IL}	Input Low Current	V_{IN} = GND or 0.4V			±1	±10	µA
V_{CL}	Input Diode Clamp Voltage	I_{CLAMP} = −18 mA		−1.5	−0.8		V

DC Electrical Characteristics (Continued)

T_A = −40˚C to +85˚C unless otherwise noted, V_{CC} = 3.3V ± 0.3V (Notes 2, 3)

Symbol	Parameter	Conditions	Pin	Min	Typ	Max	Units
DEVICE CHARACTERISTICS							
I_{CCD}	Power Supply Current	No Load; DE = RSEL = V_{CC} Isel = 0 V	V_{CC}		25	45	mA
		R_L = 27Ω; DE = RSEL = V_{CC} Isel = 0 V			24	40	mA
I_{CCZ}		DE = 0V; RSEL = V_{CC}			4	8	mA
C_{input}	Capacitance at		RO+/RO-		5		pF
C_{output}	Capacitance at		DO+/DO-		5		pF

Note 1: "Absolute Maximum Ratings" are these beyond which the safety of the device cannot be guaranteed. They are not meant to imply that the device should be operated at these limits. The table of "Electrical Characteristics" provides conditions for actual device operation.

Note 2: All currents into device pins are positive; all currents out of device pins are negative. All voltages are referenced to device ground unless otherwise specified.

Note 3: All typicals are given for V_{CC} = +3.3V and T_A = +25˚C, unless otherwise stated.

Note 4: ESD Rating: HBM (1.5 kΩ, 100 pF) > 2 kV EIAJ (0Ω, 200 pF) > 200V

Note 5: CL includes probe and fixture capacitance.

Note 6: Generator waveforms for all tests unless otherwise specified: f = 1MHz, ZO = 50Ω, t_f = < 6.0 ns (0%–100%).

Note 7: The DS92LV222A is a current mode device and only functions datasheet specifications when a resistive load is applied to the drivers outputs.

Note 8: During receiver select transition(s), data must be held in a steady state 15 ns before and 15 ns after the RSEL pin changes state.

Note 9: Channel-to-channel skew is the measurement between outputs of D0 and D1.

AC Electrical Characteristics

T_A = −40˚C to +85˚C, V_{CC} = 3.3V ± 0.3V (Note 6)

Symbol	Parameter	Conditions	Min	Typ	Max	Units
t_{TLH}	Transition Time Low to High	R_L = 27Ω *Figures 2, 3* C_L = 10 pF *Figures 2, 3*	0.15	0.4	2.0	ns
t_{THL}	Transition Time High to Low		0.15	0.4	2.0	ns
t_{PHZ}	Disable Time High to Z	R_L = 27Ω *Figures 4, 5* C_L = 10 pF *Figures 4, 5*	2.0	6.0	9.0	ns
t_{PLZ}	Disable Time Low to Z		2.0	6.0	9.0	ns
t_{PZH}	Enable Time Z to High		2.0	6.0	9.0	ns
t_{PZL}	Enable Time Z to Low		2.0	6.0	9.0	ns
DIFFERENTIAL RECEIVER TO DRIVER TIMING REQUIREMENTS						
t_{PHL_RD}	Differential Prop. Delay High to Low	R_L = 27Ω *Figures 2, 3* C_L = 10 pF *Figures 2, 3*	3.0	7.7	13	ns
t_{PLH_RD}	Differential Prop. Delay Low to High		3.0	8.0	13	ns
t_{SK_RD}	Pulse SKEW $\lvert t_{PHL} - t_{PLH} \rvert$		0	0.3	2.0	ns
t_{PHL_RS0}	Prop. Delay High to Low	RSEL to Driver Outputs R_L = 27Ω *Figures 6, 7* C_L = 10 pF (Note 8)	2.0	7.5	13	ns
t_{PLH_RS1}	Prop. Delay Low to High		2.0	8.0	13	ns
$t_{PHL_R_0 D_x}$	Channel-to-Channel Skew R_0 to D_x	R_L = 27Ω C_L = 10 pF (Note 9)		0.3	0.8	ns
$t_{PLH_R_0 D_x}$	Channel-to-Channel Skew R_0 to D_x			0.3	0.8	ns
$t_{PHL_R_1 D_x}$	Channel-to-Channel Skew R_1 to D_x			0.3	0.8	ns
$t_{PLH_R_1 D_x}$	Channel-to-Channel Skew R_1 to D_x			0.3	0.8	ns

Test Circuits and Timing Waveforms

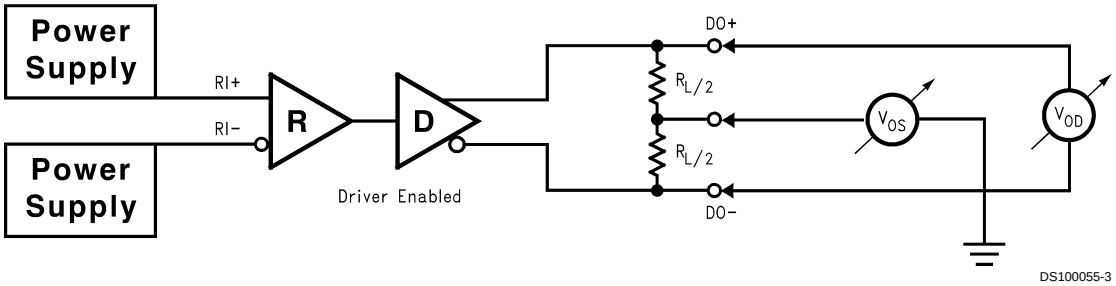

FIGURE 1. Differential Driver DC Test Circuit

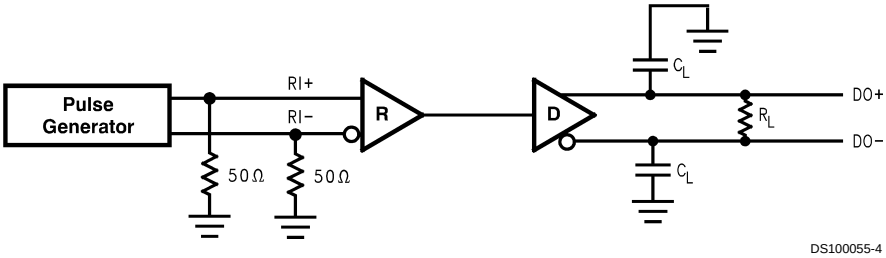

FIGURE 2. Differential Receiver to Driver Propagation Delay and Driver Transition Time Test Circuit

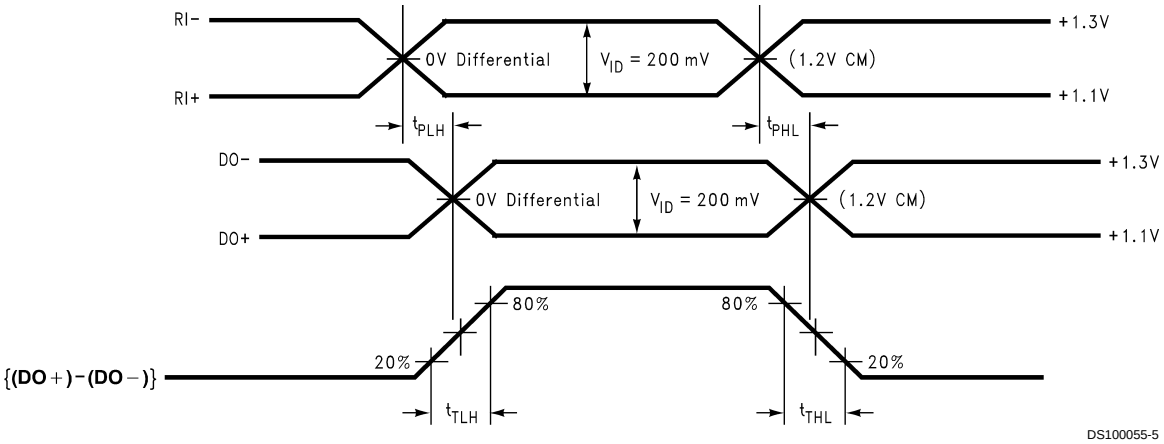

FIGURE 3. Differential Receiver to Driver Propagation Delay and Driver Transition Time Waveforms

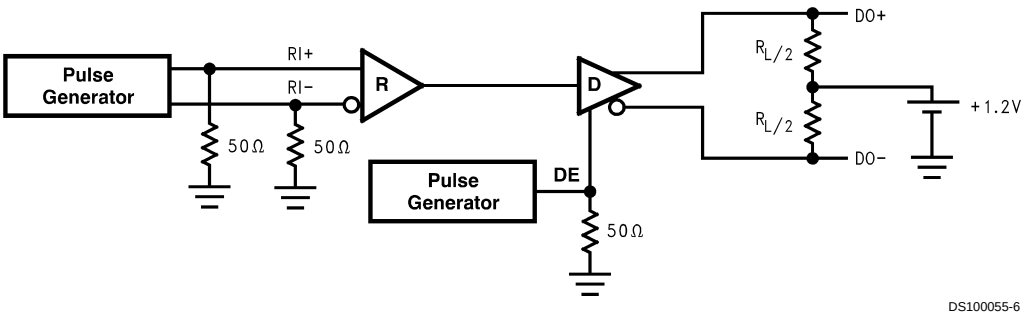

FIGURE 4. Driver TRI-STATE Delay Test Circuit

Test Circuits and Timing Waveforms (Continued)

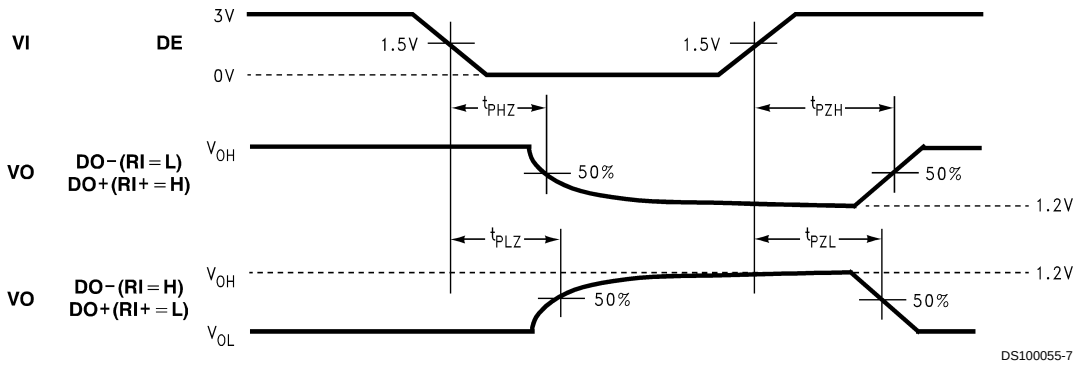

FIGURE 5. Driver TRI-STATE Delay Waveforms

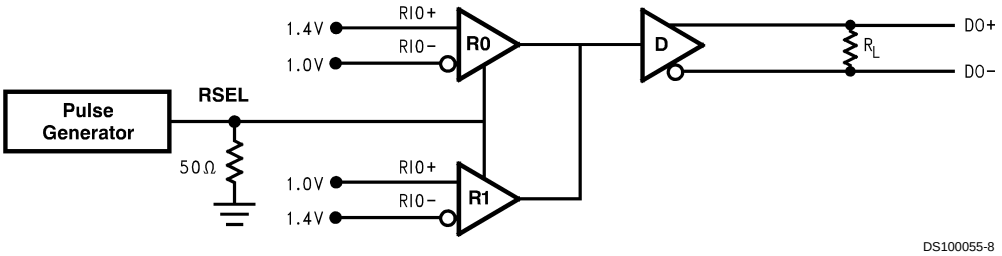

FIGURE 6. Receiver Select to Driver Propagation Delay Test Circuit

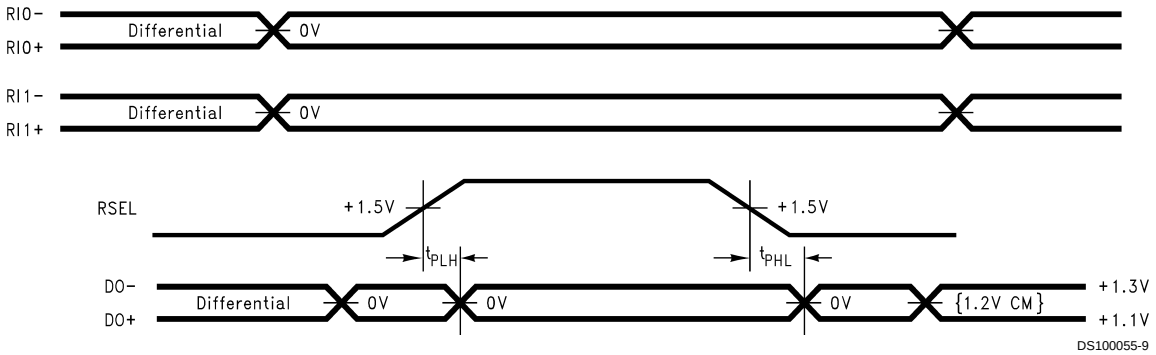

FIGURE 7. Receiver Select to Driver Propagation Delay Waveforms

Pin Description

Pin Name	Number of Pins	Input/ Output	Description
RI±	4	I	Bus LVDS Receiver Inputs
DO±	4	O	Bus LVDS Driver Outputs
RSEL	1	I	Receiver Select TTL Input, (see Truth Tables)
DE	2	I	Driver Enable TTL Input, Active High
ISEL	2	I	IOL Control Pin (Select High = 3.5 mA (100Ω Load), Select Low = 8.5mA (27Ω Load))
GND	1	NA	Ground Reference
V_{CC}	1	NA	Power Supply
Reserved	1	NA	Reserved Pin

Function Select Table

MODE SELECTED	DE0	DE1	RSEL
Receiver Zero ON, Driver Zero ON, Driver One OFF	H	L	L
Receiver Zero ON, Driver Zero OFF, Driver One ON	L	H	L
Receiver One ON, Driver Zero ON, Driver One OFF	H	L	H
Receiver One ON, Driver Zero OFF, Driver One ON	L	H	H
Receiver Zero ON, Driver Zero ON, Driver One ON	H	H	L
Receiver One ON, Driver Zero ON, Driver One ON	H	H	H
Driver Zero and Driver One TRI-STATE	L	L	X

Truth Table for Receiver Zero

INPUTS			OUTPUTS	
DE0	RSEL	(RI0+)−(RI0−)	DO+	DO−
H	L	L	L	H
H	L	H	H	L
H	L	100 mV > & > −100 mV	X	X
L	X	X	Z	Z

X = High or low logic state
Z = High impedance state
L = Low state

Truth Table for Receiver One

INPUTS			OUTPUTS	
DE1	RSEL	(RI1+)−(RI1−)	DO+	DO−
H	H	L	L	H
H	H	H	H	L
H	H	100 mV > & > −100 mV	X	X
L	X	X	Z	Z

X = High or low logic state
Z = High impedance state
L = Low state

Truth Table for Current Drive

Driver	Current Drive	ISEL0	ISEL1
Driver 0	3.5 mA	H	X
Driver 0	8.5 mA	L	X
Driver 1	3.5 mA	X	H
Driver 1	8.5 mA	X	L

Applications Information

There are few common practices which should be employed when designing PCB for Bus LVDS signaling. Recommended practices are:

- Use at least 4 PCB board layer (Bus LVDS signals, ground, power and TTL signals).
- Keep drivers and receivers as close to the (Bus LVDS port side) connector as possible.
- Bypass each Bus LVDS device and also use distributed bulk capacitance. Surface mount capacitors placed close to power and ground pins work best. Two or three multilayer ceramic (MLC) surface mount capacitors (0.1µ and 0.01 µF in parallel should be used between each V_{CC} and ground. The capacitors should be as close as possible to the V_{CC} pin.
- Use controlled impedance traces which match the differential impedance of your transmission medium (i.e., Cable) and termination resistor.
- Use the termination resistor which best matches the differential impedance of your transmission line.
- Leave unused Bus LVDS receiver inputs open (floating).
- Isolate TTL signals from Bus LVDS signals.

MEDIA (CABLE, CONNECTOR OR BACKPLANE) SELECTION:

- Use controlled impedance media. The cables and connectors should have a matched differential impedance.
- Balanced cables (e.g., twisted pair) are usually better than unbalanced cables (ribbon cable, simple coax) for noise reduction and signal quality.
-
- There are different types of failsafe situations to consider, these are Open Input, Terminated Input, and other special cases. The first, Open input failsafe occurs when only one receiver is being used (R0 for example). The unused receiver (R1) inputs should be left open for noise minimization. The second case is for terminated inputs. This occurs when the inputs have a low impedance (typically 100 Ohm) termination (R_T) across them, and the cable is unplugged. For this case, and if the output state needs to maintain a known state, two external bias resistors may be used to provide a strong common mode bias point. For this a 10K Ohm pull up and pull down resistor may be used to set the output high. Note that R_1 and R_2 should be much larger (2 orders of magnitude) compared to R_T to minimize loading effects to the Bus LVDS driver when it is active.

Applications Information (Continued)

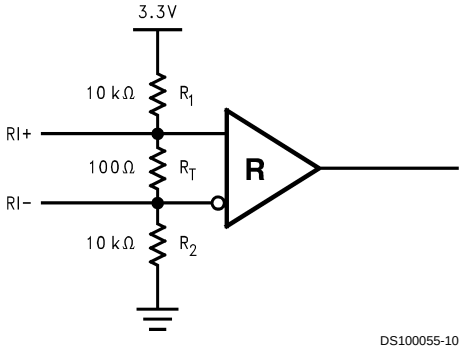

FIGURE 8. Terminated Input Failsafe Circuit

Physical Dimensions inches (millimeters) unless otherwise noted

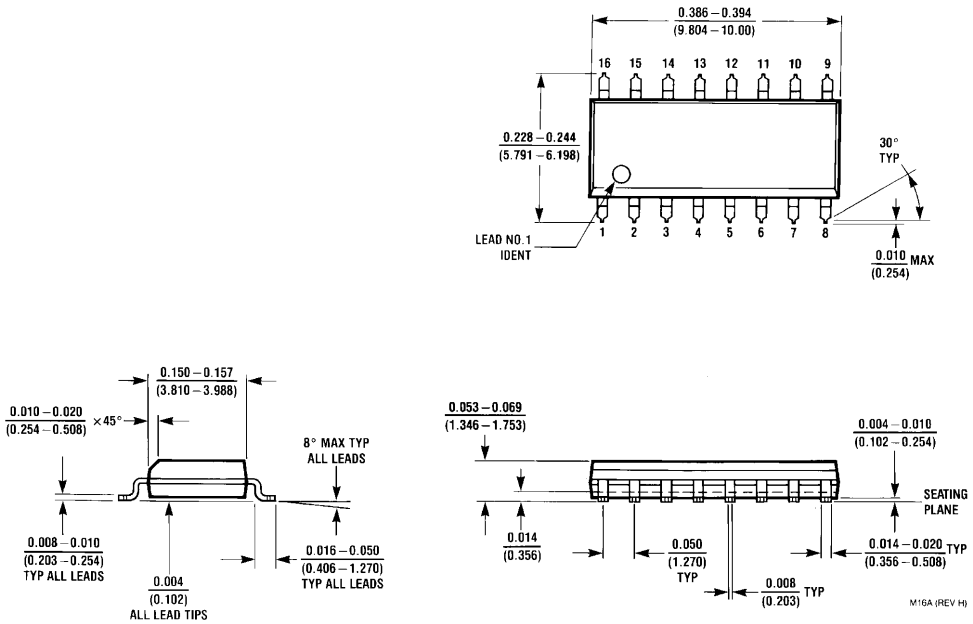

Order Number DS92LV222ATM
NS Package Number M16A

LIFE SUPPORT POLICY

NATIONAL'S PRODUCTS ARE NOT AUTHORIZED FOR USE AS CRITICAL COMPONENTS IN LIFE SUPPORT DEVICES OR SYSTEMS WITHOUT THE EXPRESS WRITTEN APPROVAL OF THE PRESIDENT AND GENERAL COUNSEL OF NATIONAL SEMICONDUCTOR CORPORATION. As used herein:

1. Life support devices or systems are devices or systems which, (a) are intended for surgical implant into the body, or (b) support or sustain life, and whose failure to perform when properly used in accordance with instructions for use provided in the labeling, can be reasonably expected to result in a significant injury to the user.
2. A critical component is any component of a life support device or system whose failure to perform can be reasonably expected to cause the failure of the life support device or system, or to affect its safety or effectiveness.

National Semiconductor Corporation
Americas
Tel: 1-800-272-9959
Fax: 1-800-737-7018
Email: support@nsc.com
www.national.com

National Semiconductor Europe
Fax: +49 (0) 180-530 85 86
Email: europe.support@nsc.com
Deutsch Tel: +49 (0) 69 9508 6208
English Tel: +44 (0) 870 24 0 2171
Français Tel: +33 (0) 1 41 91 8790

National Semiconductor Asia Pacific Customer Response Group
Tel: 65-2544466
Fax: 65-2504466
Email: ap.support@nsc.com

National Semiconductor Japan Ltd.
Tel: 81-3-5639-7560
Fax: 81-3-5639-7507

National does not assume any responsibility for use of any circuitry described, no circuit patent licenses are implied and National reserves the right at any time without notice to change said circuitry and specifications.

IMPORTANT NOTICE

Texas Instruments Incorporated and its subsidiaries (TI) reserve the right to make corrections, modifications, enhancements, improvements, and other changes to its products and services at any time and to discontinue any product or service without notice. Customers should obtain the latest relevant information before placing orders and should verify that such information is current and complete. All products are sold subject to TI's terms and conditions of sale supplied at the time of order acknowledgment.

TI warrants performance of its hardware products to the specifications applicable at the time of sale in accordance with TI's standard warranty. Testing and other quality control techniques are used to the extent TI deems necessary to support this warranty. Except where mandated by government requirements, testing of all parameters of each product is not necessarily performed.

TI assumes no liability for applications assistance or customer product design. Customers are responsible for their products and applications using TI components. To minimize the risks associated with customer products and applications, customers should provide adequate design and operating safeguards.

TI does not warrant or represent that any license, either express or implied, is granted under any TI patent right, copyright, mask work right, or other TI intellectual property right relating to any combination, machine, or process in which TI products or services are used. Information published by TI regarding third-party products or services does not constitute a license from TI to use such products or services or a warranty or endorsement thereof. Use of such information may require a license from a third party under the patents or other intellectual property of the third party, or a license from TI under the patents or other intellectual property of TI.

Reproduction of TI information in TI data books or data sheets is permissible only if reproduction is without alteration and is accompanied by all associated warranties, conditions, limitations, and notices. Reproduction of this information with alteration is an unfair and deceptive business practice. TI is not responsible or liable for such altered documentation. Information of third parties may be subject to additional restrictions.

Resale of TI products or services with statements different from or beyond the parameters stated by TI for that product or service voids all express and any implied warranties for the associated TI product or service and is an unfair and deceptive business practice. TI is not responsible or liable for any such statements.

TI products are not authorized for use in safety-critical applications (such as life support) where a failure of the TI product would reasonably be expected to cause severe personal injury or death, unless officers of the parties have executed an agreement specifically governing such use. Buyers represent that they have all necessary expertise in the safety and regulatory ramifications of their applications, and acknowledge and agree that they are solely responsible for all legal, regulatory and safety-related requirements concerning their products and any use of TI products in such safety-critical applications, notwithstanding any applications-related information or support that may be provided by TI. Further, Buyers must fully indemnify TI and its representatives against any damages arising out of the use of TI products in such safety-critical applications.

TI products are neither designed nor intended for use in military/aerospace applications or environments unless the TI products are specifically designated by TI as military-grade or "enhanced plastic." Only products designated by TI as military-grade meet military specifications. Buyers acknowledge and agree that any such use of TI products which TI has not designated as military-grade is solely at the Buyer's risk, and that they are solely responsible for compliance with all legal and regulatory requirements in connection with such use.

TI products are neither designed nor intended for use in automotive applications or environments unless the specific TI products are designated by TI as compliant with ISO/TS 16949 requirements. Buyers acknowledge and agree that, if they use any non-designated products in automotive applications, TI will not be responsible for any failure to meet such requirements.

Following are URLs where you can obtain information on other Texas Instruments products and application solutions:

Products		**Applications**	
Audio	www.ti.com/audio	Communications and Telecom	www.ti.com/communications
Amplifiers	amplifier.ti.com	Computers and Peripherals	www.ti.com/computers
Data Converters	dataconverter.ti.com	Consumer Electronics	www.ti.com/consumer-apps
DLP® Products	www.dlp.com	Energy and Lighting	www.ti.com/energy
DSP	dsp.ti.com	Industrial	www.ti.com/industrial
Clocks and Timers	www.ti.com/clocks	Medical	www.ti.com/medical
Interface	interface.ti.com	Security	www.ti.com/security
Logic	logic.ti.com	Space, Avionics and Defense	www.ti.com/space-avionics-defense
Power Mgmt	power.ti.com	Transportation and Automotive	www.ti.com/automotive
Microcontrollers	microcontroller.ti.com	Video and Imaging	www.ti.com/video
RFID	www.ti-rfid.com		
OMAP Mobile Processors	www.ti.com/omap		
Wireless Connectivity	www.ti.com/wirelessconnectivity		

TI E2E Community Home Page e2e.ti.com

Mailing Address: Texas Instruments, Post Office Box 655303, Dallas, Texas 75265
Copyright © 2011, Texas Instruments Incorporated

Looking for pricing, stock, or lifecycle information?

Click below to explore more details on WIN SOURCE:

- View DS92LV222ATMX on WIN SOURCE
- Texas Instruments Information

Optimize Your Supply Chain with WIN SOURCE Solutions

- Global Sourcing Solution
- Obsolete Management
- Cost Control Management
- Shortage Management
- Alternative Solution
- Excess Inventory Management